STV224XH/228XH/223XH

I²C BUS-CONTROLLED MULTISTANDARD SINGLE CHIP TV PROCESSOR

- I²C Bus Control
- PIF Circuit with PLL Demodulation (Positive and Negative Video)
- SIF Circuit with QSS Structure, FM Demodulation and AM Demodulation for France
- Intercarrier Capability
- Built-in Sound Bandpass
- Sound Subcarrier Output for Stereo Chassis (FM, NICAM)
- Audio FM wide mode
- Audio Switch and Volume Control (Mono Chassis)
- AVL (Automatic Volume Levelling)
- Integrated Chroma Filters and Luma Delay Line
- Integrated Chroma Delay Line
- Video Switch (3 CVBS In, 2 CVBS Out)
- SVHS Switch (Y Combined with CVBS3 Input)
- OSD RGB Inputs
- External RGB/YCrCb Inputs or YUV Interface
- PAL / SECAM / NTSC Chroma Demodulators
- Auto Flesh Control Capability in NTSC mode
- South America Capability (PAL-M / PAL-N / NTSC)
- Chroma Subcarrier Output
- Black Stretch Circuit
- Peaking Circuit
- Automatic Cut-off Current Loop
- Manual Cut-off possible for low-cost applications
- Two Horizontal Deflection PLLs
- Vertical Countdown
- Half Contrast
- APR (Automatic RGB Peak Regulation) or RGB Peak Limitation Function
- White Insertion
- Copy Protection mode
- Wide Line Blanking mode
- SAW Filter Switch Control (TQFP64 package only)
- Very Few External Components

www.DataSheet4U.com

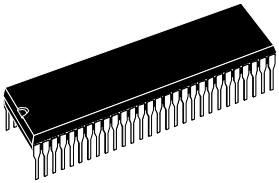

SHRINK56
(Plastic Package)

ORDER CODE: STV224XH/8XH

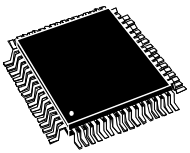

TQFP64 (14 x 14 x 1.4 mm)
(Full Thin Plastic Quad Flat Pack)

ORDER CODE: STV223XH

www.DataSheet4U.com

1 GENERAL DESCRIPTION 6
1.1 INTRODUCTION 6
1.2 PIN DESCRIPTION 6
2 MAIN FEATURES 19
3 FUNCTIONAL DESCRIPTION 20
3.1 DETAILED FEATURES 20
3.1.1 Power Supplies 20
3.1.2 Picture Intermediate Frequency (PIF) 20
3.1.3 Sound Intermediate Frequency (SIF) and Sound Demodulators 20
3.1.4 Audio Switch 20
3.1.5 Surface Acoustic Wave (SAW) Filter Switch Control 20
3.1.6 Video Switches 20
3.2 DEFLECTION PART 21
3.2.1 Synchronization Separator 21
3.2.2 Two Phase-Locked Loops (PLL) 21
3.2.3 Video Identification 21
3.2.4 Vertical Synchronization 21
3.2.5 Vertical Blanking 21
3.2.6 Vertical Oversize Blanking 21
3.2.7 Vertical Output 22
3.2.8 Vertical Control 22
3.2.9 Horizontal Output 22
3.2.10 Horizontal Control 22
3.2.11 Combined Line Flyback / Super-Sandcastle 22
3.2.12 Line Blanking 22
3.2.13 Copy Protection Mode 22
3.3 FILTERS 22
3.3.1 **Integrated Trap Filter 22**
3.3.2 **Integrated Chroma Bandpass 22**
3.3.3 **Integrated Bell Filter for SECAM 22**
3.3.4 **Integrated Luma Delay Line 23**
3.3.5 **Filter Tuning 23**
3.4 VIDEO CIRCUIT 23
3.4.1 RGB Inputs 23
3.4.2 YCrCb Mode 23
3.4.3 Half-Contrast Control 23
3.4.4 YUV to RGB Matrix 23
3.4.5 Automatic Cut-off Current Loop 23
3.4.6 Warm-up Detector 23
3.4.7 Beam Current Limiter DC Voltage Input 23
3.4.8 Drive (RGB gain) and DC Adjustment 23
3.4.9 Bus-controlled Contrast & Saturation 24
3.4.10 Bus-controlled Brightness & Sharpness 24
3.4.11 Bus-controlled Coring on Sharpness 24
3.4.12 Black Stretch 24
3.4.13 Bus-controlled Blue Screen 24
3.4.14 White Insertion 24
3.4.15 Automatic RGB Peak Regulation (APR) 24

www.DataSheet4U.com

www.DataSheet4U.com

3.4.16 RGB Peak Limitation . . . 24
3.5 CHROMA CIRCUIT . . . 24
3.5.1 **PAL/SECAM/NTSC Decoders** . . . **24**
3.5.2 **PAL/NTSC Decoder** . . . **24**
3.5.3 **SECAM Decoder** . . . **25**
3.5.4 Chroma Standard Identification . . . 25
4 ELECTRICAL CHARACTERISTICS . . . **26**
4.1 ABSOLUTE MAXIMUM RATINGS . . . 26
4.2 THERMAL DATA . . . 26
4.3 SUPPLY . . . 26
4.4 IF SECTION . . . 27
4.4.1 **PIF Amplifier** . . . 27
4.4.2 PIFAGC Negative Modulation . . . 27
4.4.3 PIFAGC Positive Modulation . . . 27
4.4.4 **Tuner AGC** . . . 27
4.4.5 **Synchronous Video Demodulator** . . . 28
4.4.6 **Demodulated Video Output (INTCVBSOUT Pin)** . . . 28
4.4.7 **SIF Amplifier** . . . 29
4.4.8 **SIF AGC (FM)** . . . 29
4.4.9 **SIF AGC (AM)** . . . 29
4.4.10 **FM Demodulator** . . . **29**
4.4.11 **De-emphasis** . . . 29
4.4.12 **AM Demodulator** . . . 30
4.4.13 **SIF Output (AM/FM or Sound Subcarriers Output)** . . . 30
4.4.14 **SAW Filter Switch Output (TQFP64 only)** . . . 30
4.4.15 **External Audio Input** . . . 30
4.4.16 **Main Audio Output** . . . **30**
4.4.17 AVL . . . 31
4.5 CVBS, Y/C, RGB INPUTS AND CVBS OUTPUTS . . . 31
4.5.1 **Luminance & CVBS Inputs** . . . 31
4.5.2 **Combined Chrominance & SVHS Selection Input** . . . 31
4.5.3 **CVBS1 Output (Pin 29 - SDIP56)** . . . 31
4.5.4 **CVBS2 Output** . . . 32
4.5.5 **OSD RGB Inputs** . . . 32
4.5.6 **FBOSD/HC Inputs** . . . 32
4.5.7 **External RGB/YCrCb Inputs** . . . 33
4.5.8 **External Fast Blanking Input** . . . **33**
4.6 LUMA PART . . . 33
4.6.1 **Y Delay Line** . . . 33
4.6.2 **Peaking Circuit** . . . **33**
4.6.3 **Black Stretch Control (Pin BS)** . . . **34**
4.6.4 **Y Output** . . . 34
4.7 FILTERS . . . 34
4.7.1 **Y Trap Filter** . . . 34
4.7.2 **Chrominance Bandpass** . . . 34
4.7.3 **Bell Filter** . . . 35
4.8 CHROMA PART . . . 35

www.DataSheet4U.com

www.DataSheet4U.com

4.8.1 **ACC** . . . 35
4.8.2 ACC Overload . . . 35
4.8.3 Killer . . . 35
4.8.4 Chroma PLL . . . 35
4.8.5 PLL Loop Filter (PAL/NTSC) . . . 35
4.8.6 Hue Control . . . 35
4.8.7 Automatic Flesh Control . . . 35
4.8.8 Color Demodulators . . . 36
4.8.9 Chroma Delay Line . . . 36
4.8.10 Chroma Reference Output . . . 36
4.9 SCANNING PART . . . 36
4.9.1 **Synchronization Separator** . . . 36
4.9.2 Horizontal Oscillator . . . 36
4.9.3 First Loop Filter . . . 37
4.9.4 Second Loop Filter . . . 37
4.9.5 Line Flyback Input/Super-Sandcastle Output . . . 37
4.9.6 Horizontal Output . . . 37
4.9.7 Vertical Output . . . 37
4.9.8 Vertical Amplitude Control . . . 38
4.9.9 Crystal Detection . . . 38
4.10 RGB CONTROL PART . . . 38
4.10.1 Y Input . . . 38
4.10.2 U & V Inputs . . . 38
4.10.3 Contrast Control . . . 38
4.10.4 Saturation Control . . . 38
4.10.5 Brightness Control . . . 39
4.10.6 RGB Matrix . . . 39
4.10.7 Drive Adjustment (White Point Adjustment) . . . 39
4.10.8 Cut-Off Adjustment (Black Point Adjustment) . . . 39
4.10.9 Cathode Current Input . . . 39
4.10.10 Beam Current Limiter Input . . . 39
4.10.11 Automatic RGB Peak Regulation (APR) / RGB Peak Limitation . . . 40
4.10.12 RGB Outputs . . . 41
4.11 I²C BUS CHARACTERISTICS . . . 43
4.11.1 SCL . . . 43
4.11.2 **SDA** . . . 43
4.11.3 **I²C Timing** . . . 43
5 I²C BUS SPECIFICATIONS . . . 44
6 I²C BUS SELECTION . . . 45
6.1 SUMMARY INPUT SIGNALS (WRITE MODE) . . . 45
6.2 SUMMARY OUTPUT SIGNALS (READ MODE) . . . 46
6.3 INPUT SIGNALS (WRITE MODE) . . . 47
6.3.1 PIFVCO Free Running . . . 47
6.3.2 PIF Free Running Coarse . . . 47
6.3.3 PIF Features . . . 47
6.3.4 Tuner Delay . . . 48
6.3.5 SIF Features and Audio Switches . . . 48
6.3.6 Video Controls . . . 49

www.DataSheet4U.com

www.DataSheet4U.com

6.3.7 Chroma Controls 51
6.3.8 Scanning Controls 52
6.3.9 **Miscellaneous** 53
6.4 OUTPUT SIGNALS (READ MODE) 54
6.5 POWER-ON RESET - INITIAL BUS REGISTER CONDITIONS 56
7 I²C BUS SPECIFICATION COMPATIBILITY 57
8 INPUT/OUTPUT SCHEMATIC DIAGRAMS 58
9 APPLICATION DIAGRAMS 79
10 THERMAL CONSIDERATIONS FOR TQFP64 PACKAGE 83
11 SUMMARY OF CHANGES 84
12 GENERAL PACKAGE INFORMATION 85
12.1 PACKAGE MECHANICAL DATA 85

www.DataSheet4U.com

www.DataSheet4U.com

1 GENERAL DESCRIPTION

1.1 INTRODUCTION

The STV224XH/228XH/223XH are fully bus-controlled ICs for TV that include PIF, SIF, Luma, Chroma and Deflection processing functions. Used with a vertical frame booster (TDA8174A for a 90° chassis, STV9306 for a 110° chassis), they allow multistandard (BGDKIMNLL', PAL/SECAM/NTSC) sets to be designed with very few external components and no manual adjustments.

Package	Application			
	PAL/NTSC Intercarrier	PAL/NTSC QSS/Intercarrier	PAL/SECAM/NTSC QSS/Intercarrier AM	PAL/SECAM/NTSC QSS/Intercarrier
SHRINK56	STV2246H/86H	STV2247H	STV2248H	STV2249H
TQFP64	STV2236H	STV2237H	STV2238H	STV2239H

Function	2246H/36H	2286H	2247H/37H	2248H/38H	2249H/39H
PAL/SECAM/NTSC				X	X
PAL/NTSC	X	X	X		
QSS/Intercarrier			X	X	X
Intercarrier Only	X	X			
AM				X	
Audio FM Wide mode with QSS Application			X	X	X
1 EXT RGB Input (OSD)		X			
OSD RGB Inputs & RGBEXT/YCrCb Inputs	X		X	X	X

www.DataSheet4U.com

1.2 PIN DESCRIPTION

Table 1. Pin Configuration

PIN		Symbol	Description
STV224XH/228XH	STV223XH		
SDIP56	TQFP64		
1	8	SIFIN1	SIF Input (Please refer to Note 1)
2	9	SIFIN2	SIF Input (Please refer to Note 1)
3	10	AGCSIFCAP	AGC SIF Capacitor (Please refer to Note 1)
4	11	V_{REFIF}	Voltage Reference Filtering
5	12	AGCPIFCAP	AGC PIF Capacitor
6	13	PIFIN1	PIF Input
7	14	PIFIN2	PIF Input
-	15	SAW	Filter Switch Control
8	16	TUNERAGCOUT	AGC Tuner Output
9	17	IFPLL	IF PLL Filter
10	18	GND_{IF}	IF Ground
11	19	AM/FMOUT/SC	AM/FM Mono Sound or Stereo Carriers Output
12	20	V_{CCIF}	5 V IF Supply
13	21	INTCVBSOUT	Internal CVBS Output
14	22	EXTAUDIOIN	External Audio Input
15	23	PIFLC1	LC Input
16	24	PIFLC2	LC Input
17	25	V_{CC2}	Video/Luma Supply Voltage (8 V)
18	26	CVBSIN1	Internal Video Input

www.DataSheet4U.com

PIN		Symbol	Description
STV224XH/228XH	STV223XH		
SDIP56	TQFP64		
19	27	GND2	Video/Luma Ground
20	28	CVBSIN2	External Video Input
21	29	BS	Black Stretch Capacitor
22	34	Y/CVBSIN3	Y(SVHS) or CVBS3 External Input
23	35	CHR	Chroma (SVHS) Input
24	36	APR	Automatic RGB Peak Regulation
25	37	BEXT/Cb	External Blue Input or external Cb Input (Please refer to Note 2)
26	38	GEXT/Y	External Green Input or external Y Input (Please refer to Note 2)
27	39	REXT/Cr	External Red Input or external Cr Input (Please refer to Note 2)
28	40	FBEXT	External Fast Blanking Input (Please refer to Note 3)
29	41	NTBC/CVBSOUT1	Not To Be Connected or CVBS Output 1 (Please refer to Note 4)
30	43	BOUT	Blue Output
31	44	GOUT	Green Output
32	45	ROUT	Red Output
33	46	I_{CATH}	Cathode Current Measurement Input
34	47	BOSD	OSD Blue Input
35	48	GOSD	OSD Green Input
36	49	ROSD	OSD Red Input
37	50	FBOSD/HC	OSD Fast Blanking Input / Half Contrast
38	52	XTAL3/BTUN	3.5X MHz Crystal or Bell Filter Tuning Capacitor
39	53	XTAL2	3.5X MHz Crystal
40	54	XTAL1	4.43/3.5X MHz Crystal
41	55	CLPF	Chroma PLL Filter
42	56	X1/VAMP/CHROUT	XTAL1 Control Pin, Vertical Amplitude DAC Output and Chroma Reference Signal Output
43	57	GND1	Chroma/Scanning Ground
44	58	CVBSOUT2	Second Video Switch Output
45	59	V_{CC1}	Chroma/Scanning Power Supply (8 V)
46	61	BCL/SAF	Beam Current Limiter Control Voltage and Safety Input (XRAY)
47	62	VERT	Vertical Output Pulse
48	63	HOUT	Horizontal Output Pulse
49	64	LFB/SSC	Line Flyback Input and Super-Sandcastle Output
50	1	SLPF	Scanning PLL Filter
51	2	SCL	I²C Bus Clock Input
52	3	SDA	I²C Bus Data Input
53	4	V_{CCD}	Digital Supply Voltage (5 V)
54	5	GNDD	Digital Ground
55	6	AUDIOOUT	Main Audio Output
56	7	FMCAP	FM Demodulation Capacitor
-	30	NC	Connection to GND recommended

www.DataSheet4U.com

www.DataSheet4U.com

PIN		Symbol	Description
STV224XH/228XH	STV223XH		
SDIP56	TQFP64		
-	31	NC	Connection to GND recommended
-	32	NC	Connection to GND recommended
-	33	NC	Connection to GND recommended
-	42	NC	Connection to GND recommended
-	51	NC	Connection to GND recommended
-	60	NC	Connection to GND recommended

Note 1: Input/Output not available in STV2246H/86H versions. This pin must not be connected.

Note 2: When REXT, GEXT and BEXT pins are not used, they must not be connected. Register 0Ah must be set (d7 and d6 = 01). (RGB external inputs disabled.)

Note 3: FBEXT to be connected to ground when not used.

Note 4: CVBS output 1 on pin 29 (SDIP56), if register 1Dh = 07h.

Figure 1. STV224XH/228XH Pinout (SDIP56)

www.DataSheet4U.com

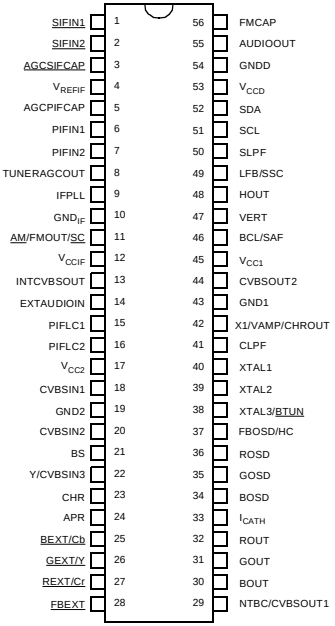

Note: Underlined pin functions are optional.

www.DataSheet4U.com

Figure 2. STV223Xh Pinout (TQFP64)

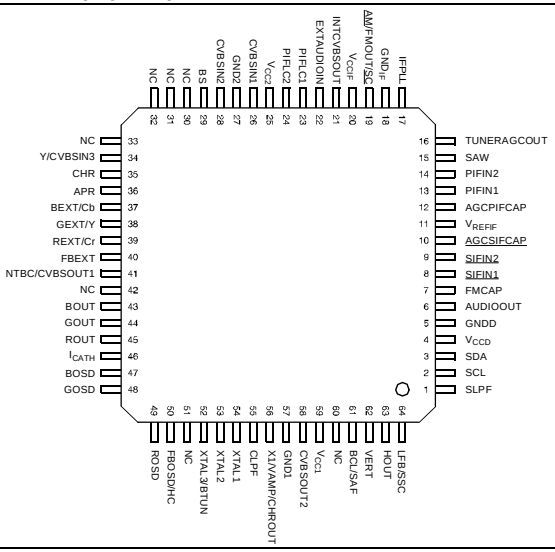

www.DataSheet4U.com

www.DataSheet4U.com

Figure 3. STV2246H (SDIP56) Block Diagram

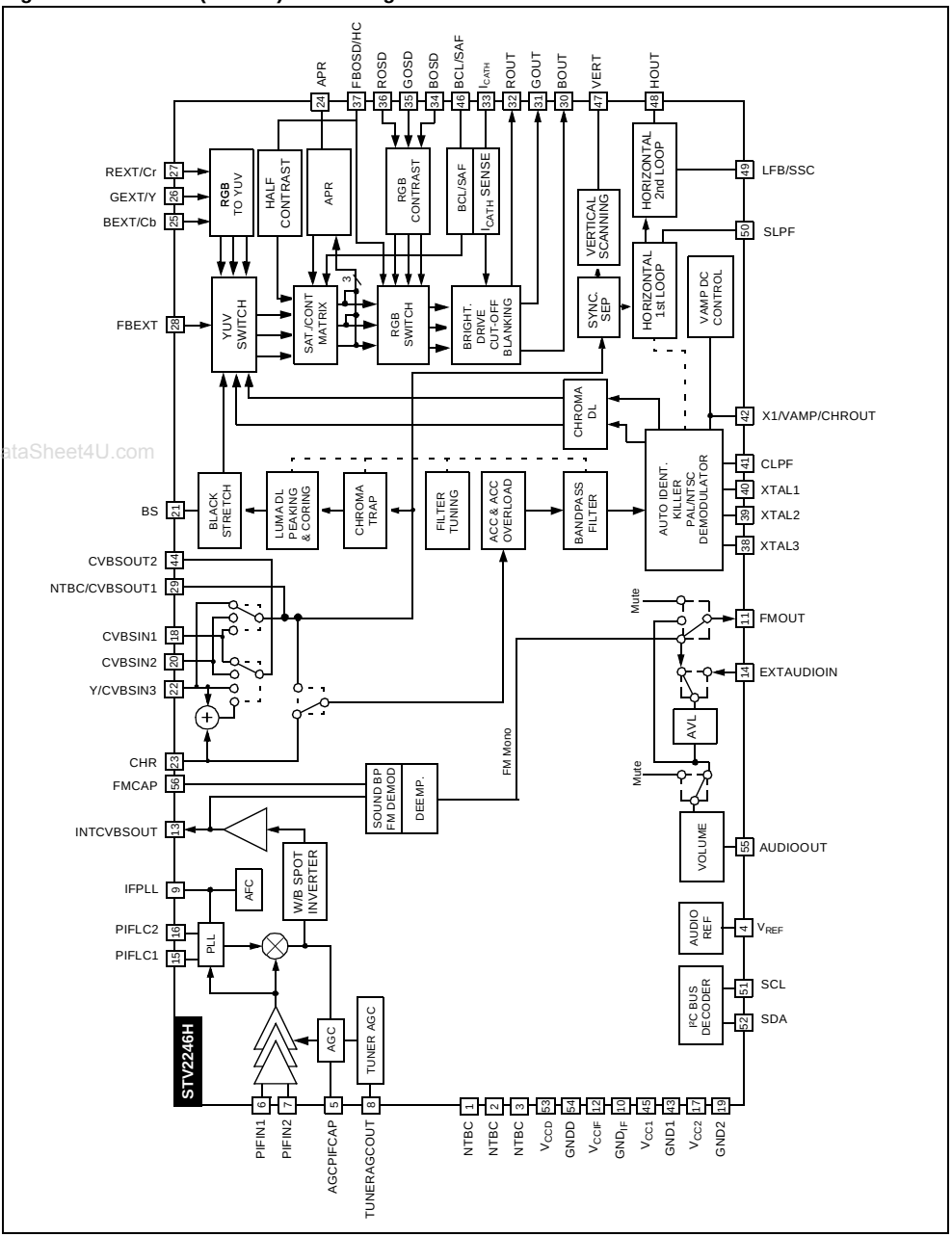

www.DataSheet4U.com

Figure 4. STV2247H (SDIP56) Block Diagram

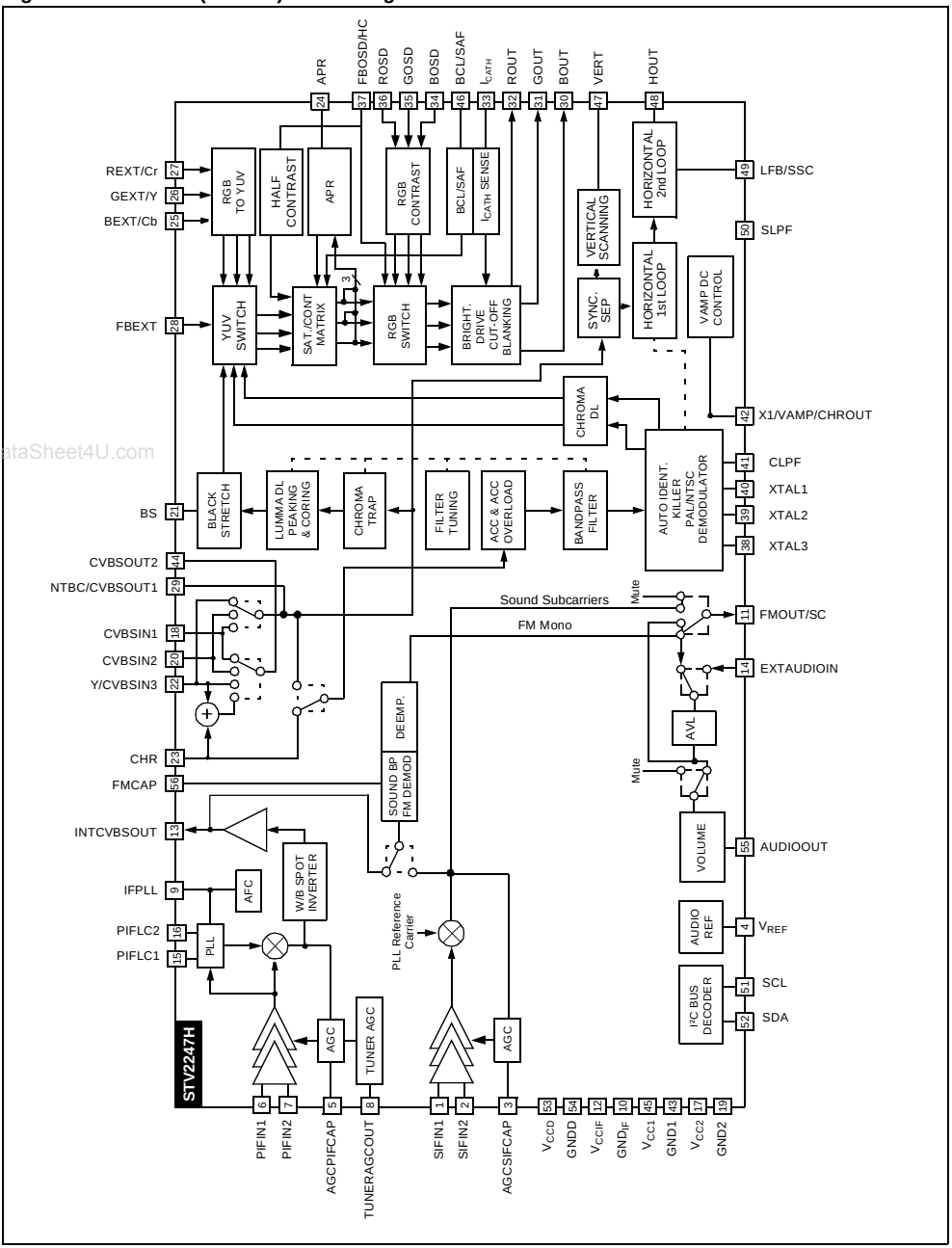

www.DataSheet4U.com

Figure 5. STV2248H (SDIP56) Block Diagram

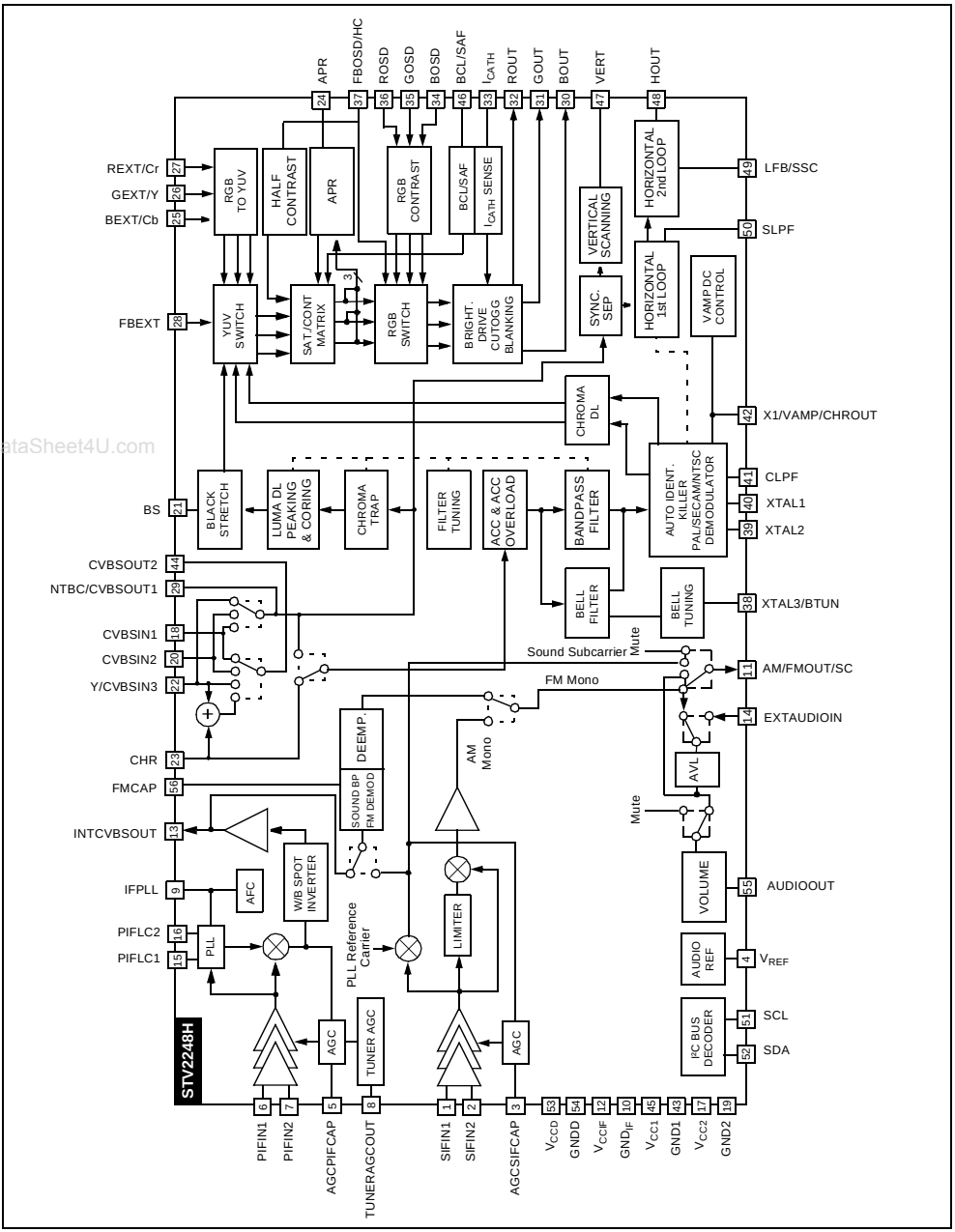

www.DataSheet4U.com

Figure 6. STV2249H (SDIP56) Block Diagram

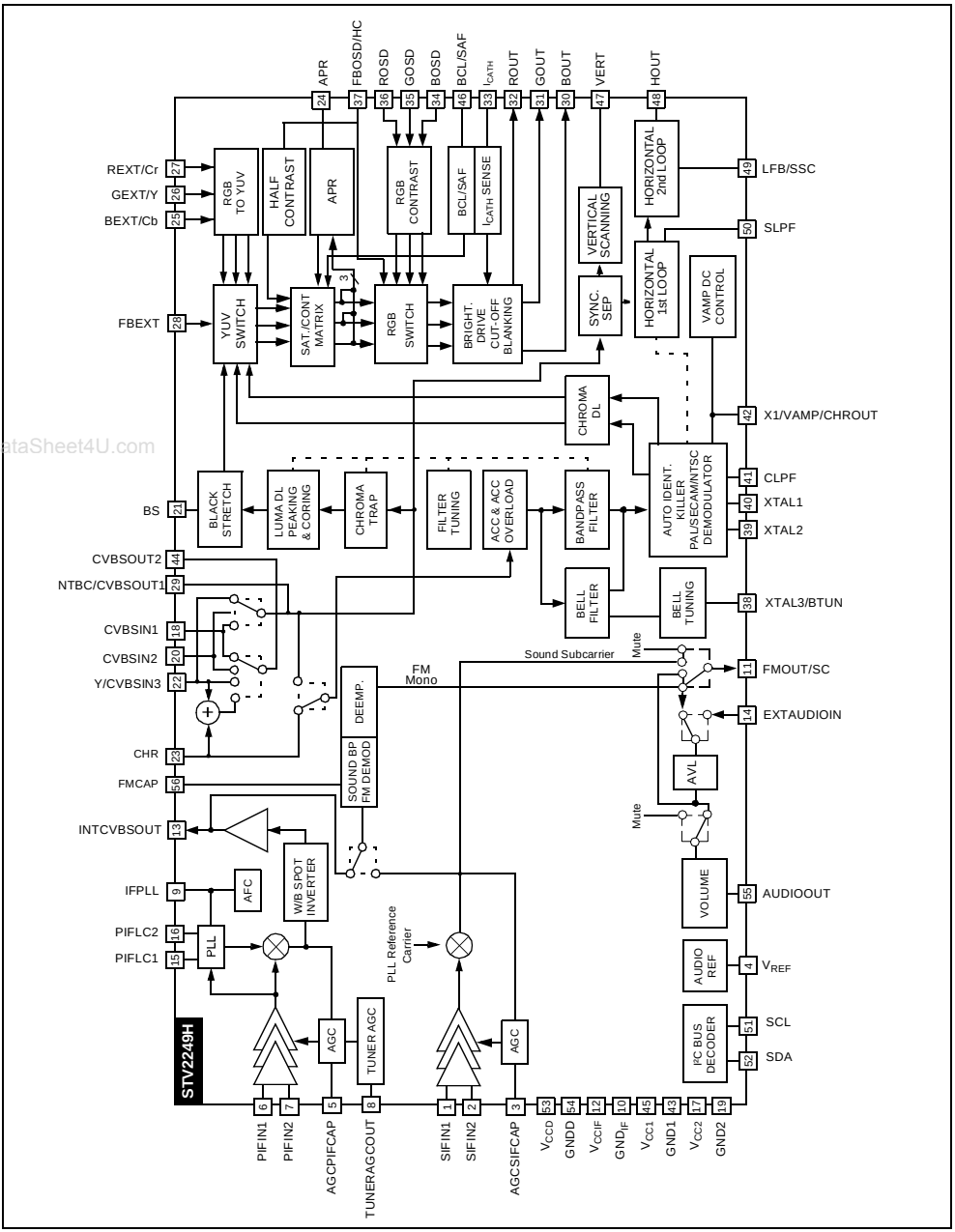

www.DataSheet4U.com

www.DataSheet4U.com

Figure 7. STV2286H (SDIP56) Block Diagram

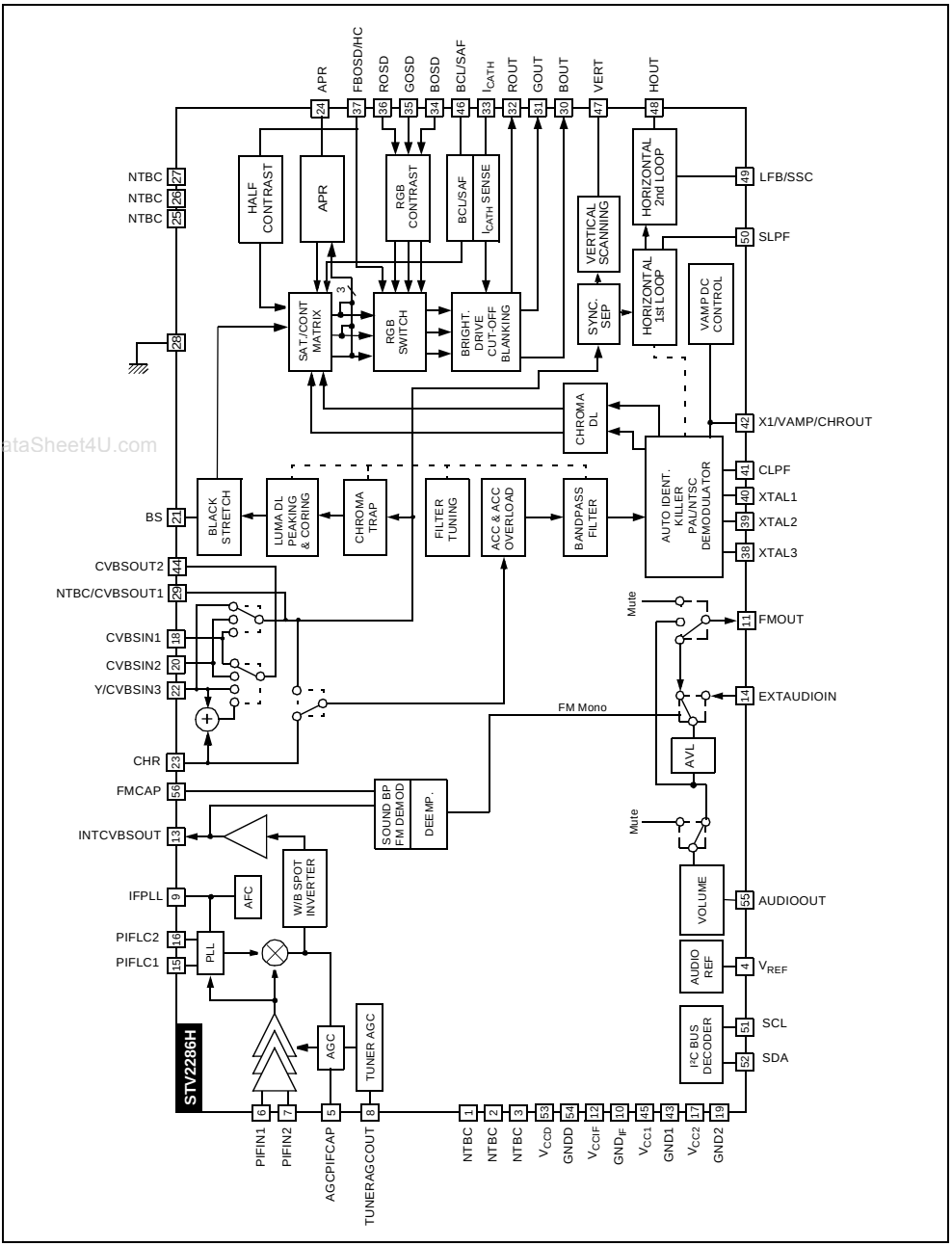

www.DataSheet4U.com

Figure 8. STV2236H (TQFP64) Block Diagram

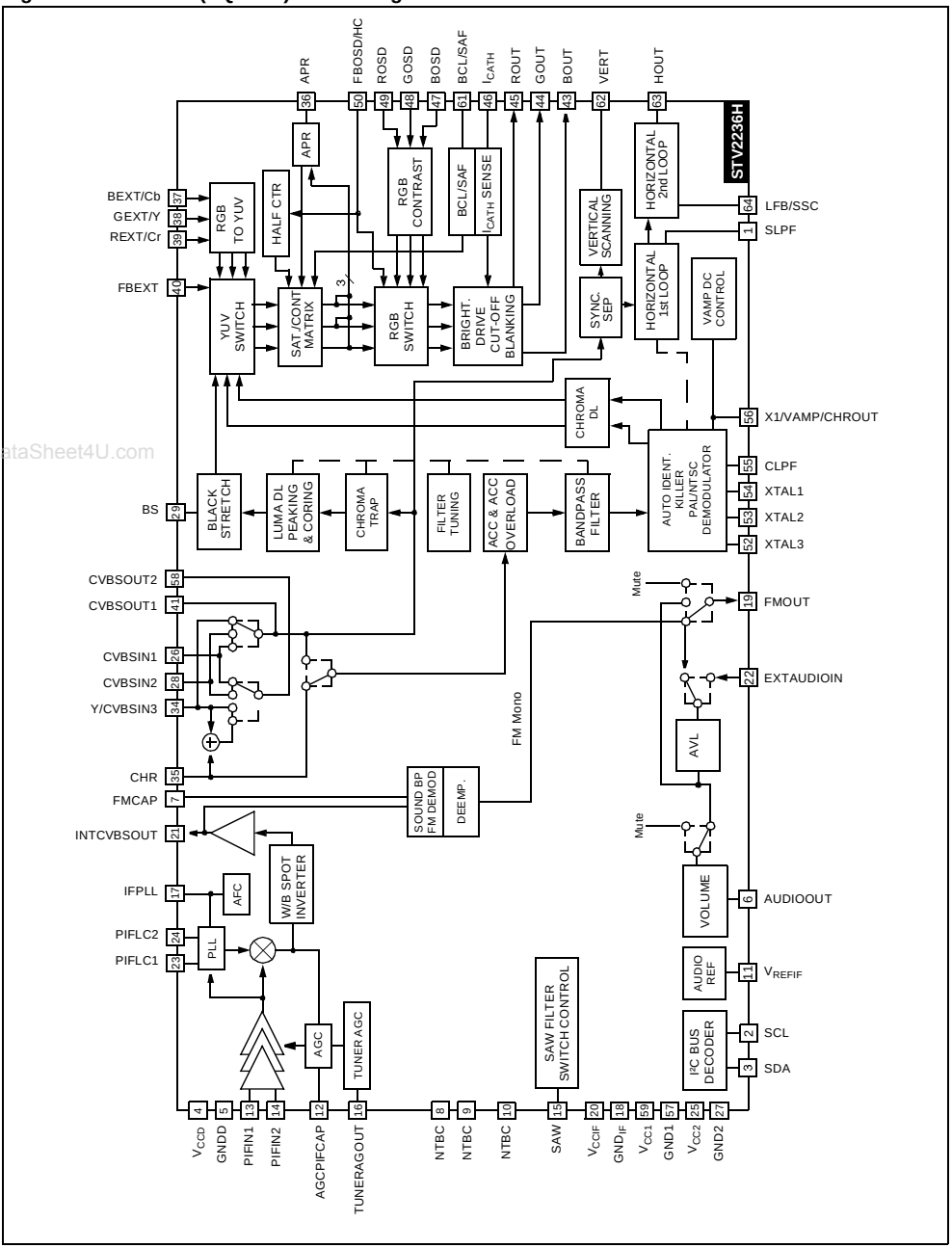

www.DataSheet4U.com

Figure 9. STV2237H (TQFP64) Block Diagram

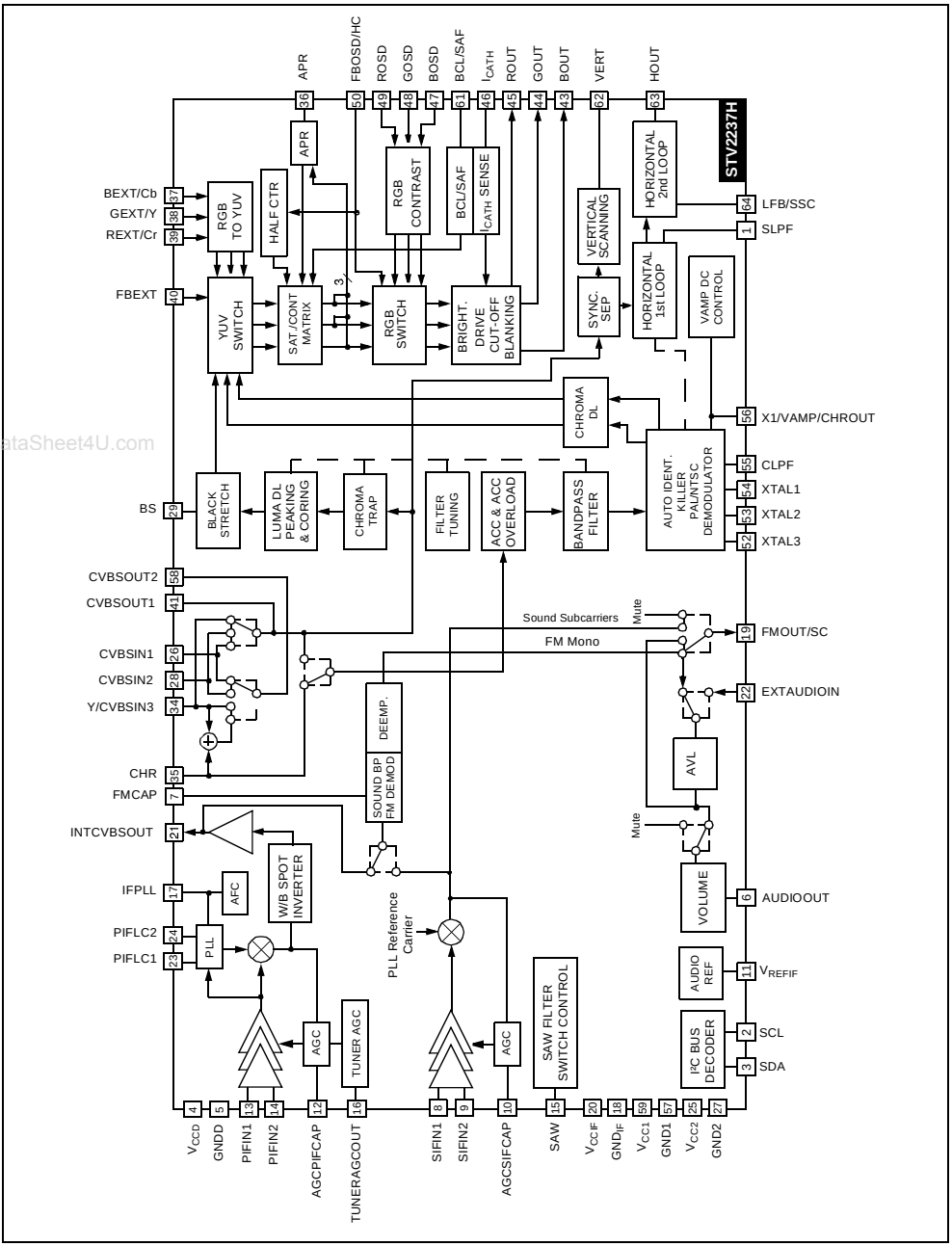

www.DataSheet4U.com

Figure 10. STV2238H (TQFP64) Block Diagram

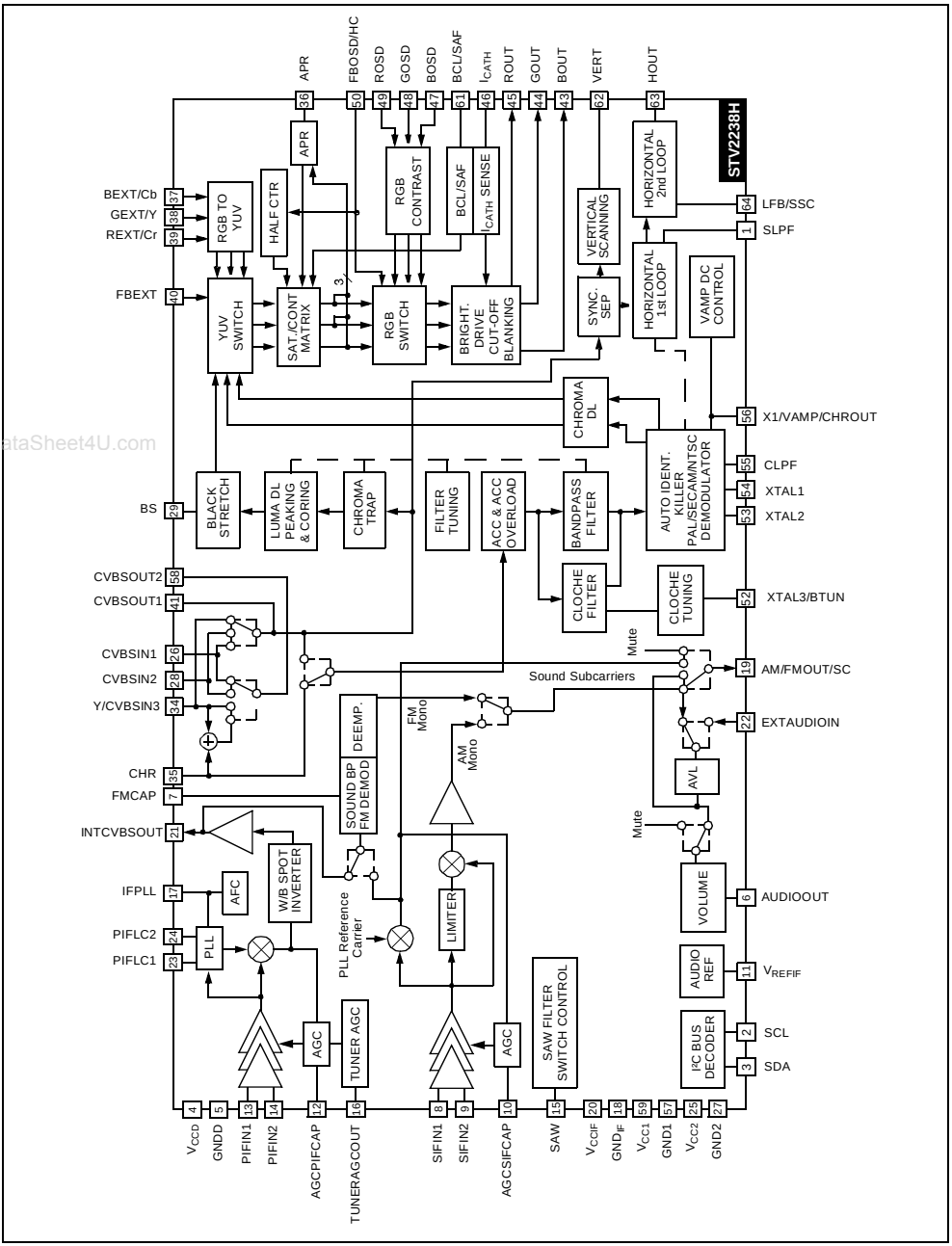

www.DataSheet4U.com

www.DataSheet4U.com

Figure 11. STV2239H (TQFP64) Block Diagram

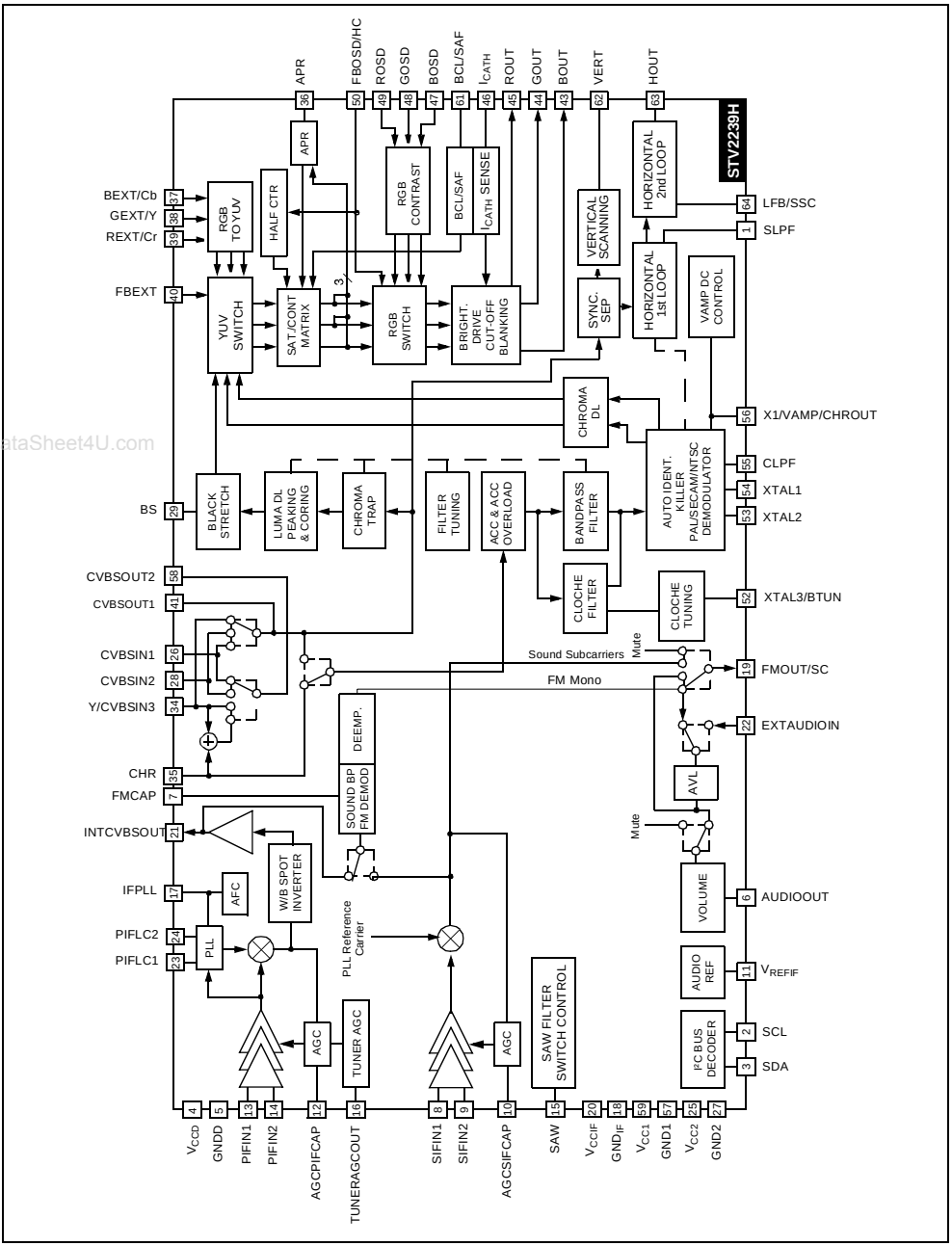

www.DataSheet4U.com

2 MAIN FEATURES

- I²C Bus control (Read and Write modes).
- PLL PIF demodulator, bus-controlled VCO alignment.
- Positive and negative IF modulation.
- Digital AFC.
- Tuner-delayed AGC output.
- White and Black Spot cancellation.
- SIF with QSS structure.
- Intercarrier capability.
- Built-in sound bandpass.
- Multistandard PLL FM Demodulator (4.5, 5.5, 6.0, 6.5 MHz).
- Audio FM Wide mode (BGDKI): Capable of demodulating ±400 kHz overmodulated audio signals, to be used in QSS architecture.
- AM demodulator for France.
- Sound subcarrier output for Stereo chassis: FM and NICAM carriers.
- Audio switch for external audio input, Mono chassis.
- Digital volume control.
- Audio Mute.
- Automatic Volume Levelling (AVL) on audio signal (internal or external audio).
- Digital buffer for SAW filter switching.
- Video switch, three Composite Video Broadcasting Signal (CVBS) inputs and two CVBS outputs (which can be used to drive a teletext decoder).
- SVHS switch, Y input is combined with CVBS3 input.
- Capability to output Y+C signal on second CVBS output.
- OSD RGB analog inputs, fast blanking detection on fast blanking OSD pin, contrast control capability.
- Half-contrast control pin.
- External analog RGB inputs with contrast and saturation control (external RGB matrixed in YUV). External analog YCrCb inputs can be connected to the same inputs. In this case, the sync signal must be sent to the CVBS input, and External YCrCb mode must be selected through the I²C bus.
- Y,U,V inputs outputs: Y,U,V inputs/outputs for the use of enhanced picture ICs.
- Integrated chroma filters (trap, bandpass, bell) with automatic alignment.
- Integrated luminance delay line.
- Adjustable peaking on the luminance signal with coring function.
- Black Stretch circuit.
- Automatic RGB peak regulation (APR) or RGB peak limitation.
- PAL/SECAM/NTSC color decoder with automatic identification of standards.
- Integrated chroma delay line.
- Full integrated SECAM decoder.
- Hue control, 2 selectable matrices in NTSC mode.
- Automatic Flesh Control circuit with two selectable characteristics (normal and wide).
- Automatic Color Control (ACC) overload circuit.
- Chroma subcarrier output which could be used to drive a comb filter circuit.
- Automatic digital cut-off current loop with warm-up detection circuit.
- White point (drive) and cut-off point adjustments.
- Manual cut-off capability.
- Beam current limiter control stage.
- High-performance sync pulse separator.
- Horizontal synchronization with two phase-locked loops.
- Integrated VCO, auto-calibration using the chroma crystal reference frequency.
- Automatic time constant selection for the first PLL, three selectable time constants.
- Video identification circuit (independent from PLL1).
- Noise detector circuit.
- Vertical countdown circuit.
- Automatic 50/60 Hz selection circuit.
- Blanking and inserted cut-off pulses position adapted to standard (50 or 60 Hz).
- Long blanking mode capability in 60 Hz (same blanking as with 50 Hz standard).
- De-interlace capability.
- Horizontal starting circuit with soft-start capability.
- Horizontal and vertical position adjustments, vertical amplitude control voltage (combined with chroma subcarrier output).
- Oversize Blanking capability on OSD Fast Blanking input.

www.DataSheet4U.com

3 FUNCTIONAL DESCRIPTION

The STV224XH/228XH is an integrated device that processes PIF, SIF, Video and Chroma signals while scanning for PAL, SECAM and NTSC standards. It includes a base band chroma delay line, Video, SVHS and audio switches.

3.1 DETAILED FEATURES

3.1.1 Power Supplies

V_{CCIF}: 5 V power supply dedicated to IF processors. GNDIF is the ground reference of these parts.

V_{CCD}: 5 V power supply dedicated to I²C bus and digital parts. GNDD is the ground reference of these parts.

V_{CC1}: 8 V power supply for video switches, scanning part and the chroma decoder. GND 1 is the ground reference of all these functions.

www.DataSheet4U.com

V_{CC2}: 8 V power supply for the luminance, RGB processing parts audio switch and internal CVBS output. GND2 is the ground reference of these parts.

3.1.2 Picture Intermediate Frequency (PIF)

– AGC amplifier.

– PLL synchronous demodulator. Bus-controlled VCO for integrated tuning of the external LC resonator. For a 38.9 MHz VCO, the LC coil specification has to be:
C = 39pF, f = 44 MHz ±2% (LC not connected).
For a 33.9 MHz VCO (L'), the VCO can be switched via the bus control.

– Digital AFC via bus.

– IF Automatic Gain Control (AGC)
Negative modulation: top sync regulation, regulation of overmodulated signals (overmodulation regulation circuit enabled through bus control).
Positive modulation: main regulation on white level with black level limitation.

– Tuner-delayed AGC with bus control for AGC gain and threshold. Tuner AGC output status can be read in I²C bus read register.

– CVBS output with two bus-controlled amplitudes. CVBS output at 2 V_{PP} if external sound trap is not connected (QSS mode, for example). CVBS output at 2.3 V_{PP} if external sound trap is connected.

3.1.3 Sound Intermediate Frequency (SIF) and Sound Demodulators

– QSS structure.

– SIF Automatic Gain Control (QSS mode).

– Built-in sound bandpass.

– PLL FM Demodulator for 4.5, 5.5, 6.0 or 6.5 MHz carriers. The Sound Standard is selected by the MCU. The FM demodulator VCO is automatically calibrated using the chroma crystal VCO reference frequency. The FM Demodulator VCO is automatically calibrated for all sound standards independently of the chroma crystal VCO frequency, which is either 4.4 MHz or 3.5 MHz. For each sound carrier frequency, the IC sends an indication of the sound subcarrier level to the MCU so that it can select the proper standard. In Normal mode, the maximum FM deviation is 200 kHz. In Audio FM Wide mode (BGDKI), the maximum FM deviation is 400 kHz. The Audio FM Wide mode of the STV224XH must be used in QSS applications only, using standard specific SAW filters (DK SAW filter or BG SAW filter).

– The sound subcarrier level is valid when the FM Demodulation VCO is calibrated. This information can be read via the I²C Bus.

– Bus controls for FM de-emphasis (50 or 75 µs) and FM deviation ±25 or ±50 kHz).

– AM demodulator.

– Sound demodulator output: either an AM or FM signal can be the output for the Mono chassis

– Sound subcarriers for the Stereo chassis.

3.1.4 Audio Switch

– One SCART switch.

– Bus-controlled volume and mute. Zero-crossing function on volume control.

– Automatic Volume Levelling (AVL) function can be enabled via the I²C bus.

– AVL status (Min. or Max. AVL Gain) can be read in I²C bus register.

– The AM sound can be selected on the main audio output for the Stereo chassis.

3.1.5 Surface Acoustic Wave (SAW) Filter Switch Control

– SAW filter switch control pin is available in the TQFP64 package. The SAW filter switch control pin is used to select the correct SAW filter characteristics (e.g.: M/N or BGDK characteristics). In a multi-standard chassis, two output voltages are selected via the I²C bus (low level voltage at 0.4 V Max., and high level voltage at 4 V Min.).

3.1.6 Video Switches

– Video switch with three CVBS inputs and one CVBS output (CVBSOUT1) which may be used to drive a teletext decoder.

www.DataSheet4U.com

– A second CVBS output (CVBSOUT2) is able to output recombined Y+C signals.
All switches are independently controlled.

– SVHS switch, Y input is combined with CVBS 3 input. CVBS/SVHS modes can be selected either by bus control (software selection), or by sensing the DC voltage on the Chroma Input pin (hardware selection). If the Chroma Input is grounded, the CVBS mode is selected and the bus control is not active. If the DC level of the Chroma Input is higher than the SVHS threshold, then the bus control for the SVHS switch is active. Therefore, the SVHS mode can be selected by hardware using a special SVHS connector that includes a mechanical switch. In this type of application, the bus control is set to SVHS mode, and the CVBS mode is selected by grounding the Chroma Input pin.

3.2 DEFLECTION PART

www.DataSheet4U.com

3.2.1 Synchronization Separator

– Fully-integrated synchronization separator with a low pass filter, black level alignment of the CVBS input, and a 50% slicing level for the synchronized pulse amplitude.

3.2.2 Two Phase-Locked Loops (PLL)

Auto-calibrated VCO using the chroma crystal reference. Crystal control pin X1/VAMP/CHROUT indicates the crystal reference value on Pin XTAL1.

When a 4.43 MHz crystal is connected to Pin XTAL1, the output load on Pin X1/VAMP/CHROUT must be greater than 80 kΩ. When a 3.58 MHz crystal is connected to Pin XTAL1, the output load must be less than 10 kΩ.

The first PLL locks the VCO to the video line frequency and the second PLL compensates the line transistor storage time.

Three time constants for the first PLL.

– [X,Y]: Line number referring to the internal line counter numbering system.

The long time constant is used for normal operation.

The short time constant is automatically used during the VCR search mode and frame retrace when the frame pulse is outside [258,264] and [309,314].

The very long time constant is used when there is no video recognition (very good OSD stability).

Time constants in normal operation (automatic selection of time constants):

– 50 Hz input signal:
short time constant: [306,21],
long time constant: the rest of the field.

– 60 Hz input signal:
short time constant: [0,16],
long time constant: the rest of the field.

3.2.2.1 Inhibition of the First PLL

The first PLL is inhibited from line 309 to line 4.5 (or 314) in 50 Hz mode and from line 258 to line 5.5 (or 264) in 60 Hz mode. The time constant values are chosen by means of external components.

– Possibility of forcing the short time constant during the all frame via the bus.

– Possibility of forcing the long time constant during the all frame via the bus.

– Possibility of forcing a very long time constant during the all frame via the bus.

Generation of burst gate pulses and line frequency signals from the first PLL to drive the Chroma and Video circuits. The burst gate pulse is also sent to the super-sandcastle generator.

3.2.3 Video Identification

The video identification status is available in the output register of the I²C bus decoder (independent from PLL1).

3.2.4 Vertical Synchronization

Frame synchronized window:

– large window: [248,352] in AUTO mode, [248,284] in forced 60 Hz mode, [288,352] in forced 50 Hz mode.

– narrow window: [309,314] in 50 Hz mode, [258,264] in 60 Hz mode.

Field frequency selection windows:

– [248,284] 60 Hz mode selection window.

– [288,352] 50 Hz mode selection window.

Frame blanking pulse adapted to standard:

– from line 309 to line 21 in 50 Hz mode,

– from line 258 to line 16 in 60 Hz mode.

3.2.5 Vertical Blanking

Long blanking mode: the end of frame blanking is line 21 both in 50 and 60 Hz modes. This mode is useful when the flyback time of the vertical output stage is longer than the 60 Hz blanking time. It is used to optimize the 50/60 Hz vertical amplifier application due to long frame blanking.

3.2.6 Vertical Oversize Blanking

The Oversized Blanking function is controlled by the voltage on the FBOSD pin. When the FBOSD voltage is between the first and the second thresh-

www.DataSheet4U.com

olds, the OSD RGB signals are selected. When the FBOSD voltage is greater than the second threshold (4 V blanking threshold), the RGB outputs are blanked during the whole field, but not during inserted cut-off lines (the cut-off loop is always active). The blanking feature, via the FBOSD input pin, enables Vertical Oversize Blanking when a 4:3 picture is displayed on a 16:9 screen in Zoom mode. The picture outside the screen is blanked by the Oversize Blanking pulse supplied by the external vertical IC (STV9306).

3.2.7 Vertical Output

The Vertical output pulse is locked on a pulse that is twice the horizontal frequency to ensure perfect interlacing.

The Vertical output pulse duration is 10.5 lines. Horizontal output pulse is a 28 µs line pulse on an open collector output.

3.2.8 Vertical Control

www.DataSheet4U.com

Bus-controlled DC output voltage for adjusting the vertical amplitude (pin VAMP). This voltage supply is used to adjust the slope of the vertical sawtooth generated by the external vertical booster.

Bus-controlled vertical position (pin VERT). The high level of the vertical pulse is used to adjust the vertical position.

The bus-controlled vertical output (pin VERT) low level voltage can be either 0.2 V or 2.0 V.

3.2.9 Horizontal Output

Start-up circuit: the horizontal output is at high level (disabled) when V_{CC1} increases from 0 to 6.0 V and when V_{CCD} has not reached 4 V.

Soft mode circuit: it provides a softer operating horizontal output with a 75% duty cycle [t_{HIGH} / (t_{HIGH} +t_{LOW})]. This results in a smaller conducting time (16 µs instead of 28 µs).

This mode is active at start-up until two frames after the V_{CC2} reaches 75% of the V_{CC1}. It is also active at shutdown when the V_{CC1} floats between 6 V and 5.4 V. And finally, this mode is used if the V_{CC2} drops below 75% of the V_{CC1}.

At shutdown, horizontal pulses are disabled when V_{CC1} is less than 5.4 V or when V_{CCD} is less than 3.5 V.

The horizontal output pulse may be disabled via the bus (force a high level on HOUT).

The horizontal position adjustment is controlled via the bus.

3.2.10 Horizontal Control

Safety input on BCL Pin. When the BCL Pin is switched to ground, the horizontal output pulse is disabled and the inhibition of horizontal output pulse is maintained until V_{CC1} is less than 3 V (V_{CC1} power supply is switched off). The Safety function can be disabled via the I²C bus. When register 15hex data D7 is set to “1”, the Safety function is reset and no longer active.

3.2.11 Combined Line Flyback / Super-Sandcastle

Combined Line Flyback input and Super-Sandcastle output: The line blanking level is clamped at 3 V, the burst key pulse voltage is 5 V and vertical pulse voltage is 2 V. The line pulse is extracted with a 2.5 V slicing level used for RGB line blanking and PLL2 control.

3.2.12 Line Blanking

Line blanking at RGB outputs is logical OR of line flyback pulse and internal line blanking pulse with a 12 µs width.

In Wide Line Blanking mode, line blanking at RGB outputs is logical OR of line flyback pulse and internal line blanking pulse with a 15.8 µs width.

Wide line blanking is recommended when displaying a 4:3 image on a 16:9 screen (horizontal scanning reduction).

3.2.13 Copy Protection Mode

This mode is used to improve the display of copy-protected video signals.

3.3 FILTERS

3.3.1 Integrated Trap Filter

Q = 1.5 (f-3dB = f0 (1-1/2Q)),

Center frequency:

– 4.43 MHz, 3.58 MHz for PAL and NTSC.

– 4.25 MHz, for SECAM
(-20 dB rejection between 4.1 MHz and 4.4 MHz).

The chroma trap filter is switched off in SVHS mode, or in color standard search mode (standard not identified). In external YCrCb mode, the trap and luma delay can be switched off via the I²C bus.

3.3.2 Integrated Chroma Bandpass

Q = 3.5, Center frequency: 4.43 MHz, 3.58 MHz. The Bus Control Frequency Shift is used to optimize the chroma response for the video signal from the IF stage.

3.3.3 Integrated Bell Filter for SECAM

Q = 16, Center frequency: 4.286 MHz.
The Bus Control Frequency Shift is used to optimize the chroma response for the video signal from the IF stage.

www.DataSheet4U.com

3.3.4 Integrated Luma Delay Line

Bandwidth: 8 MHz.

The Luma Delay Line is automatically adapted to the chroma standard. For PAL BG and applications without group delay compensation, a Luma Delay Shift of -140 ns can be selected via the I²C bus.

3.3.5 Filter Tuning

All filters are tuned via a reference phase-locked loop. The PLL is based on a trap filter, a phase comparator and an internal loop filter (capacitor). The reference signal is the continuous carrier wave from the Chroma VCO (4.43 MHz or 3.58 MHz). The PLL adjusts the center frequency of the trap until it equals the reference signal.The PLL tuning voltage is used to adjust all other integrated filters. The Bell filter is fine-tuned with a second PLL during the frame retrace. The Bell filter tuning voltage is memorized on an external capacitor (BTUN Pin).

www.DataSheet4U.com

3.4 VIDEO CIRCUIT

3.4.1 RGB Inputs

The RGB (OSD) input has priority over the external RGB input. The RGB (EXT) source is matrixed into YUV signals for color and contrast adjustments. The brightness is adjusted according to the internal and external RGB and OSD RGB signals. The Contrast Control regulates both external and internal RGB signals and has a maximum attenuation of -24 dB. It also regulates the OSD RGB signal and its maximum attenuation is limited to -12 dB. The Contrast Control for RGB (OSD) input can be disabled via the bus. The brightness of the RGB (OSD) input varies according to the main brightness level.

The RGB (EXT) insertion signal can be disabled or forced via the bus. A fast blanking detector on the external fast blanking input is able to detect the Fast Blanking pulse occurrence at each frame and then memorizes it until the end of the next frame. RGB Insertion is controlled either by an external signal on the FBEXT pin or via the I²C bus. The Fast Blanking detection status is sent to the I²C bus read register.

3.4.2 YCrCb Mode

External YCrCb signals can be applied to RGB (EXT) inputs. Two input modes are possible:

– The Sync signal is applied to CVBS input, the Y signal is applied to GEXT, the Cr signal is applied to REXT and the Cb signal is applied to BEXT.

– The Y signal is applied to CVBS input, the Cr signal is applied to REXT and the Cb signal is applied to GEXT. The trap and luma delay line must be disabled by the I²C bus and peaking must be set to minimum.

The OSD fast blanking input has several functions: OSD Insertion Control, RGB Output Blanking or Half Contrast Control.

3.4.3 Half-Contrast Control

A 6 dB gain reduction will be applied to the internal YUV signals when the half-contrast function is turned ON, and the voltage of the half-contrast input exceeds the threshold (0.7 V Typ.).

The Half Contrast input is combined with the FBOSD input.

3.4.4 YUV to RGB Matrix

The PAL/SECAM matrix is provided and a specific NTSC matrix is used when demodulation angles are (0°,104°).

3.4.5 Automatic Cut-off Current Loop

The Cut-off Loop range is 2 V (the cut-off level of the RGB outputs is between 1.5 V and 3.5 V, 2.5 V Typ.). The cut-off current is measured sequentially during the three lines after the internal frame blanking signal (the blue cathode current is measured first, then the green and red). The Leakage cathode current is measured during frame blanking and is memorized on an internal capacitor. The Cut-off loop can be frozen via the bus. To prevent cut-off lines from being visible in 16:9 mode, cut-off pulses are not inserted when the cut-off loop is frozen.

3.4.6 Warm-up Detector

At power on, the cut-off loop is not active and high DC levels are inserted during "cut-off" lines. The Cut-off loop will be active when the cathode current reaches the warm-up detection threshold. This causes the picture to be displayed from a dark screen. The RGB outputs are blanked until cut-off current is close to the reference voltage.

The manual cut-off mode can be selected via the I²C bus. In this mode, the I_{CATH} input pin is inactive and cut-off pulses are not inserted. The RGB black levels are independently controlled by three I²C bus registers (8-bit resolution). The black level of each RGB output can be adjusted within a range of 2.5 V (typ.).

3.4.7 Beam Current Limiter DC Voltage Input

The Beam Current Limiter (BCL) will first decrease the contrast and then the brightness when the contrast attenuation reaches -5 dB.

3.4.8 Drive (RGB gain) and DC Adjustment

The red, green, blue channel gain for white point adjustment takes place via the bus. The red and

www.DataSheet4U.com

green DC levels for black point adjustment takes place via the bus.

3.4.9 Bus-controlled Contrast & Saturation

The Contrast Control regulates internal RGB, external RGB and OSD RGB inputs. The maximum attenuation on internal and external RGB inputs is -24 dB and is limited to -12 dB for OSD RGB inputs. The bus-controlled saturation range is 50 dB.

3.4.10 Bus-controlled Brightness & Sharpness

The total brightness range is 60% of the black-to-white amplitude at maximum contrast. The brightness control regulates all RGB sources (internal, external and OSD). Bus-controlled Sharpness (peaking) is provided in PAL/SECAM/NTSC standards.

3.4.11 Bus-controlled Coring on Sharpness

When the Coring-on-sharpness function is switched ON, the peaking function is not active on low amplitude signals (below 10 IRE).

www.DataSheet4U.com

3.4.12 Black Stretch

The Black Stretch circuit can be disabled via the bus. Two modes are provided, one to be used when the video signal is transmitted with a set-up (7.5IRE set-up in NTSC), the other to be used when the video signal is transmitted without a set-up (PAL/SECAM).

3.4.13 Bus-controlled Blue Screen

The bus-controlled Blue Screen feature is used to insert a blue background on the screen when no video is available. The RGB OSD can be displayed when the blue screen is active.

3.4.14 White Insertion

This function is used to force a full white screen at RGB output via the I²C bus or during Soft mode at Powerdown.

3.4.15 Automatic RGB Peak Regulation (APR)

The APR function is used to take advantage of the total RGB output range. APR circuits detect the peak level of the RGB outputs (before OSD insertion) and regulate the RGB gain (contrast) so that signals above the APR threshold are limited. For example, at maximum drive and contrast levels with the APR function switched OFF, the 100 IRE input signal gives 3 V(B/W) to the RGB outputs. With APR ON and the APR threshold at 70 IRE, the 70 IRE input signal gives 3 V (B/W) at RGB outputs. For input signals above 70 IRE, the APR will decrease the RGB gain so that amplitude at the RGB output is always 3 V (B/W). The APR gain control voltage is memorized on an external capacitor where the gain decrease is very fast and the gain increase is very slow (several frames).

The APR function can be enabled or disabled via the I²C bus.

APR ON when register 10 hex d0 = 1 and register 07 hex d6 = 0.

3.4.16 RGB Peak Limitation

The APR function can be switched into an RGB Peak Limitation function via the I²C bus: register 07 hex, data d6 = 1 and register 10 hex d0 = 1.

For this purpose, the APR threshold, tracked with the contrast for the APR function, is changed in a fixed threshold that is independent of the contrast. In this case, the APR threshold I²C control should be set to its maximum value.

3.5 CHROMA CIRCUIT

3.5.1 PAL/SECAM/NTSC Decoders

SVHS Chroma input; bus-controlled SVHS mode.

– 30 dB Automatic Color Control (ACC) range. The ACC function is an automatic gain control of the color amplifier.

– Integrated chroma base band delay line and ON/OFF bus control.

– Automatic standard identification, with possibility of forcing the standard via the bus.

– 3-crystal application capability for the South American market:
The first crystal on Pin XTAL1 (3.5X MHz only), the second crystal on Pin XTAL2 (3.5X MHz only), and the third crystal on Pin XTAL3/BTUN (3.5X MHz only, used for PAL/NTSC application only).

3.5.2 PAL/NTSC Decoder

ACC carried out by peak detector on synchronous demodulation of the burst.

Fully-integrated killer function.

VCO using two standard crystals: 4.43 MHz and 3.58 MHz. One crystal is internally selected depending on the standard selection. A third crystal can be used in PAL/NTSC applications only.

VCO reference signal is available on Pin X1.

– 4.433619 MHz Crystal specification.
Mode of operation: serial resonance (without load capacity),
Motional capacitance: C_M = 13fF ±3fF,
Shunt capacitance: C_P < 7pF,
Serial resistance: R_S < 70Ω.

– 3.579545 MHz Crystal specification (NTSC M).
Mode of operation: serial resonance (without load capacity),
Motional capacitance: C_M = 11fF ±3fF,

www.DataSheet4U.com

Shunt capacitance: C_P < 7 pF,
Serial resistance: R_S < 70 Ω.

– 3.575611 MHz XTAL specification (PAL M).
Mode of operation: serial resonance (without load capacity),
Motional capacitance: C_M = 12fF ±2fF,
Shunt capacitance: C_P < 7pF,
Serial resistance: R_S < 70Ω.

– 3.582056 MHz XTAL specification (PAL N).
Mode of operation: serial resonance (without load capacity),
Motional capacitance: C_M = 12fF ±2fF,
Shunt capacitance: C_P < 7pF,
Serial resistance: R_S < 70Ω.

0° and ± 90° demodulation angles for PAL.

Bus-controlled demodulation angles (0, 90) or (0, 104) are available in NTSC mode.

Bus-controlled Hue adjustment is available in NTSC mode.

www.DataSheet4U.com

3.5.2.1 NTSC Automatic Flesh Control

Two automatic flesh control characteristics are available via the bus.The normal flesh control with ±10° correction and a total action range of ±60° and the wide flesh control with ±20° correction and a total action range of ±90°.

3.5.3 SECAM Decoder

The following functions are fully-integrated: Killer, PLL demodulator and De-emphasis functions.

3.5.4 Chroma Standard Identification

R-Y and B-Y outputs are blanked during Color Search mode. The color is displayed only when the chroma standard has been identified.

3.5.4.1 Sequential Identification

Three identification sequences:

– XTAL1 (4.43 MHz) mode to identify either PAL or NTSC.

– XTAL2 (3.58 MHz) mode to identify either PAL or NTSC.

– SECAM mode (XTAL1 selection).

In 3-crystal applications, the SECAM sequence is replaced by XTAL3 selection to identify either PAL or NTSC signals.

3.5.4.2 SECAM Identification

SECAM mode is locked after two identified SECAM sequences.

SECAM mode can be selected in 50 Hz mode only. PAL/NTSC has priority over SECAM standard.

www.DataSheet4U.com

4 ELECTRICAL CHARACTERISTICS

4.1 ABSOLUTE MAXIMUM RATINGS

Symbol	Parameter	Value	Unit
$V_{CC_}8V$	8 V Supply Voltage	10	V
$V_{CC_}5V$	5 V Supply Voltage	7	V
V_{ESD}	Capacitor 100 pF discharged via 1.5 kΩ serial resistance (Human Body Model)	±2	kV
T_{OPER}	Operating Temperature	0, +70	°C
T_{STG}	Storage Temperature	-55, +150	°C

4.2 THERMAL DATA

Refer to Section 10 for more information about TQFP64 cooling.

Symbol	Parameter		Typical Value	Unit
R_{thJA}	Junction-ambient Thermal Resistance at ambient 25°C	SDIP56	40	°C/W
R_{thJA}	Junction-ambient Thermal Resistance at ambient 25°C	TQFP64	50	°C/W
R_{thJC}	Junction-case Thermal Resistance at ambient 25°C	TQFP64	10	°C/W

www.DataSheet4U.com

4.3 SUPPLY

(Supplies at Typical Values, T_{amb} = 25° C, I²C bus register at power-on reset value, automatic cut-off mode, unless otherwise specified).

Symbol	Parameter	Test Conditions	Min.	Typ.	Max.	Unit
V_{CCIF}	IF Circuit Supply Voltage		4.75	5	5.25	V
V_{CCD}	Bus & Digital Supply Voltage		4.75	5	5.25	V
V_{CC1}	Chroma, Scanning Supply Voltage		7.6	8	8.4	V
V_{CC2}	Video Supply Voltage		7.6	8	8.4	V
I_{CCIF}	V_{CCIF} Current Consumption	V_{CCIF} = 5 V. No-load at RGB outputs.		58		mA
I_{CC5F}	V_{CC5F} Current Consumption	V_{CCD} = 5 V. No-load at RGB outputs.		48		mA
I_{CCI}	V_{CCI} Current Consumption	V_{CCI} = 8 V. No-load at RGB outputs.		40		mA
I_{CC2}	V_{CC2} Current Consumption	V_{CC2} = 8 V. No-load at RGB outputs.		56		mA
P_D	Total Power Dissipation	V_{CCI} = V_{CC2} = 8 V, V_{CCIF} = V_{CC5V} = 5 V No-load at RGB outputs.		1300		mW

www.DataSheet4U.com

4.4 IF SECTION

Tamb = 25°C, V_{CCIF} = 5 V, V_{CC2} = 8V, IF input =10 mV_{RMS} (at sync level for negative modulation, or at peak white level for positive modulation).

Video modulation DSB, D = 90% and f_{SC} = 33.4 MHz in B/G, D = 95% in L, f_{PC} = 38.9 MHz.

Video Bandwidth = 5 MHz, AF = 1 kHz, Audio Bandwidth = 20 kHz, FMdev = ±27 kHz.

Volume Attenuation = 0 dB, AM carrier input: 10 mV_{RMS}, 54% modulated unless otherwise specified.

4.4.1 PIF Amplifier

Symbol	Parameter	Test Conditions	Min.	Typ.	Max.	Unit
VINPIF	Input Sensitivity	-1dB at Video Output (INTCVBSOUT)	75	85	95	μV_{RMS}
RINPIF	Differential Input Resistance	PIF Inputs.	1.5	2	2.5	kΩ
CINPIF	Differential Input Capacitance	PIF Inputs.	1.5	2	2.5	pF
GR	Gain Control Range			65		dB
VMax.	Maximum Input Signal	+1dB at Video Output (INTCVBSOUT)	0.12	0.15		V_{RMS}

4.4.2 PIFAGC Negative Modulation

www.DataSheet4U.com

Symbol	Parameter	Test Conditions	Min.	Typ.	Max.	Unit
I_C	Charging Current at AGCPIFCAP Pin		450	675	900	µA
I_D	Discharging Current at AGCPIFCAP Pin		10	15	20	µA
I_C/I_D	Charging/Discharging Current Ratio		41	45	49	

4.4.3 PIFAGC Positive Modulation

Symbol	Parameter	Test Conditions	Min.	Typ.	Max.	Unit
I_C	Charging Current at AGCPIFCAP Pin		1.75	2.5	3.25	mA
I_D	Discharging Current at AGCPIFCAP Pin		0.15	0.25	0.35	µA
I_{CP}	Additional Charging Current at AGCPIFCAP Pin	L mode in case of missing VITS pulses and no white in Video content	2.8	4	5.2	µA
THICP	Threshold for additional charging current	Referred to nominal black level 2.3 V_{PP} at INTCVBSOUT Pin		160		mV
I_{DP}	Additional Discharging Current		20	30	40	µA
THIDP	Threshold for additional discharging current	Referred to nominal black level 2.3 V_{PP} at INTCVBSOUT Pin		-345		mV

4.4.4 Tuner AGC

Symbol	Parameter	Test Conditions	Min.	Typ.	Max.	Unit
IAGCT	Maximum Sinked Current		1.5	2	2.5	mA
SAGCT	Tuner AGC Slope (current)	Reg 03 (D7, D6) 00 01 10 11		50 95 170 270		µA/dB
I_{AGCP}	Maximum Tuner plus Sinked Current	(See Note 1)		40		mA
AGCST	Tuner AGC Starting Point (IF input related signal)	Reg 03 (D5 to D0 = 10 0000) Reg 03 (D5 to D0 = 00 0000) Reg 03 (D5 to D0 = 11 1111)		12 2 80		mV_{RMS}
STT	Variation of take over point with temperature			0.03	0.07	dB/K

www.DataSheet4U.com

Note 1: Additional sinked current for large increasing steps of input signal when:
- Voltage at PIFinput > Tuner AGC starting point adjustment given by the WR03(d5 to d0)
- Output Signal (IntCVBSout) saturated (VIntCBVSoutVwth) in positive modulation.

4.4.5 Synchronous Video Demodulator

Symbol	Parameter	Test Conditions	Min.	Typ.	Max.	Unit
DFPC	Vision Carrier Capture Range			±2		MHz
f_{VCO}	Maximum VCO Frequency for PIF regeneration	With external LC network at 50 MHz (see Note 2)	50			MHz
V_{ILOCK}	PIF Input Signal for PIF PLL locking			40	70	μV_{RMS}
TVCO	PIFVCO Temperature Coefficient				±20	ppm/K

Note 2: This parameter is not tested during production, it is tested during the qualification phase.

4.4.6 Demodulated Video Output (INTCVBSOUT Pin)

Symbol	Parameter	Test Conditions	Min.	Typ.	Max.	Unit
PIFOUT-Q PIFOUT-I	Video Amplitude at INTCVBSOUT Pin	Black-to-White Video amplitude: reg 02 data = 10h (INTCVBSOUT =2 V_{PP}) reg 02 data = 90h (INTCVBSOUT =2.3 V_{PP})	1.19 1.36	1.4 1.6	1.61 1.84	V
BG/L	BG to L Ratio	Video amplitude bus register Typ.: reg 02 data = 10 hex		5	8	%
DG	Differential Gain			3	5	%
DP	Differential Phase			3	5	deg
V_{PIF}	Residual Carrier Signal			1	10	mV_{RMS}
V_{R2IF}	Residual 2nd Harmonic			1	10	mV_{RMS}
S/N	Video Output S/N Ratio	See Note 3	55	60		dB
V_{WTH}	White Noise Threshold Voltage	reg 02 data = 90h 2.3 V_{PP} at INTCVBSOUT Pin		6.7		V
V_{WIL}	White Noise Insertion Level	reg 02 data = 90h 2.3 V_{PP} at INTCVBSOUT Pin		3.7		V
V_{BTH}	Black Noise Threshold Voltage	reg 02 data = 90h 2.3 V_{PP} at INTCVBSOUT Pin		1		V
V_{BIL}	Black Noise Insertion Level	reg 02 data = 90h 2.3 V_{PP} at INTCVBSOUT Pin		2.6		V
BW	Video Bandwidth		6	8	10	MHz
LUMLIN	Luminance Non Linearity				5	%
ROUT	Internal Output Resistance			50		Ω
RLOAD	Output Load Resistance	reg 02 data = 10hex (INTCVBOUT = 2 V_{PP})	2	3		kΩ
IVID	Video Output Source Current	reg 02 data = 90hex (INTCVBSOUT = 2.3 V_{PP})	7	10	13	mA
DCOUT	DC Output Level	Top Sync Level		2		V
Inter Mod.	1.07 MHz Intermodulation	Intercarrier Mode		52		dB
PSRR	Power Supply Ripple Rejection	Video signal Grey level (see Note 4) BG standard L standard	 35 30			dB
NH	Suppression of Video signals harmonics		35	40		dB

Note 3: S/N = 20 log [PIFOUT Black to White / V_{NOISE}(mV_{RMS}) weighted CCIR 567.

Note 4: Supply Voltage ripple rejection = 20log (V_{SUPPLY}/V_{OUTPUT}) measured at 100 Hz with V_{AC} Max. = 100 mVpp applied to $V_{CC\ IF}$ = 5 V.

www.DataSheet4U.com

4.4.7 SIF Amplifier

Symbol	Parameter	Test Conditions	Min.	Typ.	Max.	Unit
VINSIF	SIF Input Sensitivity	- 3dB at AM/FMOUT Pin (see Note 5) AM output amplitude, FM subcarrier amplitude		55 40		μV_{RMS}
GRSIF	Gain Control Range	- 3dB to +1dB at AM/FMOUT Pin		60		dB
C_{INSIF}	Differential Input Capacitance	SIF Inputs (see Note 6)	1.5	2	2.5	pF
R_{INSIF}	Differential Input Resistance	SIF Inputs	1.5	2	2.5	kΩ

Note 5: L standard Sc/Pc = -10 dB, Nyquist Pc = -6 dB, SIF input -4 dB with PIF input = 84 µV, BG standard Sc/Pc = -13 dB, Nyquist Pc = -6 dB, SIF input -7 dB with PIF input = 85 µV.

Note 6: This parameter is not tested during production. It is tested on the validation bench during the qualification phase.

4.4.8 SIF AGC (FM)

Symbol	Parameter	Test Conditions	Min.	Typ.	Max.	Unit
I_C	Charging Current			2.4		mA
I_D	Discharging Current			100		µA

4.4.9 SIF AGC (AM)

www.DataSheet4U.com

Symbol	Parameter	Test Conditions	Min.	Typ.	Max.	Unit
I_{NORMAL}	Charging/Discharging Current	Normal time constant		±6		µA
I_{FAST}	Charging/Discharging Current	Fast time constant		±2.4		mA

4.4.10 FM Demodulator

Electrical parameter valid in both QSS and Intercarrier modes, unless otherwise specified.

Symbol	Parameter	Test Conditions	Min.	Typ.	Max.	Unit
SIFMin	Min. Broadcast Sound/Video Carrier Ratio	Intercarrier mode: SAW filter K2955M at SNR 35 dB		-30		dB
VOAF	FM Audio Output Amplitude at AM/FMOUT Pin	FM dev = ±27 kHz BGDKI FM dev = ±13.5 kHz MN	400	500	630	mV_{RMS}
DFMX _norm	Maximum FM Deviation	THD < 10%, normal audio mode, AF = 1 kHz		200		kHz
DFMX _w_qss	Maximum FM Deviation	QSS mode, Audio FM Wide mode (reg 04h, d3d2 = 11), AF = 1 kHz		400		kHz
THD_FM	Total Harmonic Distortion	FM dev = ±27 kHz BGDKI		0.3	1	%
S/N	Audio S/N	Weighted according to CCIR468-4 Quasi-Peak		55		dB
AMR	Amplitude Modulation Rejection	m = 30%, AF = 1 kHz		32		dB
SVR	Supply Voltage Rejection	See Note 4		45		dB
S/N vsvideo	S/N versus picture content, Intercarrier mode	Intercarrier mode: SAW filter K2955M Black picture, White picture, 250 kHz squarewave		52 50 52		dB

4.4.11 De-emphasis

Symbol	Parameter	Test Conditions	Min.	Typ.	Max.	Unit
deemp-T1	De-emphasis Time Constant	B,G,D,K,I standards		50		µs
deemp-T2	De-emphasis Time Constant	M, N, standards		75		µs

www.DataSheet4U.com

4.4.12 AM Demodulator

Symbol	Parameter	Test Conditions	Min.	Typ.	Max.	Unit
AFOUT	AM Audio Output Amplitude at AM/ FMOUT Pin	54% modulation	400	500	630	mV_{RMS}
AMlowco	Low Cut-off Frequency	-3 dB compared AFout			40	Hz
AMhighco	High Cut-off Frequency	-3 dB compared AFout	30			kHz
AMthd	Total Harmonic Distortion	54% modulation			2	%
AMs/n	Signal/Noise Ratio	Weighted according to CCIR468-4 Quasi-Peak		55		dB
AMsvr	Supply Voltage Rejection	See Note 4		20		dB

4.4.13 SIF Output (AM/FM or Sound Subcarriers Output)

Symbol	Parameter	Test Conditions	Min.	Typ.	Max.	Unit
SIFout	Output Level	Sound subcarriers		150		mV_{RMS}
SIFbw	Bandwidth	Sound subcarriers	7.5			MHz
SIF dcout	DC Output Level			4		V
SIFres	Residual Carrier	Fundamental wave (38.9 MHz) and harmonics		0.4		mV_{RMS}
SIFcur	Sink Output Current	AM or FM demod. output selected Sound subcarriers output selected		0.5 1.5		mA

www.DataSheet4U.com

4.4.14 SAW Filter Switch Output (TQFP64 only)

Symbol	Parameter	Test Conditions	Min.	Typ	Max.	Unit
SAW low	Low Output Voltage	I_{SINK} = 2 mA			0.4	V
SAWcur	Maximum allowed Current				2	mA
SAW high	High Output Voltage	I_{SOURCE} = 2 mA	4			V

4.4.15 External Audio Input

Symbol	Parameter	Test Conditions	Min.	Typ.	Max.	Unit
R_{IN}	Input Resistance		70	100	130	kΩ
V_{IDC}	DC Input Voltage			2.4		V
AFIN	maximum Audio Input Signal		2			V_{RMS}

4.4.16 Main Audio Output

(See Figure 17 on page 42 and Figure 18 on page 42)

Symbol	Parameter	Test Conditions	Min.	Typ.	Max.	Unit
AMax	Maximum Attenuation (Audio Out/ AM-FM Out)	Register 05hex, data = 7Fhex		78		dB
AMin	Minimum Attenuation (Audio Out/ AM-FM Out)	V_{IN} = 1 $V_{RMS,}$ f = 1 kHz, Register 05hex, data = 00hex	-1	0	1	dB
ASTEP	Step Resolution	reg 05, d7 = 0		0.7		dB
DCSH	DC Output Shift	From max. volume to min. volume			50	mV
V_{ODC}	DC Output Level			4		V
AFDIFF	Audio Amplitude difference between sources	f = 1 kHz, f_M = ±27 kHz, Ext. Audio Input = 500 mV_{RMS}			2	dB
R_{OUT}	Output Resistance			110		Ω
BWO	Output Bandwidth		1			MHz
THD_AM	Total Harmonic Distortion	V_{IN} = 1 $V_{RMS,}$ f = 1 kHz		0.1	0.3	%

www.DataSheet4U.com

Symbol	Parameter	Test Conditions	Min.	Typ.	Max.	Unit
S/N1	Signal to Noise Ratio from External Input	Measured at 0 dB attenuation, Ext. Audio Input at 500 mV_{RMS}, CCIR 468-4 Weighted Quasi Peak		75		dB
S/N2	Signal to Noise Ratio from External Input	Measured at 20 dB attenuation, 0 dB reference Ext. Audio Input at 500 mV_{RMS}	55	60		dB
S/N3	Signal to Noise Ratio from FM Demod	Measured at 20 dB attenuation, FM: ± 27 kHz (Standards BGDKI)	52	55		dB
SVRV	Supply Voltage Rejection from External Input	Measured at f = 100 Hz from V_{CC} = 5 V and V_{CC} = 8 V	60			dB
XT	Crosstalk	See Note 7	70			dB
NOISE	Output Noise Level	CCIR 468-4 Weighted Quasi Peak Volume at minimum Volume at typical Volume at maximum		50 50 100	60 60 120	µV
AFIN	Audio Input Level	Volume = -25 dB, THD < 1%	2			V_{RMS}

Note 7: Measured from any input to output at f = 10 kHz with RL = 10kΩ and Rg = 600Ω, Volume attenuation = 0dB.

4.4.17 AVL

www.DataSheet4U.com

Symbol	Parameter	Test Conditions	Min.	Typ.	Max.	Unit
GAVL	AVL Gain Control Range (7-bit Resolution)			20		dB
AVL_{MAX}	Maximum attenuation			-15		dB
Reg.AVL	Regulation amplitude	Measured at AUDIOOUT Volume Control at maximum		0.55		V_{RMS}

4.5 CVBS, Y/C, RGB INPUTS AND CVBS OUTPUTS

4.5.1 Luminance & CVBS Inputs

Symbol	Parameter	Test Conditions	Min.	Typ.	Max.	Unit
DC_{IN1}	Black Level Voltage	Input selected on main CVBS output		3.3		V
V_{IN}	CVBS or Y Input Voltage			1	1.41	V_{PP}
-I	Negative Clamping Current	During SYNC pulse	20	27	35	µA
I	Positive Clamping Current		2.5	4.5	7	µA

4.5.2 Combined Chrominance & SVHS Selection Input

Symbol	Parameter	Test Conditions	Min.	Typ.	Max.	Unit
V	Chrominance Input Voltage	Burst Amplitude, 100/75 Color Bar		0.3	0.6	V_{PP}
V_{CLIP}	Input Amplitude before Clipping		1			V_{PP}
V_{DC}	DC Voltage	SVHS Mode	1.55	1.70	1.85	V
V_{TH}	SVHS Threshold Voltage		0.50	0.90	1.45	V
I_{LOW}	Output Current	0V at CHR Pin			150	µA

4.5.3 CVBS1 Output (Pin 29 - SDIP56)

Symbol	Parameter	Test Conditions	Min.	Typ.	Max.	Unit
V_{OUT}	Dynamic Output Amplitude	Register 1Dhex, data = 07hex			1.5	V_{PP}
R_{LOAD}	Output Load Resistance	Register 1Dhex, data = 07hex	3			kΩ
BW	CVBS Bandwidth	Register 1Dhex, data = 07hex V_{IN} = 1 V_{PP}		10		MHz

www.DataSheet4U.com

Symbol	Parameter	Test Conditions	Min.	Typ.	Max.	Unit
Crosstalk	Deletion of non-selected signals	Register 1Dhex, data = 07hex Up to 5 MHz	50			dB
MGAIN	Output Gain	Register 1Dhex, data = 07hex From any CVBS/Y inputs	-0.5	0	0.5	dB
DCMAIN	DC Output Voltage	Register 1Dhex, data = 07hex Black Level		4.2		V

4.5.4 CVBS2 Output

Symbol	Parameter	Test Conditions	Min.	Typ.	Max.	Unit
V_{OUT2}	Dynamic Output Amplitude				3	V_{PP}
R_{OUT2}	Internal Output Resistance			10		Ω
BW2	CVBS Bandwidth	V_{IN} = 1 V_{PP}	10			MHz
Crosstalk2	Deletion of non-selected signals	Up to 5 MHz	50			dB
SWI2gain	Output Gain	From any CVBS/Y inputs	5.5	6	6.5	dB
SWI2DC	DC Output Voltage	Black Level		3.8		V
R_{LOAD2}	Output Load Resistance		1.5			kΩ

www.DataSheet4U.com

4.5.5 OSD RGB Inputs

Symbol	Parameter	Test Conditions	Min.	Typ.	Max.	Unit
V_{CLAMP}	Clamp Level	Max. Contrast		4		V
V_{RGB}	RGB Input Voltage			0.7	1	V_{PP}
CRGB	RGB Gain	Max. Contrast, Max. Drive		4.28		-
Dblack	Difference of black level of internal and external signals at the RGB outputs	OSD signal versus internal signal			50	mV
I_{RGB}	Clamping Current		60	100	140	µA
Crosstalk	Deletion of non-selected RGB source	From 0 to 5 MHz	50			dB

4.5.6 FBOSD/HC Inputs

Symbol	Parameter	Test Conditions	Min.	Typ.	Max.	Unit
V_{THFB1A}	OSD Insertion Threshold Voltage	Half Contrast disable Register 08hex d6 = 0	0.5	0.7	0.85	V
V_{THFB1B}	OSD Insertion Threshold Voltage	Half Contrast enable Register 08hex d6 = 1	1.5	1.9	2.3	V
V_{TH-HC}	Half Contrast Threshold Voltage	Half Contrast enable Register 08hex d6 = 1	0.5	0.7	0.85	V
V_{THFB2}	Blanking Threshold Voltage,	Oversize Blanking active Register 08hex, d7 = 1	3.2	4	4.8	V
t_{SWI1}	Insertion Switching Delay			20	40	ns
t_{SWI2}	Blanking Switching Delay	From FBOSD = 4V to starting of blanking falling edge at RGB outputs		100		ns
I_{FB}	Input current	0V at Pin FBOSD			10	µA

www.DataSheet4U.com

4.5.7 External RGB/YCrCb Inputs

Symbol	Parameter	Test Conditions	Min.	Typ.	Max.	Unit
V_{CLAMP}	Clamp Level	Max. Contrast		3.5		V
V_{RGB}	RGB Input Voltage			0.7	1	V_{PP}
V_{YCrCb}	YCrCb Input Voltage	100% color bar register 0Ahex d7d6 = 11 Y Cr Cb		 1 0.7 0.7		V_{PP}
CRGB	RGB Gain	Max. Contrast, Max. Drive		4.28		-
Dblack	Difference of black level of internal and external signals at the RGB outputs	OSD signal versus internal signal			50	mV
I_{RGB}	Clamping Current		60	100	140	µA
Crosstalk	Deletion of non-selected RGB source	From 0 to 5 MHz	50			dB

4.5.8 External Fast Blanking Input

(See Note 8)

www.DataSheet4U.com

Symbol	Parameter	Test Conditions	Min.	Typ.	Max.	Unit
V_{THFB}	Insertion Threshold Voltage		0.5	0.7	0.85	V
t_{SWI}	Insertion Switching Delay			20	40	ns
I_{FB}	Input Current	0V at Pin FBEXT			10	µA
V_{MAX}	Max. voltage allowed at FBEXT input				5	V

Note 8: The FBEXT input must be connected to ground if not used in the application.

4.6 LUMA PART

4.6.1 Y Delay Line

Symbol	Parameter	Test Conditions	Min.	Typ.	Max.	Unit
t_{D1}	Delay Time PAL/NTSC	SVHS mode, Register 1F d3 = 0		520		ns
t_{D2}	Delay Time SECAM	SVHS mode, Register 1F d3 = 0		640		ns
t_{D3}	Delay Time PAL/NTSC	CVBS mode, Register 1F d3 = 0		560		ns
t_{D4}	Delay Time SECAM	CVBS mode, Register 1F d3 = 0		710		ns
t_{SHIFT}	Delay Time (lumDel1 - lumDel2)	lumDel1 = reg 1F d3 = 0, standard luma delay lumDel2 = reg 1F d3 = 1, shifted luma delay		140		ns
Groupdel	Group Delay up to 3.5MHz	Trap-off		±30		ns

4.6.2 Peaking Circuit

Electrical parameter measured with color identified

Symbol	Parameter	Test Conditions	Min.	Typ.	Max.	Unit
fPEAK	Center Frequency	Trap-off, coring ON	2.5	3	3.5	MHz
G_{PEAK}	Gain Variation from Min. to Max. peaking	At f_{PEAK}, coring ON		9		dB
Overshoot	Amplitude Variation compared to B/W amplitude	2T pulse, Max. peaking, coring ON		55		%

www.DataSheet4U.com

Symbol	Parameter	Test Conditions	Min.	Typ.	Max.	Unit
Pre-shoot	Amplitude Variation compared to B/W amplitude	2T pulse, Max. peaking, coring ON		40		%
Aft-shoot	Amplitude Variation compared to B/W amplitude	2T pulse, Max. peaking, coring ON		40		%
Coring	Coring Range compared to B/W	Coring ON		10		%

4.6.3 Black Stretch Control (Pin BS)

See Figure 12

Symbol	Parameter	Test Conditions	Min.	Typ.	Max.	Unit
BSth1	Black Stretch Threshold referred to B/W amplitude	Y/CVBS inputs: 0.7V B/W, No set-up		50		%
BSMax.	Maximum expansion referred to B/W amplitude	Y/CVBS inputs: 0.7V B/W, No set-up		-15		%
BSVMax.	Black Stretch Control Voltage	Max. black stretch		2.6		V
BSVMin.	Black Stretch Control Voltage	No black stretch		3.3		V
I100IRE	Discharging current	Y = 100IRE		8		µA
I0IRE	Charging Current	Y = 0IRE		35		µA

www.DataSheet4U.com

4.6.4 Y Output

Symbol	Parameter	Test Conditions	Min.	Typ.	Max.	Unit
Yout-DC	Black level			3.7		VBW
Yout-amp	Black to White Amplitude			0.7	0.99	V
Yout-BW	Luma Path Bandwidth	Peaking nominal SVHS mode/Trap-off CVBS, PAL/NTSC 4.43MHz CVBS, SECAM CVBS, PAL/NTSC 3.58MHz	 8 2.7 2.5 2.5	 3.5 3.1 3.0		MHz
Yout S/N	Signal to Noise Ratio (V_{PP}/V_{RMS})	Bandwidth 5MHz, Peaking Min.,coring ON	50			dB

4.7 FILTERS

4.7.1 Y Trap Filter

Symbol	Parameter	Test Conditions	Min.	Typ.	Max.	Unit
$f_{TRAP-PN}$	Notch Frequency	PAL/NTSC		f_{OSC}		MHz
f_{TRAP-S}	Notch Frequencies	SECAM fnb SECAM fnr		4.2 4.5		MHz
$f_{TRAP-ACC}$	Notch Frequency Accuracy				3.5	%
Q_{TRAP}	Trap Quality Factor	Q = 1/ (f0/f-3dB - f-3dB/f0), Peaking Min.		1.5		-
CrejPN	Color Subcarrier Rejection	PAL/NTSC	20			dB
CrejS	Color Rejection in SECAM Mode	From 4.1 to 4.6 MHz At 3.9 MHz	 10	20		dB

4.7.2 Chrominance Bandpass

Symbol	Parameter	Test Conditions	Min.	Typ.	Max.	Unit
f_{BP}	Center Frequency	Register 12h, d3-d0 = 0000	-5%	f_{OSC}	+5%	MHz
Q_{BP}	Bandpass Quality Factor		2.8	3.5	4.2	-

www.DataSheet4U.com

4.7.3 Bell Filter

Symbol	Parameter	Test Conditions	Min.	Typ.	Max.	Unit
f_{BELL}	Center Frequency	Register 11h, d4-d0 = 00000	4.27	4.29	4.31	MHz
Q_{BP}	Bell Quality Factor		14	16	18	-

4.8 CHROMA PART

4.8.1 ACC

Symbol	Parameter	Test Conditions	Min.	Typ.	Max.	Unit
G_{ACC}	ACC Control Range	Change of burst overall ACC control range < 2dB		26		dB
$V_{Min.}$	Minimum Burst Signal Amplitude	Within the ACC control range		0.03		V_{PP}

4.8.2 ACC Overload

Symbol	Parameter	Test Conditions	Min.	Typ.	Max.	Unit
V_{TH}	Chroma regulation Threshold	ACC overload ON, PAL/NTSC		3		dB

4.8.3 Killer

www.DataSheet4U.com

Symbol	Parameter	Test Conditions	Min.	Typ.	Max.	Unit
Ident-kill	Color on Threshold of ident. circuit	Burst amplitude on selected CVBS input		5		mV_{PP}
Kill-Hyst	Color off Killer Hysteresis	Strong signal condition, S/N > 40 dB		2		mV_{PP}

4.8.4 Chroma PLL

Symbol	Parameter	Test Conditions	Min.	Typ.	Max.	Unit
CaptR	Catching Range	With recommended crystal and recommended CLPF filter value.	±300			
HoldR	Holding Range		> or = to capture range			

4.8.5 PLL Loop Filter (PAL/NTSC)

Symbol	Parameter	Test Conditions	Min.	Typ.	Max.	Unit
I_C	Maximum Control Current	Color search mode (colour not ident.) Color identified		1000 350		µA
I_L	Leakage Current				5	µA
Frange-W	Auto Flesh Control	Register 14(HEX), d6 = 1, d7 = 1		±90		Deg

4.8.6 Hue Control

Symbol	Parameter	Test Conditions	Min.	Typ.	Max.	Unit
R_{HUE}	Hue Control Range		±35	±45	±55	Deg

4.8.7 Automatic Flesh Control

Symbol	Parameter	Test Conditions	Min.	Typ.	Max.	Unit
FleshNom.	Nominal Flesh Tint Phase			118		Deg
Fcorr0	Phase Correction when Auto Flesh ON	At FleshNom		0		Deg
FMax.-N	Maximum Phase Correction	Register 14(HEX), d6 = 1, d7 = 0		±10		Deg
Flesh-N	Chroma Input Phase at Max. correction	Register 14(HEX), d6 = 1, d7 = 0		±30		Deg
Frange-N	Auto Flesh Control Range	Register 14(HEX), d6 = 1, d7 = 0		±60		Deg

www.DataSheet4U.com

Symbol	Parameter	Test Conditions	Min.	Typ.	Max.	Unit
FMax.-W	Maximum Phase Correction	Register 14(HEX), d6 = 1, d7 = 1		±20		Deg
Flesh-W	Chroma Input Phase at Max. correction	Register 14(HEX), d6 = 1, d7 = 1		±45		Deg
Frange-W	Auto Flesh Control	Register 14(HEX), d6 = 1, d7 = 1		±90		Deg

4.8.8 Color Demodulators

Symbol	Parameter	Test Conditions	Min.	Typ.	Max.	Unit
DoffsetP	Demodulator Offset	PAL/NTSC mode, 75% color bar			±2	%
DoffsetS	Demodulator Offset	SECAM mode, 75% color bar			±2	%
PhaseErr	Phase Error in demodulated signal	PAL/NTSC mode, 90% matrix			5	Deg
TransPal	Chroma Transient Time	PAL mode, 75% color bar green-magenta transient		700		ns
transSEC	Chroma Transient Time	SECAM mode, 75% color bar green-magenta transient		900		ns
Naxis	R-Y Demodulation Axis	NTSC mode, 104° matrix		104		Deg

4.8.9 Chroma Delay Line

www.DataSheet4U.com

Symbol	Parameter	Test Conditions	Min.	Typ.	Max.	Unit
Cdelay	Delay of delayed signals	Relative to non delayed signal	63.9	64	64.1	µs
Ctrans	Difference of transient times between delayed and non delayed signals	SECAM mode. t_{RN} -t_{RN+1} t_{RN}: rise time line N (direct) t_{RN+1}: rise time line N +1 (delayed)			150	ns
Dgain	Differential Gain of delayed signals versus direct signals	SECAM mode. Gn+1/Gn Gn: direct channel gain Gn+1: delayed channel gain	-0.5	0	0.5	dB

4.8.10 Chroma Reference Output

Symbol	Parameter	Test Conditions	Min.	Typ.	Max.	Unit
CHR-amp	Chroma VCO Reference Signal Amplitude			0.4		V_{PP}
I_{SCHR}	Sink Current			0.5		mA

4.9 SCANNING PART

4.9.1 Synchronization Separator

Symbol	Parameter	Test Conditions	Min.	Typ.	Max.	Unit
V_{SYNC}	Synchronization Pulse Amplitude		50	300	450	mV

4.9.2 Horizontal Oscillator

Symbol	Parameter	Test Conditions	Min.	Typ.	Max.	Unit
f_{H50}	Horizontal Frequency	50 Hz mode		15.6		kHz
f_{H60}	Horizontal Frequency	60 Hz mode		15.7		kHz
f_{RANGE}	Frequency Control Range	Low Frequency High Frequency	14.7 15.9	15.0 16.3	15.3 —	kHz
f_{FREE}	Free Frequency when PLL1 opened		15.3	15.6	15.9	kHz

www.DataSheet4U.com

4.9.3 First Loop Filter

Symbol	Parameter	Test Conditions	Min.	Typ.	Max.	Unit
I_{LOW}	Long Time Constant Output Current		0.10	0.13	0.16	mA
I_{HIGH}	Short Time Constant Output Current		0.30	0.40	0.56	mA
I_{VLOW}	Very Long Time Constant		0.03	0.05	0.07	mA

4.9.4 Second Loop Filter

Symbol	Parameter	Test Conditions	Min.	Typ.	Max.	Unit
CrangeP2	Control Range from start of horizontal output to flyback pulse	Centered horizontal position		0 to 12		µs
H_{SHIFT}	Horizontal Position Control Range		5	5.25		µs
H_{DRIFT}	Horizontal Drift with temperature	From 0°C to 70°C (see Note 9)			200	ns

Note 9: This parameter is not tested during production, it is tested during the qualification phase.

4.9.5 Line Flyback Input/Super-Sandcastle Output

www.DataSheet4U.com

Symbol	Parameter	Test Conditions	Min.	Typ.	Max.	Unit
V_{BURST}	Output Voltage during Burst Key		4.8	5.3	5.8	V
V_{LINE}	Clamped Input Voltage during Line Flyback		2.6	3	3.4	V
V_{VERT}	Output Voltage during Vertical pulse		1.8	2	2.2	V
Twbg	Burst key Pulse Width			3.8		µs
Tdbg	Delay of start of burst key to start of sync.			5.2		µs
Tvert	Vertical Pulse Width			10.5		lines
V_{THLINE}	PLL2 and Line Blanking Threshold Voltage referred to line level Vline	Vthline/Vline		83		%
I	Input Current		0.1		1	mA

4.9.6 Horizontal Output

Symbol	Parameter	Test Conditions	Min.	Typ.	Max.	Unit
t_W	Output Pulse Width		26	28	30	µs
V_{LOW}	Low Output Voltage	I_{SINK} = 5mA			0.4	V
$V_{CCSTART}$	V_{CC} Start Level		5.5	6	6.5	V
V_{CCSTOP}	V_{CC} Stop Level Hysteresis	$V_{CCSTART}$ - V_{CCSTOP}	0.5	0.6	0.7	V
$I_{Max.}$	Maximum allowed Output Current				10	mA
$V_{Max.}$	Maximum allowed Output Voltage				10	V
Tss	Output Pulse Duty Cycle in soft-start mode ($t_{HIGH}/(t_{HIGH}+t_{LOW})$)			75		%

4.9.7 Vertical Output

Symbol	Parameter	Test Conditions	Min.	Typ.	Max.	Unit
t_W	Output Pulse Width			10.5		Lines
V_{LOW}	Low Output Voltage	Reg 19, d0 = 1 Reg 19, d0 = 0	1.5	2 0.1	2.5 0.5	V
f_{LOCK}	Looking Range		248		352	Lines
$f_{FREE-50}$	Free Frequency (no Video signal)	50-Hz Forced or 50-Hz Auto mode		314		Lines
$f_{FREE-60}$	Free Frequency (no Video signal)	60-Hz Forced or 60-Hz Auto mode		264		Lines

www.DataSheet4U.com

Symbol	Parameter	Test Conditions	Min.	Typ.	Max.	Unit
V_{HIGH}	High Level Range Vertical Position Control	Min. position control Max. position control	3.5 6.0	4 6.5	4.5 7.0	V
I_{SINK}	Output Sinking Current		0.7	1.0		mA
I_{SOURCE}	Output Source Current		0.7	1.0		mA

4.9.8 Vertical Amplitude Control

Symbol	Parameter	Test Conditions	Min.	Typ.	Max.	Unit
V_{AMP}	Output Voltage Range	Min. amplitude voltage Max. amplitude voltage	1.2 5.5	1.5 6.0	1.7 6.5	V

4.9.9 Crystal Detection

Symbol	Parameter	Test Conditions	Min.	Typ.	Max.	Unit
$R_{4.43}$	Load resistance at pin VAMP	4.43 MHz crystal on pin XTAL1	80			kΩ
$R_{3.58}$	Load resistance at pin VAMP	3.58 MHz crystal on pin XTAL1			10	kΩ

4.10 RGB CONTROL PART

www.DataSheet4U.com

4.10.1 Y Input

Symbol	Parameter	Test Conditions	Min.	Typ.	Max.	Unit
YINdc	Black Level			3.7		V
Yin-B/W	Black to White Amplitude			0.7	1	V
Yin-cur	Input Current				1	µA

4.10.2 U & V Inputs

Symbol	Parameter	Test Conditions	Min.	Typ.	Max.	Unit
UVin-dc	Black Level			3.7		V
Uin-amp	B-Y Amplitude	75% color bar PAL/SECAM		1.33	2.0	V_{PP}
Vin-amp	R-Y Amplitude	75% color bar PAL/SECAM		1.05	2.0	V_{PP}
UVin-cur	Input Current				1	µA

4.10.3 Contrast Control

Symbol	Parameter	Test Conditions	Min.	Typ.	Max.	Unit
Yctr	Contrast Range on Y signal		21	24	27	dB
OSDctr	Contrast Range on OSD RGB signal		10	12	14	dB

4.10.4 Saturation Control

Symbol	Parameter	Test Conditions	Min.	Typ.	Max.	Unit
$SAT_{Max.}$	Maximum Saturation Control	75% color bar PAL/SECAM, 0 dB for data 20 in reg 08	6	9	12	dB
$SAT_{Min.}$	Minimum Saturation Control	75% color bar PAL/SECAM, 0 dB for data 20 in reg 08		-40		dB

www.DataSheet4U.com

4.10.5 Brightness Control

Symbol	Parameter	Test Conditions	Min.	Typ.	Max.	Unit
Bright	Brightness Control Range referred to B/W amplitude on RGB outputs	At Max. Contrast, APR OFF	50	60	70	%
Blacknom	Nominal Black Level at RGB outputs. Difference between black level V_{BLACK} and inserted cut-off pulse level V_{CO}: V_{BLACK} - V_{CO}	BS mode, Max. Contrast. (V_{BLACK} - V_{CO})/V_BW V_BW: black to white amplitude at RGB outputs.		-12		%

4.10.6 RGB Matrix

Symbol	Parameter	Test Conditions	Min.	Typ.	Max.	Unit
G/R	(G-Y)/(R-Y)	PAL/SECAM matrix measured on R, G outputs PAL DEMpattern	-0.40	-0.51	-0.62	-
G/B	(G-Y)/(B-Y)	PAL/SECAM matrix measured on G, B outputs PAL DEMpattern	-0.15	-0.19	-0.23	-
R/Bntsc	(R-Y)/(B-Y)	NTSC mode, 104° matrix input signal: U = V measured on R, B outputs		0.9		-
G/Rntsc	(G-Y)/(R-Y)	NTSC mode, 104° matrix		-0.29		-
G/Bntsc	(G-Y)/(B-Y)	NTSC mode, 104° matrix		-0.22		-

www.DataSheet4U.com

4.10.7 Drive Adjustment (White Point Adjustment)

Symbol	Parameter	Test Conditions	Min.	Typ.	Max.	Unit
WPrange	White Point Adjustment Range	On RGB outputs		6		dB

4.10.8 Cut-Off Adjustment (Black Point Adjustment)

Symbol	Parameter	Test Conditions	Min.	Typ.	Max.	Unit
COadjust	Cut-off Adjustment Range	On Red and green outputs at Typ. drive, no load		420		mV
COloop	Cut-off Loop Range	On RGB outputs	2	2.5		V
COlevel	Inserted Cut-off Level		1.5	2.5	3.5	V

4.10.9 Cathode Current Input

Symbol	Parameter	Test Conditions	Min.	Typ.	Max.	Unit
V_{LEAK}	Leakage Current Reference Voltage			3.75	4	V
V_{COFF}	Cut-off Current Reference Voltage referred to leakage current reference V_{LEAK}		210	250	290	mV
V_{SBEAM}	Start Beam Current Detection Reference Voltage		4.1	4.3		V
I_{SOURCE}	Source Current		150			µA

4.10.10 Beam Current Limiter Input

See Figure 14 on page 42 and Figure 15 on page 42.

Symbol	Parameter	Test Conditions	Min.	Typ.	Max.	Unit
V_{TH1}	Contrast Attenuation Starting			5.75		V
V_{TH2}	Brightness Attenuation Starting			5.5		V
V_{TH3}	Contrast Attenuation Ending			5.25		V
CTRbcl	Contrast Attenuation at V_{TH3}			14		dB
V_{TH4}	Brightness Attenuation Ending			4.5		V

www.DataSheet4U.com

Symbol	Parameter	Test Conditions	Min.	Typ.	Max.	Unit
BRIGbcl	Brightness Attenuation at V_{TH4}		100			%
Clp	High Clamping Voltage		6.5			V
SAF-thr	Safety Threshold		0.8	1	1.2	V
SAF-hold	Supply Hold Voltage	Referred to V_{CC1}	3			V

4.10.11 Automatic RGB Peak Regulation (APR) / RGB Peak Limitation

See Figure 16 on page 42.

Symbol	Parameter	Test Conditions	Min.	Typ.	Max.	Unit
APR/RGB Peak	Maximum Output Level on RGB outputs when APR/RGB Peak Limitation ON	WR10 d0 = 1 Contrast Max., drive Max., no load APR threshold Min. (50IRE) APR threshold 70IRE APR threshold Max. (100IRE) (see Note 10)		2.14 3.0 4.28		V
i_{APR-D}	Discharging Current			5.5		µA
i_{APR-C}	Charging Current			5.25		mA
G_{APRMAX}	APR max gain	APR ON = WR10 d0 = 1 RGB output amplitude with APR ON versus RGB output amplitude with APR OFF		+2.5		dB
G_{APRMIN}	APR min gain	APR ON = WR10 d0 = 1 RGB output amplitude with APR ON versus RGB output amplitude with APR OFF		-3.0		dB

Note 10: At maximum contrast, APR and RGB peak limitation have the same characteristics. The APR regulation level is tracked on contrast. The RGB peak limitation level is not tracked on contrast.

www.DataSheet4U.com

4.10.12 RGB Outputs

Symbol	Parameter	Test Conditions	Min.	Typ.	Max.	Unit
VB/W	Output Signal Amplitude B/W	0.7V B/W on Y/CVBS inputs, Contrast Max., Drive Max., Saturation and bright Nom., APR OFF, no load		2.8		V
V_{BLUE}	Output Signal Amplitude	75/100 color bar, no Y nom. settings, APR OFF, no load		1.5		V_{PP}
I_{SINK}	Output Sinking Current		1.2	1.5		mA
I_{SOURCE}	Output Source Current				1.8	mA
R_{OUT}	Internal Output Resistance			150		Ω
V_{BLANK}	Blanking Level	No load		0.2	0.4	V
V_{CLIP}	High Clipping Level	No load		6.8		V
Black-ctr	Variation of black level with contrast				30	mV
Black-sat	Variation of black level with saturation				50	mV
Rel-Black	Relative Variation in black level between the three channels	20dB contrast variation Overall brightness range ±5% V_{CC1}			20	mV
Black-T	Black Level Thermal Drift			1		mV/°C
Track	Tracking between Luminance and Chrominance signals	At typical saturation From Max. Contrast (0 dB) to -10 dB Contrast			2	dB
Bwidth	Bandwidth of output signals at -3dB	YUV inputs to RGB outputs OSD RGB inputs to RGB outputs EXT. RGB inputs to RGB outputs	6 6 5	8 8 6		MHz

www.DataSheet4U.com

Figure 12. Black Stretch Static Characteristics (IRE)

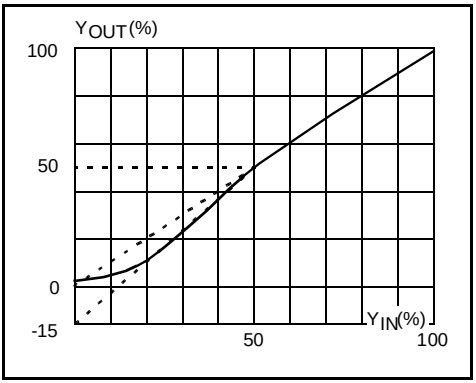

Figure 13. Auto Flesh Characteristics

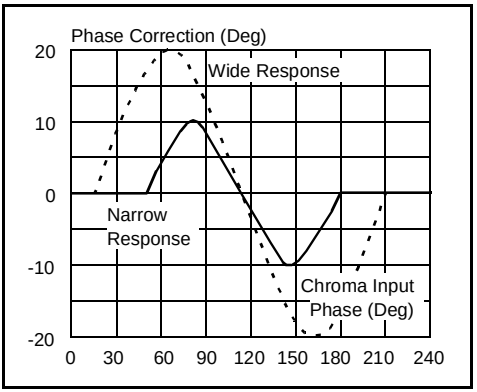

www.DataSheet4U.com

Figure 14. Beam Current Limiter Characteristics (Contrast)

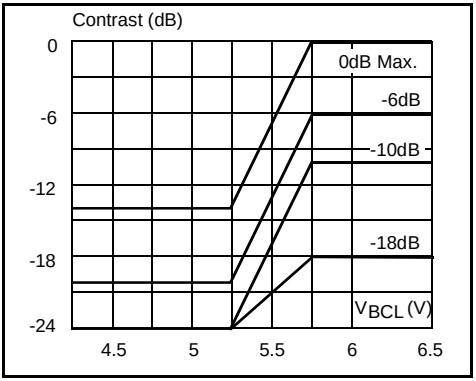

Figure 15. Beam Current Limiter Characteristics (Brightness)

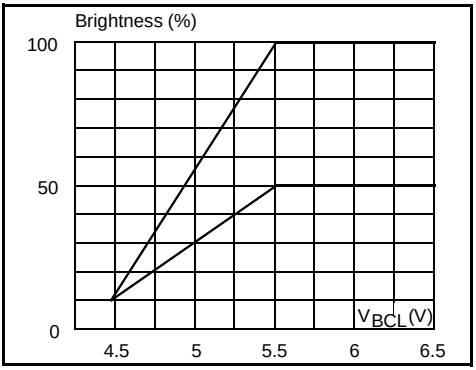

Figure 16. Automatic RGB Peak Regulation (APR) / RGB Peak Limitation Characteristics

www.DataSheet4U.com

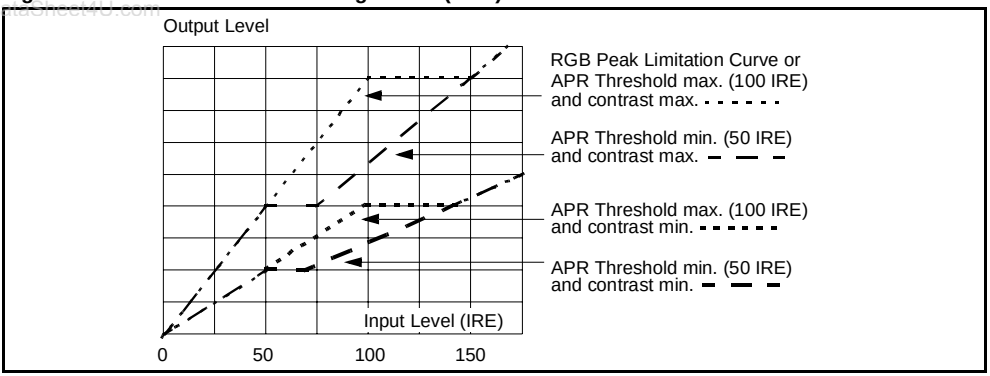

Figure 17. Linear Volume Control Curve (7 bits, reg. 05 d6-d0, reg. 05 d7 = 0)

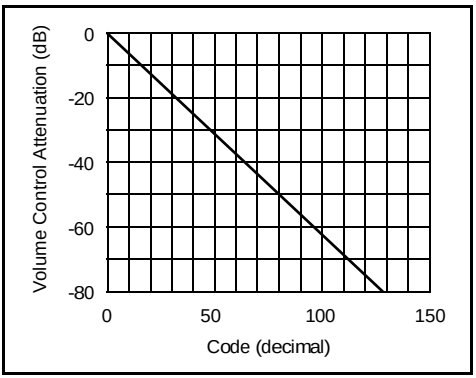

Figure 18. Non-Linear Volume Control Curve (6 bits, reg. 05 d6-d1, reg. 05 d7 = 1)

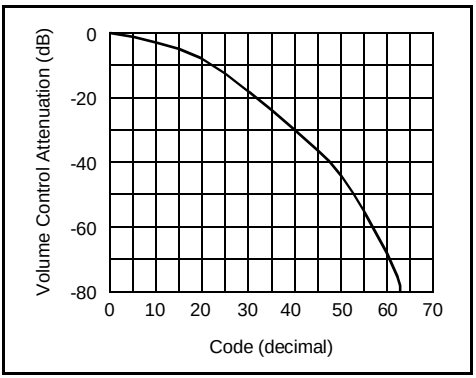

www.DataSheet4U.com

4.11 I²C BUS CHARACTERISTICS

4.11.1 SCL

Symbol	Parameter	Test Conditions	Min.	Typ.	Max.	Unit
V_{IL}	Low Level Input Voltage		-0.5		1.5	V
V_{IH}	High Level Input Voltage		3		V_{CC}+0.5	V
I_{LI}	Input Leakage Current	V_{IN} = 0 to V_{CC}	-10		10	µA
f_{SCL}	Clock Frequency		0		100	kHz
t_R	Input Rise Time	1.5V to 3V			1.000	ns
t_F	Input Fall Time	1.5V to 3V			300	ns
C_I	Input Capacitance				10	pF

4.11.2 SDA

Symbol	Parameter	Test Conditions	Min.	Typ.	Max.	Unit
V_{IL}	Low Level input Voltage		-0.5		1.5	V
V_{IH}	High Level input Voltage		3		V_{CC}+0.5	V
I_{LI}	Input Leakage Current	V_{IN} = 0 to V_{CC}	-10		10	µA
C_I	Input Capacitance				10	pF
t_R	Input Rise Time	1.5V to 3V			1.000	ns
t_F	Input Fall Time	1.5V to 3V			300	ns
V_{OL}	Low Level Output Voltage	I_{OL} = 3mA			0.4	V
t_F	Output Fall Time	3V to 1.5V			250	ns
C_L	Load Capacitance				400	pF
C_I	Input Capacitance				10	pF

www.DataSheet4U.com

4.11.3 I²C Timing

Symbol	Parameter	Test Conditions	Min.	Typ.	Max.	Unit
t_{LOW}	Clock Low period		4.7			µs
t_{HIGH}	Clock High period		4			µs
$t_{SU,DAT}$	Data Set-up Time		250			ns
$t_{HD,DAT}$	Data Hold Time		0		340	ns
$t_{SU,STO}$	Set-up Time from Clock High to Stop		4			µs
t_{BUF}	Start Set-up Time following a Stop		4.7			µs
$t_{HD,STA}$	Start Hold Time		4			µs
$t_{SU,STA}$	Start Set-up Time following Clock Low to High Transition		4.7			µs

Figure 19. I²C Bus Timing

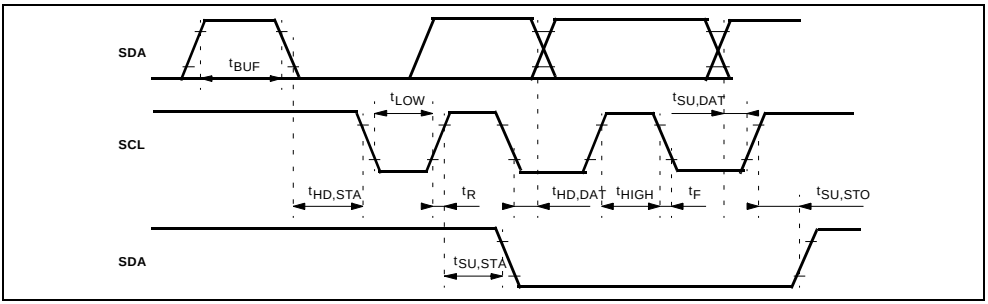

www.DataSheet4U.com

5 I²C BUS SPECIFICATIONS

Data transfers follow the usual I²C format: after the start condition (S), a 7-bit slave address is sent, followed by an eighth bit which is a data direction bit (W). An 8-bit sub-address is sent to select a register, followed by an 8-bit data word to be included in the register.

The IC's I²C bus decoder permits the automatic incrementation mode in write mode.

The circuit operates up to clock frequencies of 400 kHz.

String Format

Write only mode (S = start condition, P = stop condition, A = acknowledge)

S	SLAVE ADDRESS	0	A	SUB-ADDRESS	A	DATA	A	P

Read only mode

S	SLAVE ADDRESS	1	A	DATA 0	A	DATA 1	A	DATA 2	A	DATA 3	A	P

Slave Address

Address	A7	A6	A5	A4	A3	A2	A1	A0
Value	1	0	0	0	1	0	1	X

Write Address: 10001010

Read Address: 10001011

www.DataSheet4U.com

www.DataSheet4U.com

6 I²C BUS SELECTION

6.1 SUMMARY INPUT SIGNALS (WRITE MODE)

“Not-to-be-used” data must be set to “0”.

Reg. Addr. (Hex)	Data D7	Data D6	Data D5	Data D4	Data D3	Data D2	Data D1	Data D0
00	PIFVCO Free Running Fine Adjustment							Not to be used
01	PIF Over-modu-lation	AFC Defeat	L/L’ Mode	NEG/POS Modulation	PIFVCO Free Running Coarse Adjustment			
02	CVBS Out-put	Overmodu-lation Reset	Not to be used	INTCVBS Output Amplitude Adjustment				
03	Tuner AGC gain		Tuner AGC Starting Point Adjustment					
04	Intercarrier Filter ON/ OFF	QSS and AM demod defeat	FM/AM Output Selection (Note 1)	FM Demod. Defeat	FM Deviation and FM De-emphasis, Audio FM Wide mode (Note 1)		Main Audio Output selection (int./ext.)	
05	Volume Control Curve	Volume Control						
06	Not to be used	QSS/ Inter-carrier	CVBS Mute	Not to be used (SDIP56) SAW Filter Switch (TQFP64)	AGC SIF Time Con-stant	Sound Standard Selection		PIF VCO compensa-tion
07	Blue Screen	RGB Peak Limitation (Note 2)	Contrast					
08	Oversize Blanking	Half Contrast	Saturation					
09	CO Blanking	RGB Blanking	Brightness					
0A	RGBext/YCrCb Insertion (Note 2)		Red Drive Adjustment					
0B	NTSC Set-up	Black Stretch	Green Drive Adjustment					
0C	LSB RED Cut-off Counter	CO Freeze	Blue Drive Adjustment					
0D	Manual Cut-off Selection		Red Cut-off Adjustment					
0E	LSB GREEN Cut-off Counter	Not to be used	Green Cut-off Adjustment					
0F	White inser-tion ON/OFF	CVBS2 ON/OFF	Chroma Trap ON/ OFF (Note 1)	Coring ON/OFF	Peaking			
10	White Insertion (Note 2)	CRT/LCD Display	RGBosd Contrast Selection	APR Threshold				APR on/off

www.DataSheet4U.com

www.DataSheet4U.com

Reg. Addr. (Hex)	Data D7	Data D6	Data D5	Data D4	Data D3	Data D2	Data D1	Data D0
11	ACCO ON/OFF	NTSC 104 Matrix	PAL/NTSC Demod. Gain	Bell Filter Shift				
12	Not to be used		Chroma DL ON/OFF	Chroma Out ON/OFF	Bandpass Shift			
13	Not to be used		Crystal Input Pin Disable	Chroma Standard Selection		Crystal Selection		3rd Crystal
14	Flesh Char.	Flesh ON/OFF	Hue					
15	Safety Reset	Not to be used		SVHS switch	Second Video Switch Control		Main Video Switch Control	
16	Interlace	HOUT Disable	Horizontal Shift					
17	50/60Hz Selection		Vertical Amplitude					
18	Vertical Sync ON/OFF	Line Sync ON/OFF	PLL1 Time Constant		Vertical Position			
19	AV Mode Time Constant (Note 2)	Copy Protection Mode (Note 2)	Wide Line Blanking (Note 2)	Not to be Used	Noise Detector Threshold		Long Blanking	Vertical Output Low Level Control
1A	Manual Cut-off Register - Red							
1B	Manual Cut-off Register - Green							
1C	Manual Cut-off Register - Blue							
1D	CVBS1out							
1E	Not to be used			AGC SIF Time Constant	Not to be used			
1F	Audio Out (Mono or Sound subcarriers)		AVL		Luma Delay Shift	Not to be used	Sound Status Refresh	VERT Output Inhibition

Note 1: Specification changed versus STV223XD/224XC.
Note 2: New feature versus STV223XD/224XC.

6.2 SUMMARY OUTPUT SIGNALS (READ MODE)

Reg. Addr. (Hex)	Data D7	Data D6	Data D5	Data D4	Data D3	Data D2	Data D1	Data D0
00	Chroma Standard Selection Status		Crystal Selection Status		Video Ident. Status	Field Lock Status	50/60 Hz Status	Power ON Reset
01	FM Dem. VCO Cal. Status	Scanning VCO Cal. Status	Test Not to be Used	FBext Detection	Safety Status	Horizontal Lock Status	Noise Detector Status	SVHS Status
02	Cut-off loop status		FM Sound Carrier Levels			Digital AF Status		
03	Tuner AGC Output Status or AVL Gain Status	IC Identification						

www.DataSheet4U.com

6.3 INPUT SIGNALS (WRITE MODE)

Not used data bits must be set to “0”.

6.3.1 PIFVCO Free Running

Reg. Addr. (Hex)	Description	Bits	Data								Comments
			d7	d6	d5	d4	d3	d2	d1	d0	
00	PIFVCO Free Running Fine Adjustment	7	0 1 1	0 0 1	0 0 1	0 0 1	0 0 1	0 0 1	0 0 1	X X X	PIF Typical + 0.7 MHz. PIF Free Running mid range. PIF Typical - 0.7 MHz.
	Not to be used	1	X	X	X	X	X	X	X	0	

6.3.2 PIF Free Running Coarse

Reg. Addr. (Hex)	Description	Bits	Data								Comments
			d7	d6	d5	d4	d3	d2	d1	d0	
01	PIFVCO Free Running Coarse Adjustment for 38.9 MHz Carrier	4	X X X	X X X	0 0 0	X X X	0 0 1	0 1 1	0 1 1	0 1 1	PIFVCO = F0 + 2.0 MHz. PIFVCO = F0 (mid range). PIFVCO = F0 - 1.8 MHz.
	PIFVCO Free Running Coarse Adjustment for 33.9 MHz Carrier (L’)	4	X X X	X X X	1 1 1	1 1 1	0 0 1	0 1 1	0 1 1	0 1 1	PIFVCO = F0 + 1.3 MHz. PIFVCO = F0 (mid range). PIFVCO = F0 - 1.2 MHz.
	PIF Modulation	1	X X	X X	X X	0 1	X X	X X	X X	X X	0 = Negative Modulation. 1 = Positive Modulation.
	L/L’ Standard Selection	1	X X	X X	0 1	1 1	X X	X X	X X	X X	0 = L Standard. 1 = L’ Standard.
	Digital AFC Defeat	1	X X	0 1	X X	X X	X X	X X	X X	X X	0 = AFC Active. 1 = AFC Defeat (read register 02, d2 d1 d0 = 000).
	PIF Over-modulation	1	0 1	X X	X X	X X	X X	X X	X X	X X	0 = Over-modulation detection off. 1 = Over-modulation regulation active.

www.DataSheet4U.com

6.3.3 PIF Features

Reg. Addr. (Hex)	Description	Bits	Data								Comments
			d7	d6	d5	d4	d3	d2	d1	d0	
02	CVBS Output Amplitude	5	X X X	X X X	X X X	0 1 1	0 0 1	0 0 1	0 0 1	0 0 1	$V_{Typ.}$ - 1.6 dB. $V_{Typ.}$ = 1.6 V (black / white). $V_{Typ.}$+ 1.5 dB.
	Not to be used	1	X	X	0	X	X	X	X	X	
	Overmodulation Reset	1	X X	0 1	X X	X X	X X	X X	X X	X X	0 = Normal Operating Mode 1 = Overmodulation Reset
	CVBS Output	1	0 1	X X	X X	X X	X X	X X	X X	X X	0 = 2 $_{VPP}$, no external sound trap. 1 = 2.3 $_{VPP}$, external sound trap.

www.DataSheet4U.com

6.3.4 Tuner Delay

Reg. Addr. (Hex)	Description	Bits	Data								Comments
			d7	d6	d5	d4	d3	d2	d1	d0	
03	Tuner AGC Starting Point Adjustment	6	X	X	0	0	0	0	0	0	Min. Start point 2 mV_{RMS} at PIF input.
			X	X	1	0	0	0	0	0	Typ. Start point 12 mV_{RMS} at PIF input.
			X	X	1	1	1	1	1	1	Max. Start point 80 mV_{RMS} at PIF input
	Tuner AGC Gain	2	0	0	X	X	X	X	X	X	50 µA/dB.
			0	1	X	X	X	X	X	X	95 µA/dB.
			1	0	X	X	X	X	X	X	170 µA/dB.
			1	1	X	X	X	X	X	X	270 µA/dB.

6.3.5 SIF Features and Audio Switches

Reg. Addr (Hex)	Description	Bits	Data								Comments
			d7	d6	d5	d4	d3	d2	d1	d0	
04	Main Audio Output	2	X	X	X	X	X	X	0	0	FM/AM audio selected.
			X	X	X	X	X	X	0	1	External audio selected.
			X	X	X	X	X	X	1	X	MUTE selected.
	FM De-emphasis Switch and FM deviation range control	2	X	X	X	X	0	0	X	X	Automatic control, according to sound standard.
			X	X	X	X	0	1	X	X	De-emphasis at 75 µs and FM deviation at ±25 kHz.
			X	X	X	X	1	0	X	X	De-emphasis at 50 µs and FM deviation at ±50 kHz.
			X	X	X	X	1	1	X	X	Audio FM Wide mode &50 µs De-emphasis (BGDKI). To be used with 224xH version only in QSS architecture.
	FM Demodulator defeat	1	X	X	X	0	X	X	X	X	0 = FM Demodulator active.
			X	X	X	1	X	X	X	X	1 = FM Demodulator defeat, FM out muted.
	AM/FM output selection	1	X	X	0	X	X	X	X	X	0 = FM output selected.
			X	X	1	X	X	X	X	X	1 = AM output selected and FM demod OFF.
	QSS and AM demodulator defeat	1	X	0	X	X	X	X	X	X	0 = QSS and AM demod active,
			X	1	X	X	X	X	X	X	1 = QSS and AM demod not active (OFF)
	Intercarrier filter ON/OFF	1	0	X	X	X	X	X	X	X	0 = Intercarrier filter ON
			1	X	X	X	X	X	X	X	1 = Intercarrier filter OFF
05	Volume Control Attenuation, Linear curve (dB)	7	0	0	0	0	0	0	0	0	Attenuation = 0 dB.
			0	1	1	1	1	1	1	1	Attenuation = 78 dB. 7-bit resolution.
	Volume Control Attenuation, Non-linear curve (d0 = 0, d7 = 1)	6	1	0	0	0	0	0	0	0	Attenuation = 0 dB.
			1	1	1	1	1	1	1	0	Attenuation = 78 dB. 6-bit resolution.

www.DataSheet4U.com

www.DataSheet4U.com

Reg. Addr (Hex)	Description	Bits	Data								Comments
			d7	d6	d5	d4	d3	d2	d1	d0	
06	PIF VCO Compen-sation	1	X X	X X	X X	X X	X X	X X	X X	0 1	0 = Optimized for PIF from 33.9 to 38.9 MHz 1 = Optimized for PIF 45.75 & 58.75 MHz
	Sound Standard Selection	2	X X X X	X X X X	X X X X	X X X X	X X X X	0 0 1 1	0 1 0 1	X X X X	6.5 MHz sound selected. 6.0 MHz sound selected. 5.5 MHz sound selected. 4.5 MHz sound selected.
	AGC SIF time constant (AM)	1	X X	X X	X X	X X	0 1	X X	X X	X X	0 = Auto Time constant. 1 = Fast Time constant forced.
	SAW filter switch output	1	X X	X X	X X	0 1	X X	X X	X X	X X	0 = output low (0.4 V Max.). 1 = output high (4 V Min.).
	CVBS output (from PIF circuit)	1	X X	X X	0 1	X X	X X	X X	X X	X X	0 = CVBS output enable. 1 = CVBS output muted.
	QSS/Inter-carrier Application	1	X X	0 1	X X	X X	X X	X X	X X	X X	0 = QSS application, intercarrier filter OFF 1 = Intercarrier application
	Not to be used	1	0	X	X	X	X	X	X	X	

6.3.6 Video Controls

www.DataSheet4U.com

Reg. Addr (Hex)	Description	Bits	Data								Comments
			d7	d6	d5	d4	d3	d2	d1	d0	
07	Contrast Control	6	X X	X X	0 1	0 1	0 1	0 1	0 1	0 1	-24 dB gain (Min. contrast). 0 dB gain (Max. contrast).
	RGB Peak Limitation	1	X X	0 1	X X	X X	X X	X X	X X	X X	0 = APR, APR Threshold, tracked with contrast. 1 = RGB Peak Limitation, threshold not tracked with contrast. Note: RGB Peak Limitation active when WR10 d0 = 1
	Blue Screen Feature	1	0 1	X X	X X	X X	X X	X X	X X	X X	0 = Blue screen OFF. 1 = Blue screen ON.
08	Saturation Control	6	X X	X X	0 1	0 1	0 1	0 1	0 1	0 1	-40 dB gain (Min. saturation). +9 dB gain (Max. saturation).
	Half Contrast Ena-ble	1	X X	0 1	X X	X X	X X	X X	X X	X X	0 = Disabled. 1 = Enabled.
	Oversize Blanking Enable	1	0 1	X X	X X	X X	X X	X X	X X	X X	0 = Disabled. 1 = Enabled.
09	Brightness Control	6	X X	X X	0 1	0 1	0 1	0 1	0 1	0 1	-30% of B/W at Max. contrast. +30% of B/W at Max. contrast.
	RGB Blanking	1	X X	0 1	X X	X X	X X	X X	X X	X X	0 = Not active (normal operation). 1 = Active.
	Cut-off Blanking	1	0 1	X X	X X	X X	X X	X X	X X	X X	0 = Enable: RGB output blanked when I_{CATH} voltage is far from internal cut-off reference (cut-off loop not locked), during IC start-up. 1 = Disable: RGB output not blanked by cut-off loop.

www.DataSheet4U.com

Reg. Addr (Hex)	Description	Bits	Data								Comments
			d7	d6	d5	d4	d3	d2	d1	d0	
0A	Red Drive Adjust (White Point R)	6	X X	X X	0 1	0 1	0 1	0 1	0 1	0 1	-6 dB gain (Min. drive). 0 dB gain (Max. drive).
	RGBext/YCrCb Selection	2	0 0 1 1	0 1 0 1	X X X X	X X X X	X X X X	X X X X	X X X X	X X X X	RGB ext. insertion enable controlled by FBext input pin. RGB ext. insertion disable, FBext control disable. RGB ext. insertion forced (FBext not active). YCrCb insertion forced. if WR0F d5 = 0 : Y on Gext (Luminance input) and CVBSin (for synchro). if WR0F d5 = 1 : Y on CVBSin (for luminance and synchro), Cr on Rext, trap and luma delay disabled.
0B	Green drive adjustment (white point G)	6	X X	X X	0 1	0 1	0 1	0 1	0 1	0 1	-6 dB gain (Min. drive). 0 dB gain (Max. drive).
	Black stretch enable	1	X X	0 1	X X	X X	X X	X X	X X	X X	0 = Black stretch disable. 1 = Black stretch enable.
	Black Stretch Reference Level	1	0 1	X X	X X	X X	X X	X X	X X	X X	0 = 0 IRE (no set-up). 1 = 7.5 IRE (NTSC set-up).
0C	Blue drive adjustment (white point B)	6	X X	X X	0 1	0 1	0 1	0 1	0 1	0 1	-6 dB gain (Min. drive). 0 dB gain (Max. drive).
	Cut-off loop control	1	X X	0 1	X X	X X	X X	X X	X X	X X	0 = Cut-off loop active. 1 = Cut-off loop frozen.
	LSB (9th bit) Red cut-off counter	1	0 1	X X	X X	X X	X X	X X	X X	X X	Red LSB = 0 Red LSB = 1
0D	Red cut-off adjustment (Black point R)	6	X X	X X	0 1	0 1	0 1	0 1	0 1	0 1	-150 mV. +150 mV.
	Manual Cut-off Selection	2	0 1	0 1	X X	X X	X X	X X	X X	X X	Automatic Cut-off application, data = 00hex in registers 1A,1B, 1C. Manual cut-off application DC at R,G,B output are adjusted thanks registers 1A, 1B, 1C.
			0 1	1 0	X X	X X	X X	X X	X X	X X	Not allowed. Not allowed.
0E	Green cut-off adjustment (Black point G)	6	X X	X X	0 1	0 1	0 1	0 1	0 1	0 1	-150 mV. +150 mV.
	Not to be used	1	X	0	X	X	X	X	X	X	
	LSB (9th bit) Green cut-off counter	1	0 1	X X	X X	X X	X X	X X	X X	X X	Green LSB = 0 Green LSB = 1
0F	Peaking Control	4	X X	X X	X X	X X	0 1	0 1	0 1	0 1	0 dB at center Freq. Min. peaking. + 6dB at center Freq.Max. peaking.
	Coring on sharpness	1	X X	X X	X X	0 1	X X	X X	X X	X X	0 = Coring off. 1 = Coring on.
	Chroma Trap and Luma Delay Selection	1	X X	X X	0 1	X X	X X	X X	X X	X X	0 = Trap and Luma Delay Enabled. 1 = Trap and Luma Delay Disabled.
	CVBS2 ON/OFF	1	X X	0 1	X X	X X	X X	X X	X X	X X	0 = CVBS2 output Enabled. 1 = CVBS2 output Disabled.
	White Insertion	1	0 1	X X	X X	X X	X X	X X	X X	X X	0 = White insertion not active. 1 = White insertion enable during HOUT soft mode.

www.DataSheet4U.com

Reg. Addr (Hex)	Description	Bits	Data								Comments
			d7	d6	d5	d4	d3	d2	d1	d0	
10	APR Enable	1	X X	X X	X X	X X	X X	X X	X X	0 1	0 = APR disable. 1 = APR enable. Note: WR10 d0 to be set to 1 when RGB peak limitation is used
	APR Threshold	4	X X	X X	X X	0 1	0 1	0 1	0 1	X X	50 IRE. 100 IRE.
	RGB OSD Contrast Selection	1	X X	X X	0 1	X X	X X	X X	X X	X X	0 = Contrast control disable. 1 = Contrast control enable.
	CRT/LCD Display	1	X X	0 1	X X	X X	X X	X X	X X	X X	0 = RGB output blanking active, CRT Display 1 = RGB output blanking replaced by black level, LCD Display
	White Insertion	1	0 1	X X	X X	X X	X X	X X	X X	X X	White Insertion controlled by WR0Fd7 White forced at RGB Output

6.3.7 Chroma Controls

www.DataSheet4U.com

Reg. Addr. (Hex)	Description	Bits	Data								Comments
			d7	d6	d5	d4	d3	d2	d1	d0	
11	Bell Filter Adjust	5	X X	X X	X X	0 1	0 1	0 1	0 1	0 1	0 kHz. +100 kHz.
	PAL/NTSC Demodulation Gain	1	X X	X X	0 1	X X	X X	X X	X X	X X	0 = 0 dB gain (nominal). 1 = +6 dB gain.
	NTSC Matrix	1	X X	0 1	X X	X X	X X	X X	X X	X X	0 = 90° matrix selection. 1 = 104° matrix selection (in NTSC only).
	ACC Overload Disable	1	0 1	X X	X X	X X	X X	X X	X X	X X	0 = ACC overload active. 1 = ACC overload disable.
12	Bandpass adjust	4	X X	X X	X X	X X	0 1	0 1	0 1	0 1	f = fosc. f = 1.1*fosc.
	Chroma reference output	1	X X	X X	X X	0 1	X X	X X	X X	X X	0 = Chroma reference output OFF. 1 = Chroma reference output ON.
	Chroma DL selection	1	X X	X X	0 1	X X	X X	X X	X X	X X	0 = ON. 1 = OFF.
	Not to be used	2	0	0	X	X	X	X	X	X	
13	Crystal Selection	2	X X X X	X X X X	X X X X	X X X X	X X X X	0 0 1 1	0 1 0 1	X X X X	XTAL1 (4.43/3.5XX MHz). XTAL2 (3.5XX MHz). XTAL3 (3.5XX MHz). Not allowed.
	Standard Selection	2	X X X X X X X	X X X X X X X	X X X X X X X	0 0 1 1 1 1 X	0 1 0 0 0 1 X	X X 0 0 1 X X	X X 0 1 0 X 1	X X 0 X X X X	PAL. NTSC. SECAM (only with XTAL1). Not allowed. Not allowed. AUTO mode. Not allowed
	Crystal Inhibition	2	X X X X	X X X X	0 0 1 1	X X X X	X X X X	X X X X	X X X X	0 1 0 1	Two-crystal, P/S/N application. Three-crystal, P/N application. One-crystal, P/S/N 4.43 MHz application. Two-crystal, P/N application.
	Not to be used	2	0	0	X	X	X	X	X	X	

www.DataSheet4U.com

Reg. Addr. (Hex)	Description	Bits	Data								Comments
			d7	d6	d5	d4	d3	d2	d1	d0	
14	Hue Control (in NTSC only)	6	X	X	0	0	0	0	0	0	-45°.
			X	X	1	1	1	1	1	1	+45°.
	Flesh Enable	1	X	0	X	X	X	X	X	X	0 = Flesh disable (OFF).
			X	1	X	X	X	X	X	X	1 = Flesh enable (ON).
	Wide Flesh Charac-Teristic Selection	1	0	X	X	X	X	X	X	X	0 = Normal characteristic.
			1	X	X	X	X	X	X	X	1 = Wide characteristic.
15	Main Video Switch	2	X	X	X	X	X	X	0	0	CVBS1 selected.
			X	X	X	X	X	X	0	1	CVBS2 selected.
			X	X	X	X	X	X	1	X	Y/CVBS3 selected.
	Second Video Switch Control	2	X	X	X	X	0	0	X	X	CVBS1 selected.
			X	X	X	X	0	1	X	X	CVBS2 selected.
			X	X	X	X	1	0	X	X	Y/CVBS3 selected.
			X	X	X	X	1	1	X	X	Y+C selected.
	SVHS Switch Chroma Decoder Input Selec-tion	1	X	X	X	0	X	X	X	X	0 = Main CVBS selected.
			X	X	X	1	X	X	X	X	1 = CHR input selected (SVHS).
	Not to be used	2	X	0	0	X	X	X	X	X	
	Safety Reset	1	0	X	X	X	X	X	X	X	0 = Safety active
			1	X	X	X	X	X	X	X	1 = Reset Safety, Safety non-active

www.DataSheet4U.com

6.3.8 Scanning Controls

Reg. Addr. (Hex)	Description	Bits	Data								Comments
			d7	d6	d5	d4	d3	d2	d1	d0	
16	Horizontal Shift	6	X	X	0	0	0	0	0	0	-2.5 µs.
			X	X	1	1	1	1	1	1	+2.5 µs.
	Horizontal Output Pulse Disable	1	X	0	X	X	X	X	X	X	0 = Normal mode.
			X	1	X	X	X	X	X	X	1 = HOUT disable (high level).
	Interlace	1	0	X	X	X	X	X	X	X	0 = Interlace mode.
			1	X	X	X	X	X	X	X	1 = De-interlace mode.
17	Vertical Amplitude	6	X	X	0	0	0	0	0	0	1.5 V on V_{AMP} Pin.
			X	X	1	1	1	1	1	1	6.0 V on V_{AMP} Pin.
	50/60Hz Selection	2	0	0	X	X	X	X	X	X	Auto (50 Hz when no ident.).
			0	1	X	X	X	X	X	X	60 Hz.
			1	0	X	X	X	X	X	X	50 Hz.
			1	1	X	X	X	X	X	X	Auto (60 Hz when no ident.).
18	Vertical Position	4	X	X	X	X	0	0	0	0	4 V high level on VERT Pin.
			X	X	X	X	1	1	1	1	6 V high level on VERT Pin.
	PLL1 Time Constant	2	X	X	0	0	X	X	X	X	Auto time constant selection.
			X	X	0	1	X	X	X	X	Short time constant.
			X	X	1	0	X	X	X	X	Long time constant.
			X	X	1	1	X	X	X	X	Very long time constant.
	Horizontal Synchronization	1	X	0	X	X	X	X	X	X	0 = PLL1 active.
			X	1	X	X	X	X	X	X	1 = PLL1 not active (horiz. free running mode).
	Vertical Synchronization	1	0	X	X	X	X	X	X	X	0 = Vertical synchronization active.
			1	X	X	X	X	X	X	X	1 = Vertical free running mode.

www.DataSheet4U.com

Reg. Addr. (Hex)	Description	Bits	Data								Comments
			d7	d6	d5	d4	d3	d2	d1	d0	
19	Vertical Output Low Level Control	1	X X	X X	X X	X X	X X	X X	X X	0 1	0 = 0.1 V low level on VERT Pin. 1 = 2 V low level on VERT Pin.
	Frame Blanking	1	X X	X X	X X	X X	X X	X X	0 1	X X	0 = Adapted to standard. 1 = Long blanking (50 Hz blanking) both in 50 Hz and 60 Hz modes
	Noise Detector Threshold	2	X X	X X	X X	X X	0 1	0 1	X X	X X	Low threshold. High threshold.
	Not to be used	1	X	X	0	0	X	X	X	X	
	Wide Line Blanking	1	X X	X X	0 1	X X	X X	X X	X X	X X	0 = Standard Line Blanking 1 = Wide Line Blanking
	Copy Protection Mode	1	X X	0 1	X X	X X	X X	X X	X X	X X	0 = Normal PLL1 operating mode. 1 = Copy Protection Mode.
	AV Mode Time Constant	1	0 1	X X	X X	X X	X X	X X	X X	X X	0 = PLL1 short time constant during all frames. 1 = PLL1 long time constant during vertical blanking, short time constant for the rest of the field.

6.3.9 Miscellaneous

www.DataSheet4U.com

Reg. Addr. (Hex)	Description	Bits	Data								Comments
			d7	d6	d5	d4	d3	d2	d1	d0	
1A	Manual Cut-off Register Red	8	0 1	0 1	0 1	0 1	0 1	0 1	0 1	0 1	Low DC at RGB output. High DC at RGB output.
1B	Manual Cut-off Register Green	8	0 1	0 1	0 1	0 1	0 1	0 1	0 1	0 1	Low DC at RGB output. High DC at RGB output.
1C	Manual Cut-off Register Blue	8	0 1	0 1	0 1	0 1	0 1	0 1	0 1	0 1	Low DC at RGB output. High DC at RGB output.
1D	CVBS1 Out selection at pin 29 SDIP56	8	0 0	0 0	0 0	0 0	0 0	1 0	1 0	1 0	CVBSOUT1 selected at pin 29 SDIP56. Default value, set to 0h when CVBSOUT1 not used.
1E	Not To Be Used	7	0	0	0	X	0	0	0	0	
	SIF AGC time constant (positive modulation)	1	0 0	0 0	0 0	0 1	0 0	0 0	0 0	0 0	Automatic SIFAGC Time constant control. Forced Long time constant.

www.DataSheet4U.com

Reg. Addr. (Hex)	Description	Bits	Data								Comments
			d7	d6	d5	d4	d3	d2	d1	d0	
1F	VERT Output Inhibition	1	X X	X X	X X	X X	X X	0 0	X X	0 1	VERT normal operating. VERT inhibition (forced to high DC level controlled by vertical position register).
	Sound Level Status Refresh	1	X X	X X	X X	X X	X X	0 0	0 1	X X	0 = Sound level status continuously refreshed 1 = Sound level status refreshed only at the end of vertical synchronization pulse
	Not to be used	1	X	X	X	X	X	0	X	X	
	Luma Delay Shift	1	X X	X X	X X	X X	0 1	0 0	X X	X X	Standard luma delay. 140 ns on luma delay.
	AVL Control & Status	2	X X X X	X X X X	0 0 1 1	0 1 0 1	X X X X	X X X X	X X X X	X X X X	AVL OFF, read reg 03h, d7 = AGC Tuner Status AVL OFF, read reg 03h, d7 = AGC Tuner Status AVL ON, read reg 03h, d7 = AVL Gain Status AVL ON, read reg 03h, d7 = AGC Tuner Status reg 04h, d3d2 = 11: AVL Gain Status = 1 (Min.) reg 04h, d3d2 ≠ 11: AVL Gain Status = 0 (Max.)
	AM/FMOUT pin selection	2	0 0 1 1	0 1 0 1	X X X X	X X X X	X X X X	0 0 0 0	X X X X	X X X X	Output of AM/FM demodulator. Sound subcarriers selected. Audio output muted. Main audio switch output, either internal or external audio depending on main audio switch selection. reg 04h; d0 = 0: internal audio. reg 04h; d0 = 1: external audio.

www.DataSheet4U.com

6.4 OUTPUT SIGNALS (READ MODE)

Reg. Addr. (Hex)	Description	Bits	Data								Comments
			d7	d6	d5	d4	d3	d2	d1	d0	
00	Power-on Reset	1	X X	X X	X X	X X	X X	X X	X X	0 1	Normal mode. Power down mode.
	Field Frequency	1	X X	X X	X X	X X	X X	X X	0 1	X X	50 Hz. 60 Hz.
	Field Lock Status	1	X X	X X	X X	X X	X X	0 1	X X	X X	Not locked. Locked.
	Video Identification	1	X X	X X	X X	X X	0 1	X X	X X	X X	No identification. Video identification.
	Standard Status Crystal Selection	2	X X X X	X X X X	0 0 1 1	0 1 0 1	X X X X	X X X X	X X X X	X X X X	XTAL1 (4.43 MHz). XTAL2 (3.5X MHz). XTAL3 (3.5X MHz). XTAL1 (3.5X MHz).
	Standard Selection	2	0 0 1 1	0 1 0 1	X X X X	X X X X	X X X X	X X X X	X X X X	X X X X	PAL. NTSC. SECAM. COLOR OFF.

www.DataSheet4U.com

Reg. Addr. (Hex)	Description	Bits	Data d7	d6	d5	d4	d3	d2	d1	d0	Comments
01	SVHS status	1	X	X	X	X	X	X	X	0	No SVHS (CVBS mode).
			X	X	X	X	X	X	X	1	SVHS mode.
	Noise detection	1	X	X	X	X	X	X	0	X	High S/N.
			X	X	X	X	X	X	1	X	Low S/N.
	Scanning Horizontal phase-locked loop status	1	X	X	X	X	X	0	X	X	Not locked.
			X	X	X	X	X	1	X	X	Locked.
	Safety status	1	X	X	X	X	0	X	X	X	Safety not active.
			X	X	X	X	1	X	X	X	Safety active.
	Fast Blanking detection on external fast blanking pin	1	X	X	X	0	X	X	X	X	No insertion detected.
			X	X	X	1	X	X	X	X	Insertion on FBext.
	Test	1	X	X	0	X	X	X	X	X	Not to be used
			X	X	1	X	X	X	X	X	
	Scanning VCO Calibration	1	X	0	X	X	X	X	X	X	Not calibrated.
			X	1	X	X	X	X	X	X	Calibrated.
	FM demodulation VCO calibration	1	0	X	X	X	X	X	X	X	Not calibrated.
			1	X	X	X	X	X	X	X	Calibrated.
02	Digital AFC status	3	X	X	X	X	X	0	1	1	F_{PLL} - F0 < -300 kHz.
			X	X	X	X	X	0	1	0	-300 kHz < F_{PLL} - F0 < -60 kHz.
			X	X	X	X	X	0	0	0	-60 kHz < F_{PLL} - F0 < +60 kHz.
			X	X	X	X	X	1	0	0	+60 kHz < F_{PLL}- F0 < +300 kHz.
			X	X	X	X	X	1	0	1	+300 kHz < F_{PLL} - F0.
	Sound carrier level	3	X	X	0	0	0	X	X	X	Level 1 (low sound carrier signal).
			X	X	0	0	1	X	X	X	Level 2.
			X	X	0	1	1	X	X	X	Level 3.
			X	X	0	1	0	X	X	X	Level 4.
			X	X	1	1	0	X	X	X	Level 5.
			X	X	1	1	1	X	X	X	Level 6.
			X	X	1	0	1	X	X	X	Level 7.
			X	X	1	0	0	X	X	X	Level 8 (high sound carrier signal)
	Blue cut-off register and cut-off loop status	2	0	0	X	X	X	X	X	X	Blue CO register < 011110000
			0	1	X	X	X	X	X	X	Blue CO register > 100001111
			1	0	X	X	X	X	X	X	011110000 < Blue CO register < 100001111 and Icath not locked
			1	1	X	X	X	X	X	X	011110000 < Blue CO register < 100001111 and Icath locked
03	IC identification	1	X	X	X	X	X	X	X	0	TQFP64
			X	X	X	X	X	X	X	1	SDIP56
	Tuner AGC Output Status (reg 1Fh, d5d4 = 00 or 01 or 11)	1	0	X	X	X	X	X	X	X	Tuner AGC Output not active
			1	X	X	X	X	X	X	X	Tuner AGC Output active
	AVL Gain Status (reg 1Fh, d5d4 = 10)	1	0	X	X	X	X	X	X	X	AVL Gain Max. (Low audio signal)
			1	X	X	X	X	X	X	X	AVL Gain Min. (High audio signal)

www.DataSheet4U.com

www.DataSheet4U.com

6.5 POWER-ON RESET - INITIAL BUS REGISTER CONDITIONS

Power-On Reset is active when the power supply V_{CCD} is below 3 Volts.

All data from all registers must be written by microprocessor after power-on. Unused data must be set to 0. POR values are not tested during production.

Reg. Addr. (Hex)	Initial Data Value								Comments
	d7	d6	d5	d4	d3	d2	d1	d0	
00	1	0	0	0	0	0	0	0	PIFVCO free running fine adjustment Typical.
01	0	0	0	0	0	1	1	1	PIFVCO coarse typ, BG = 38.9 MHz, Negative modulation, AFC active, no PIF over-modulation regulation.
02	0	0	0	1	0	0	0	0	CVBS amplitude Typical, $2V_{PP.}$
03	0	0	1	0	0	0	0	0	Tuner AGC starting point Typical, Tuner AGC gain Min.
04	0	0	0	0	0	0	0	0	FM/AM out selected, FM de-emphasis and FM deviation auto-control, FM demod. active, FM out selected, QSS and AM demod. active.
05	0	1	1	1	1	1	1	1	Volume control attenuation at maximum, linear curve (dB).
06	0	0	0	0	0	0	0	0	PIF < 42 MHz, 6.5 MHz sound carrier selected, auto AGC SIF time constant, saw filter switch control at low level, CVBS out enabled, QSS mode.
07	0	0	1	0	0	0	0	0	Contrast at middle, blue screen disabled.
08	0	0	1	0	0	0	0	0	Saturation at middle, half contrast disabled, oversize blanking disabled.
09	0	0	1	0	0	0	0	0	Brightness at middle, RGB Blanking not active.
0A	0	0	1	0	0	0	0	0	Red drive at middle, RGBext insertion enabled (FBext Pin control).
0B	0	0	1	0	0	0	0	0	Green drive at middle, black stretch disabled, black stretch ref 0IRE.
0C	0	0	1	0	0	0	0	0	Blue drive at middle, cut-off loop active.
0D	0	0	1	0	0	0	0	0	Red cut-off at middle, automatic cut-off loop.
0E	0	0	1	0	0	0	0	0	Green cut-off at middle.
0F	0	0	0	0	1	0	0	0	Peaking on luma at middle, coring off, trap ON (CVBS & color identified), CVBS2 ON, white insertion not active.
10	0	0	0	1	0	0	0	0	APR disabled, APR threshold at middle, RGB OSD contrast disabled.
11	0	0	0	0	0	0	0	0	No shift of bell filter center frequency, 0dB P/N demod. gain, 90° matrix selection, ACC overload ON.
12	0	0	0	0	0	0	0	0	No shift of bandpass center frequency, chroma reference output off, chroma delay line on.
13	0	0	0	0	0	0	0	0	Two crystals application P/S/N, PAL XTAL1 forced mode, two crystal applications.
14	0	0	1	0	0	0	0	0	Hue at middle, flesh disabled, normal flesh characteristic.
15	0	0	0	0	0	0	0	0	CVBS1 selected on main CVBS output, CVBS1 selected on second CVBS output, CVBS mode.
16	0	0	1	0	0	0	0	0	Horizontal shift at middle, horizontal output enabled, interlace mode.
17	0	0	1	0	0	0	0	0	Vertical amplitude at middle, auto 50/60 Hz identification.
18	0	0	0	0	1	0	0	0	Vertical position at middle, automatic time constant selection on PLL1, PLL1 active, Vertical synchronization active.
19	0	0	0	0	0	0	0	0	0.1 V low level at pin VERT, frame blanking adapted to standard, noise detector low threshold.
1A	0	0	0	0	0	0	0	0	Not active, auto cut-off.
1B	0	0	0	0	0	0	0	0	Not active, auto cut-off.
1C	0	0	0	0	0	0	0	0	Not active, auto cut-off.
1D	0	0	0	0	0	0	0	0	R-Y output at pin 29 (SDIP56)
1E	0	0	0	0	0	0	0	0	Not to be used, except d4: Auto. SIF AGC time constant control in L/L' standards.
1F	0	0	0	0	0	0	0	0	VERT pulse active, standard luma delay, AVL off, AM/FM mono sound selected.

www.DataSheet4U.com

7 I²C BUS SPECIFICATION COMPATIBILITY

The STV2246H/36H, 2286H, 2247H/37H, 2248H/38H and 2249H/39H I²C bus specification is compatible between IC version. However, some dedicated settings must be used for the different versions. The following sections show the differences between the various versions. An “X” means that the function is available and can be set to “1” or “0”.

	2248H/38H	2249H/39H	2247H/37H	2246H/36H	2286H
RGBext WR0A d7:6	X	X	X	X	01[1]
L/L' mode WR01 d5	X	0	0	0	0
Positive/Negative Modulation WR01 d4	X	0	0	0	0
FM/AM Output Selection WR04 d5	X	0	0	0	0
Bell Filter WR11 d4:0	X	X	00000	00000	00000
QSS/Intercarrier Application WR06 d6	X	X	X	1	1
QSS and AM defeat WR04 d6	X	X	X	1	1
AGC SIF Time Constant WR06 d3 & WR1E d4	X	X	X	X	00
CVBSout amplitude WR02 d4:0	X	X	X	X	10000

Note 1: The FBEXT pin must be connected to ground.

www.DataSheet4U.com

CAUTION: The specification of WR04 d3:2 has changed.

For 224XC versions (refer to STV224XC datasheet), WR04 d3:2 = 11 (bin.) means that FM demod de-emphasis is bypassed. This function is used for BTSC application compatibility.

For 224XD/XE versions, WR04 d3:2 = 11: NOT TO BE USED.

For 224XH versions, WR04 d3:2 = 11 (bin.) means that Audio FM Wide mode is selected and it must be used in QSS applications only. In this case, the following registers must be programmed:

WR04 d3:2 = 11 (bin.) (Audio FM Wide mode)

WR06 d6 = 0 (QSS application)

WR1F d5:4 = 1x (bin.) (AVL ON)

CAUTION: The specification of WR07 d6 has changed.

For 224XC/224XD versions, WR07 d6 = 1 means “insertion of cut-off pulses after a vertical oversize blanking”

For 224XE/XH versions, WR07 d6 = 1 means “RGB peak limitation”

CAUTION: The specification of WR0F d5 has changed.

The new specification is:

WR0F d5 = 0: trap and luma delay active; this is not changed

WR0F d5 = 1: trap ***and luma delay*** disabled (bypass); this is changed

www.DataSheet4U.com

8 INPUT/OUTPUT SCHEMATIC DIAGRAMS

Figure 20. Ground and Supply Voltages

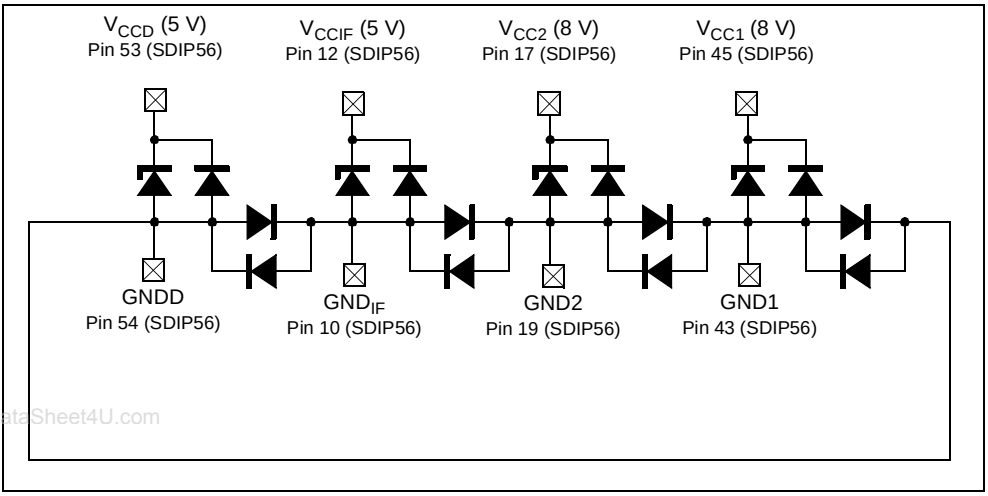

www.DataSheet4U.com

Figure 21. Main Audio Output

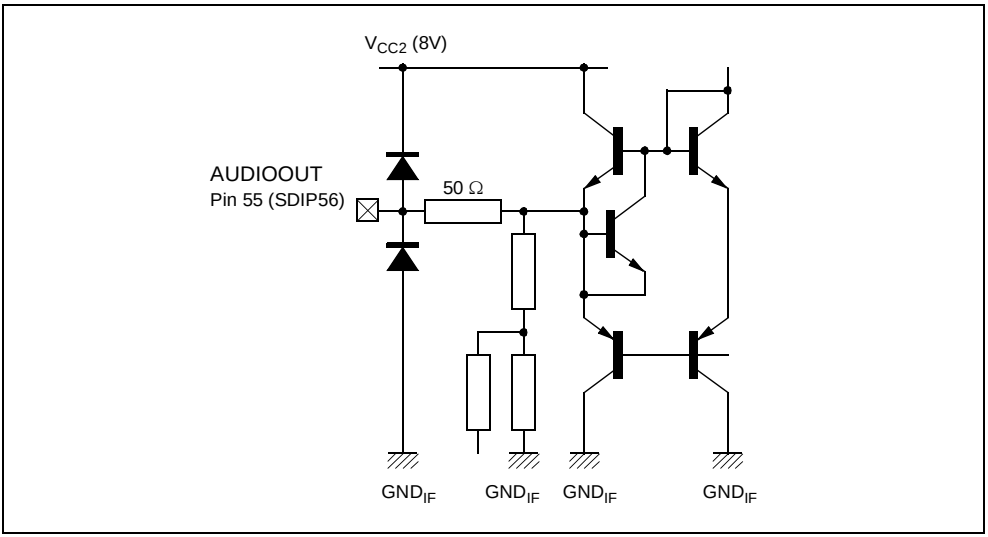

www.DataSheet4U.com

Figure 22. Scanning PLL Filter

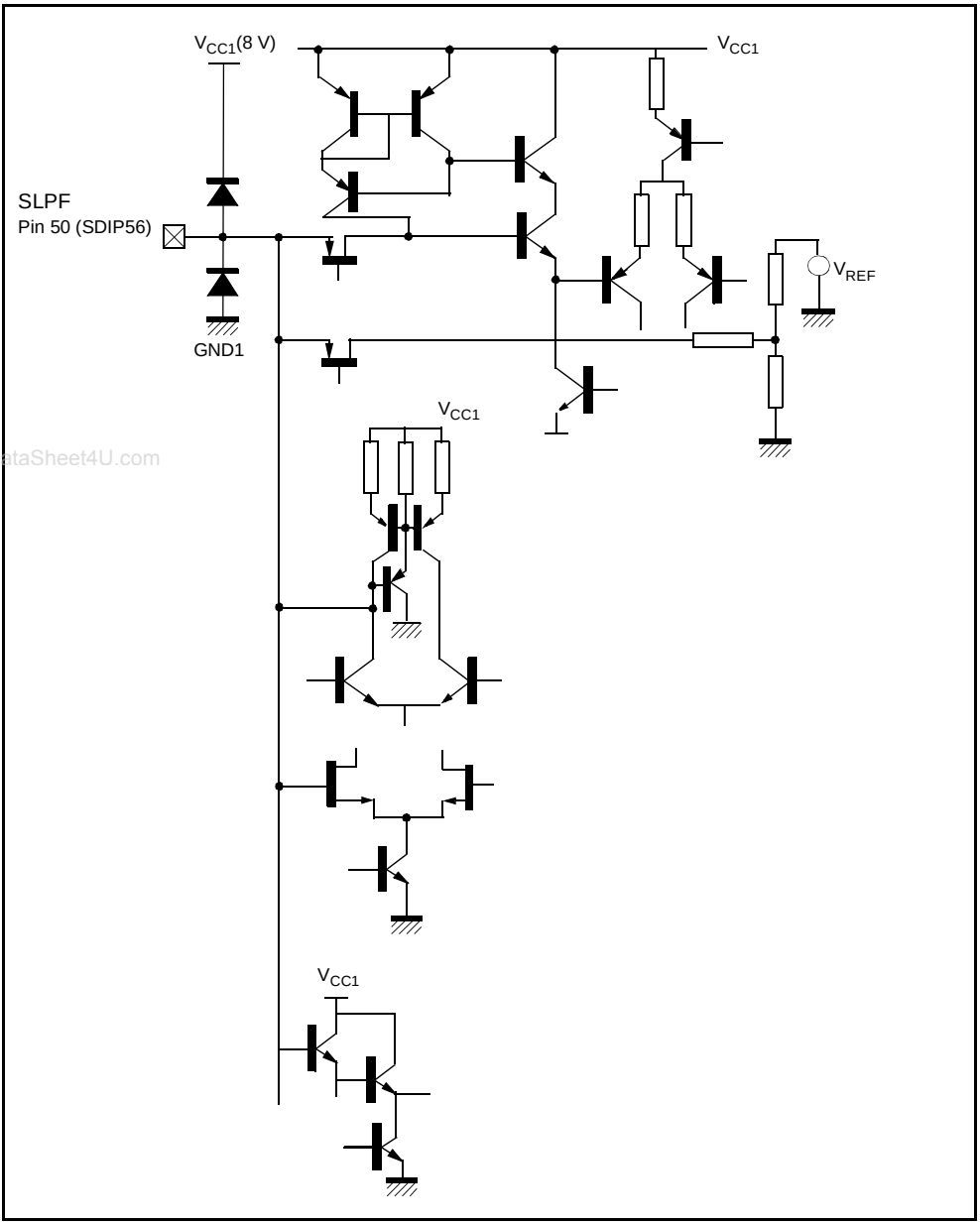

www.DataSheet4U.com

Figure 23. I²C Bus Data Input

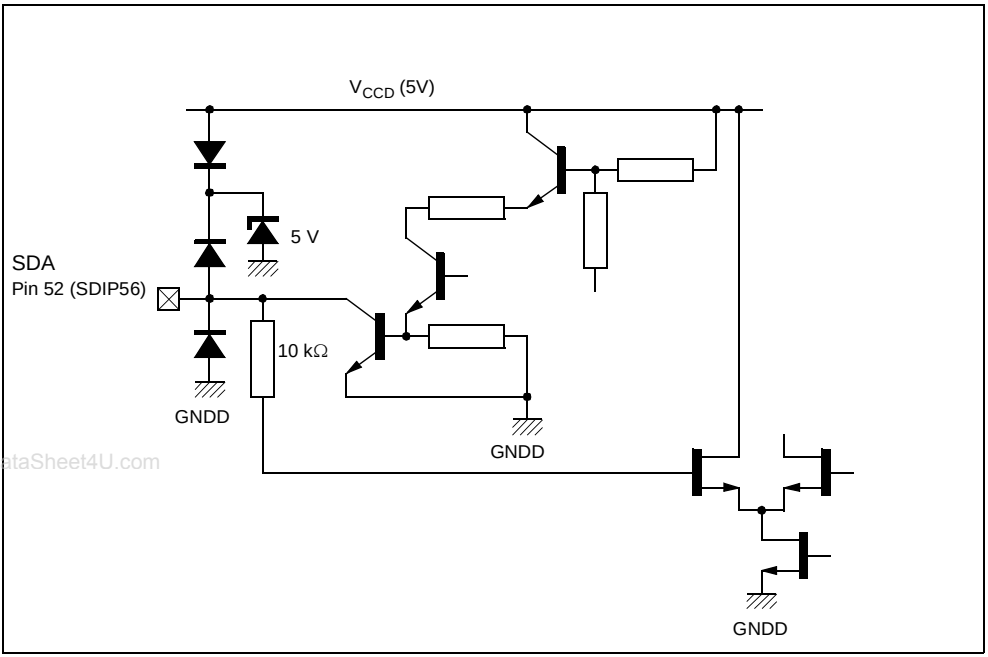

www.DataSheet4U.com

Figure 24. I²C Bus Clock Input

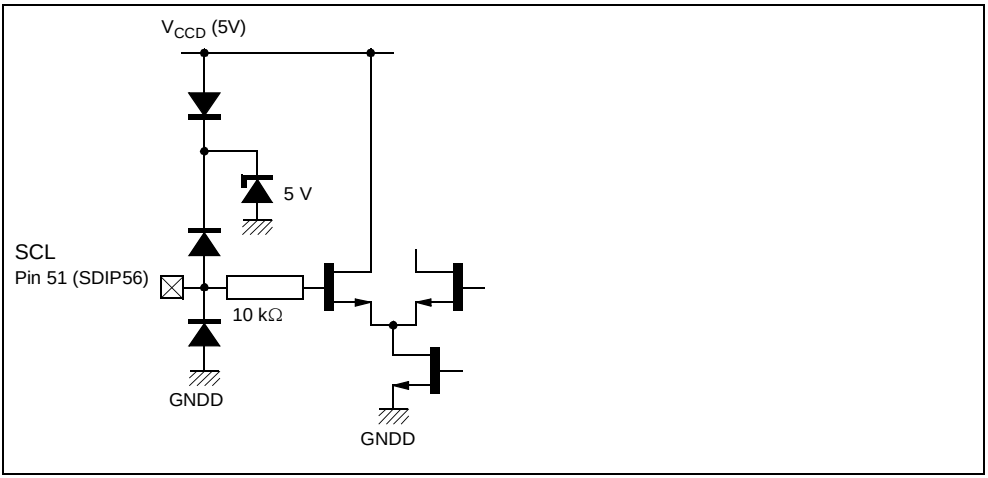

www.DataSheet4U.com

Figure 25. FM Demodulation Capacitor

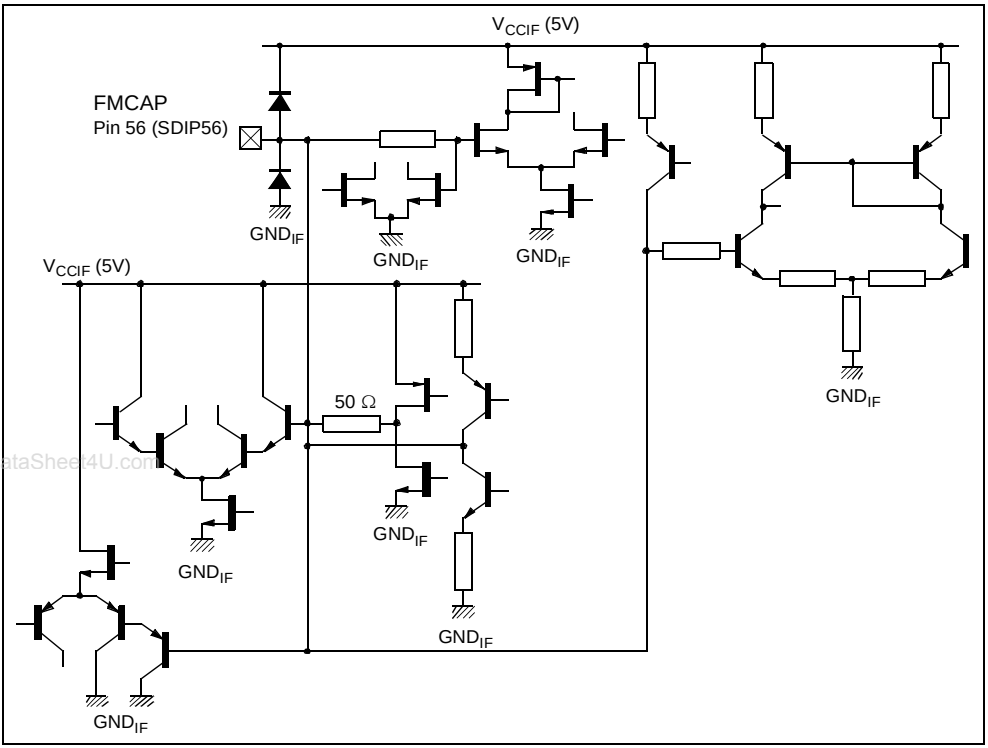

www.DataSheet4U.com

Figure 26. IF Inputs

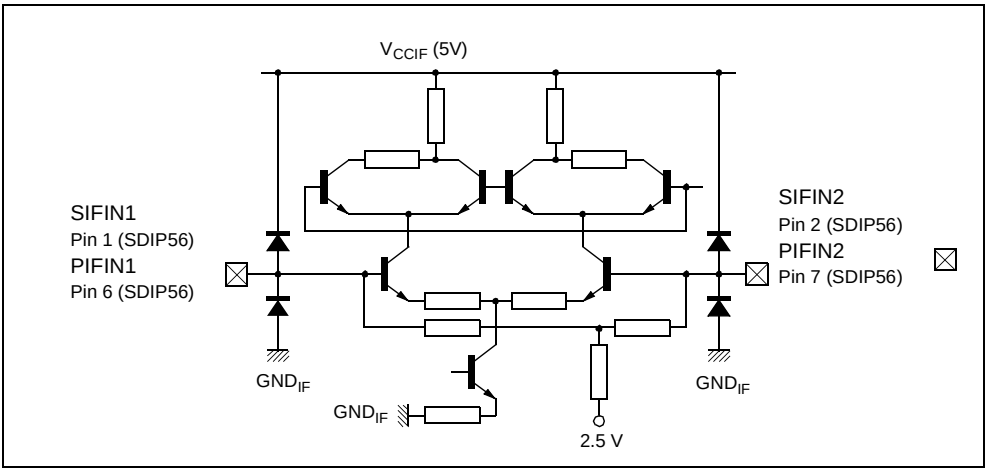

www.DataSheet4U.com

Figure 27. AGC SIF Capacitor

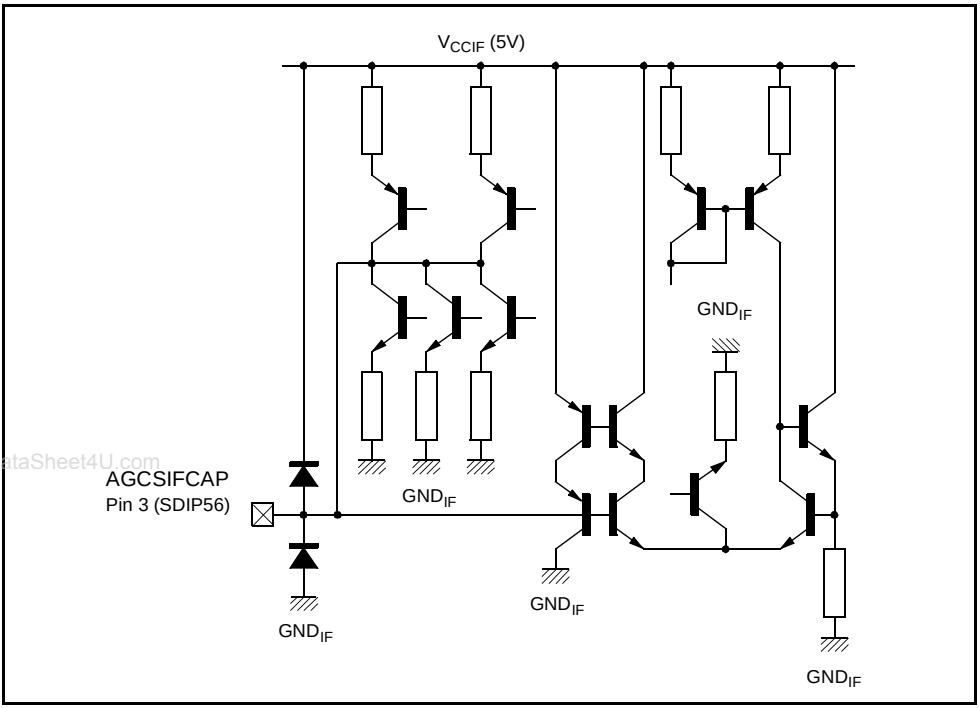

www.DataSheet4U.com

Figure 28. Voltage Reference Filtering

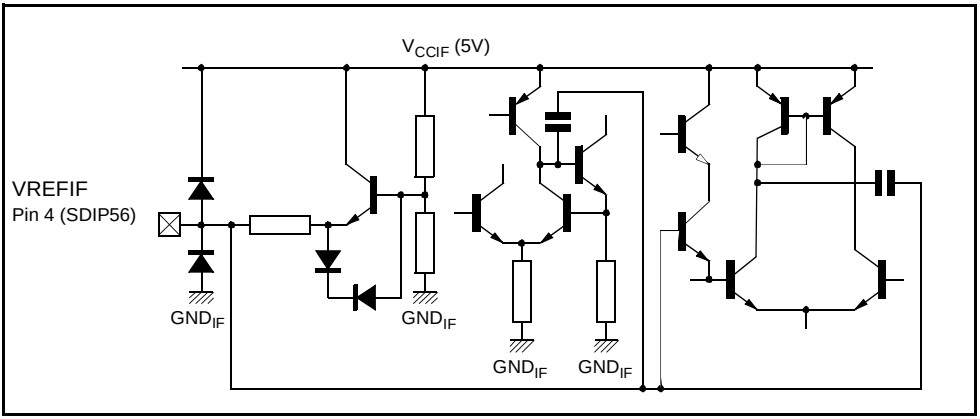

www.DataSheet4U.com

Figure 29. AGC PIF Capacitor

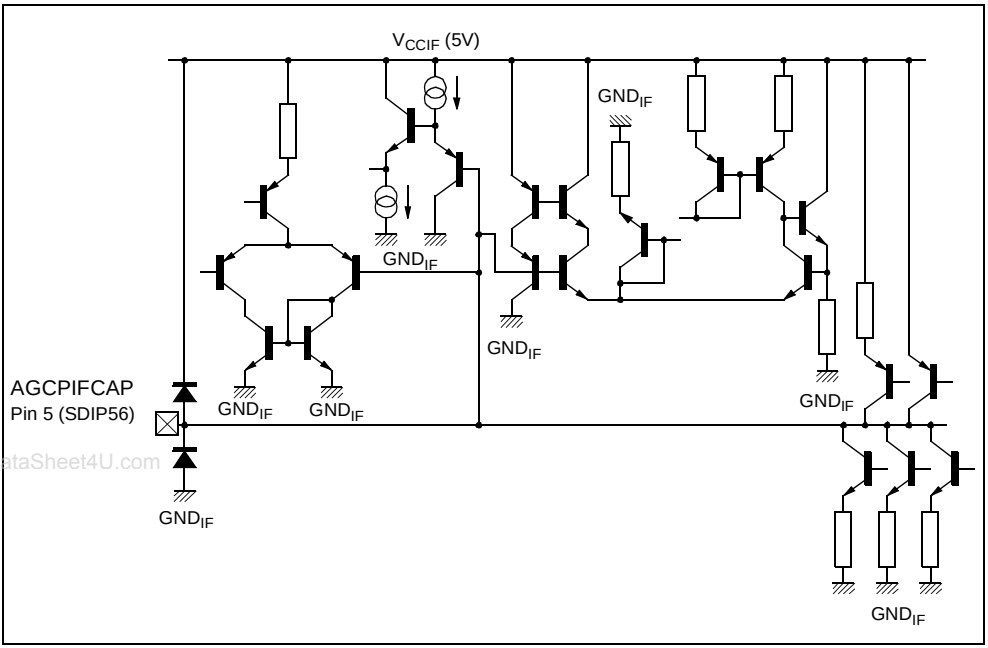

www.DataSheet4U.com

Figure 30. SAW Filter Switch Output (TQFP64)

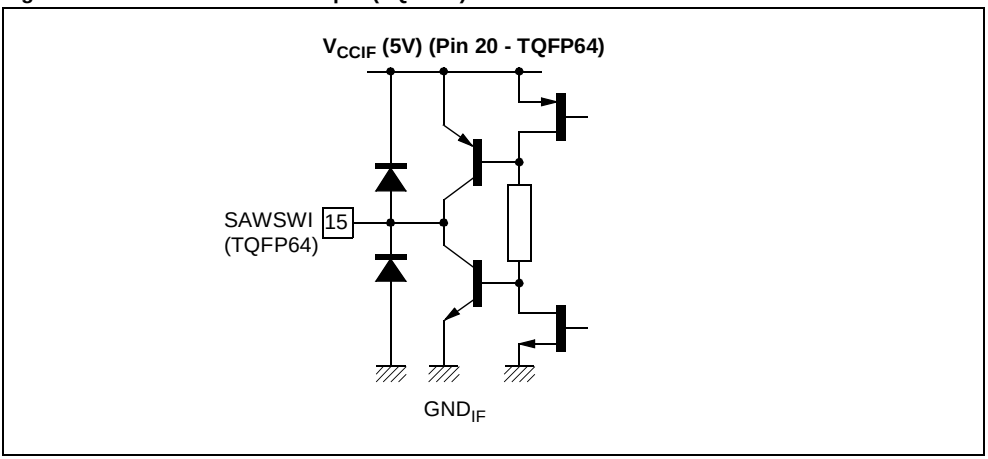

www.DataSheet4U.com

Figure 31. AGC Tuner Output

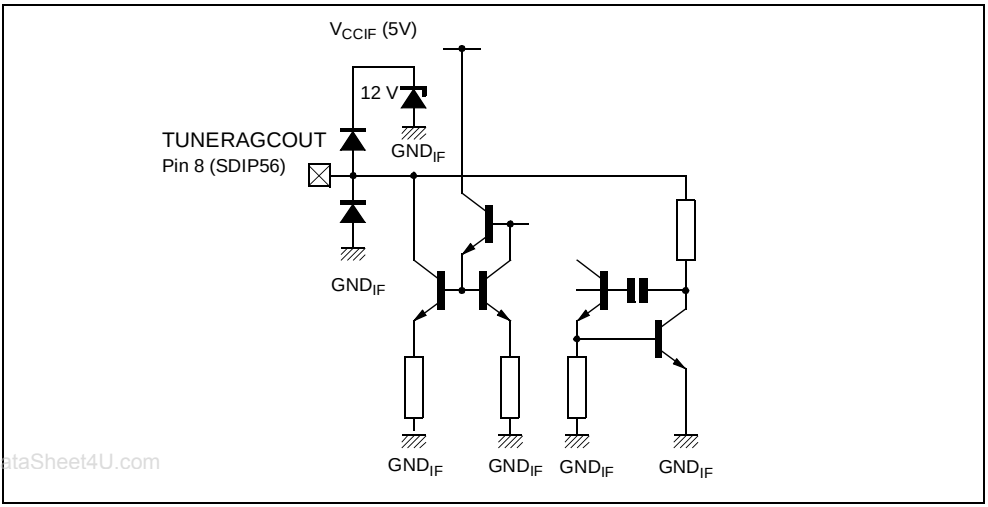

www.DataSheet4U.com

Figure 32. IF PLL Filter

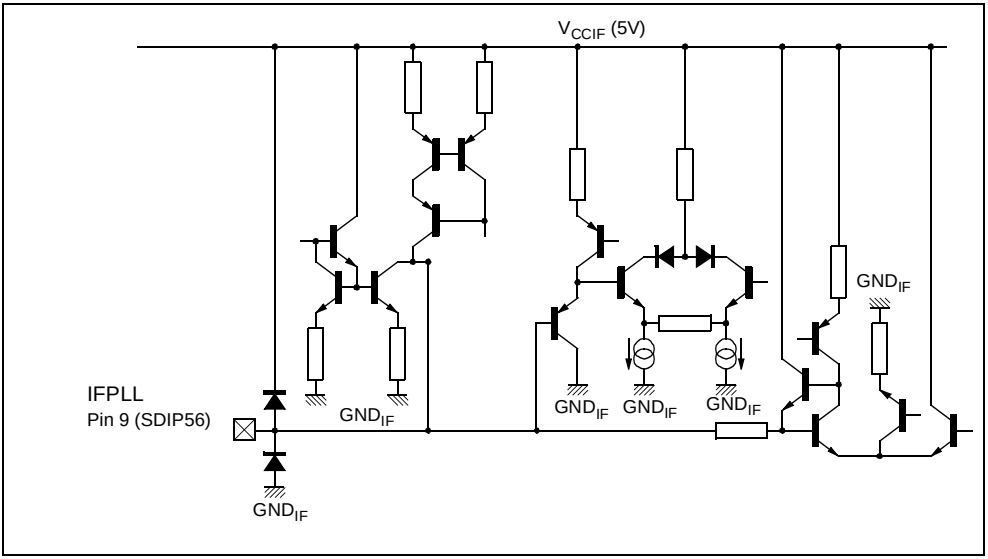

www.DataSheet4U.com

Figure 33. AM/FM Mono or Stereo Sound Carrier Output

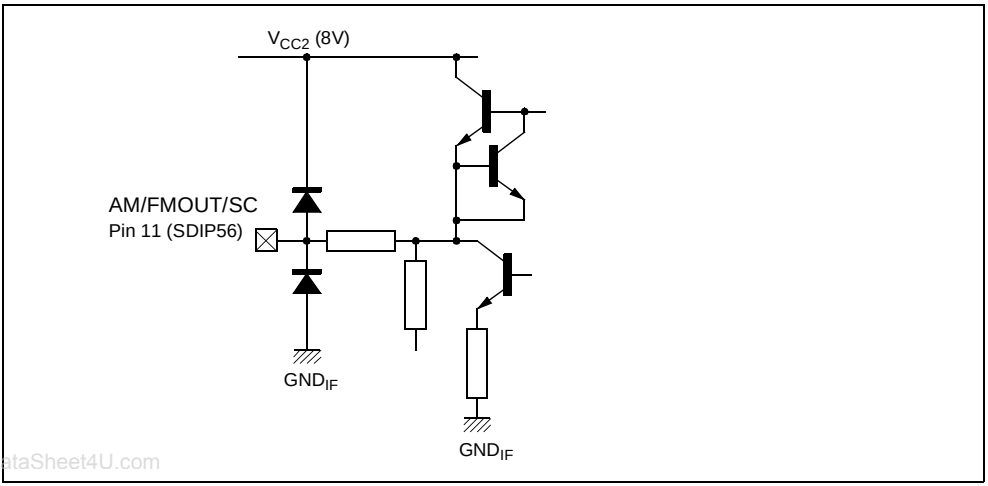

www.DataSheet4U.com

Figure 34. Internal CVBS Output

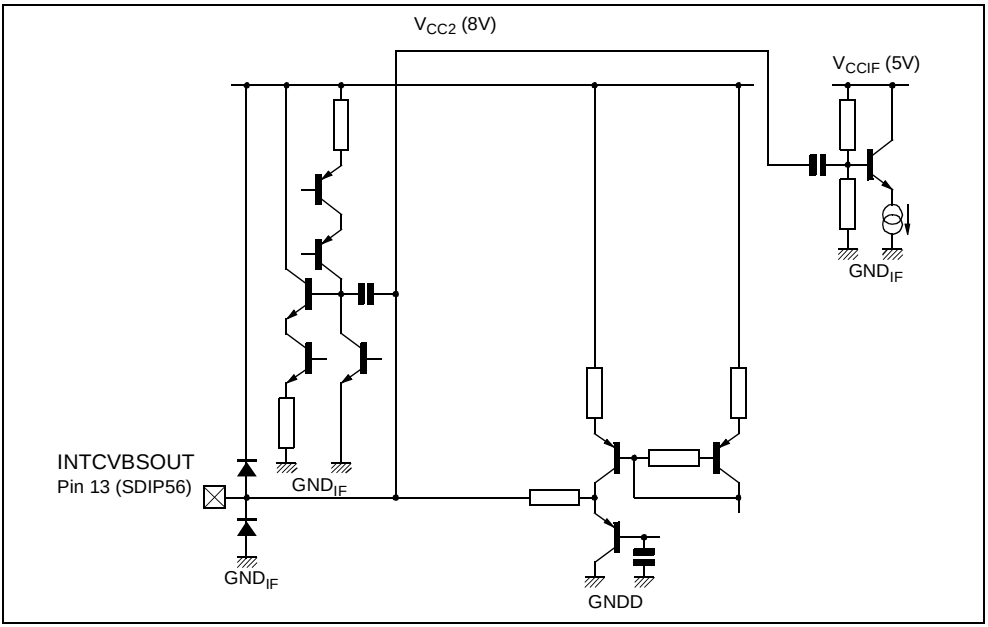

www.DataSheet4U.com

Figure 35. External Audio Input

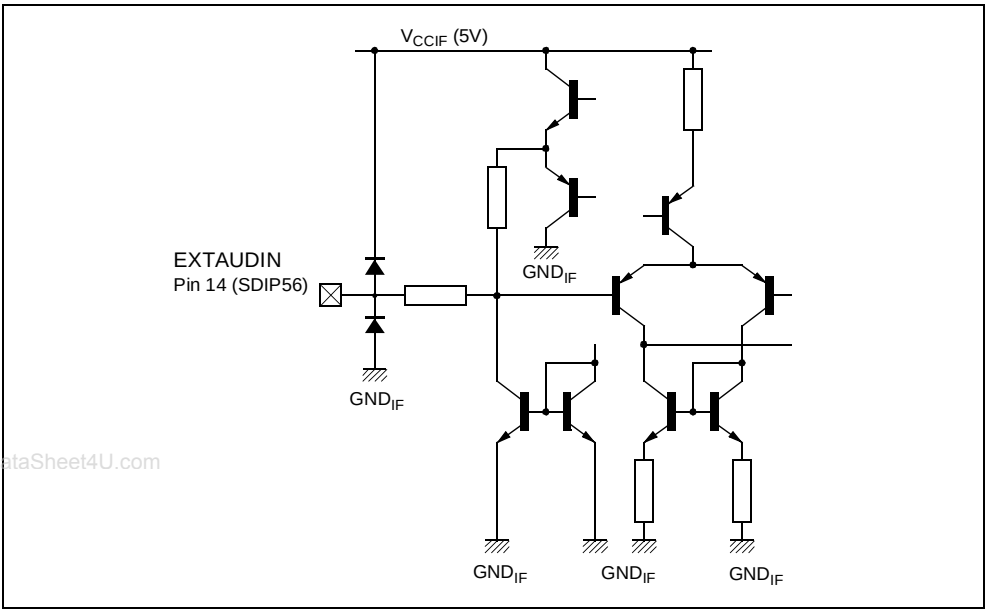

www.DataSheet4U.com

Figure 36. PIF LC Inputs

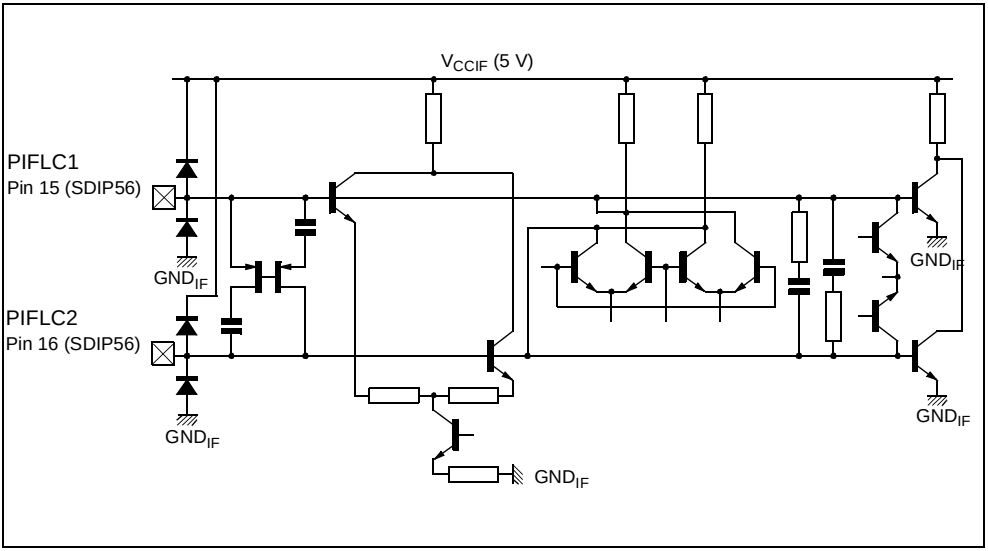

www.DataSheet4U.com

Figure 37. CVBS Video Inputs

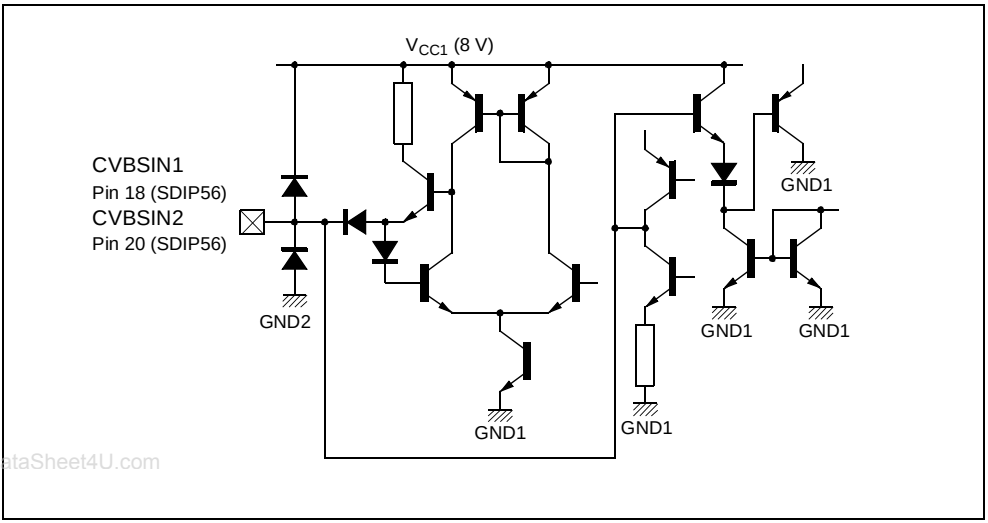

www.DataSheet4U.com

Figure 38. Black Stretch Capacitor

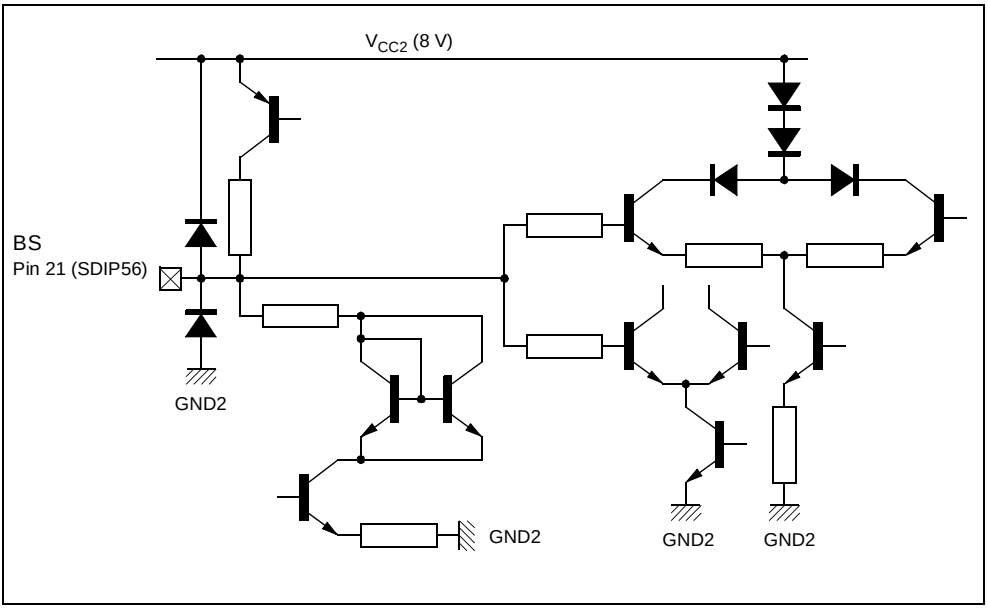

www.DataSheet4U.com

Figure 39. RGB & YCrCb External Video Inputs

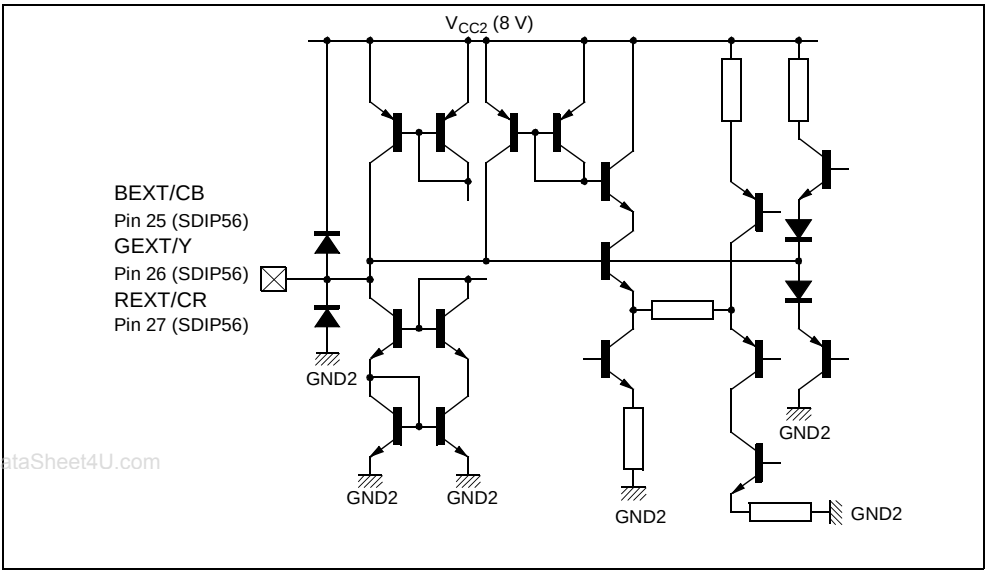

www.DataSheet4U.com

Figure 40. External Fast Blanking Input

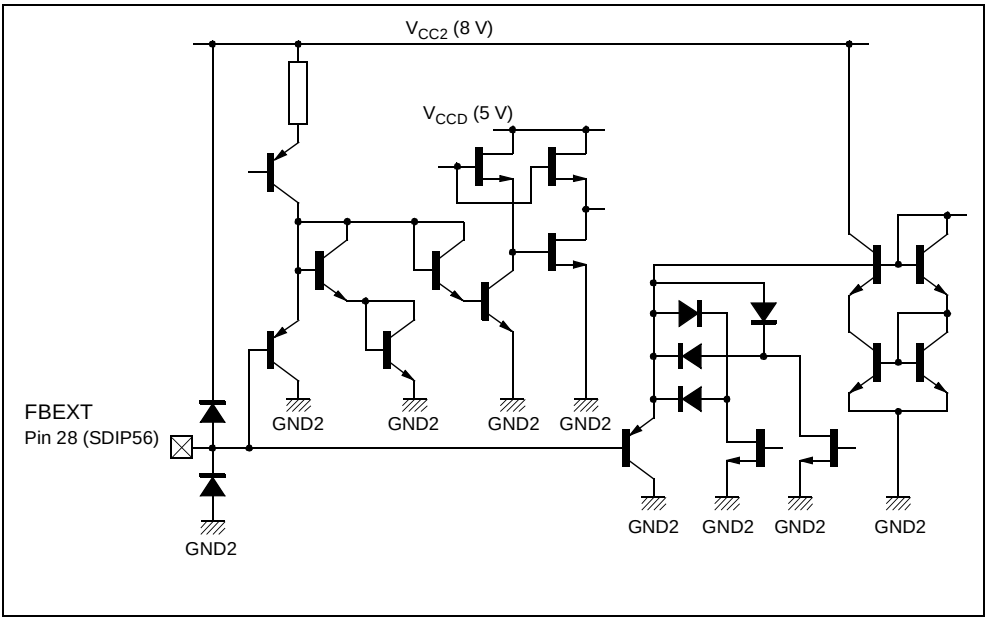

www.DataSheet4U.com

Figure 41. Y/CVBS External Input

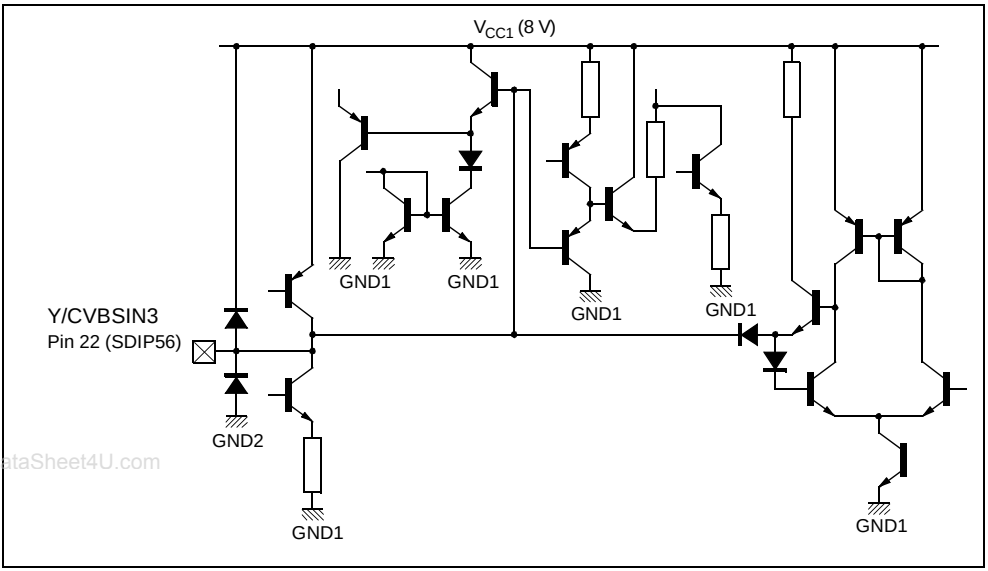

www.DataSheet4U.com

Figure 42. Chroma (SVHS) Input

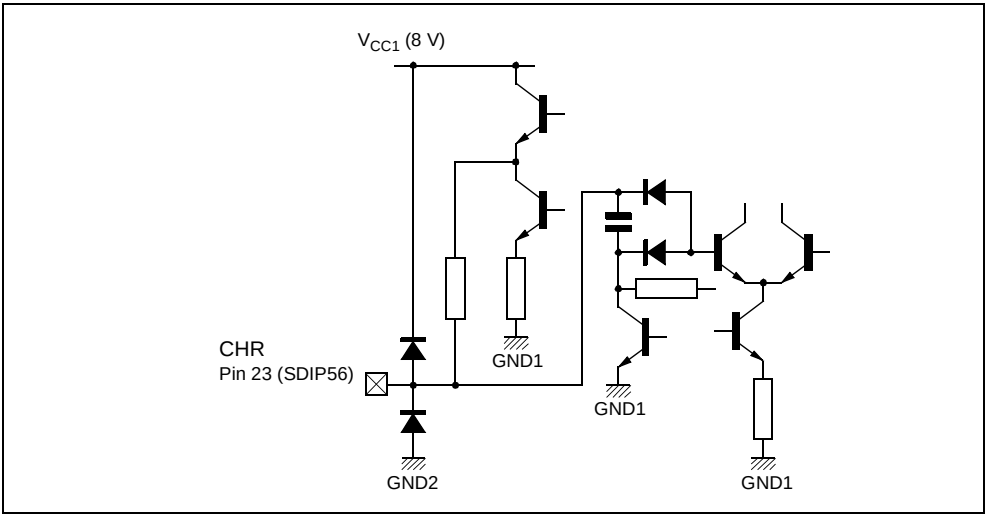

www.DataSheet4U.com

Figure 43. Automatic RGB Peak Regulation

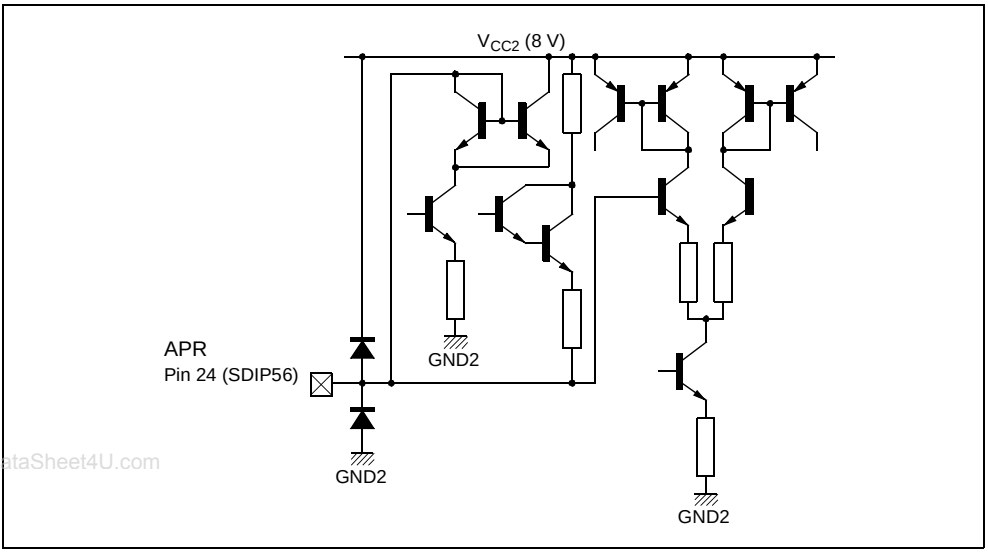

www.DataSheet4U.com

Figure 44. RGB Outputs

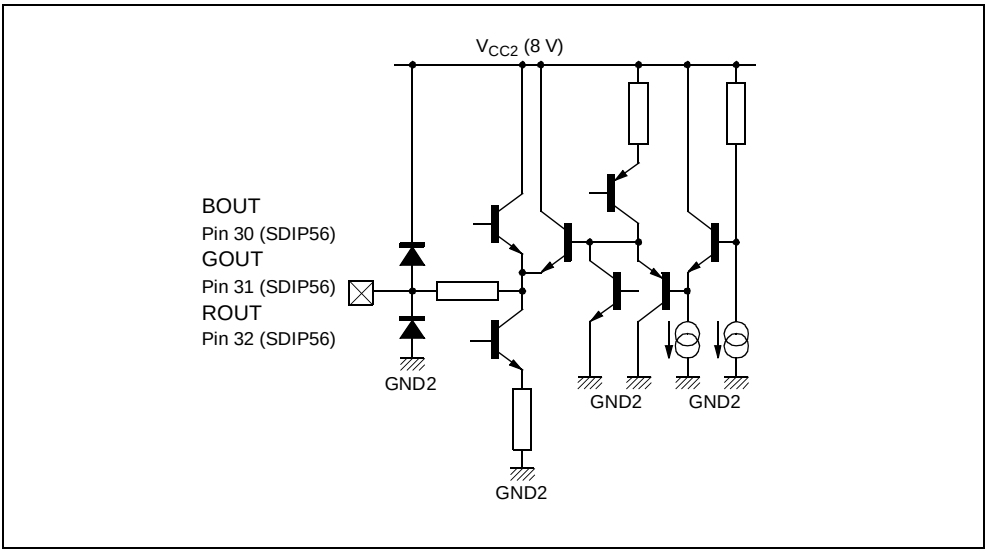

www.DataSheet4U.com

Figure 45. Cathode Current Measurement Input

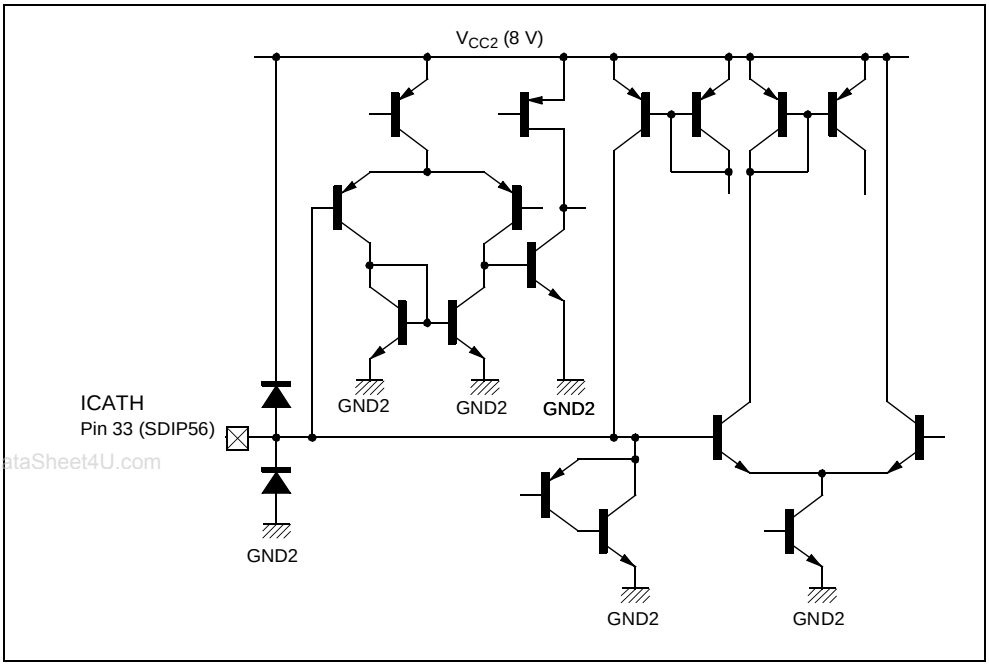

www.DataSheet4U.com

www.DataSheet4U.com

Figure 46. OSD RGB Inputs

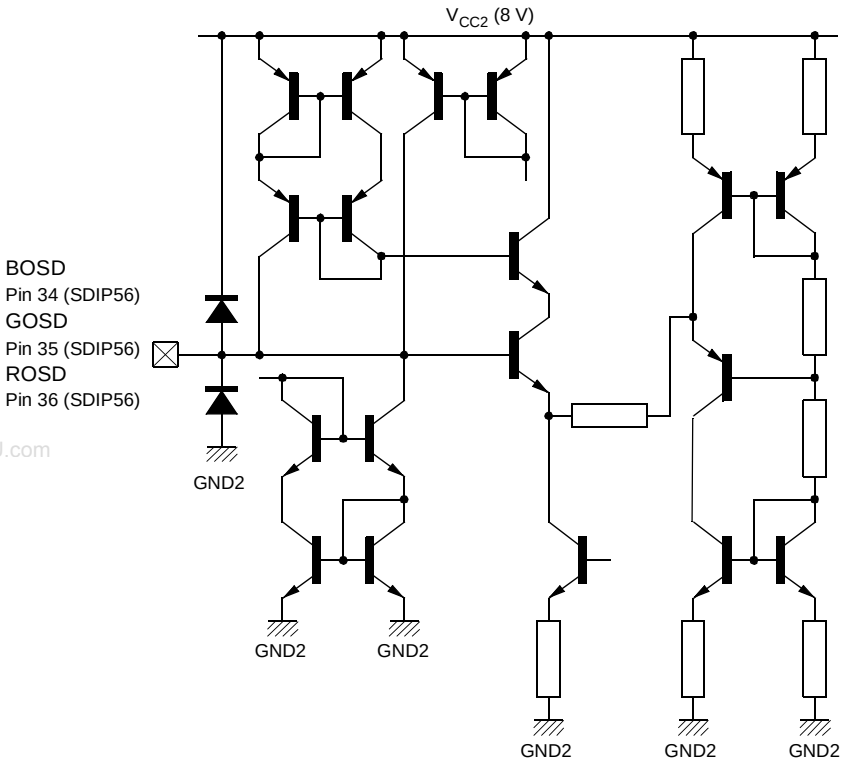

www.DataSheet4U.com

www.DataSheet4U.com

Figure 47. Half Contrast Input

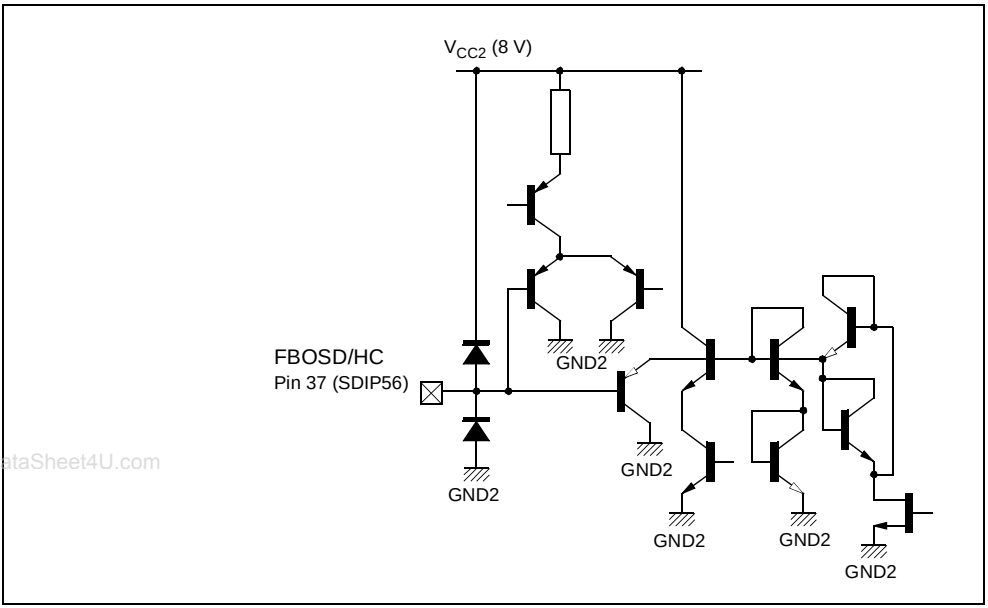

www.DataSheet4U.com

Figure 48. 3.5X MHz Crystal or Bell Filter Tuning Capacitor

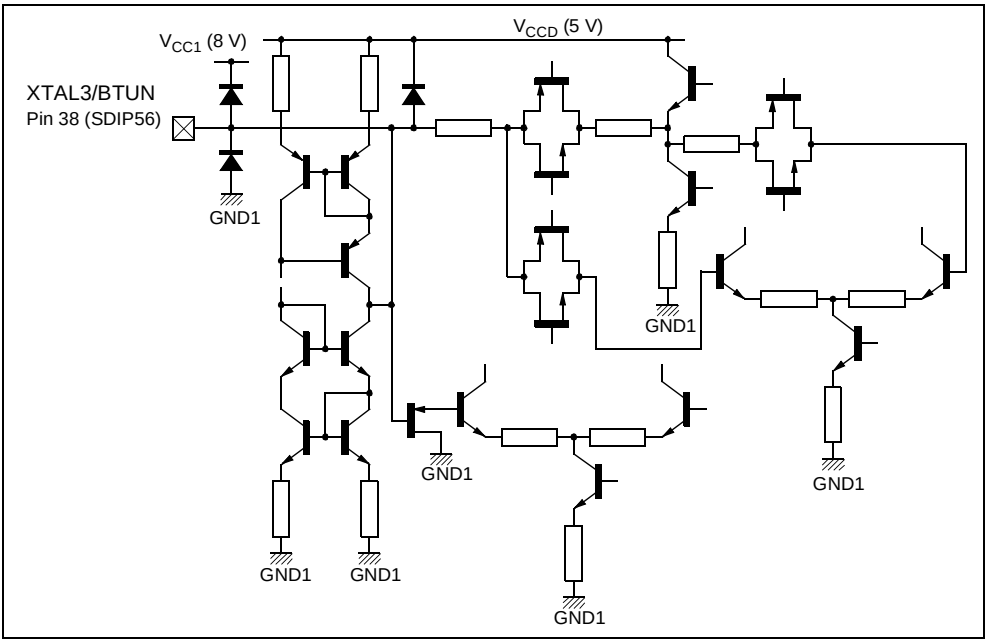

www.DataSheet4U.com

Figure 49. 4.43/3.5X MHz Crystal

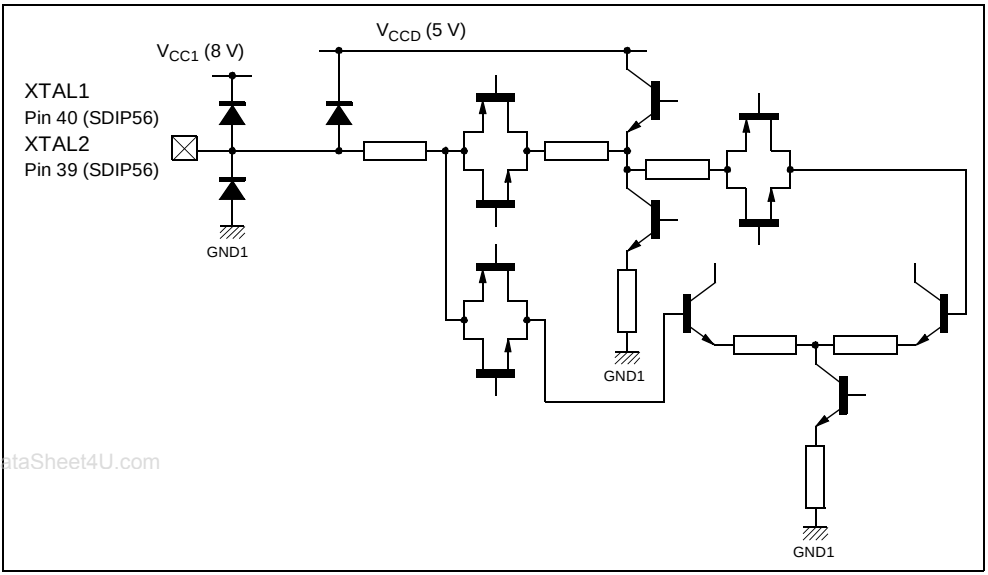

www.DataSheet4U.com

Figure 50. Chroma PLL Filter

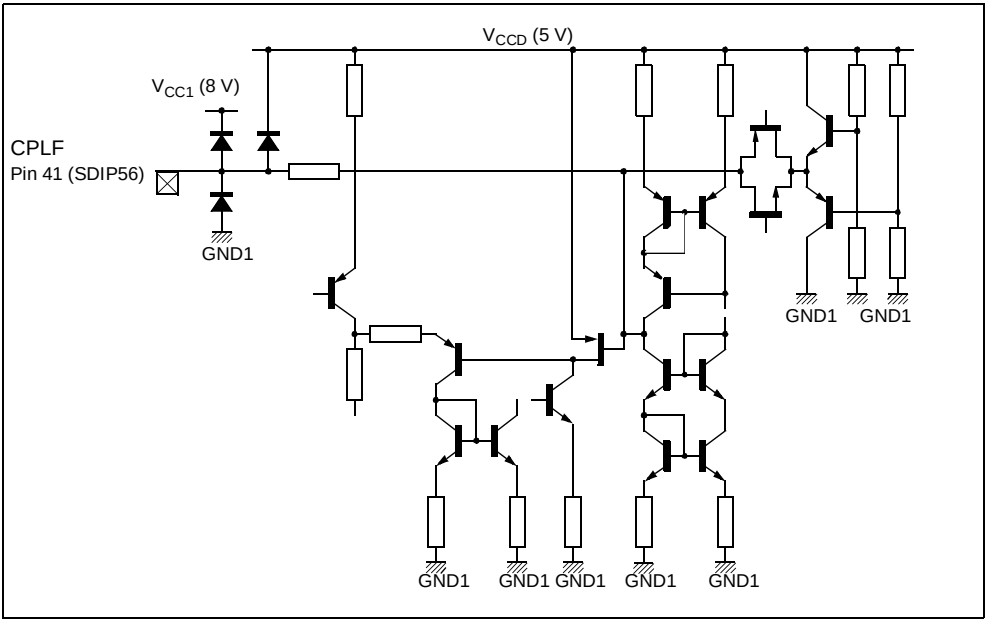

www.DataSheet4U.com

Figure 51. XTAL1 Control Pin, Vert. Amplitude DAC Output and Chroma Reference Signal Output

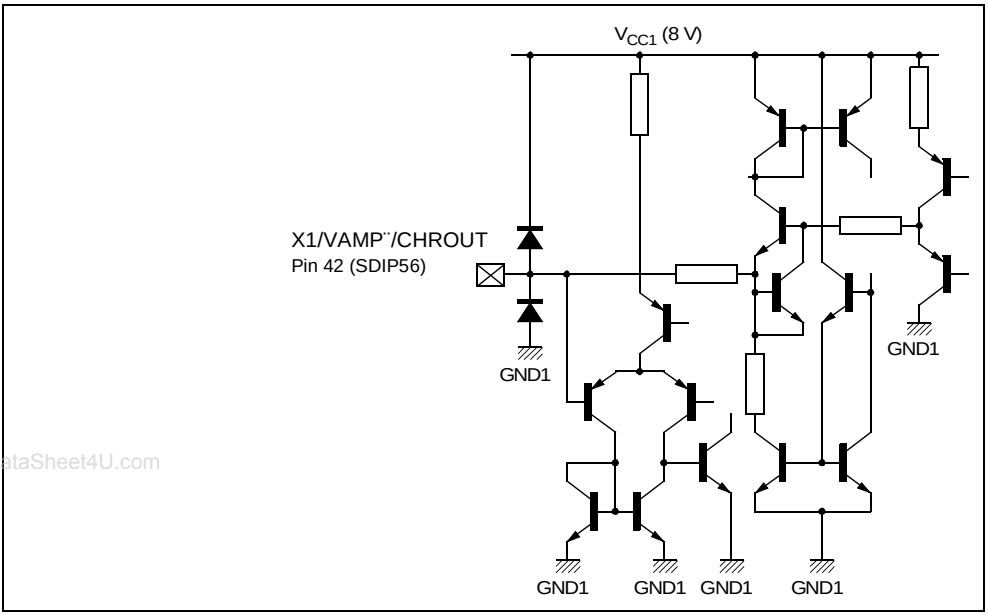

www.DataSheet4U.com

Figure 52. NTBC or Main CVBS Video Switch Output

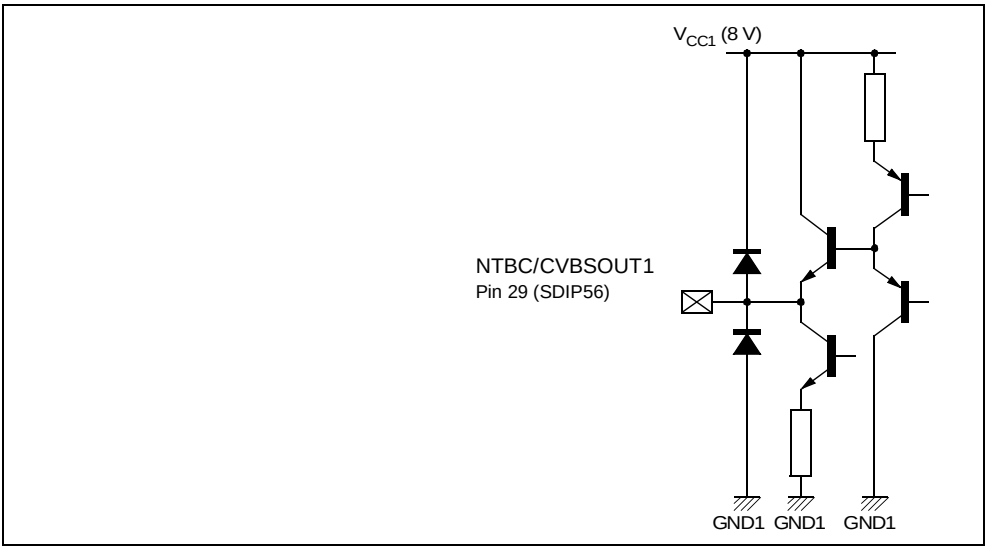

www.DataSheet4U.com

Figure 53. Second CVBS Video Switch Output

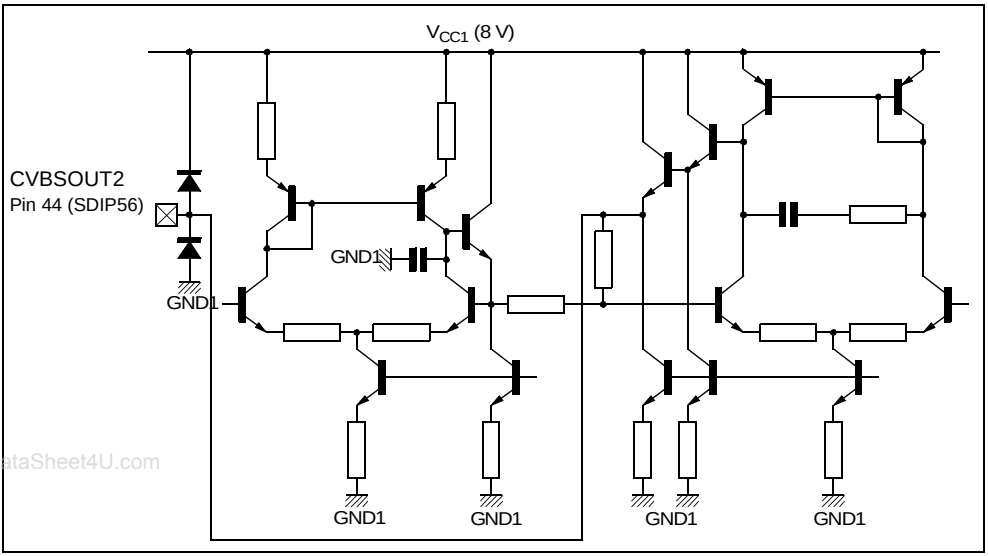

www.DataSheet4U.com

Figure 54. Beam Current Limiter Control Voltage and Safety Input

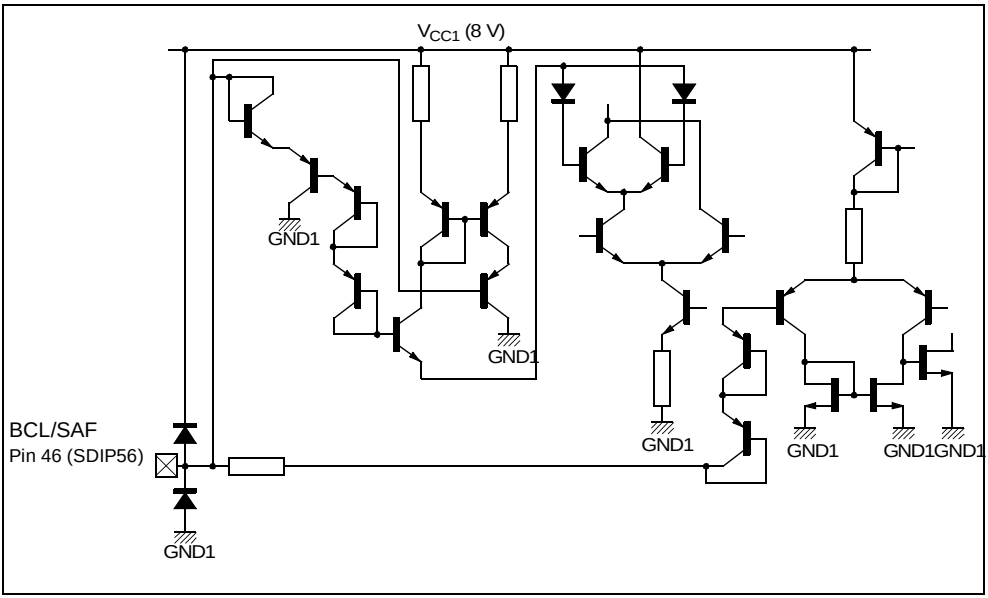

www.DataSheet4U.com

Figure 55. Vertical Output Pulse

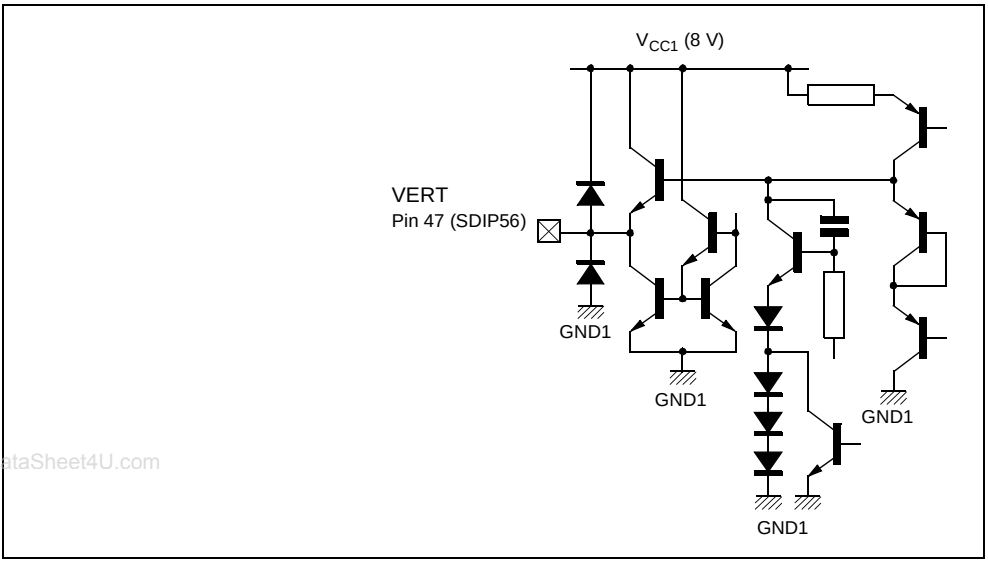

www.DataSheet4U.com

Figure 56. Horizontal Output Pulse

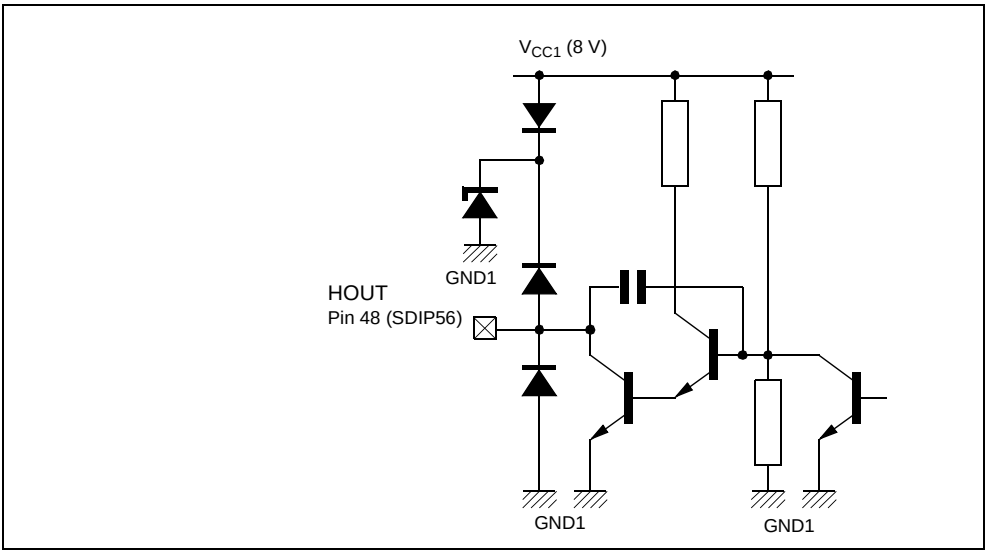

www.DataSheet4U.com

Figure 57. Line Flyback Input and Super-Sandcastle Output

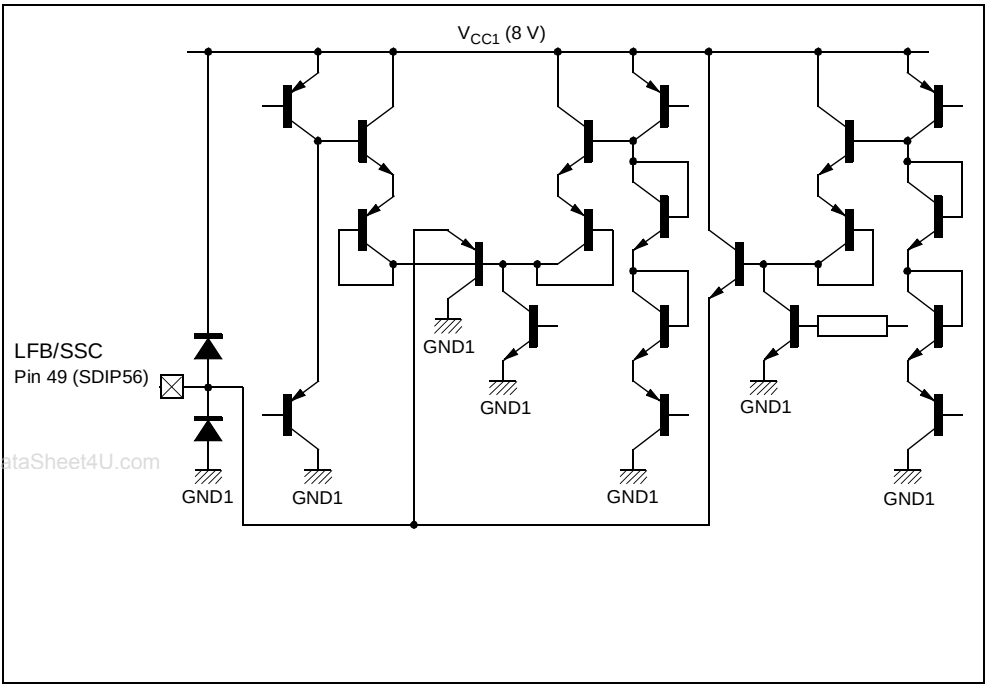

www.DataSheet4U.com

www.DataSheet4U.com

9 APPLICATION DIAGRAMS

Figure 58. STV2246H

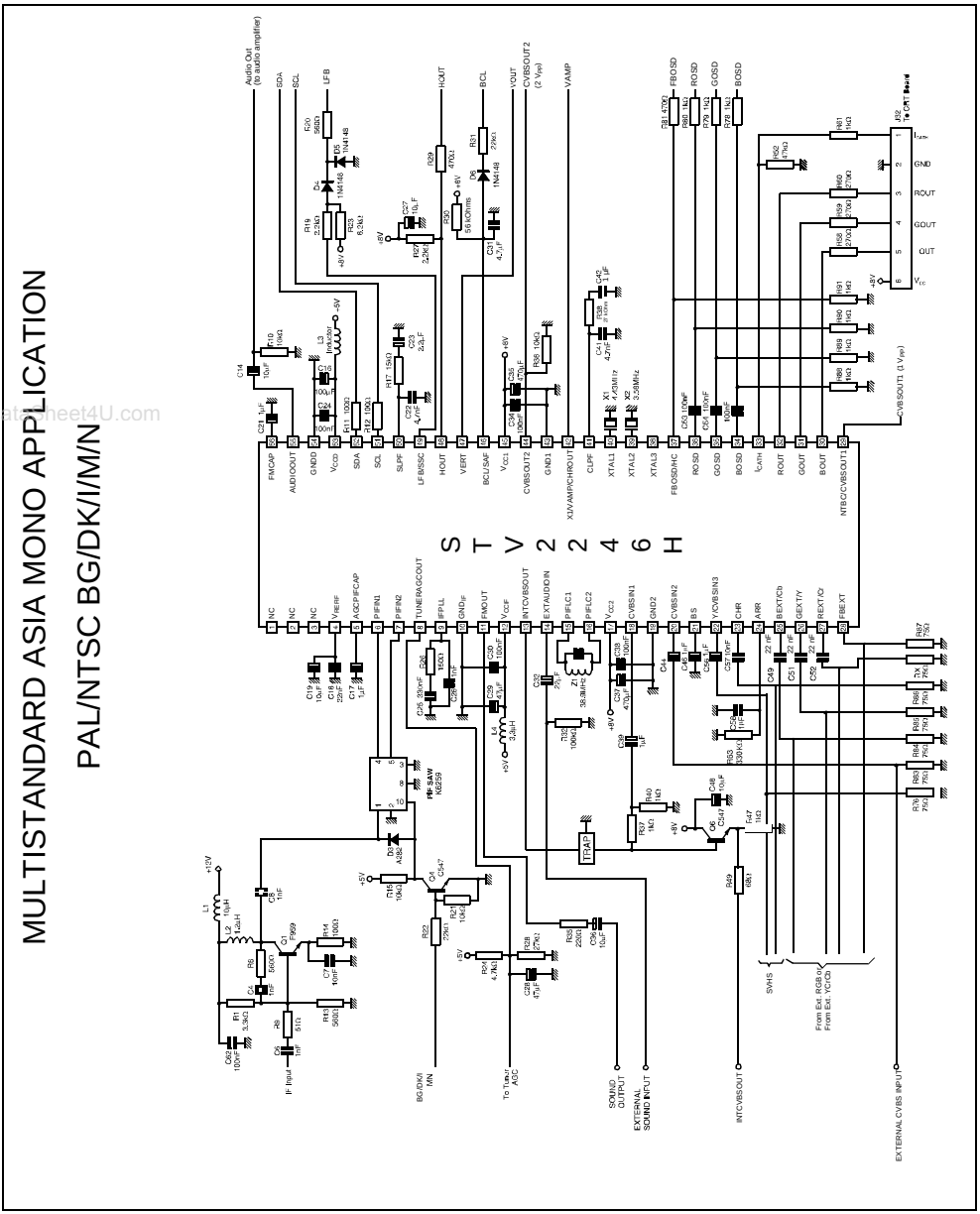

www.DataSheet4U.com

Figure 59. STV2247H

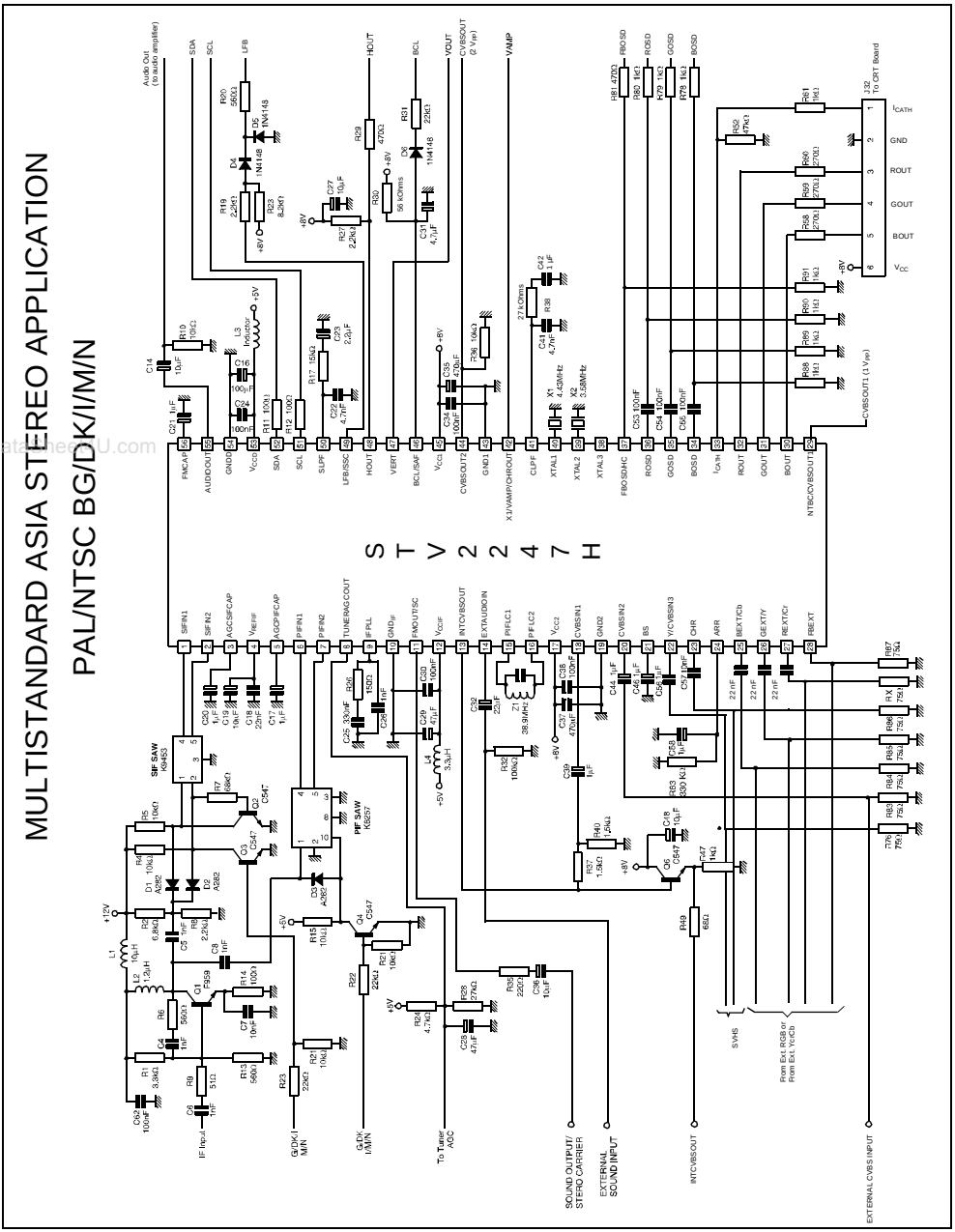

www.DataSheet4U.com

Figure 60. STV2248H

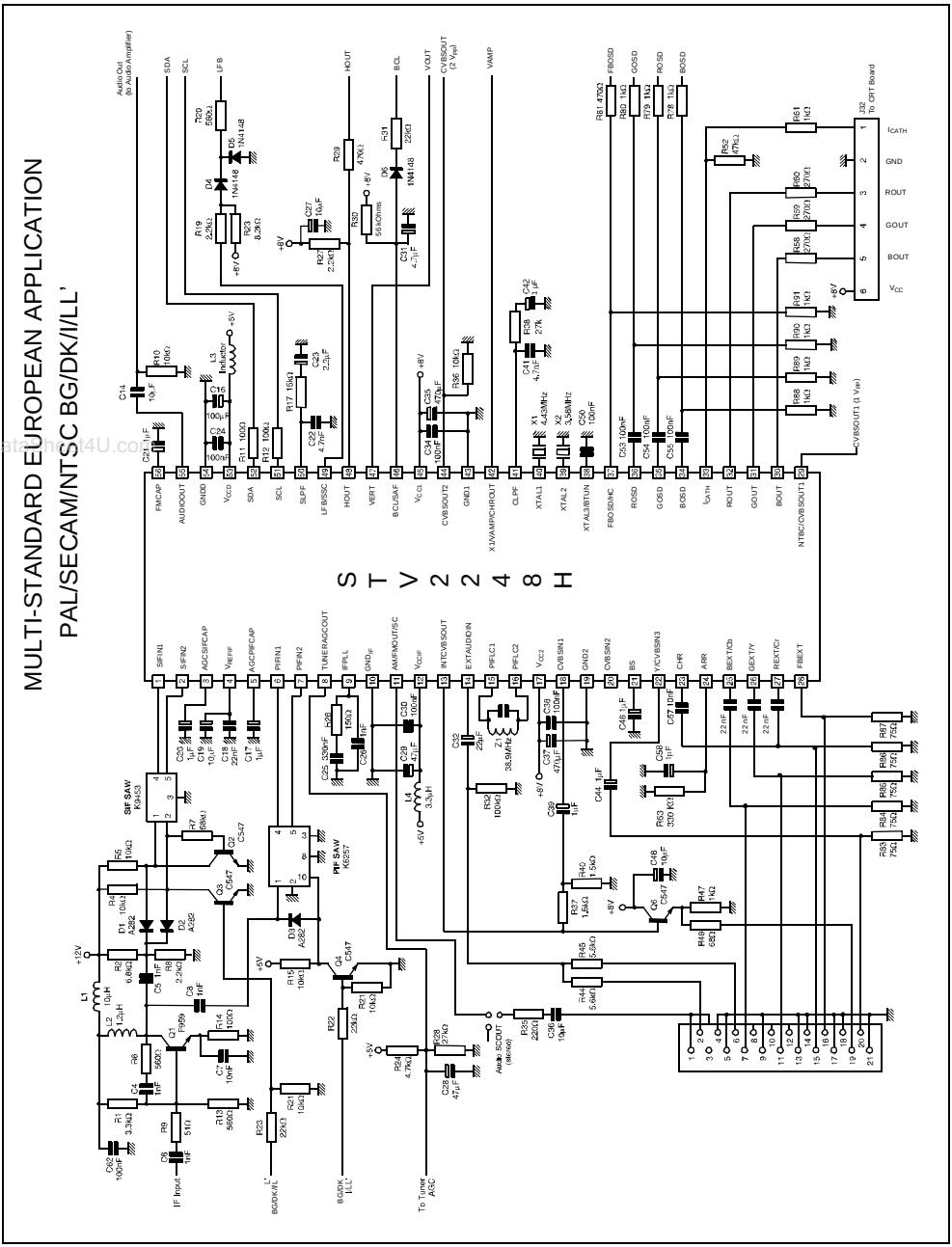

www.DataSheet4U.com

www.DataSheet4U.com

Figure 61. STV2238H (TQFP64)

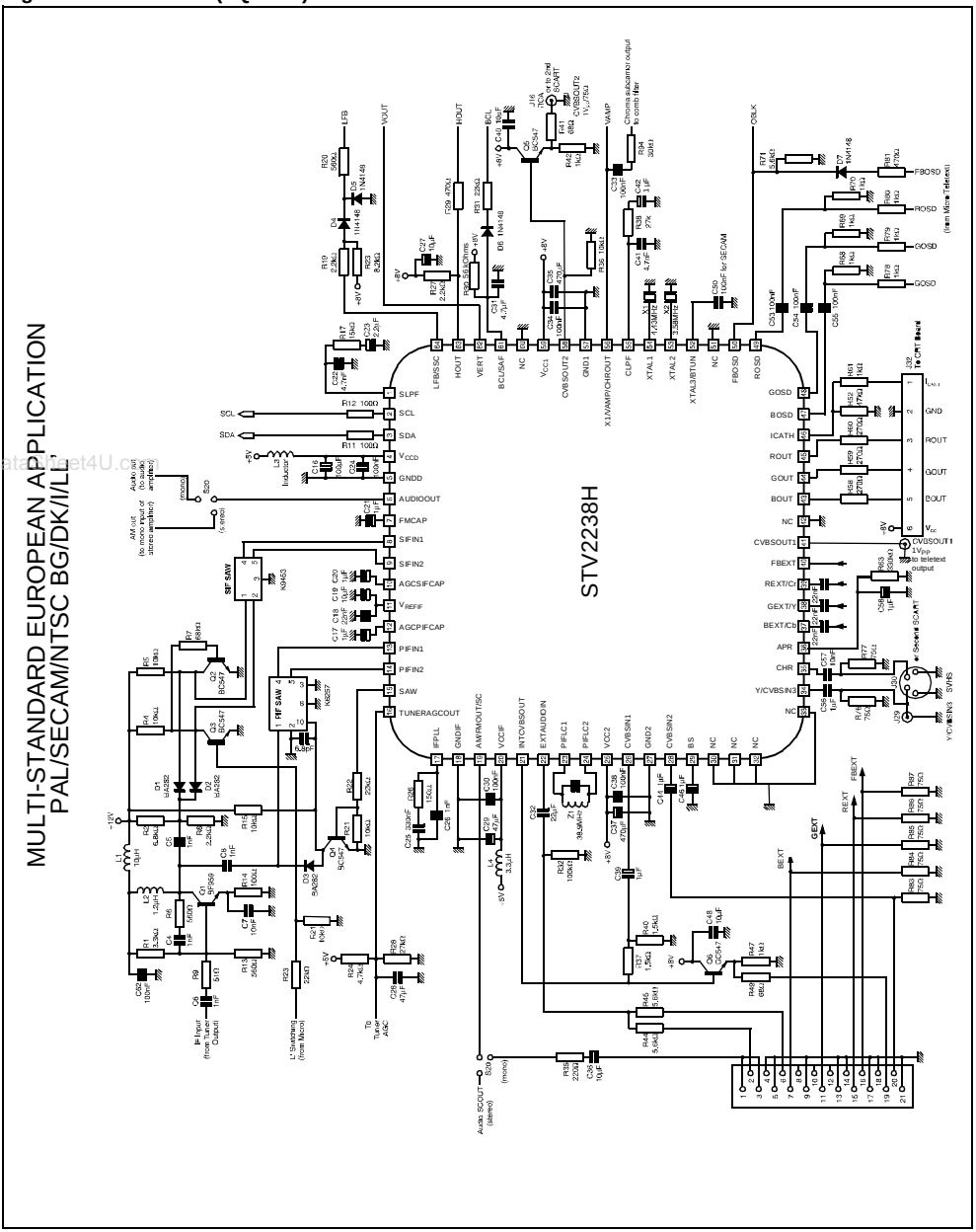

www.DataSheet4U.com

10 THERMAL CONSIDERATIONS FOR TQFP64 PACKAGE

Proper cooling of the STV223XH circuit (TQFP64 package) requires particular care.

The value of R_{thJA} given in the datasheet corresponds to the following condition:

The circuit is soldered ABOVE a printed circuit board (with as much ground plane as possible) and it exchanges freely with its environment by natural convection and radiation.

This 'ideal' condition may not be possible in a real TV set environment and R_{thJA} may increase above the given value.

In particular, the worst case is when the circuit is soldered BELOW the chassis board in a confined volume between the chassis board and the bottom of the TV box. In this case, R_{thJA} may increase.

Recommendations:

- to perform a quick theoretical temperature evaluation before making the chassis board
- later on, to perform detailed temperature measurements on the chassis board, in its real environment

Thermal data given in the data sheet allows an estimation of junction and case temperatures to be made.

For estimation on pin temperature, the following additional data, derived from a measurement on a typical chassis, can be used: R_{thJP} ~ 20°C/W;

Example of temperatures ESTIMATION:

www.DataSheet4U.com

(Reminder: only in the case where the circuit is soldered ABOVE the chassis board in a relatively 'free' environment).

Dissipated power: Pd = 1.3W.

Ambient temperature : Ta = 60°C (inside the TV set).

Junction temperature: Tj = Ta + R_{thJA} * Pd = 125°C.

Case temperature: Tc = Tj - R_{thJC} * Pd = 112°C.

Pins temperature: Tp = Tj - R_{thJP} * Pd = 99°C.

www.DataSheet4U.com

12 GENERAL PACKAGE INFORMATION

12.1 PACKAGE MECHANICAL DATA

Figure 62. 56-Pin Shrink Plastic Dual In Line Package, 600-mil Width

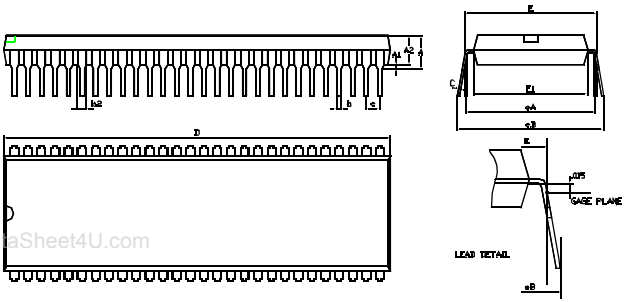

A			6.35			0.250
A1	0.38			0.015		
A2	3.18		4.95	0.125		0.195
b		0.41			0.016	
b2		0.89			0.035	
C	0.20		0.38	0.008		0.015
D	50.29		53.21	1.980		2.095
E		15.01			0.591	
E1	12.32		14.73	0.485		0.580
e		1.78			0.070	
eA		15.24			0.600	
eB			17.78			0.700
L	2.92		5.08	0.115		0.200
	Number of Pins					
N	56					

PDIP56S

www.DataSheet4U.com

Figure 63. 64-Pin Thin Quad Flat Package

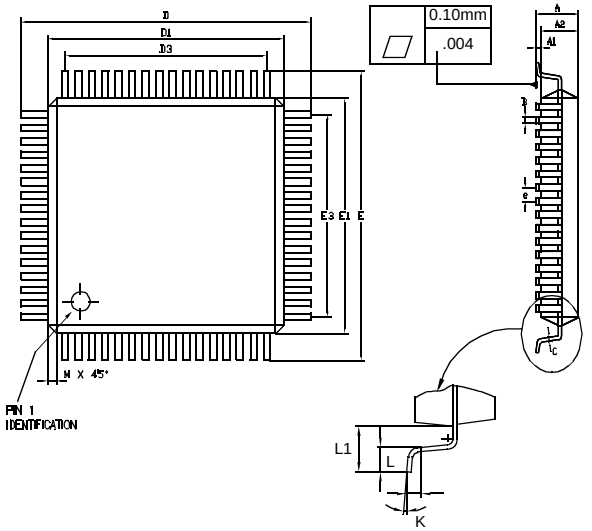

A			1.60			0.063
A1	0.05		0.15	0.002		0.006
A2	1.35	1.40	1.45	0.053	0.055	0.057
B	0.30	0.37	0.45	0.012	0.015	0.018
C	0.09		0.20	0.004		0.008
D		16.00			0.630	
D1		14.00			0.551	
D3		12.00			0.472	
E		16.00			0.630	
E1		14.00			0.551	
E3		12.00			0.472	
e		0.80			0.031	
K	0°	3.5°	7°			
L	0.45	0.60	0.75	0.018	0.024	0.030
L1		1.00			0.039	
	Number of Pins					
N	64		**ND**	16	**NE**	16

www.DataSheet4U.com