STP4NC60 - STP4NC60FP
STB4NC60-1

N-CHANNEL 600V - 1.8Ω - 4.2A TO-220/TO-220FP/I²PAK
PowerMesh™II MOSFET

TYPE	V_{DSS}	$R_{DS(on)}$	I_D
STP4NC60	600V	< 2.2Ω	4.2A
STP4NC60FP	600V	< 2.2Ω	4.2A
STB4NC60-1	600V	< 2.2Ω	4.2A

- TYPICAL $R_{DS}(on)$ = 1.8Ω
- EXTREMELY HIGH dv/dt CAPABILITY
- 100% AVALANCHE TESTED
- NEW HIGH VOLTAGE BENCHMARK
- GATE CHARGE MINIMIZED

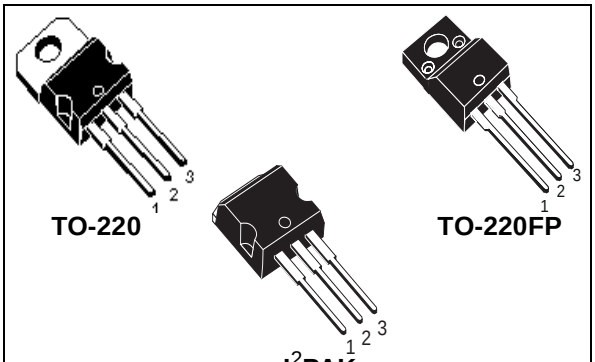

DESCRIPTION

The PowerMESH™II is the evolution of the first generation of MESH OVERLAY™. The layout refinements introduced greatly improve the Ron*area figure of merit while keeping the device at the leading edge for what concerns swithing speed, gate charge and ruggedness.

APPLICATIONS

- HIGH CURRENT, HIGH SPEED SWITCHING
- SWITH MODE POWER SUPPLIES (SMPS)
- DC-AC CONVERTERS FOR WELDING EQUIPMENT AND UNINTERRUPTIBLE POWER SUPPLIES AND MOTOR DRIVERS

INTERNAL SCHEMATIC DIAGRAM

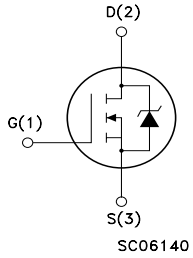

ABSOLUTE MAXIMUM RATINGS

Symbol	Parameter	Value		Unit
		STP(B)4NC60(-1)	STP4NC60FP	
V_{DS}	Drain-source Voltage (V_{GS} = 0)	600		V
V_{DGR}	Drain-gate Voltage (R_{GS} = 20 kΩ)	600		V
V_{GS}	Gate- source Voltage	±30		V
I_D	Drain Current (continuos) at T_C = 25°C	4.2	4.2(*)	A
I_D	Drain Current (continuos) at T_C = 100°C	2.6	2.6(*)	A
I_{DM} (●)	Drain Current (pulsed)	16.8	16.8(*)	A
P_{TOT}	Total Dissipation at T_C = 25°C	100	35	W
	Derating Factor	0.8	0.28	W/°C
dv/dt(1)	Peak Diode Recovery voltage slope	3.5	3.5	V/ns
V_{ISO}	Insulation Withstand Voltage (DC)	-	2500	V
T_{stg}	Storage Temperature	–65 to 150		°C
T_j	Max. Operating Junction Temperature			

(•)Pulse width limited by safe operating area

(*)Limited only by maximum Temperature allowed

(1)I_{SD} ≤4.2A, di/dt ≤300A/µs, V_{DD} ≤ $V_{(BR)DSS}$, T_j ≤ $T_{JMAX.}$

THERMAL DATA

		TO-220/I²PAK	TO-220FP	
Rthj-case	Thermal Resistance Junction-case Max	1.25	3.57	°C/W
Rthj-amb	Thermal Resistance Junction-ambient Max	62.5		°C/W
T_l	Maximum Lead Temperature For Soldering Purpose	300		°C

AVALANCHE CHARACTERISTICS

Symbol	Parameter	Max Value	Unit
I_{AR}	Avalanche Current, Repetitive or Not-Repetitive (pulse width limited by T_j max)	4.2	A
E_{AS}	Single Pulse Avalanche Energy (starting T_j = 25 °C, $I_D = I_{AR}$, V_{DD} = 50 V)	250	mJ

ELECTRICAL CHARACTERISTICS (TCASE = 25 °C UNLESS OTHERWISE SPECIFIED)

OFF

Symbol	Parameter	Test Conditions	Min.	Typ.	Max.	Unit
$V_{(BR)DSS}$	Drain-source Breakdown Voltage	I_D = 250 µA, V_{GS} = 0	600			V
I_{DSS}	Zero Gate Voltage Drain Current (V_{GS} = 0)	V_{DS} = Max Rating			1	µA
		V_{DS} = Max Rating, T_C = 125 °C			50	µA
I_{GSS}	Gate-body Leakage Current (V_{DS} = 0)	V_{GS} = ±30V			±100	nA

ON (1)

Symbol	Parameter	Test Conditions	Min.	Typ.	Max.	Unit
$V_{GS(th)}$	Gate Threshold Voltage	$V_{DS} = V_{GS}$, I_D = 250µA	2	3	4	V
$R_{DS(on)}$	Static Drain-source On Resistance	V_{GS} = 10V, I_D =1.5 A		1.8	2.2	Ω

DYNAMIC

Symbol	Parameter	Test Conditions	Min.	Typ.	Max.	Unit
g_{fs} (1)	Forward Transconductance	$V_{DS} > I_{D(on)} \times R_{DS(on)max}$, I_D = 2A		3.7		S
C_{iss}	Input Capacitance	V_{DS} = 25V, f = 1 MHz, V_{GS} = 0		475		pF
C_{oss}	Output Capacitance			72		pF
C_{rss}	Reverse Transfer Capacitance			10		pF

ELECTRICAL CHARACTERISTICS (CONTINUED)

SWITCHING ON

Symbol	Parameter	Test Conditions	Min.	Typ.	Max.	Unit
$t_{d(on)}$	Turn-on Delay Time	V_{DD} = 300V, I_D = 2A		14		ns
t_r	Rise Time	R_G = 4.7Ω V_{GS} = 10V (see test circuit, Figure 3)		14		ns
Q_g	Total Gate Charge	V_{DD} = 480V, I_D = 4A,		16.5	23.1	nC
Q_{gs}	Gate-Source Charge	V_{GS} = 10V		2.5		nC
Q_{gd}	Gate-Drain Charge			9		nC

SWITCHING OFF

Symbol	Parameter	Test Conditions	Min.	Typ.	Max.	Unit
$t_{r(Voff)}$	Off-voltage Rise Time	V_{DD} = 480V, I_D = 4A,		15		ns
t_f	Fall Time	R_G = 4.7Ω, V_{GS} = 10V (see test circuit, Figure 5)		19		ns
t_c	Cross-over Time			24		ns

SOURCE DRAIN DIODE

Symbol	Parameter	Test Conditions	Min.	Typ.	Max.	Unit
I_{SD}	Source-drain Current				4.2	A
I_{SDM} (2)	Source-drain Current (pulsed)				16.8	A
V_{SD} (1)	Forward On Voltage	I_{SD} = 4.2A, V_{GS} = 0			1.6	V
t_{rr}	Reverse Recovery Time	I_{SD} = 4A, di/dt = 100A/µs,		600		ns
Q_{rr}	Reverse Recovery Charge	V_{DD} = 100V, T_j = 150°C (see test circuit, Figure 5)		2.7		µC
I_{RRM}	Reverse Recovery Current			9		A

Note: 1. Pulsed: Pulse duration = 300 µs, duty cycle 1.5 %.
2. Pulse width limited by safe operating area.

Safe Operating Area for TO-220 / I²PAK

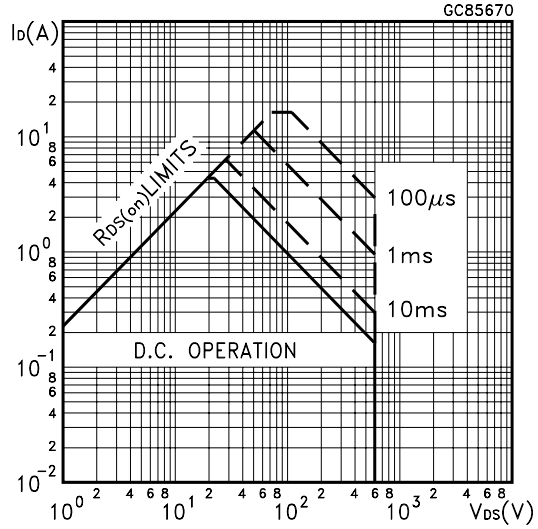

Safe Operating Area for TO-220FP

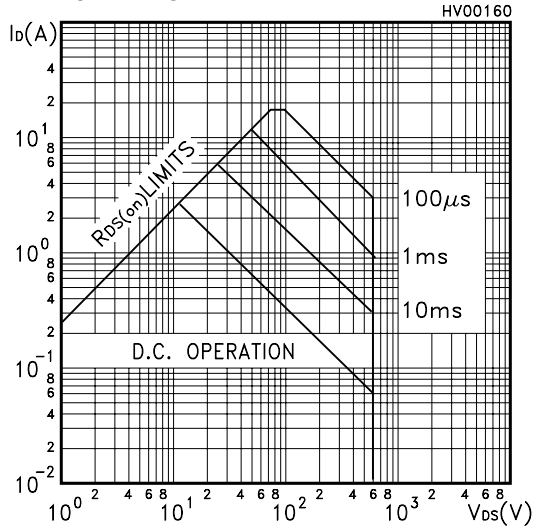

Thermal Impedance for To-220 / I²PAK

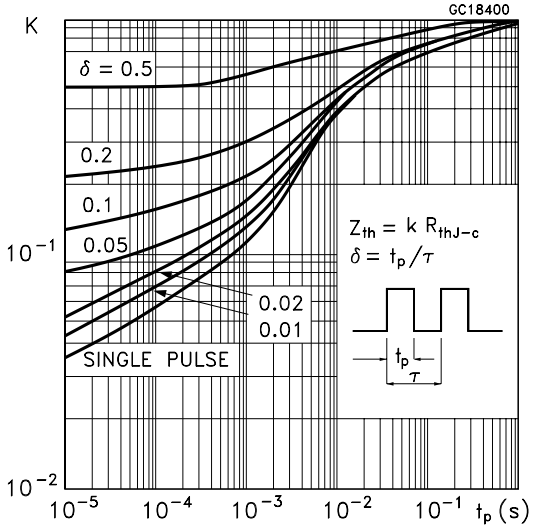

Thermal Impedance for TO-220FP

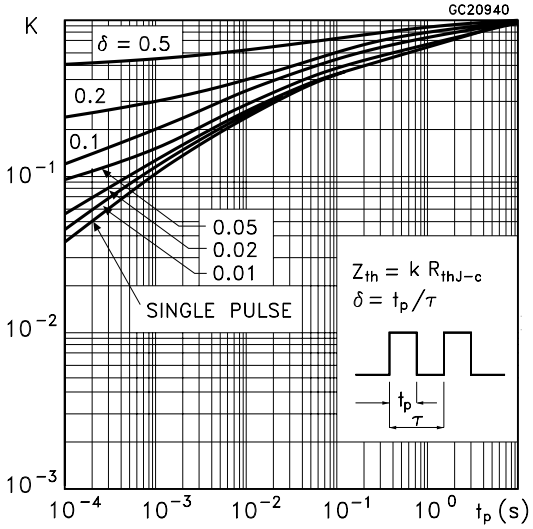

Output Characteristics

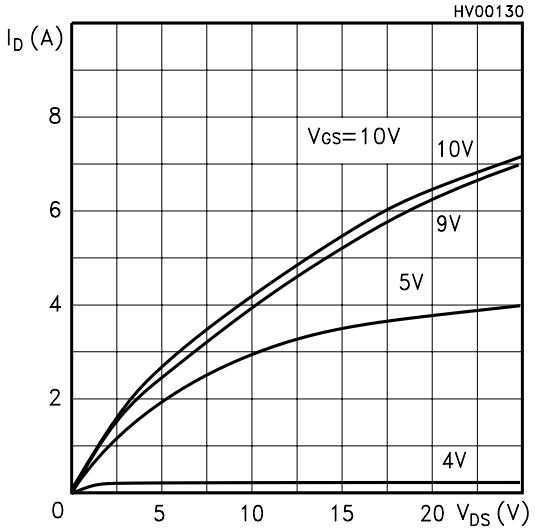

Transfer Characteristics

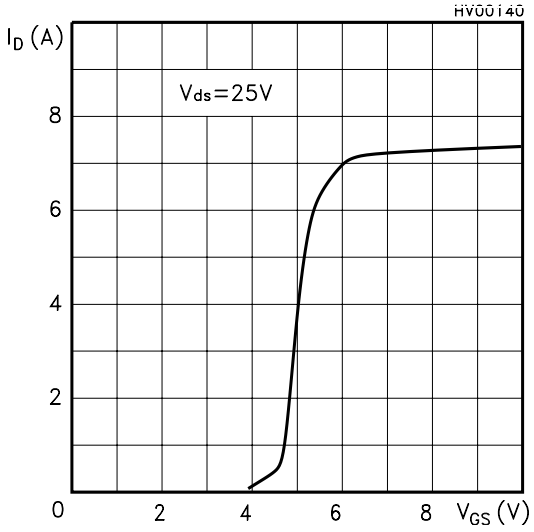

Transconductance

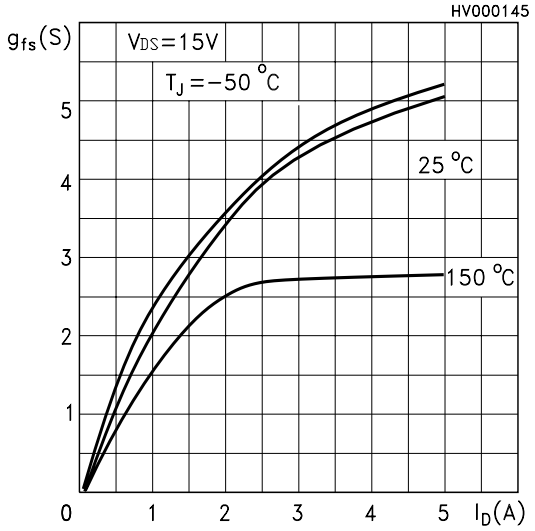

Static Drain-source On Resistance

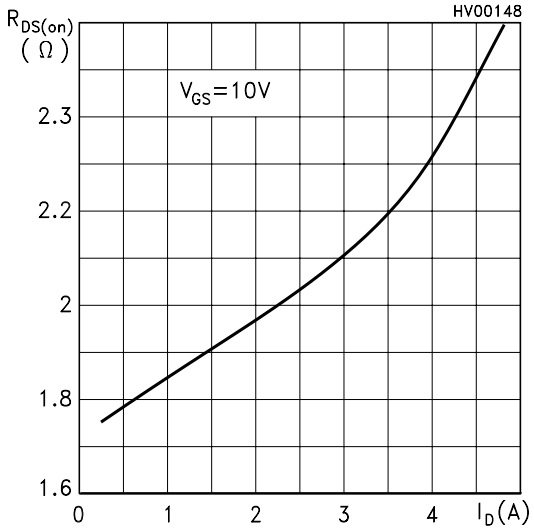

Gate Charge vs Gate-source Voltage

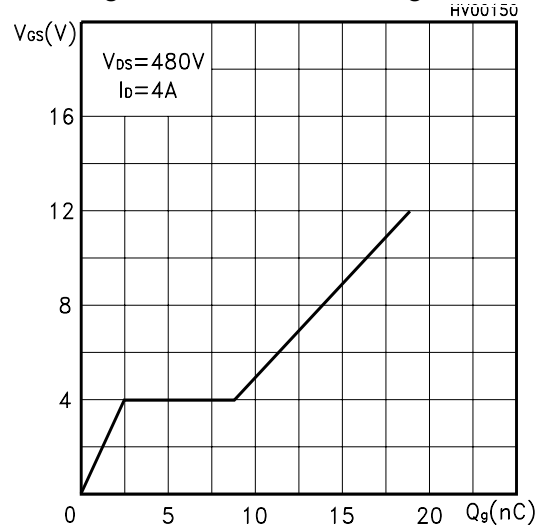

Capacitance Variations

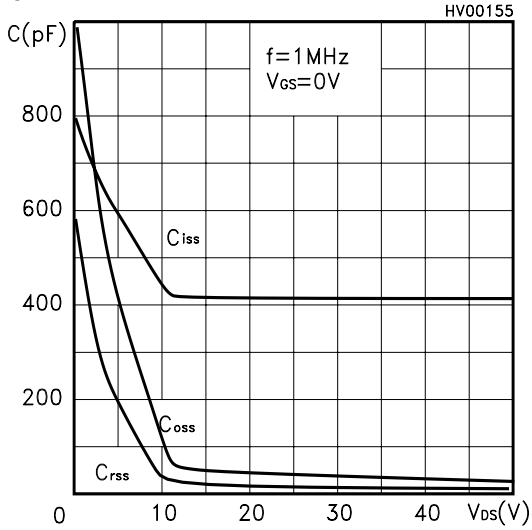

Normalized Gate Thereshold Voltage vs Temp.

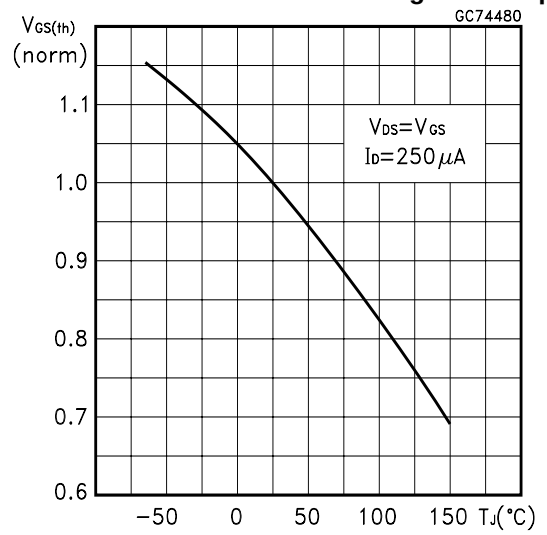

Normalized On Resistance vs Temperature

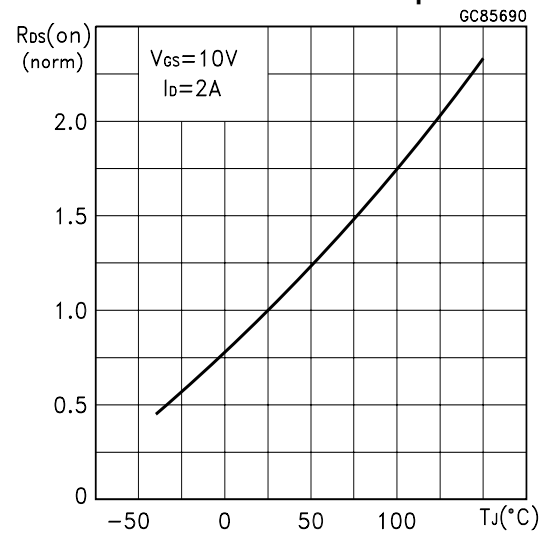

Source-drain Diode Forward Characteristics

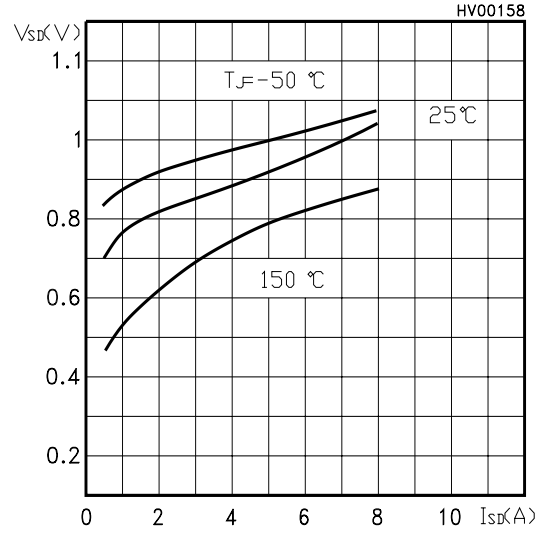

Fig. 1: Unclamped Inductive Load Test Circuit

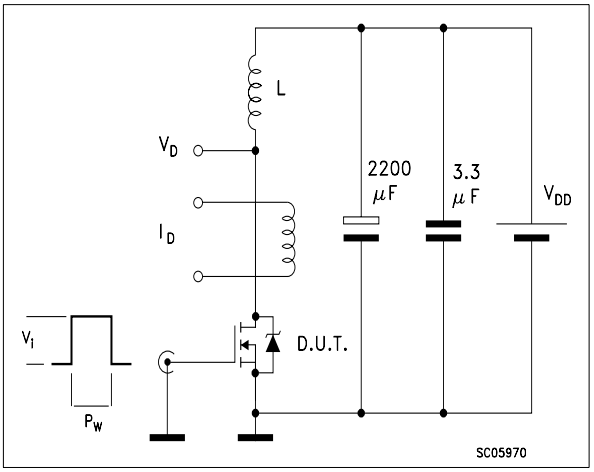

Fig. 2: Unclamped Inductive Waveform

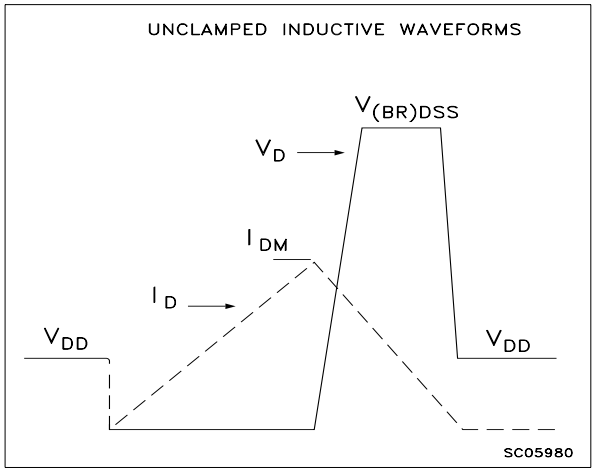

Fig. 3: Switching Times Test Circuits For Resistive Load

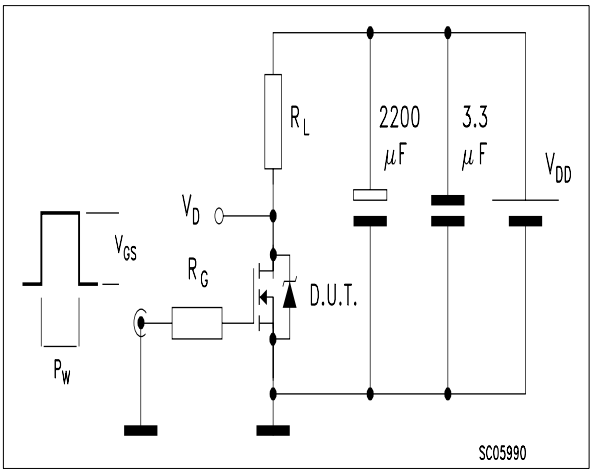

Fig. 4: Gate Charge test Circuit

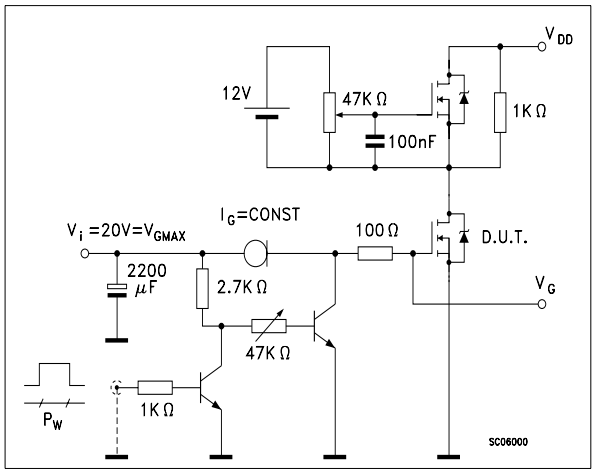

Fig. 5: Test Circuit For Inductive Load Switching And Diode Recovery Times

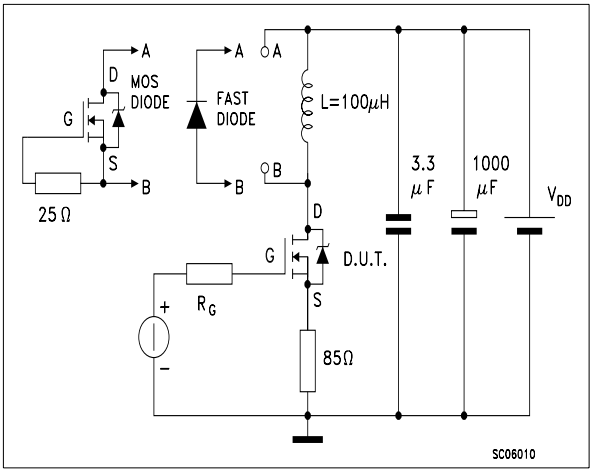

TO-220 MECHANICAL DATA

DIM.	mm			inch		
	MIN.	TYP.	MAX.	MIN.	TYP.	MAX.
A	4.40		4.60	0.173		0.181
C	1.23		1.32	0.048		0.051
D	2.40		2.72	0.094		0.107
D1		1.27			0.050	
E	0.49		0.70	0.019		0.027
F	0.61		0.88	0.024		0.034
F1	1.14		1.70	0.044		0.067
F2	1.14		1.70	0.044		0.067
G	4.95		5.15	0.194		0.203
G1	2.4		2.7	0.094		0.106
H2	10.0		10.40	0.393		0.409
L2		16.4			0.645	
L4	13.0		14.0	0.511		0.551
L5	2.65		2.95	0.104		0.116
L6	15.25		15.75	0.600		0.620
L7	6.2		6.6	0.244		0.260
L9	3.5		3.93	0.137		0.154
DIA.	3.75		3.85	0.147		0.151

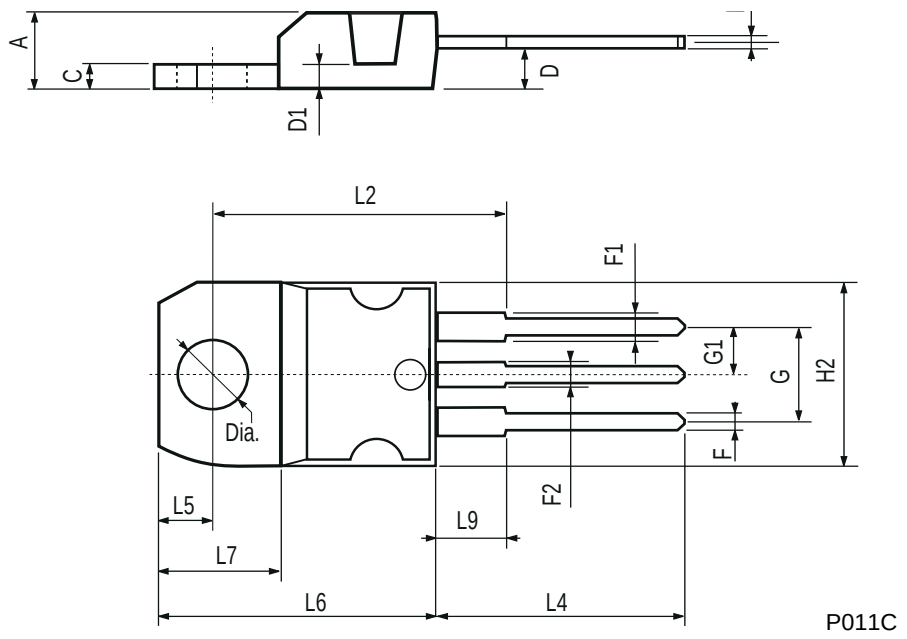

TO-220FP MECHANICAL DATA

DIM.	mm			inch		
	MIN.	TYP.	MAX.	MIN.	TYP.	MAX.
A	4.4		4.6	0.173		0.181
B	2.5		2.7	0.098		0.106
D	2.5		2.75	0.098		0.108
E	0.45		0.7	0.017		0.027
F	0.75		1	0.030		0.039
F1	1.15		1.7	0.045		0.067
F2	1.15		1.7	0.045		0.067
G	4.95		5.2	0.195		0.204
G1	2.4		2.7	0.094		0.106
H	10		10.4	0.393		0.409
L2		16			0.630	
L3	28.6		30.6	1.126		1.204
L4	9.8		10.6	0.385		0.417
L6	15.9		16.4	0.626		0.645
L7	9		9.3	0.354		0.366
Ø	3		3.2	0.118		0.126

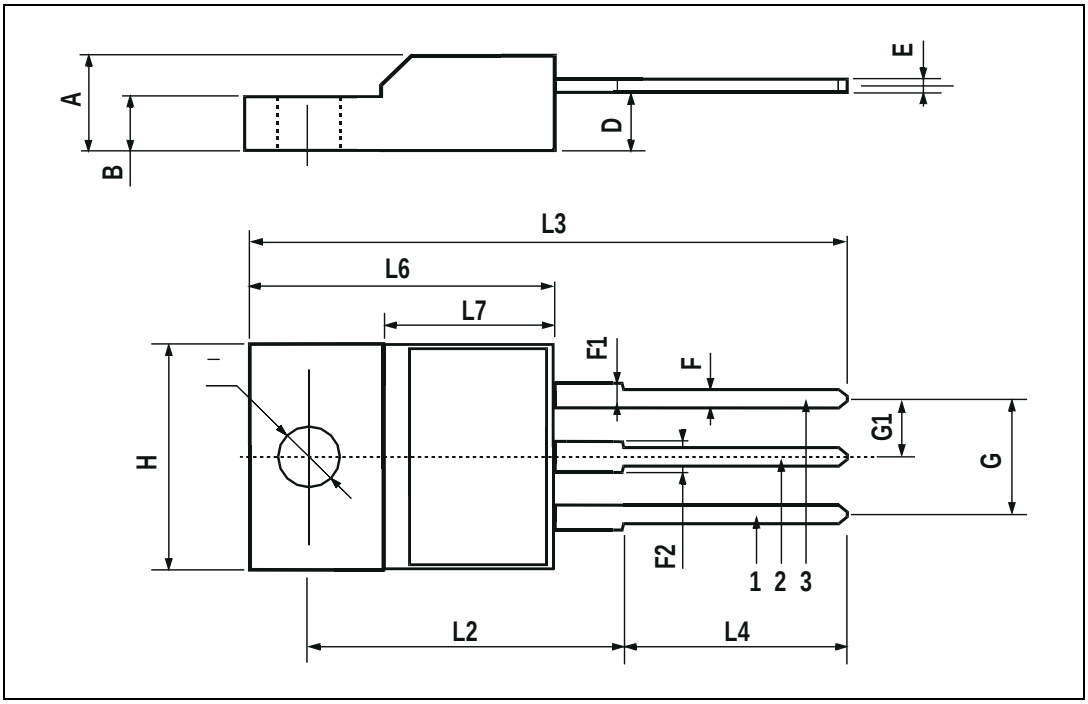

TO-262 (I^2PAK) MECHANICAL DATA

DIM.	mm			inch		
	MIN.	TYP.	MAX.	MIN.	TYP.	MAX.
A	4.4		4.6	0.173		0.181
A1	2.49		2.69	0.098		0.106
B	0.7		0.93	0.027		0.036
B2	1.14		1.7	0.044		0.067
C	0.45		0.6	0.017		0.023
C2	1.23		1.36	0.048		0.053
D	8.95		9.35	0.352		0.368
e	2.4		2.7	0.094		0.106
E	10		10.4	0.393		0.409
L	13.1		13.6	0.515		0.531
L1	3.48		3.78	0.137		0.149
L2	1.27		1.4	0.050		0.055

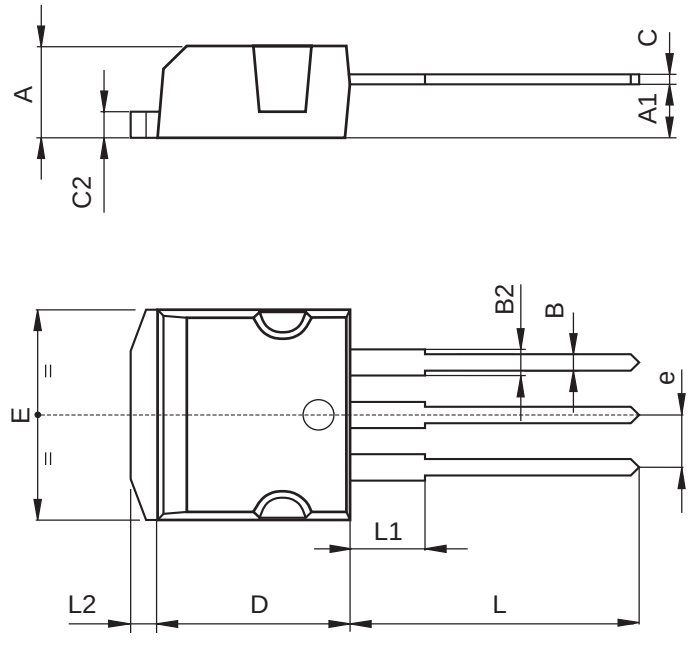

P011P5/E

Information furnished is believed to be accurate and reliable. However, STMicroelectronics assumes no responsibility for the consequences of use of such information nor for any infringement of patents or other rights of third parties which may result from its use. No license is granted by implication or otherwise under any patent or patent rights of STMicroelectronics. Specification mentioned in this publication are subject to change without notice. This publication supersedes and replaces all information previously supplied. STMicroelectronics products are not authorized for use as critical components in life support devices or systems without express written approval of STMicroelectronics.

The ST logo is a trademark of STMicroelectronics

© 2000 STMicroelectronics – Printed in Italy – All Rights Reserved

STMicroelectronics GROUP OF COMPANIES

Australia - Brazil - China - Finland - France - Germany - Hong Kong - India - Italy - Japan - Malaysia - Malta - Morocco - Singapore - Spain - Sweden - Switzerland - United Kingdom - U.S.A.

http://www.st.com

This datasheet has been download from:

www.datasheetcatalog.com

Datasheets for electronics components.