LH216S92T SERVICE MANUAL

INDEX:

Part1:

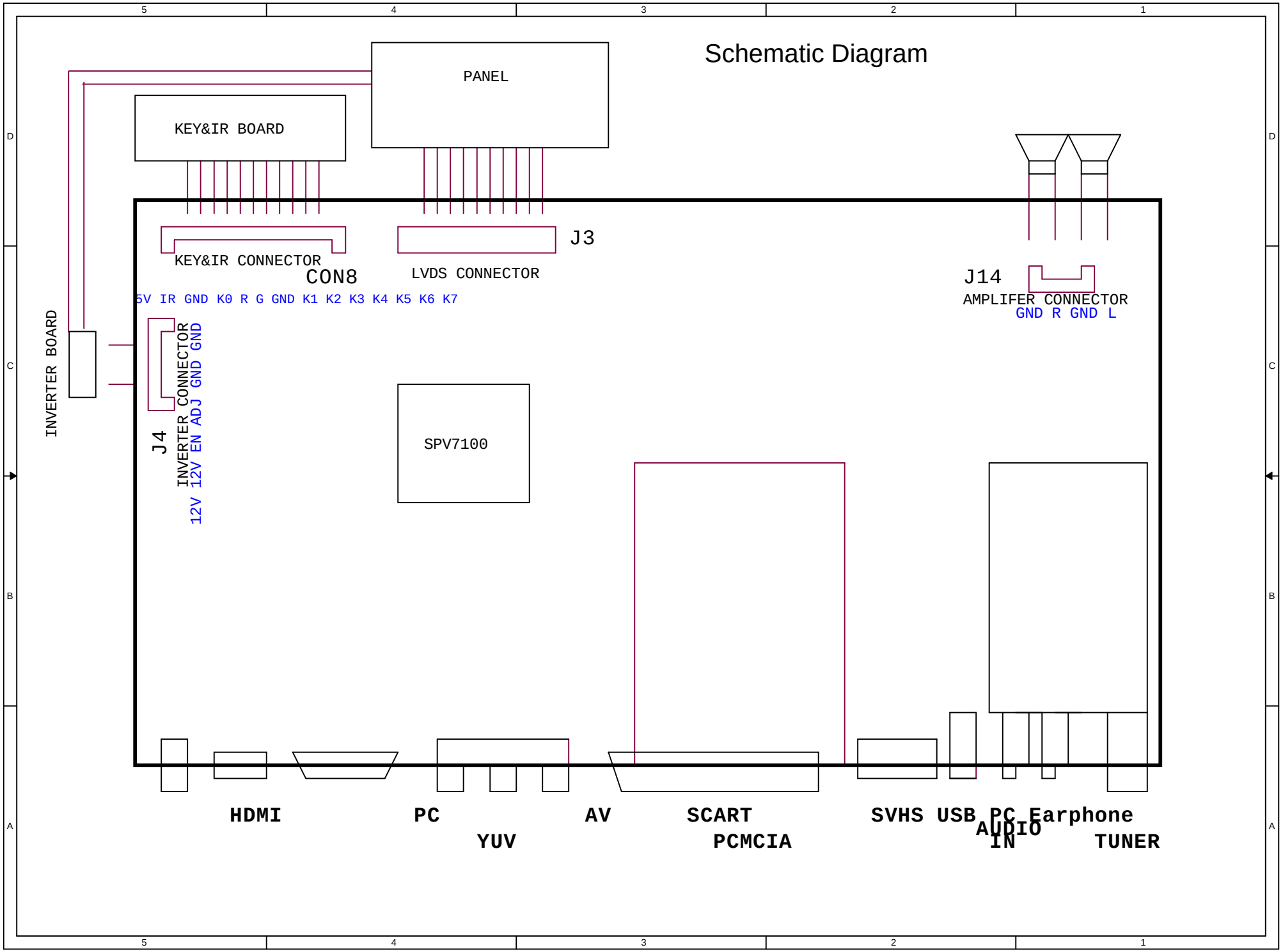
Schematic Diagram
PANEL
KEY&IR BOARD
KEY&IR CONNECTOR
CON8
LVDS CONNECTOR
J3
5V IR GND K0 R G GND K1 K2 K3 K4 K5 K6 K7
J14
AMPLIFER CONNECTOR
GND R GND L
INVERTER BOARD
J4
INVERTER CONNECTOR
12V EN ADJ GND GND
12V
SPV7100
HDMI
PC
YUV
AV
SCART
PCMCIA
SVHS
USB
PC AUDIO IN
Earphone
TUNER

Printed Circuit

TV Main Board (Top View)

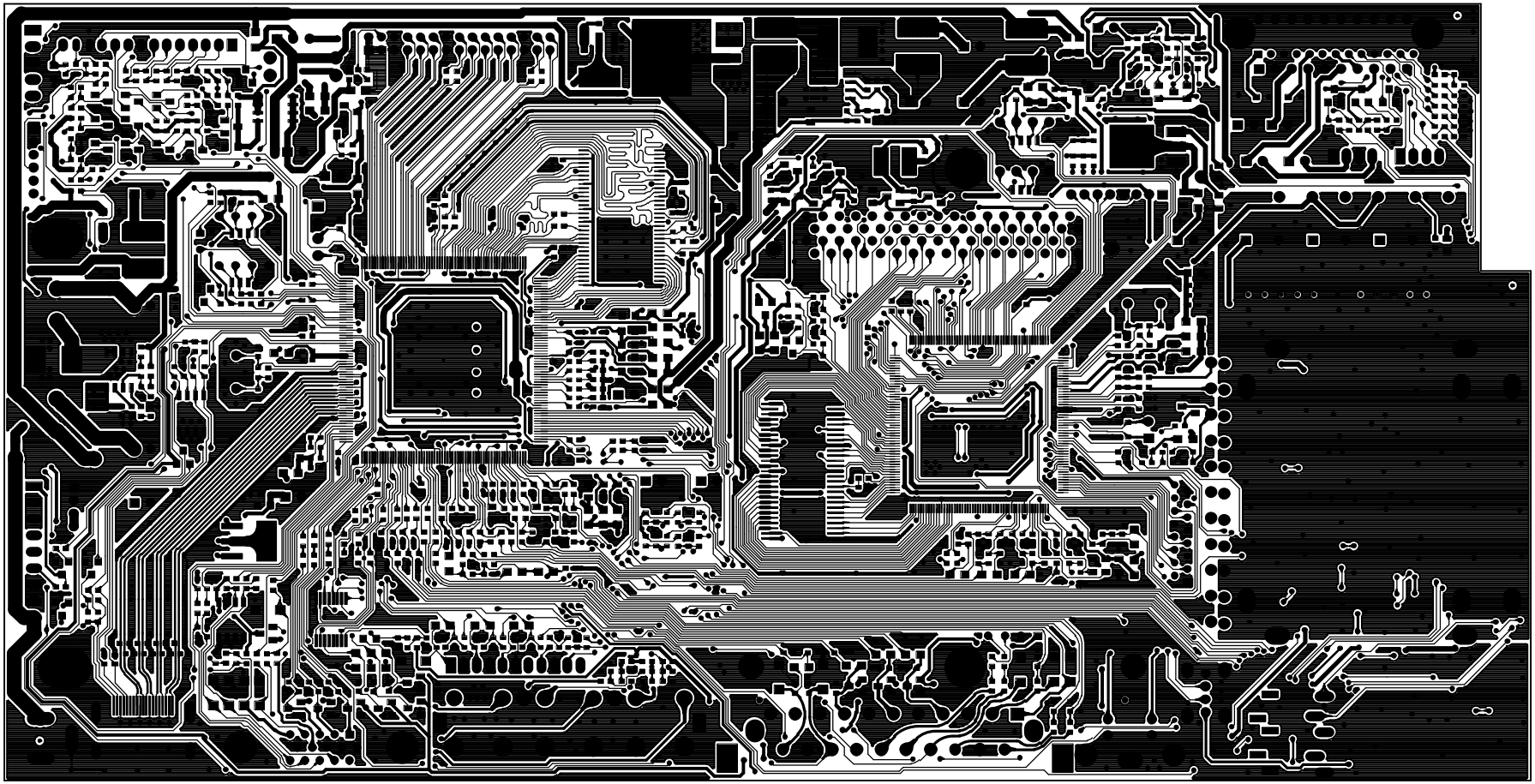

TV Main Board（Bottom view）

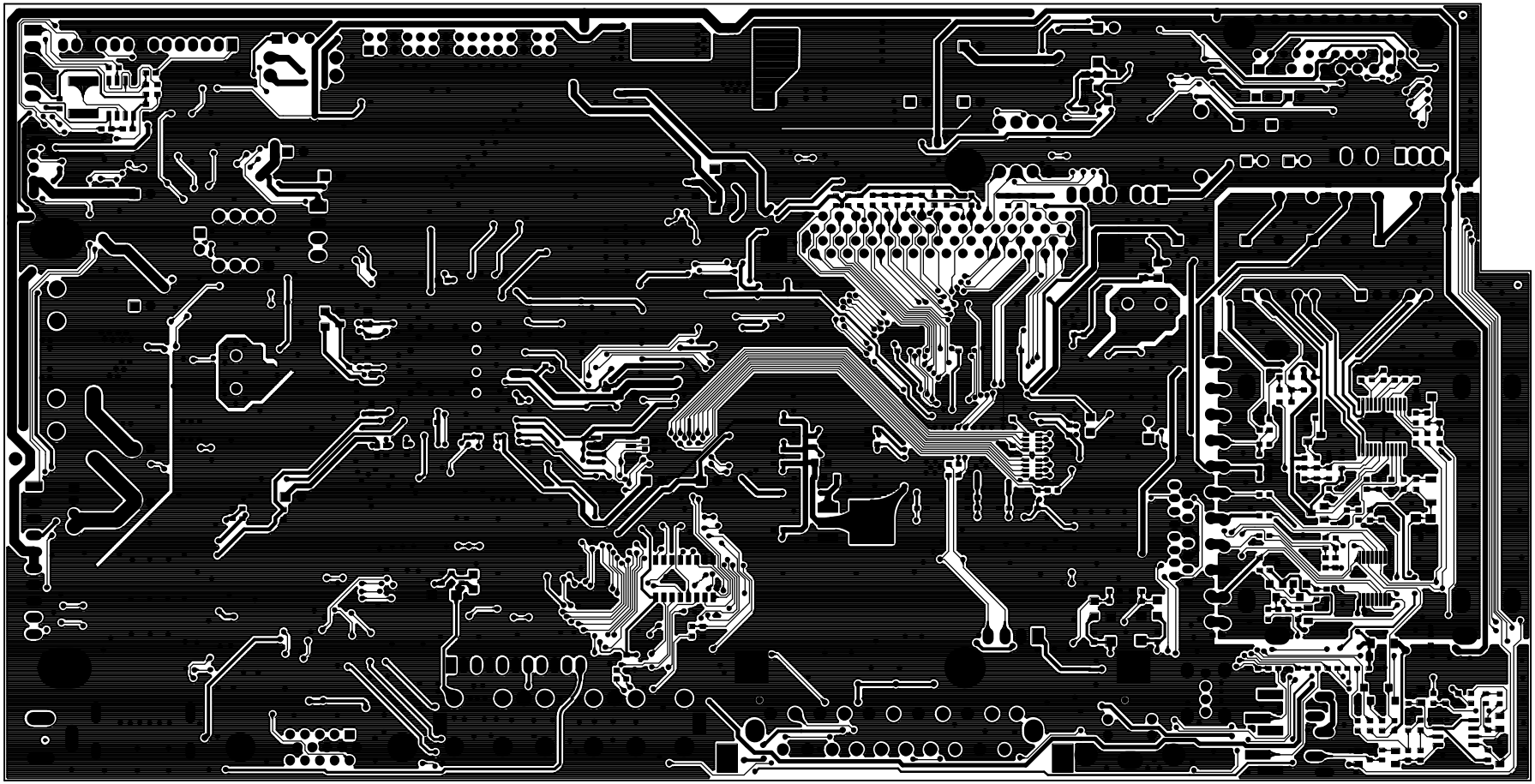

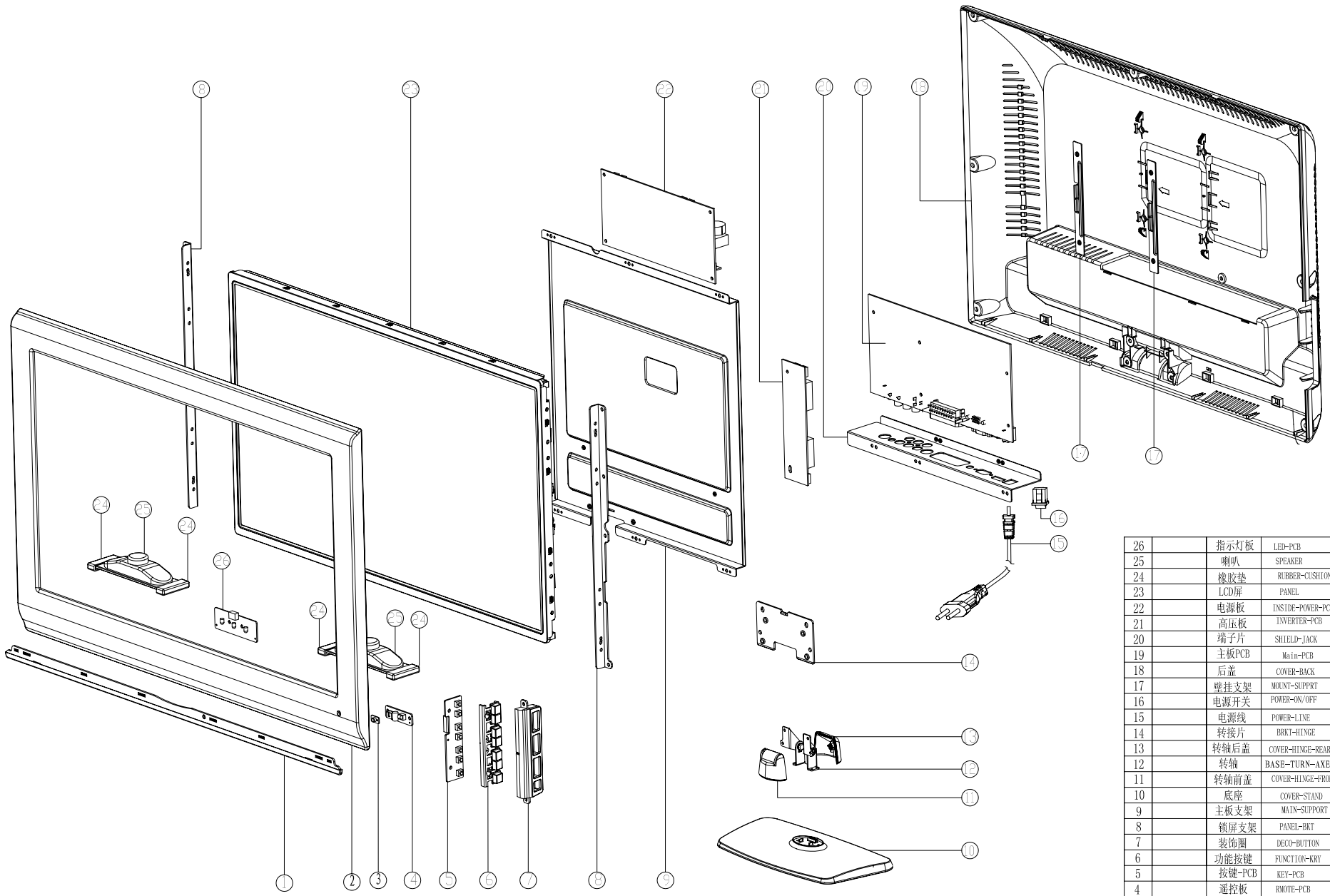

REV	ITEM	DESCRIPTION	PREPARED	APPROVED

NO	物料编码	物料名称	英文名称	用量	位 置(position)	预装
26		指示灯板	LED-PCB	1		
25		喇叭	SPEAKER	2		
24		橡胶垫	RUBBER-CUSHION	4		
23		LCD屏	PANEL	1		
22		电源板	INSIDE-POWER-PCB	1		
21		高压板	INVERTER-PCB	1		
20		端子片	SHIELD-JACK	1		
19		主板PCB	Main-PCB	1		
18		后盖	COVER-BACK	1		
17		壁挂支架	MOUNT-SUPPRT	2		
16		电源开关	POWER-ON/OFF	1		
15		电源线	POWER-LINE	1		
14		转接片	BRKT-HINGE	1		
13		转轴后盖	COVER-HINGE-REAR	1		
12		转轴	BASE-TURN-AXES	1		
11		转轴前盖	COVER-HINGE-FRONT	1		
10		底座	COVER-STAND	1		
9		主板支架	MAIN-SUPPORT	1		
8		锁屏支架	PANEL-BKT	2		
7		装饰圈	DECO-BUTTON	1		
6		功能按键	FUNCTION-KRY	1		
5		按键-PCB	KEY-PCB	1		
4		遥控板	RMOTE-PCB	1		
3		遥控镜	LENS-SENSOR	1		
2		前盖	COVER-FRONT	1		
1		装饰条	DECO-BAND	1		

DRAWN	CHHEZH 2010/4/3	UNLESS OTHERWISE SPECIFIED	GHTECH R & D CENTRE
CHECKED			MATL.
APPRD.			FINISH
DIMENSIONS IN MILLIMETERS			

TITLE	LH2659E-EXPLOD	
MODEL NO.	LHE-6598	
A1	PART NO. XXXXXXXX	DWG. NO. XXXXXXXX	SHEET 01
SCALE	QTY.	SHEET 1 OF 1

IC Introduction

OCP2030

SWITCHING BUCK REGULATOR

■ General Description

The OCP2030 is a buck topology of switching regulator for wide operating voltage applications field. The OCP2030 includes a high current P-MOSFET, high precision reference (0.5V) for comparing output voltage with feedback amplifier, an internal dead-time controller and oscillator for controlling the maximum duty cycle and PWM frequency, and has power-on programmable soft start time and short circuit PMOS turn-off and auto re-start protection functions.

■ Features

- Precision feedback reference voltage: 0.5V (2%)
- Wide supply voltage operating range: 3.6 to 20V
- Low current consumption: 3mA
- Internal fixed oscillator frequency: Typ. 360KHz
- Programmable Soft-Start function (SS)
- Short Circuit Shutdown and Auto Re-start function(ARSCP)
- Built-in P-MOSFET for 3A loading capability
- Package: SOP8

■ Pin Configuration

Top View

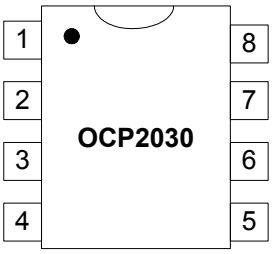

Name	No.	Status	Description
VCC	1	P	IC Power Supply (PMOS Source)
SS/SCP	2	I	Connecting with a Soft-start & ARSCP timing capacitor
IN-	3	I	Error Amplifier Inverting Input
FB	4	O	Error Amplifier Compensation Output
GND	5	P	IC Ground
	6		
LX	7	O	PMOS High Current Output
	8		

■ Block Diagram

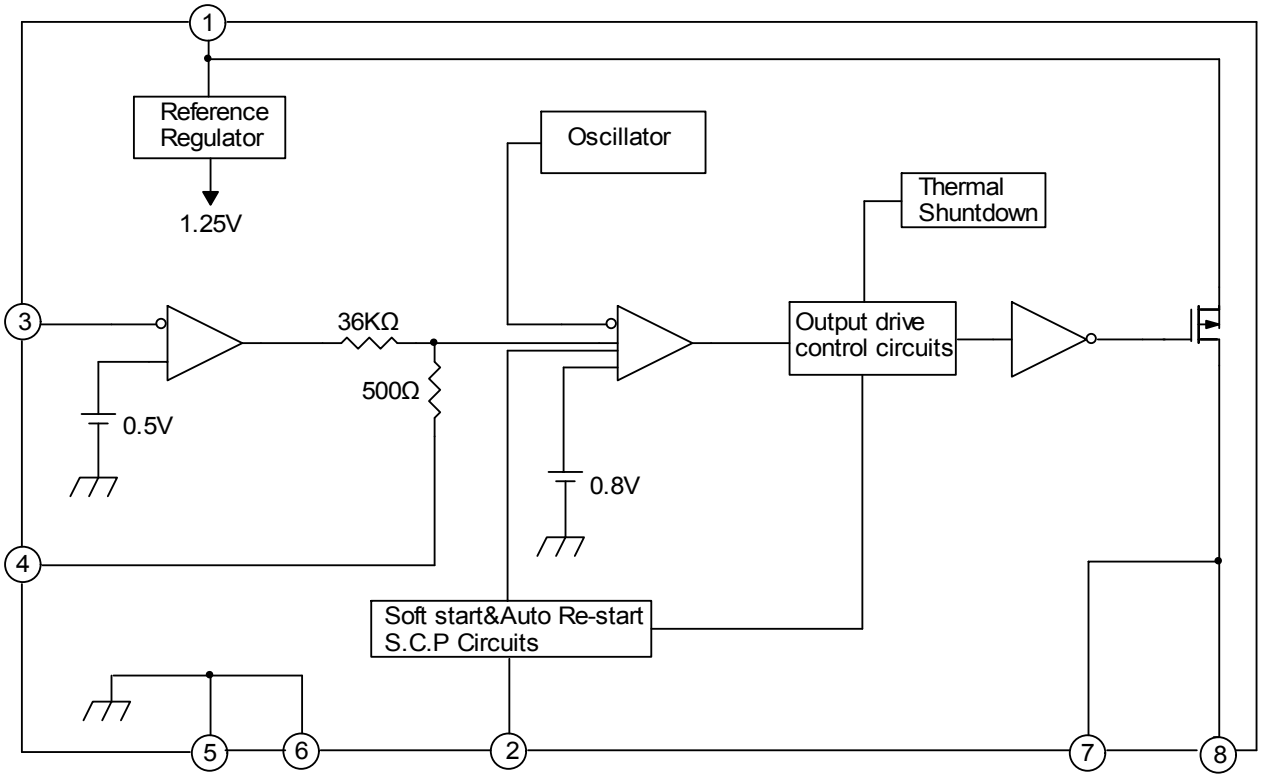

Quad 1-of-2 multiplexer/demultiplexer CBT3257

FEATURES

- 5 Ω switch connection between two ports
- TTL-compatible input levels
- Minimal propagation delay through the switch
- Latch-up protection exceeds 500 mA per JESD78
- ESD protection exceeds 2000 V HBM per JESD22-A114, 200 V MM per JESD22-A115 and 1000 V CDM per JESD22-C101

DESCRIPTION

The CBT3257 is a quad 1-of-2 high-speed TTL-compatible multiplexer/demultiplexer. The low on resistance of the switch allows inputs to be connected to outputs without adding propagation delay or generating additional ground bounce noise.

Output Enable ($\overline{OE}$) and select-control (S) inputs select the appropriate B1 and B2 outputs for the A-input data.

The CBT3257 is characterized for operation from -40 to +85 °C.

PIN CONFIGURATION

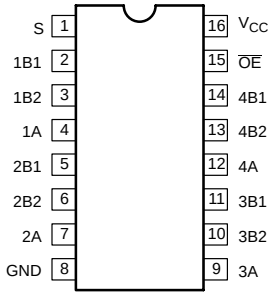

PIN DESCRIPTION

PIN NUMBER	SYMBOL	NAME AND FUNCTION
1	S	Select-control input
2, 3, 5, 6, 10, 11, 13, 14	1B1, 1B2, 2B1, 2B2 3B1, 3B2 4B1, 4B2	B outputs
4, 7, 9, 12	1A, 2A, 3A, 4A	A inputs
8	GND	Ground (0 V)
15	$\overline{OE}$	Output enable
16	V_{CC}	Positive supply voltage

ORDERING INFORMATION

PACKAGES	TEMPERATURE RANGE	ORDER CODE	TOPSIDE MARK	DWG NUMBER
16-pin plastic SO	-40 to 85 °C	CBT3257D	CBT3257D	SOT109-1
16-pin plastic SSOP	-40 to 85 °C	CBT3257DB	CT3257	SOT338-1
16-pin plastic SSOP (QSOP)	-40 to 85 °C	CBT3257DS	CBT3257	SOT519-1
16-pin plastic TSSOP	-40 to 85 °C	CBT3257PW	CBT3257	SOT403-1

Standard packing quantities and other packaging data is available at www.philipslogic.com/packaging.

P-Channel 2.5-V (G-S) MOSFET

PRODUCT SUMMARY		
V_{DS} (V)	$r_{DS(on)}$ (Ω)	I_D (A)[b]
-20	0.100 @ V_{GS} = -4.5 V	-2.4
	0.150 @ V_{GS} = -2.5 V	-2.0

TO-236
(SOT-23)

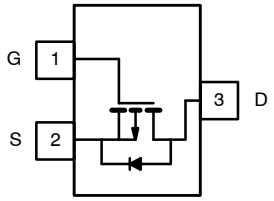

Top View

Si2301 BDS (L1)*

*Marking Code

Ordering Information: Si2301BDS-T1

ABSOLUTE MAXIMUM RATINGS (T_A = 25°C UNLESS OTHERWISE NOTED)					
Parameter		Symbol	5 sec	Steady State	Unit
Drain-Source Voltage		V_{DS}	-20		V
Gate-Source Voltage		V_{GS}	±8		
Continuous Drain Current (T_J = 150°C)[b]	T_A= 25°C	I_D	-2.4	-2.2	A
	T_A= 70°C		-1.9	-1.8	
Pulsed Drain Current[a]		I_{DM}	-10		
Continuous Source Current (Diode Conduction)[b]		I_S	-0.72	-0.6	
Power Dissipation[b]	T_A= 25°C	P_D	0.9	0.7	W
	T_A= 70°C		0.57	0.45	
Operating Junction and Storage Temperature Range		T_J, T_{stg}	-55 to 150		°C

THERMAL RESISTANCE RATINGS				
Parameter	Symbol	Typical	Maximum	Unit
Maximum Junction-to-Ambient[b]	R_{thJA}	120	145	°C/W
Maximum Junction-to-Ambient[c]		140	175	

Notes
a. Pulse width limited by maximum junction temperature.
b. Surface Mounted on FR4 Board, t ≤ 5 sec.
c. Surface Mounted on FR4 Board.

AP1084

5A Low Dropout Positive Adjustable or Fixed-Mode Regulator

■ Features

- 1.4V maximum dropout at full load current
- Built-in thermal shutdown
- Output current limiting
- Adjustable output voltage or fixed 1.5V, 1.8V, 2.5V, 3.3V, 5.0V
- Fast transient response
- Good noise rejection
- Package : TO252, TO263, TO220

■ General Description

AP1084 is a low dropout positive adjustable or fixed-mode regulator with minimum of 5.0A output current capability. The product is specifically designed to provide well-regulated supply for low voltage IC applications such as high-speed bus termination and low current 3.3V logic supply. AP1084 is also well suited for other applications such as VGA cards. AP1084 is guaranteed to have lower than 1.4V dropout at full load current making it ideal to provide well-regulated outputs of 1.25 to 3.3V with 4.7 to 12V input supply.

■ Ordering Information

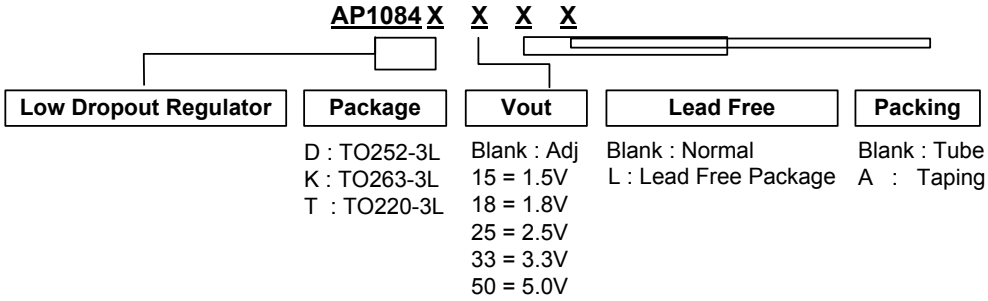

■ Typical Circuit

5.0V to 3.3V Fixed Mode Regulator

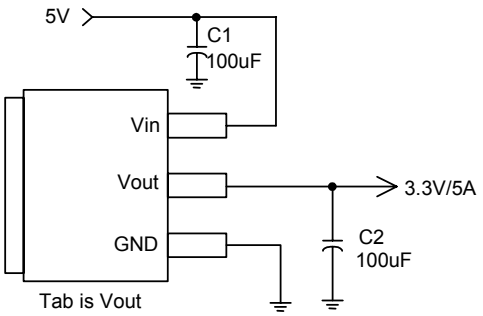

Adjustable Regulator

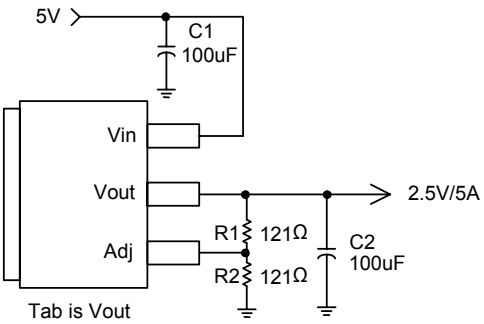

Note: $V_o = V_{REF} * (1 + \frac{R_2}{R_1})$

AP1117

1A Low Dropout Positive Adjustable or Fixed-Mode Regulator

■ Features

- 1.4V maximum dropout at full load current
- Fast transient response
- Output current limiting
- Built-in thermal shutdown
- Packages: SOT223, TO263, TO252, TO220, SOT89
- Good noise rejection
- 3-Terminal Adjustable or Fixed 1.5V, 1.8V, 1.9V, 2.5V, 3.3V, 5.0V

■ Applications

- PC peripheral
- Communication

■ General Description

AP1117 is a low dropout positive adjustable or fixed-mode regulator with minimum of 1A output current capability. The product is specifically designed to provide well-regulated supply for low voltage IC applications such as high-speed bus termination and low current 3.3V logic supply. AP1117 is also well suited for other applications such as VGA cards. AP1117 is guaranteed to have lower than 1.4V dropout at full load current making it ideal to provide well-regulated outputs of 1.25 to 5.0 with 6.4V to 12V input supply.

■ Ordering Information

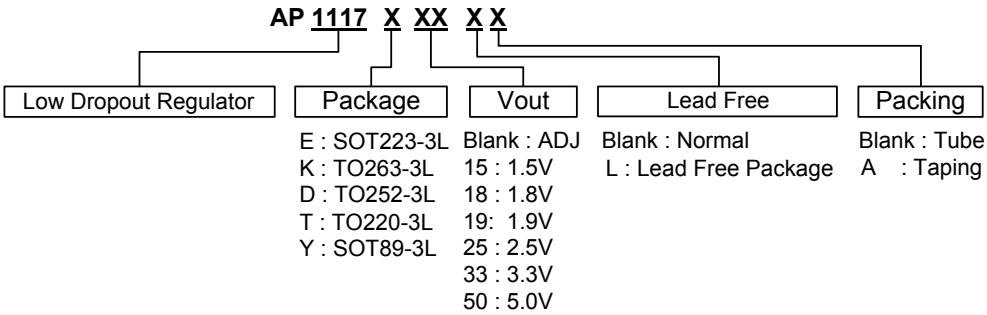

■ Typical Circuit

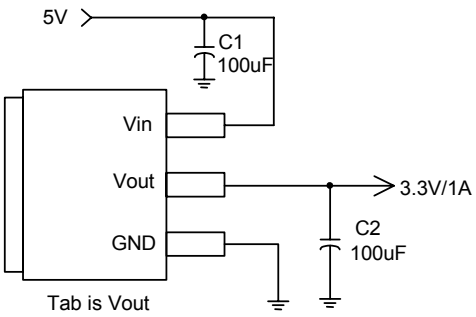

(5V/3.3V fixed output)

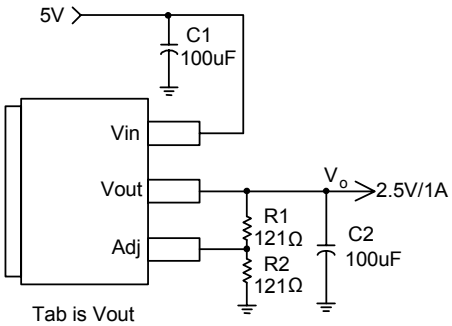

(5V/2.5V ADJ output)

Note: $V_o = V_{REF} * (1 + \frac{R_2}{R_1})$

AP9435M

Advanced Power Electronics Corp.

P-CHANNEL ENHANCEMENT MODE POWER MOSFET

- ▼ **Simple Drive Requirement**
- ▼ **Low On-resistance**
- ▼ **Fast Switching**

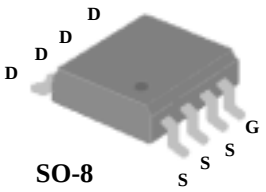

SO-8

BV_{DSS}	-30V
$R_{DS(ON)}$	50mΩ
I_D	-5.3A

Description

The Advanced Power MOSFETs from APEC provide the designer with the best combination of fast switching, ruggedized device design, low on-resistance and cost-effectiveness.

The SO-8 package is universally preferred for all commercial-industrial surface mount applications and suited for low voltage applications such as DC/DC converters.

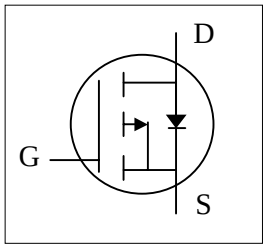

Absolute Maximum Ratings

Symbol	Parameter	Rating	Units
V_{DS}	Drain-Source Voltage	-30	V
V_{GS}	Gate-Source Voltage	± 20	V
I_D@T_A=25℃	Continuous Drain Current[3]	-5.3	A
I_D@T_A=70℃	Continuous Drain Current[3]	-4.7	A
I_{DM}	Pulsed Drain Current[1]	-20	A
P_D@T_A=25℃	Total Power Dissipation	2.5	W
	Linear Derating Factor	0.02	W/℃
T_{STG}	Storage Temperature Range	-55 to 150	℃
T_J	Operating Junction Temperature Range	-55 to 150	℃

Thermal Data

Symbol	Parameter		Value	Unit
Rthj-amb	Thermal Resistance Junction-ambient[3]	Max.	50	℃/W

FAIRCHILD SEMICONDUCTOR™

November 1995

2N7000 / 2N7002 / NDS7002A
N-Channel Enhancement Mode Field Effect Transistor

General Description

These N-Channel enhancement mode field effect transistors are produced using Fairchild's proprietary, high cell density, DMOS technology. These products have been designed to minimize on-state resistance while provide rugged, reliable, and fast switching performance. They can be used in most applications requiring up to 400mA DC and can deliver pulsed currents up to 2A. These products are particularly suited for low voltage, low current applications such as small servo motor control, power MOSFET gate drivers, and other switching applications.

Features

- High density cell design for low $R_{DS(ON)}$.
- Voltage controlled small signal switch.
- Rugged and reliable.
- High saturation current capability.

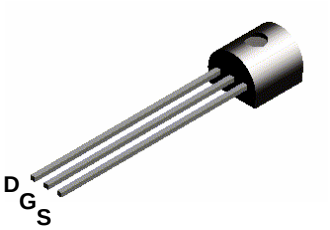

TO-92
2N7000

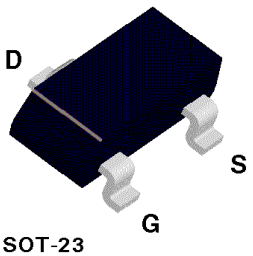

SOT-23
(TO-236AB)
2N7002/NDS7002A

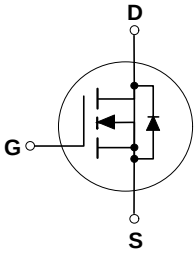

Absolute Maximum Ratings

T_A = 25°C unless otherwise noted

Symbol	Parameter	2N7000	2N7002	NDS7002A	Units
V_{DSS}	Drain-Source Voltage	60			V
V_{DGR}	Drain-Gate Voltage (R_{GS} ≤ 1 MΩ)	60			V
V_{GSS}	Gate-Source Voltage - Continuous	±20			V
	- Non Repetitive (tp < 50µs)	±40			
I_D	Maximum Drain Current - Continuous	200	115	280	mA
	- Pulsed	500	800	1500	
P_D	Maximum Power Dissipation	400	200	300	mW
	Derated above 25°C	3.2	1.6	2.4	mW/°C
T_J,T_{STG}	Operating and Storage Temperature Range	-55 to 150		-65 to 150	°C
T_L	Maximum Lead Temperature for Soldering Purposes, 1/16" from Case for 10 Seconds	300			°C
THERMAL CHARACTERISTICS					
$R_{\theta JA}$	Thermal Resistance, Junction-to-Ambient	312.5	625	417	°C/W

2 × 6 W stereo power amplifier TDA1517; TDA1517P

FEATURES

- Requires very few external components
- High output power
- Fixed gain
- Good ripple rejection
- Mute/standby switch
- AC and DC short-circuit safe to ground and V_P
- Thermally protected
- Reverse polarity safe
- Capability to handle high energy on outputs (V_P = 0 V)
- No switch-on/switch-off plop
- Electrostatic discharge protection.

GENERAL DESCRIPTION

The TDA1517 is an integrated class-B dual output amplifier in a plastic single in-line medium power package with fin (SIL9MPF) and a plastic heat-dissipating dual in-line package (HDIP18). The device is primarily developed for multi-media applications.

QUICK REFERENCE DATA

SYMBOL	PARAMETER	CONDITIONS	MIN.	TYP.	MAX.	UNIT
V_P	supply voltage		6.0	14.4	18.0	V
I_{ORM}	repetitive peak output current		–	–	2.5	A
$I_{q(tot)}$	total quiescent current		–	40	80	mA
I_{sb}	standby current		–	0.1	100	μA
I_{sw}	switch-on current		–	–	40	μA
$\|Z_I\|$	input impedance		50	–	–	kΩ
P_o	output power	R_L = 4 Ω; THD = 0.5%	–	5	–	W
		R_L = 4 Ω; THD = 10%	–	6	–	W
SVRR	supply voltage ripple rejection	f_i = 100 Hz to 10 kHz	48	–	–	dB
α_{cs}	channel separation		40	–	–	dB
G_v	closed loop voltage gain		19	20	21	dB
$V_{no(rms)}$	noise output voltage (RMS value)		–	50	–	μV
T_c	crystal temperature		–	–	150	°C

ORDERING INFORMATION

TYPE NUMBER	PACKAGE		
	NAME	DESCRIPTION	VERSION
TDA1517	SIL9MPF	plastic single in-line medium power package with fin; 9 leads	SOT110-1
TDA1517P	HDIP18	plastic heat-dissipating dual in-line package; 18 leads	SOT398-1

PINNING

SYMBOL	PIN	DESCRIPTION
–INV1	1	non-inverting input 1
SGND	2	signal ground
SVRR	3	supply voltage ripple rejection output
OUT1	4	output 1
PGND	5	power ground
OUT2	6	output 2
V_P	7	supply voltage
M/SS	8	mute/standby switch input
–INV2	9	non-inverting input 2

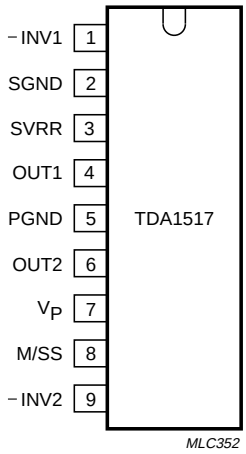

Fig.2 Pin configuration for SOT110-1.

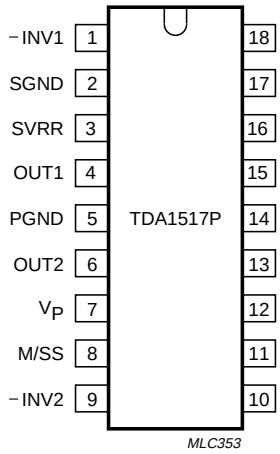

Pins 10 to 18 should be connected to GND or floating.

Fig.3 Pin configuration for SOT398-1.

FUNCTIONAL DESCRIPTION

The TDA1517 contains two identical amplifiers with differential input stages. The gain of each amplifier is fixed at 20 dB. A special feature of the device is the mute/standby switch which has the following features:

- Low standby current (<100 μA)
- Low mute/standby switching current (low cost supply switch)
- Mute condition.

FEATURES

- Low voltage and low power operations:
  - FT24C02/04/08/16: V_{CC} = 2.5V to 5.5V
  - FT24C02A/04A/08A/16A: V_{CC} = 1.8V to 5.5V
- Maximum Standby current < 1µA (typically 0.02µA and 0.06µA @ 1.8V and 5.5V respectively).
- 16 bytes page write mode.
- Partial page write operation allowed.
- Internally organized: 256 × 8 (2K), 512 × 8 (4K), 1024 × 8 (8K), 2048 × 8 (16K).
- Standard 2-wire bi-directional serial interface.
- Schmitt trigger, filtered inputs for noise protection.
- Self-timed programming cycle (5ms maximum).
- Automatic erase before write operation.
- Write protect pin for hardware data protection.
- High reliability: typically 800,000 cycles endurance.
- 100 years data retention.
- Industrial temperature range (-40° C to 85° C).
- Standard 8-pin PDIP/SOIC/TSSOP Pb-free packages.

and

DESCRIPTION

The FT24C02/04/08/16 series are 2048/4096/8192/16384 bits of serial Electrical Erasable and Programmable Read Only Memory, commonly known as EEPROM. They are organized as 256/512/1024/2048 words of 8 bits (1 byte) each. The devices are fabricated with proprietary advanced CMOS process for low power and low voltage applications. These devices are available in standard 8-lead PDIP, 8-lead JEDEC SOIC and 8-lead TSSOP packages. A standard 2-wire serial interface is used to address all read and write functions. Our extended V_{CC} range (1.8V to 5.5V) devices enables wide spectrum of applications.

PIN CONFIGURATION

Pin Name	Pin Function
A2, A1, A0	Device Address Inputs
SDA	Serial Data Input / Open Drain Output
SCL	Serial Clock Input
WP	Write Protect
NC	No-Connect

All three packaging types come in conventional or Pb-free certified.

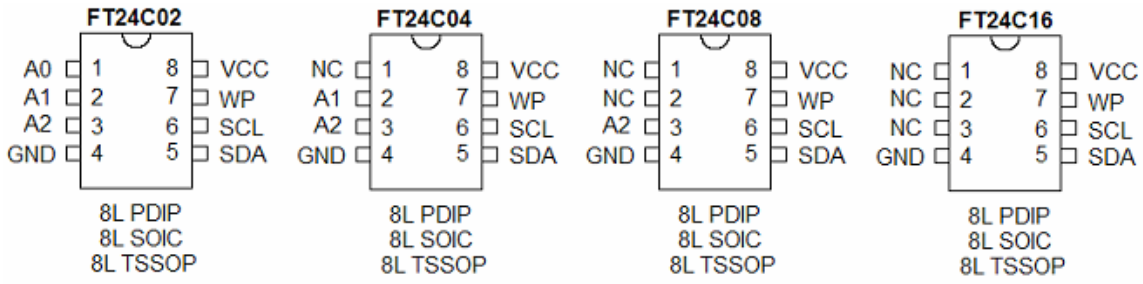

DESCRIPTION

The HY5DU281622FT(P) is a 134,217,728-bit CMOS Double Data Rate(DDR) Synchronous DRAM, ideally suited for the main memory applications which requires large memory density and high bandwidth.

This Hynix 128Mb DDR SDRAMs offer fully synchronous operations referenced to both rising and falling edges of the clock. While all addresses and control inputs are latched on the rising edges of the CK (falling edges of the /CK), Data, Data strobes and Write data masks inputs are sampled on both rising and falling edges of it. The data paths are internally pipelined and 2-bit prefetched to achieve very high bandwidth. All input and output voltage levels are compatible with SSTL_2.

FEATURES

- V_{DD}, V_{DDQ} = 2.3V *min* ~ 2.7V *max*
  (Typical 2.5V Operation +/- 0.2V for DDR266, 333)
- V_{DD}, V_{DDQ} = 2.4V *min* ~ 2.7V *max*
  (Typical 2.6V Operation +0.1/- 0.2V for DDR400 and 400Mbps/pin product)
- All inputs and outputs are compatible with SSTL_2 interface
- Fully differential clock inputs (CK, /CK) operation
- Double data rate interface
- Source synchronous - data transaction aligned to bidirectional data strobe (DQS)
- x16 device has two bytewide data strobes (UDQS, LDQS) per each x8 I/O
- Data outputs on DQS edges when read (edged DQ) Data inputs on DQS centers when write (centered DQ)
- On chip DLL align DQ and DQS transition with CK transition
- DM mask write data-in at the both rising and falling edges of the data strobe
- All addresses and control inputs except data, data strobes and data masks latched on the rising edges of the clock
- Programmable CAS latency 2/2.5 (DDR266, 333) and 3 (DDR400 and 400Mbps/pin product) supported
- Programmable burst length 2/4/8 with both sequential and interleave mode
- Internal four bank operations with single pulsed /RAS
- Auto refresh and self refresh supported
- t_{RAS} lock out function supported
- 4096 refresh cycles/64ms
- JEDEC standard 400mil 66pin TSOP-II with 0.65mm pin pitch
- Lead free (*ROHS Compliant)

ORDERING INFORMATION

Part No.	Configuration	Package
HY5DU281622F(L)TP-X*	8Mx16	400mil 66pin TSOP-II**

* X means speed grade
** Lead-free product
*ROHS (Restriction Of Hazardous Substances)

OPERATING FREQUENCY

Grade	Clock Rate		Remark
-5	200MHz@CL3		400Mbps/pin (maximum Date rate)
-D43	200MHz@CL3		DDR400B (3-3-3)
-D4	200MHz@CL3		DDR400 (3-4-4)
- J	133MHz@CL2	166MHz @CL2.5 & @CL3	DDR333 (2.5-3-3) DDR333 (3-3-3)
- K	133MHz@CL2	133MHz@CL2.5	DDR266A (2-3-3)
- H	100MHz@CL2	133MHz@CL2.5	DDR266B (2.5-3-3)

PIN CONFIGURATION

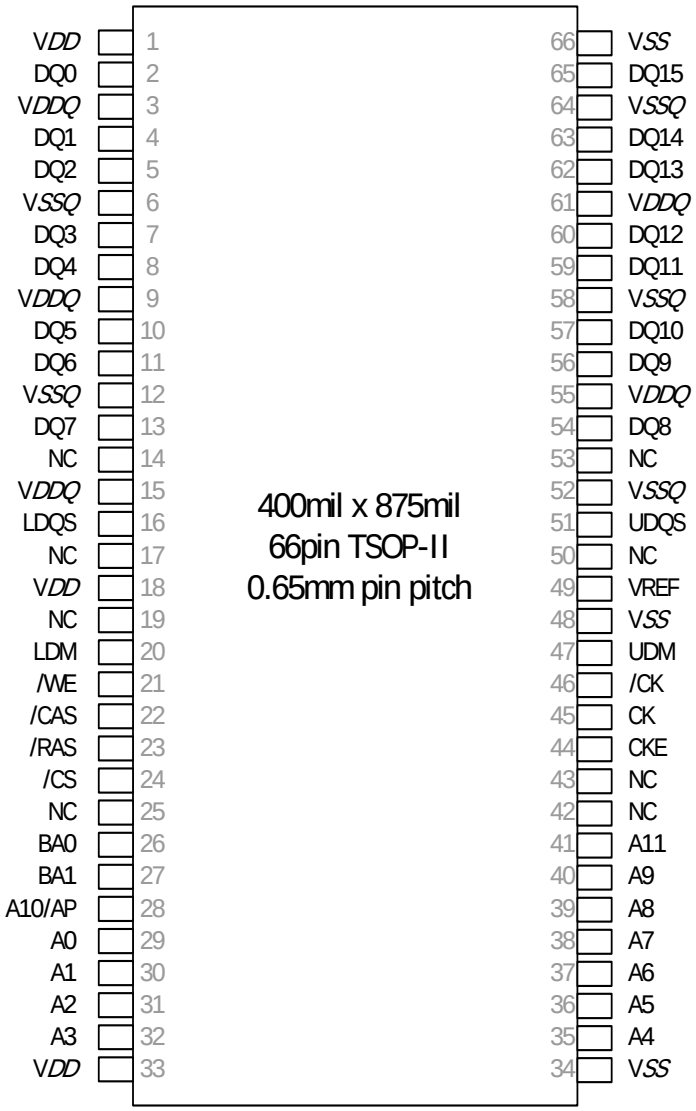

ROW AND COLUMN ADDRESS INFORMATION

- Organization : 2M x 16 x 4banks
- Row Address : A0 - A11
- Column Address : A0 - A8
- Bank Address : BA0, BA1
- Auto Precharge Flag : A10
- Refresh : 4K

TNDT1A1200F
TNDT1A2200F

FOR DIGITAL TERRESTRIAL RECEPTION

CUSTOMER APPROVAL

A	Original Release		
REV	DESCRIPTION	DATE	SIGN

DESCRIPTION	APPROVAL	CHECK	DESIGN
EUROPEAN DIGITAL TERRESTRIAL STANDARD	DATE	DATE	DATE 2008-10-16
DRAWING NO			
REVISIONS / PAGES TOTAL 17			
1.0			

NO	SPECIFICATION
1	**FEATURES** 1. +5V supply voltage only; no external tuning voltage required. 2. Tuners for horizontal and vertical mounting available. 3. Option with DC-power output through input connector (e. g. indoor antenna supply) 4. Tuners comply with relevant CENELEC standards with regard to requirements concerning signal handling capability and immunity 5. Superior low noise and high sensitivity performance 6. RF-in to RF-out loopthrough amplifiers 7. low noise and excellent linearity 8. VHF high to UHF frequency range coverage 9. Standard connectors for in-and output e. g. IEC, F-connector. RCA 10. full UHF /VHF-H frequency coverage 11. Pattem generator included 12. I^2C programmable 13. 400KHz Bus compliant 14. Stand-by mode addressable 15. High performance and cost effective single conversion tuner 16. I^2C programmable 17. 400KHz Bus compliant 18. Fast PLL tuning speed (programmable step size e.g.62.5KHz and 166.67KHz) 19. Flat overall frequency response 20. High PLL loop bandwidth which ensures very low oscillator phase noise 21. SAW-filter and IF-amplifier included a) Switchable 7/8 MHz SAW filter (full band tuners) b) Fixed 8 MHz SAW filter (UHF only tuners) c) IF-amplification controllable over a wide range 22. Differential, filtered (SAW)‘digital’ IF-output to directly drive the channel decoder

Dual 4-channel analog multiplexer, demultiplexer

74HC4052; 74HCT4052

FEATURES

- Wide analog input voltage range from –5 V to +5 V
- Low ON-resistance:
  - 80 Ω (typical) at $V_{CC} – V_{EE}$ = 4.5 V
  - 70 Ω (typical) at $V_{CC} – V_{EE}$ = 6.0 V
  - 60 Ω (typical) at $V_{CC} – V_{EE}$ = 9.0 V
- Logic level translation: to enable 5 V logic to communicate with ±5 V analog signals
- Typical “break before make” built in
- Complies with JEDEC standard no. 7A
- ESD protection:
  - HBM EIA/JESD22-A114-B exceeds 2000 V
  - MM EIA/JESD22-A115-A exceeds 200 V.
- Specified from –40 °C to +85 °C and –40 °C to +125 °C.

APPLICATIONS

- Analog multiplexing and demultiplexing
- Digital multiplexing and demultiplexing
- Signal gating.

DESCRIPTION

The 74HC4052 and 74HCT4052 are high-speed Si-gate CMOS devices and are pin compatible with the HEF4052B. They are specified in compliance with JEDEC standard no. 7A.

The 74HC4052 and 74HCT4052 are dual 4-channel analog multiplexers or demultiplexers with common select logic. Each multiplexer has four independent inputs/outputs (pins nY0 to nY3) and a common input/output (pin nZ). The common channel select logics include two digital select inputs (pins S0 and S1) and an active LOW enable input (pin $\overline{E}$). When pin $\overline{E}$ = LOW, one of the four switches is selected (low-impedance ON-state) with pins S0 and S1. When pin $\overline{E}$ = HIGH, all switches are in the high-impedance OFF-state, independent of pins S0 and S1.

V_{CC} and GND are the supply voltage pins for the digital control inputs (pins S0, S1, and $\overline{E}$). The V_{CC} to GND ranges are 2.0 V to 10.0 V for 74HC4052 and 4.5 V to 5.5 V for 74HCT4052. The analog inputs/outputs (pins nY0 to nY3 and nZ) can swing between V_{CC} as a positive limit and V_{EE} as a negative limit. $V_{CC} – V_{EE}$ may not exceed 10.0 V.

For operation as a digital multiplexer/demultiplexer, V_{EE} is connected to GND (typically ground).

FUNCTION TABLE

INPUT[1]			CHANNEL BETWEEN
$\overline{E}$	S1	S0	
L	L	L	nY0 and nZ
L	L	H	nY1 and nZ
L	H	L	nY2 and nZ
L	H	H	nY3 and nZ
H	X	X	none

Note

1. H = HIGH voltage level
   L = LOW voltage level
   X = don’t care.

HIGHLY INTEGRATED LCD TV PROCESSOR

1.GENERAL DESCRIPTION

The SPV7100A is a highly integrated solution for the mainstream LCD TV applications. The SPV7100A provides on-chip functions including a high-speed triple-ADC and PLL, HDMI **PanelLink**™ Cinema receiver, TV decoder with 3-D comb filter, 4-pair Audio Line-In, 2-pair Audio Line-Out, one SIF demodulator and audio decoder, 3D motion adaptive de-interlacing, 2:2/3:2 film mode detection, video on graphic PIP/POP, SDRAM/DDR controller, color management control, sRGB color management, bitmap-based and font-based OSD engine, embedded CPU and a dual channels LVDS transmitter. The chip could support LCD TV up to 1080P input resolution and 1080p output resolution.

Note: PanelLink is the Trade Mark of Silicon Image Inc.

2. FEATURES

2.1. Graphics and Video Input Port

- Integrate 150MHz 10-bit ADC/PLL
- Dual CCIR656 digital video ports to support 2 input or 1 input/1 output
- Support SDTV at 480i/576i and 480p/576p
- Support HDTV at 720p and 1080i and1080p
- Support PC graphics VGA, SVGA, XGA, WXGA, SXGA@75Hz (135MHz)
- Build-in sync. processor for separate, composite or sync on Y/G
- Support Video/Graphics PIP/DW
- Channel swap for any source input
- Image Format Detection/Auto Image Positioning/Auto Phase Detection
- Full SCART support including RGB fast blank

2.2. HDMI

- HDMI 1.2 compliant and DVI 1.0 compliant receiver
- HDCP 1.1 compliant receiver
- Support DTV resolutions (480i/576i/480p/576p/720p/1080i/1080p)
- S/PDIF output supports PCM, Dolby Digital, DTS digital audio with bypass mode
- Four I2S audio outputs to SSD(Stereo Sound Decoder) with bypass mode
- Auto audio error detection with programmable soft mute
- Build-in OTP for HDCP key

2.3. 3D Video Decoder

- NTSC/PAL/SECAM video decoder
- 3D comb filter for NTSC, PAL I (B,G,H,D,N), PAL-M, PAL-N
- Enhanced NTSC/PAL/SECAM auto detection
- 4 analog inputs and one analog video output
- Cross-color reduction for NTSC by 3-line comb filtering
- Cross-color reduction for PAL by 5-line comb filtering
- Motion adaptive 3D Y/C separation comb filter for NTSC/PAL system
- Multi-standard VBI data decoder, Teletext 2.5, WSS, VPS, Closed-caption and V-chip
- Macrovision detection
- VBI data (C.C, TTX2.5, V-chip) overlay display

2.4. High Quality Video Processing

- Enhanced Pixel-based 3D motion adaptive de-interlacing (SDTV/HDTV)
- Enhanced 2:2/3:2 film mode detection
- Support Graphics mode frame rate conversion
- Support Video mode frame rate conversion
- 2D Edge enhancement
- Dynamic Peaking Filter
- Enhanced Digital Luminance Transient Improvement (DLTI)
- Digital Color Transient Improvement (DCTI)
- Black/White Level Expansion and Dynamic Contrast
- RGBYMC color adjustment
- Dark and Gray area UV Suppression
- Enhanced 3D motion adaptive noise reduction
- De-blocking and de-mosquito filters
- Color management/Color temperature adjustment
- Brightness/Contrast/hue/Saturation adjustment
- Support sRGB color correction
- Build-in three 256-point gamma tables with 10 bits resolution
- Color space conversion, both YCbCr to RGB and RGB to YCbCr
- Build-in temporal/spatial color dithering
- 10-bit video/image processing

2.5. High Quality Video Scaling Engine

- Advanced third-generation scaling engine
- Support 4:3 / 16:9 with non-linear scaling
- Support Moiré Canceling

2.6. Multi-standard TV Sound Decoder

- Field proven TV sound decoder
- Support BTSC, A2/Zweiton, NICAM, EIAJ, SECAM, FM stereo
- Automatic TV-standard detection (ASD)
- Non-standard carrier compatible
- SAP decoding where applicable
- Auto fallback from NICAM where applicable

2.7. Embedded OSD and VBI Controller

- Build-in programmable OSD engine for two OSD windows (bit map OSD)
- 1,2,4 and 8-bit per pixel (bit-map OSD)
- Support hardware cursor
- Support programmable 512 font-based OSD and graphics-based OSD
- Support VBI decoder (CC,V-Chip and Teletext)
- Support VBI CC/TTX/Menu with more than 1000 char-fonts

2.8. Embedded DDR/SDRAM Controller

- Integrated DDR/SDRAM controller with DLL (DDR)
- Support 32-bit DRAM bus with memory size from 16Mb (limited functions) to 256Mb

2.9. Programmable Digital Output for LCD

- Support output sequence mapping for TI and Thine
- Build-in dual channels 8-bit LVDS Tx or single channel 10-bit LVDS Tx
- Support display output up to 1920x1200 @60Hz (165Mhz WUXGA reduced blanking)
- Support Power Down Sequence
- 4-ch PWM backlight intensity control

2.10. CPU

- Powerful 32-bit RISC CPU
- Simple memory management stub (SMMU)
- MIPS-I instruction with DSP instruction set extension
- 2K bytes 2-way instruction cache
- 4K bytes direct-mapped data cache
- 8K bytes data memory for DMA operation
- EJTAG interface
- One UART up to 115200 baud rate
- Four 24-bit up/down timers
- 3K Bytes IMem for power saving mode

2.11. Audio Processor

- Support SPDIF input
- Support SPDIF output (signal could come from SPDIF input or SSD)
- Support up to 8 channels I2S I/O
- 4 channels audio DAC output
- 4 channels audio ADC input
- Channel: L, R, C, S, Sub, Aux1, 2 and 3 @ 32 kHz
- 5- band Equalizer
- 3-D surround sound
- Bass management
- Volume control
- Support sub-woofer output
- Sample rate conversion
- SSD could output up to 3 sources
- Virtual Dolby Surround (VDSII 422 and 423) (support by SPV7100AxD)
- SRS TruSurround (XT, WOW, 3D Sound) (support by SPV7100 AxS)

2.12. Misc

- Build-in TV remote control 1 infra-red receiver interface
- 2-channels 6-bits ADC for key scan function
- Build-in pattern generator for auto testing
- 256-pin LQFP for LCD application

4.3. List of Packages and Pins

4.3.1. 256- LQFP Package

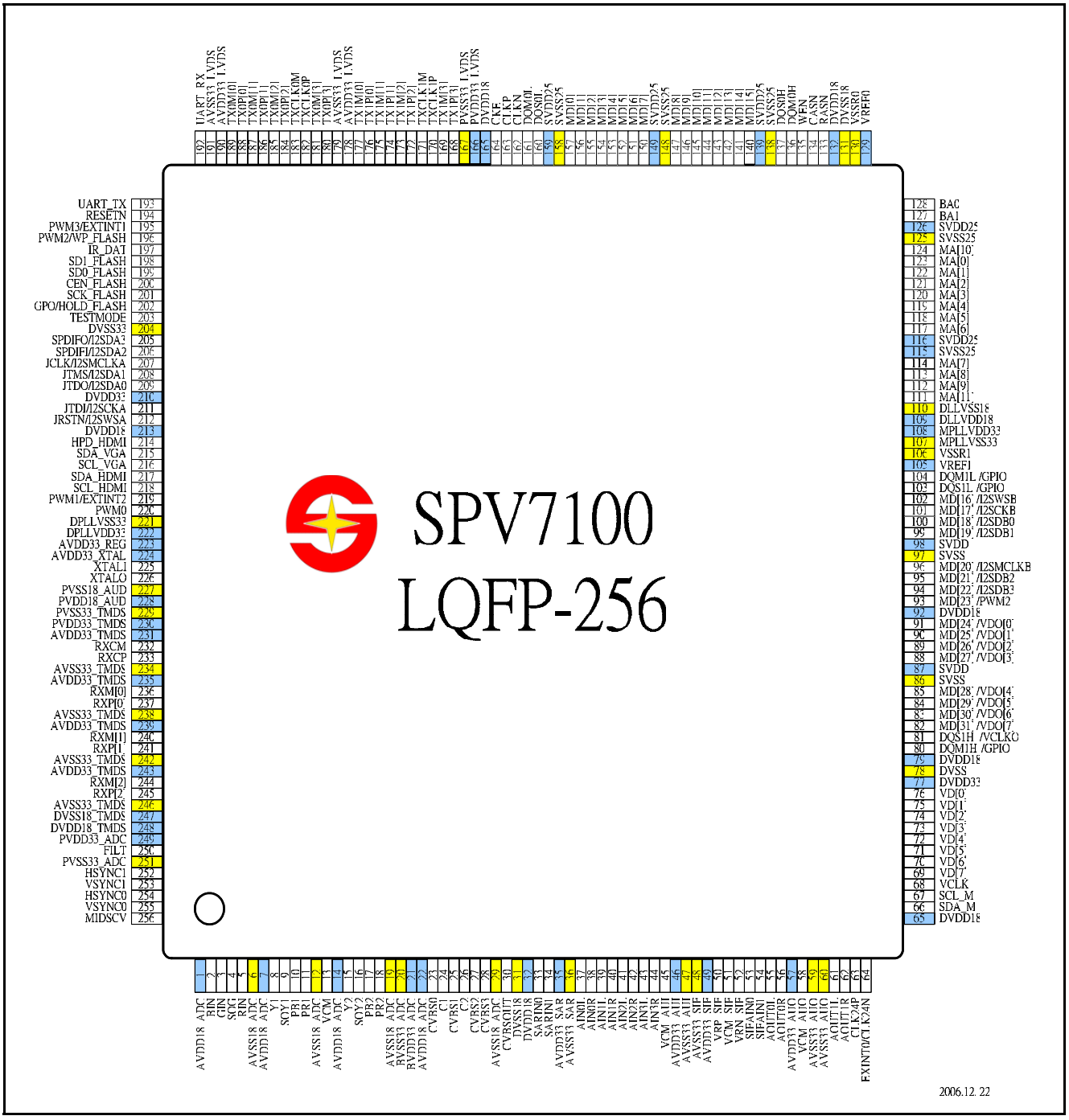

Figure 4-1 SPV7100A Pin Configuration

5 Function

5-1 General Description

MediaTek MT1389L is a cost-effective DVD system-on-chip (SOC) which incorporates advanced features like MPEG-4 video decoder, high quality TV encoder and state-of-art de-interlace processing. The MT1389L enables consumer electronics manufacturers to build high quality, USB2.0, MS/SD/MMC reader, feature-rich DVD players, portable DVD players or any other home entertainment audio/video devices.

World-Leading Technology: Based on MediaTek's world-leading DVD player SOC architecture, the MT1389L is the New generation of the DVD player SOC. It integrates the MediaTek 3rd generation front-end digital RF amplifier and the Servo/MPEG AV decoder.

Rich Feature for High Valued Product: To enrich the feature of DVD player, the MT1389 equips a simplified MPEG-4 advanced simple profile (ASP) video decoder to fully support the DivX[1] Home Theater profile. It makes the MT1389-based DVD player be capable of playback MPEG-4 content which become more and more popular.

Incredible Audio/Video Quality: The progressive scan of the MT1389L utilized advanced motion-adaptive de-interlace algorithm to achieve the best movie/video playback. It also supports a 3:2 pull down algorithm to give the best film effect. The 108MHz/12-bit video DAC provides users a whole new viewing experience. Built-in 6ch audio DACs and 2ch audio ADCs could give the variable function solutions.

High Performance Memory Storage Device: As the core of Portable DVD players need more capability to support current multimedia contents. The MT1389L provides the interface for the 3-in-1 card reader, which supports Memory-Stick, Secure Digital Memory Card, and MultiMediaCard, to connect with the mainstream digital camera FLASH cards. For the USB application, we adopt **USB2.0 High speed** specification to reach rich-contents transference. **USB 2.0 High speed** will support for high-speed devices. **USB 2.0 High Speed** is suitable for high-performance devices such as high-density storage devices. In addition, **USB 2.0 High Speed** supports old USB 1.0/1.1 software and peripherals, offering impressive and even better compatibility to customers

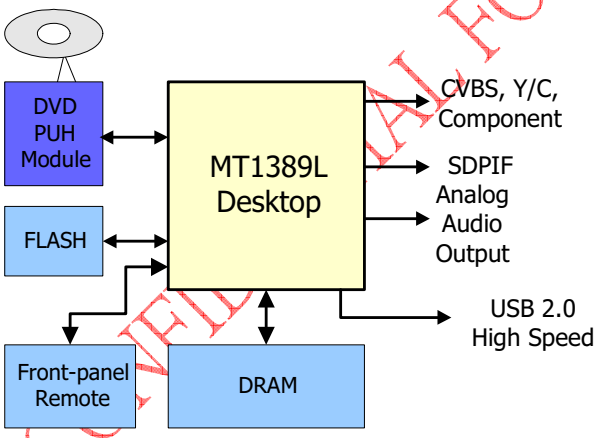

DVD Player System Diagram Using MT1389L

Key Features

- RF/Servo/MPEG Integration
- DivX Home Theater Level MPEG4 ASP Video decoder
- Support Nero-Digital
- Support DivX Ultra
- High Performance Audio Processor
- Progressive Scan
- 108MHz/12-bit, 4 CH TV Encoder
- Internal 6CH Audio DAC
- Internal 2CH Audio ADC
- USB2.0 High Speed (Host/Device)
- 3-in-1 MS/SD/MMC reader

Applications

Standard DVD Players

[1] DivX is a trademark of DivXNetworks
[2] **USB High Speed** : 480Mbit/sec. USB Full Speed : 12Mbit/sec.

6 Pin Assignment

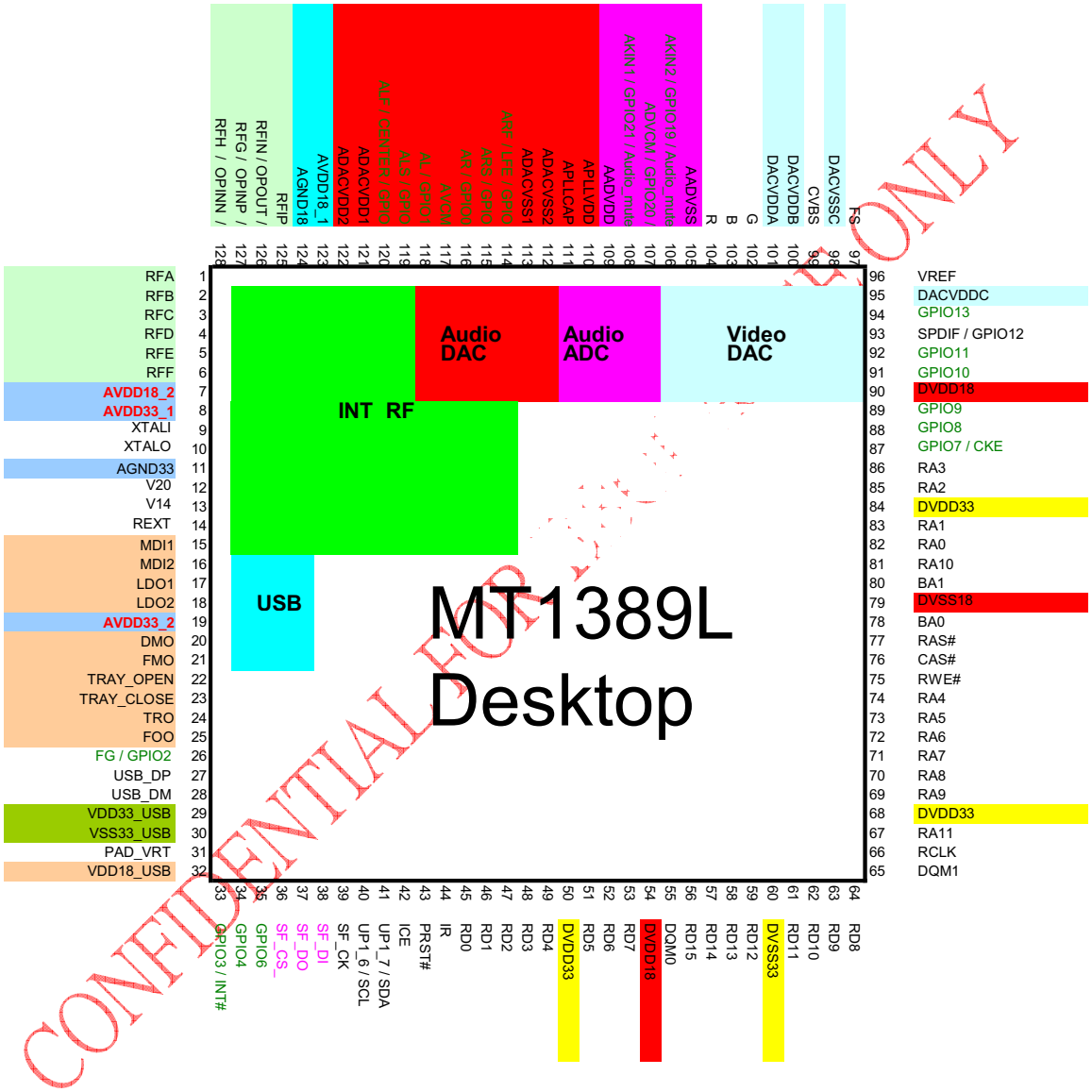

EN25B16
16 Mbit Serial Flash Memory with Boot and Parameter Sectors

FEATURES

- Single power supply operation
- Full voltage range: 2.7-3.6 volt

- 16 M-bit Serial Flash
- 16 M-bit/2048 K-byte/8192 pages
- 256 bytes per programmable page

- High performance
- 75MHz clock rate

- Low power consumption
- 5 mA typical active current
- 1 μA typical power down current

- Flexible Sector Architecture:
- Two 4-Kbyte, one 8-Kbyte, one 16-Kbyte,one 32-Kbyte, and thirty one 64-Kbyte sectors

- Software and Hardware Write Protection:
- Write Protect all or portion of memory via software
- Enable/Disable protection with WP# pin

- High performance program/erase speed
- Byte program time: 7μs typical
- Page program time: 1.5ms typical
- Sector erase time: 300 to 800ms typical
- Chip erase time: 18 Seconds typical

- Minimum 100K endurance cycle

- Package Options
- 8 pins SOP 200mil body width
- 8 contact VDFN
- 16 pin SOP 300mil body width
- All Pb-free packages are RoHS compliant

- Commercial and industrial temperature Range

GENERAL DESCRIPTION

The EN25B16 is a 16M-bit (2048K-byte) Serial Flash memory, with advanced write protection mechanisms, accessed by a high speed SPI-compatible bus. The memory can be programmed 1 to 256 bytes at a time, using the Page Program instruction.

The EN25B16 has thirty six sectors including thirty one sectors of 64KB, one sector of 32KB, one sector of 16KB, one sector of 8KB and two sectors of 4KB. This device is designed to allow either single Sector at a time or full chip erase operation. The EN25B16 can protect boot code stored in the small sectors for either bottom or top boot configurations. The device can sustain a minimum of 100K program/erase cycles on each sector.

Figure.1 CONNECTION DIAGRAMS

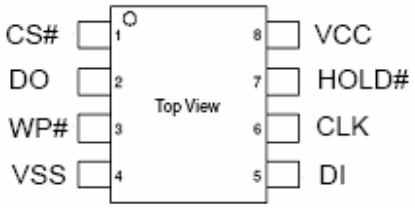

8 - LEAD SOP

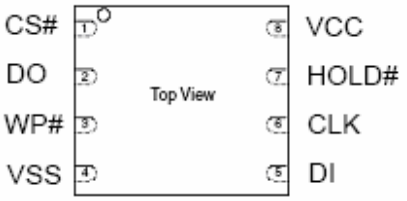

8 - CONTACT VDFN

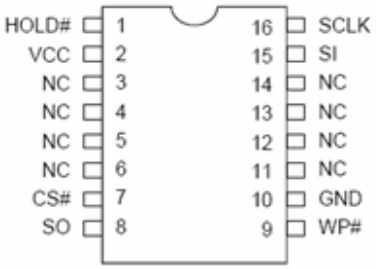

16 - LEAD SOP

Figure 2. BLOCK DIAGRAM

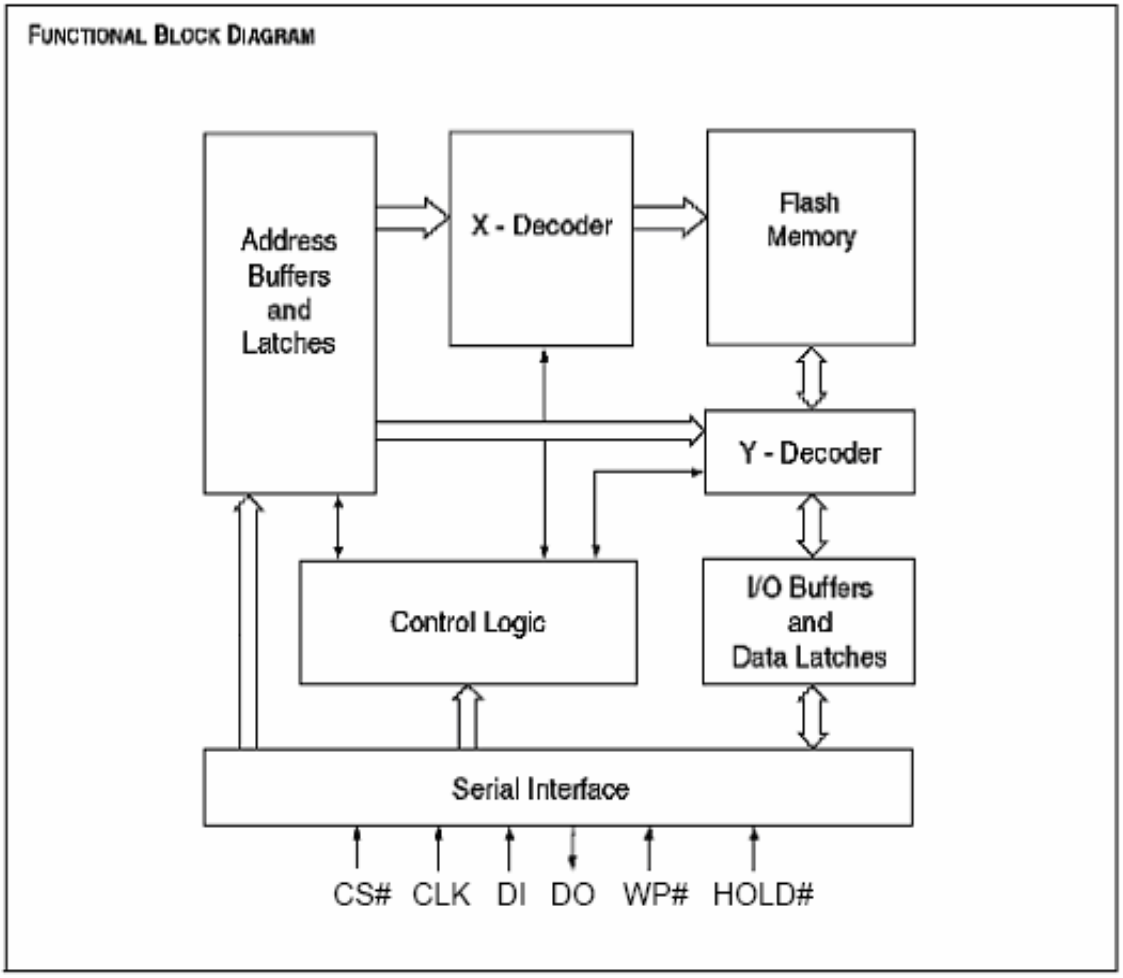

4M x 4Bit x 4 / 2M x 8Bit x 4 / 1M x 16Bit x 4 Banks SDRAM

FEATURES

- JEDEC standard 3.3V power supply
- LVTTL compatible with multiplexed address
- Four banks operation
- MRS cycle with address key programs
  - -. CAS latency (2 & 3)
  - -. Burst length (1, 2, 4, 8 & Full page)
  - -. Burst type (Sequential & Interleave)
- All inputs are sampled at the positive going edge of the system clock
- Burst read single-bit write operation
- DQM (x4,x8) & L(U)DQM (x16) for masking
- Auto & self refresh
- 64ms refresh period (4K cycle)

GENERAL DESCRIPTION

The K4S640432H / K4S640832H / K4S641632H is 67,108,864 bits synchronous high data rate Dynamic RAM organized as 4 x 4,194,304 words by 4 bits, / 4 x 2,097,152 words by 8 bits, / 4 x 1,048,576 words by 16 bits, fabricated with SAMSUNG's high performance CMOS technology. Synchronous design allows precise cycle control with the use of system clock I/O transactions are possible on every clock cycle. Range of operating frequencies, programmable burst length and programmable latencies allow the same device to be useful for a variety of high bandwidth, high performance memory system applications.

Ordering Information

Part No.	Orgainization	Max Freq.	Interface	Package
K4S640432H-TC(L)75	16Mb x 4	133MHz(CL=3)	LVTTL	54pin TSOP(II)
K4S640832H-TC(L)75	8Mb x 8	133MHz(CL=3)		
K4S641632H-TC(L)60	4Mb x 16	166MHz(CL=3)		
K4S641632H-TC(L)70		143MHz(CL=3)		
K4S641632H-TC(L)75		133MHz(CL=3)		

Organization	Row Address	Column Address
16Mx4	A0~A11	A0-A9
8Mx8	A0~A11	A0-A8
4Mx16	A0~A11	A0-A7

Row & Column address configuration

Package Physical Dimension

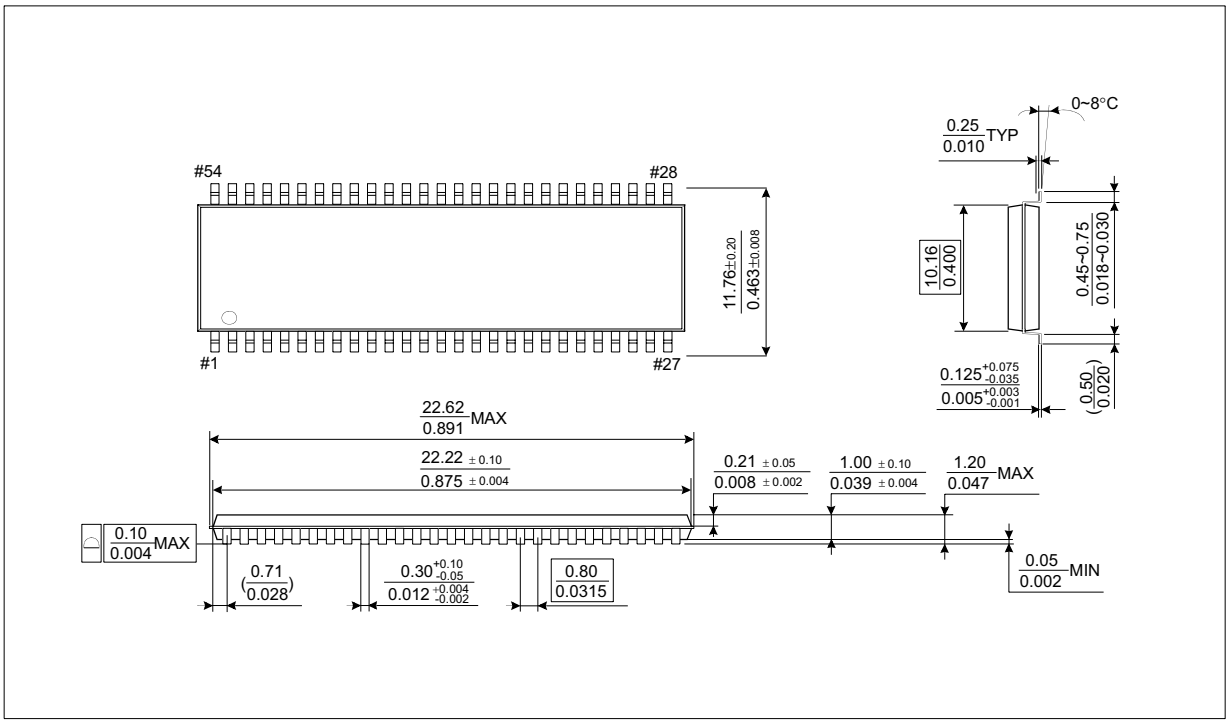

54Pin TSOP(II) Package Dimension

FUNCTIONAL BLOCK DIAGRAM

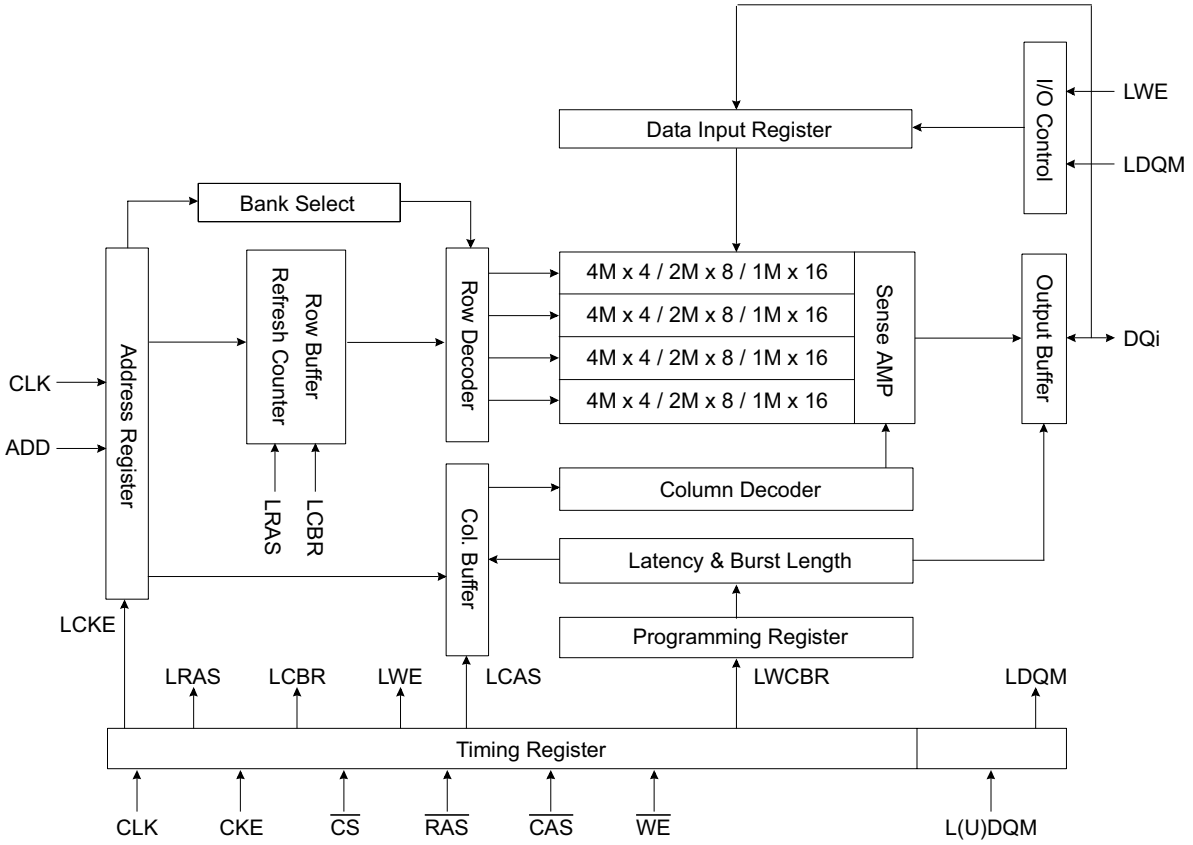

* Samsung Electronics reserves the right to change products or specification without notice.

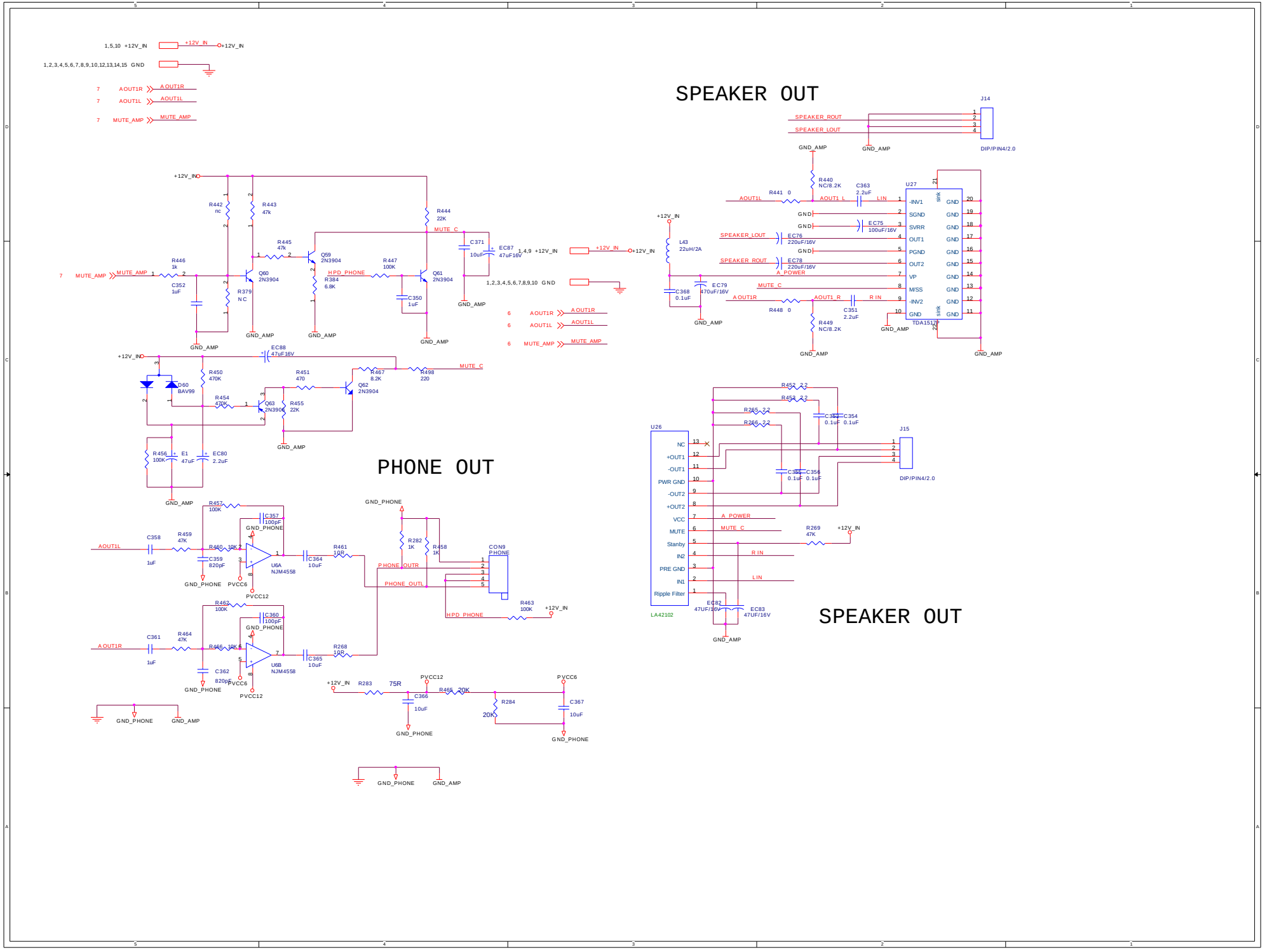
SPEAKER OUT
PHONE OUT
SPEAKER OUT
1,5,10 +12V_IN
+12V_IN
1,2,3,4,5,6,7,8,9,10,12,13,14,15 GND
AOUT1R
AOUT1L
MUTE_AMP
J14
DIP/PIN4/2.0
SPEAKER_ROUT
SPEAKER_LOUT
GND_AMP
R440 NC/8.2K
C363 2.2uF
R441 0
U27
TDA15178
-INV1
SGND
SVRR
OUT1
PGND
OUT2
VP
M/SS
-INV2
GND
EC76 220uF/16V
EC75 100uF/16V
EC78 220uF/16V
A_POWER
MUTE_C
R448 0
R449 NC/8.2K
C351 2.2uF
R IN
LIN
L43 22uH/2A
C368 0.1uF
EC79 470uF/16V
R442 nc
R443 47k
R444 22K
R445 47k
R446 1k
C352 1uF
R379 NC
Q59 2N3904
Q60 2N3904
Q61 2N3904
HPD_PHONE
R384 6.8K
R447 100K
C350 1uF
C371 10uF
EC87 47uF16V
EC88 47uF16V
D60 BAV99
R450 470K
R454 470K
R451 470
R467 8.2K
R498 220
Q62 2N3904
Q63 2N3906
R455 22K
R456 100K
E1 47uF
EC80 2.2uF
R457 100K
C357 100pF
C358 1uF
R459 47K
R460 10K
C359 820pF
U6A NJM4558
PVCC6
PVCC12
R461 10R
C364 10uF
GND_PHONE
R282 1K
R458 1K
CON9 PHONE
PHONE_OUTR
PHONE_OUTL
R463 100K
R462 100K
C360 100pF
C361 1uF
R464 47K
R466 10K
C362 820pF
U6B NJM4558
C365 10uF
R268 10R
R283 75R
C366 10uF
R465 20K
R284 20K
C367 10uF
U26
LA42102
NC
+OUT1
-OUT1
PWR GND
-OUT2
+OUT2
VCC
MUTE
Stanby
IN2
PRE GND
IN1
Ripple Filter
R452 2.2
R453 2.2
R265 2.2
R266 2.2
C353 0.1uF
C354 0.1uF
C355 0.1uF
C356 0.1uF
J15
DIP/PIN4/2.0
R269 47K
EC82 47UF/16V
EC83 47UF/16V
SPEAKER OUT

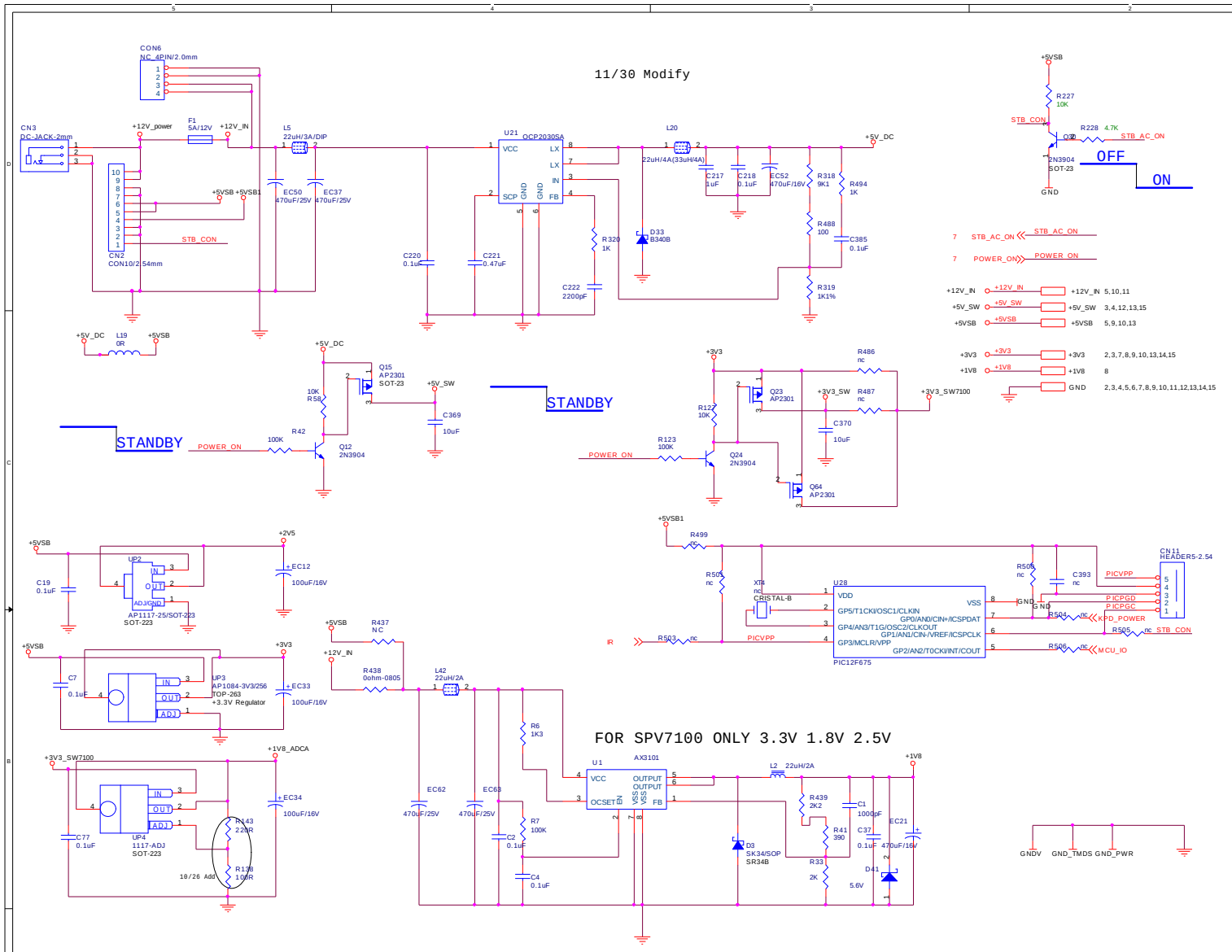

SUNPLUS		
Title: System Power		
Size: C	Document Number: SPTV05-13-V1	Rev: 1.0
Date: Sunday, June 15, 2008	Sheet 1 of 15	

HDMI Input

EDID Defult: NOT write protect

Layout Note
differential impedance 100ohm

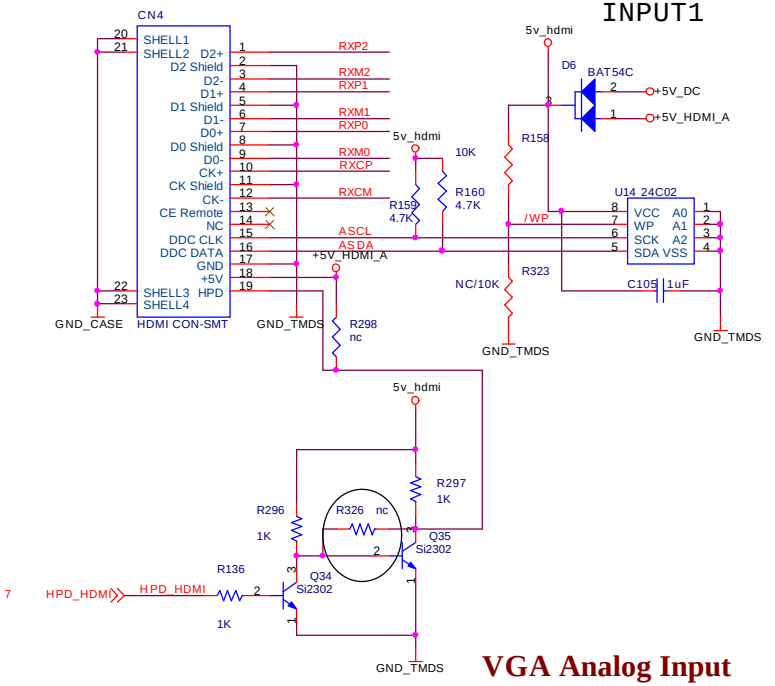

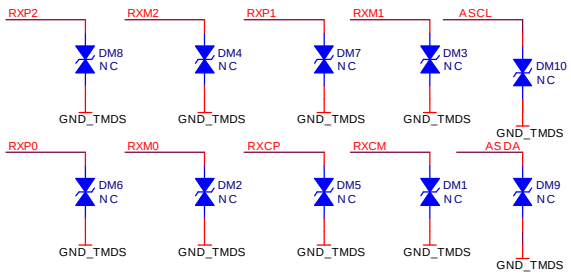

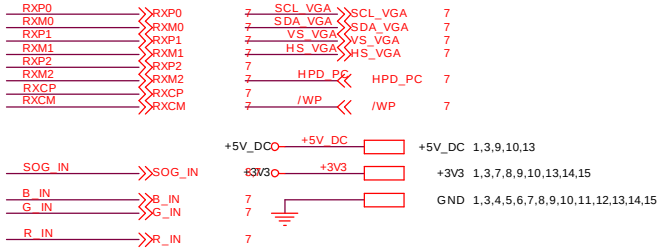

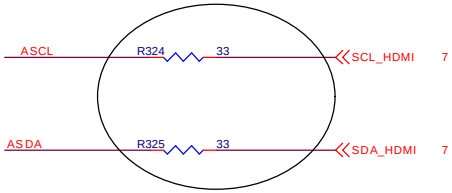

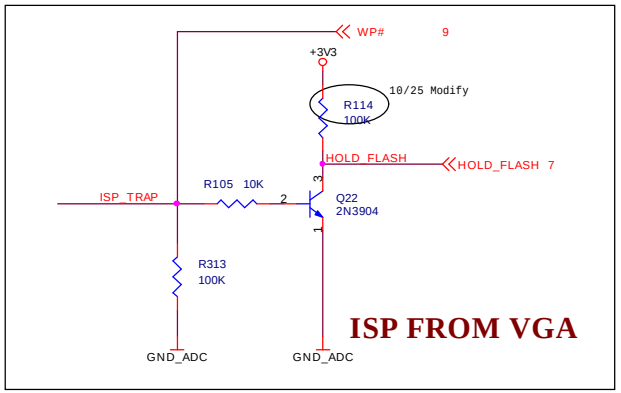

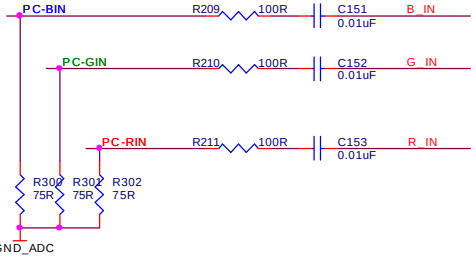

VGA Analog Input

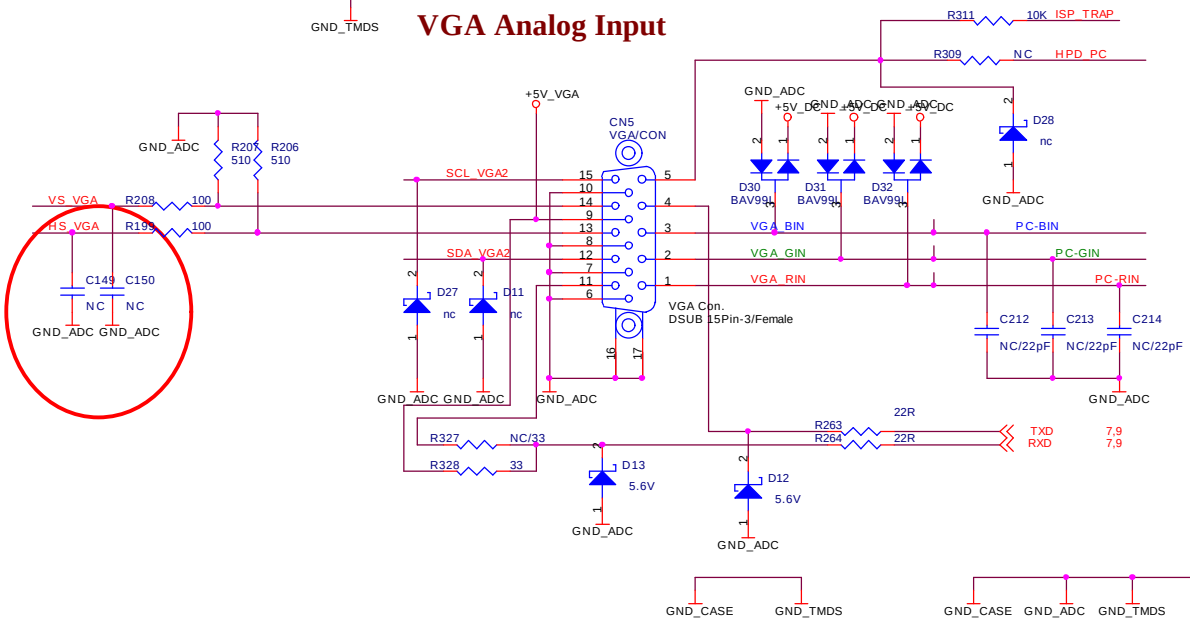

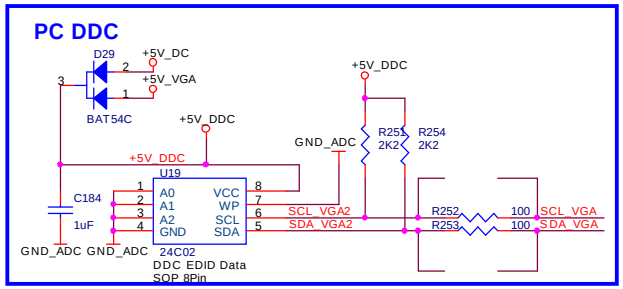

SUNPLUS

Title: HDMI Switch

Size	Document Number	Rev
Custom	SPTV05-13-V1	1.0

Date: Thursday, June 12, 2008 Sheet 2 of 15

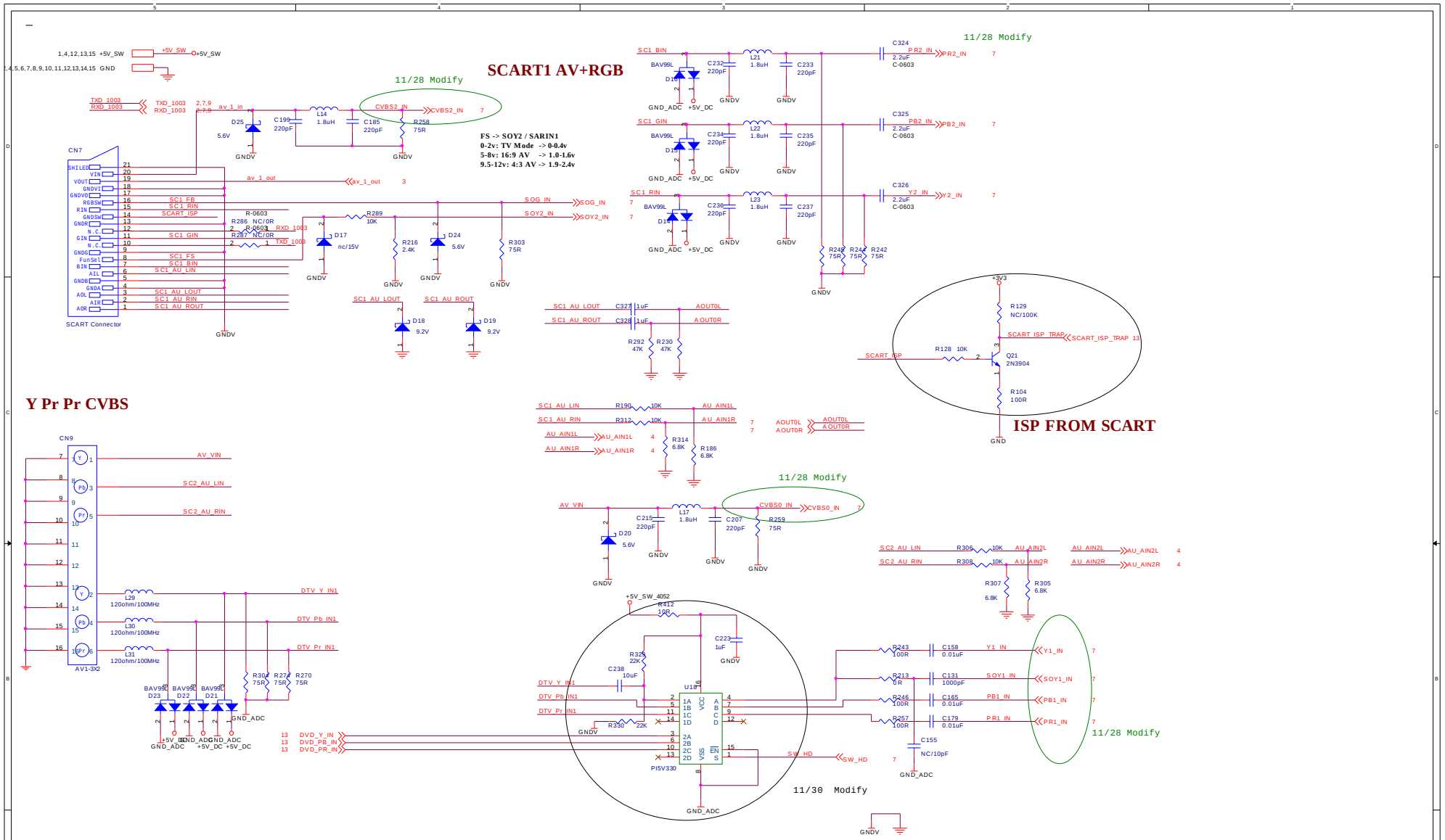
SCART1 AV+RGB
11/28 Modify
FS -> SOY2 / SARIN1
0-2v: TV Mode -> 0-0.4v
5-8v: 16:9 AV -> 1.0-1.6v
9.5-12v: 4:3 AV -> 1.9-2.4v
CN7
SCART Connector
Y Pr Pr CVBS
CN9
AV1-3X2
ISP FROM SCART
11/30 Modify
PI5V330
SUNPLUS
Input-2 Video
SPTV05-13-V1
Rev 1.0
Thursday, May 01, 2008

PC Audio Input

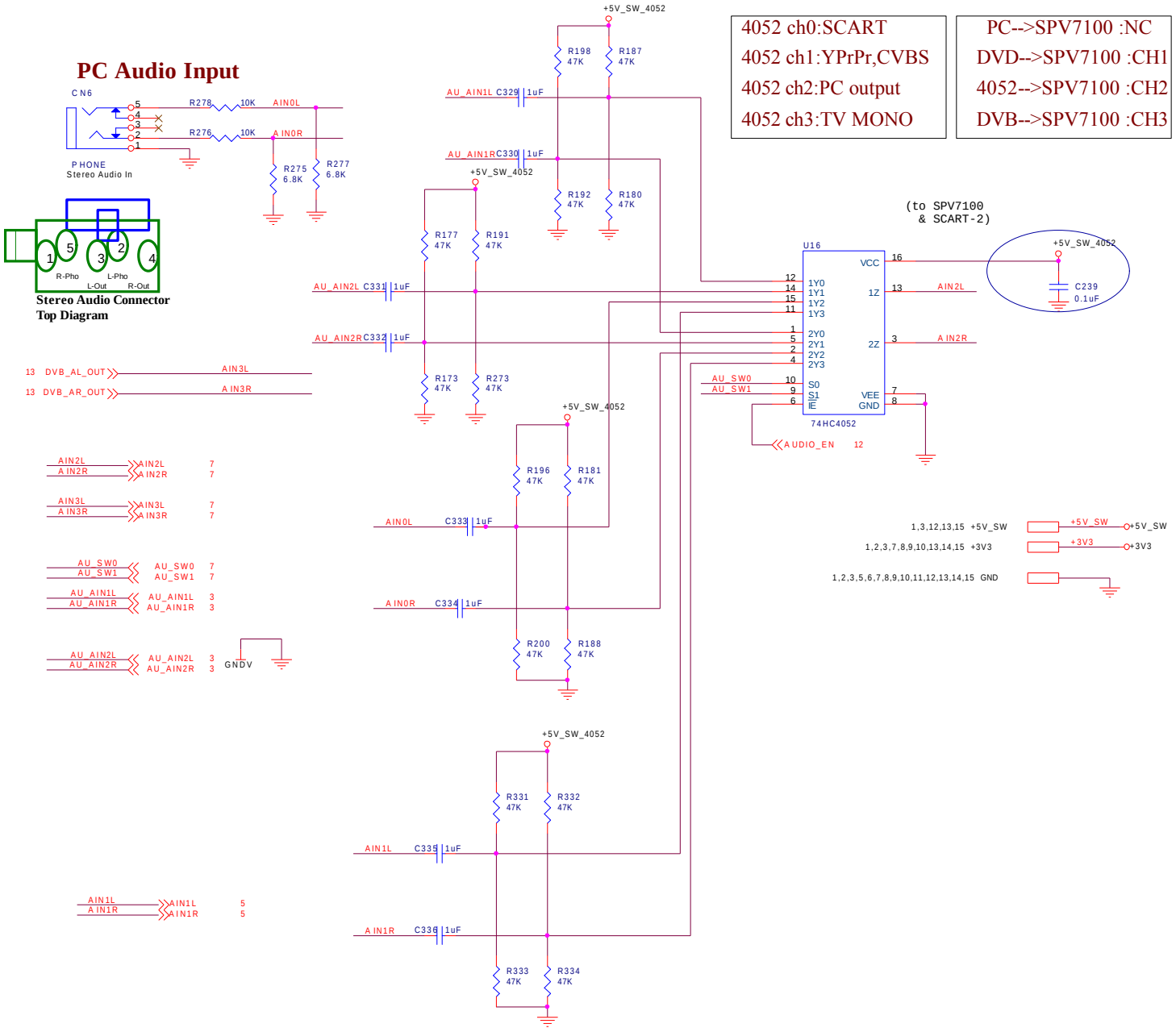

4052 ch0:SCART	PC-->SPV7100 :NC
4052 ch1:YPrPr,CVBS	DVD-->SPV7100 :CH1
4052 ch2:PC output	4052-->SPV7100 :CH2
4052 ch3:TV MONO	DVB-->SPV7100 :CH3

SUNPLUS		
Title: Input-3 Audio and DTV		
Size: A3	Document Number: SPTV05-13-V1	Rev: 1.0
Date: Thursday, May 01, 2008	Sheet 4 of 15	

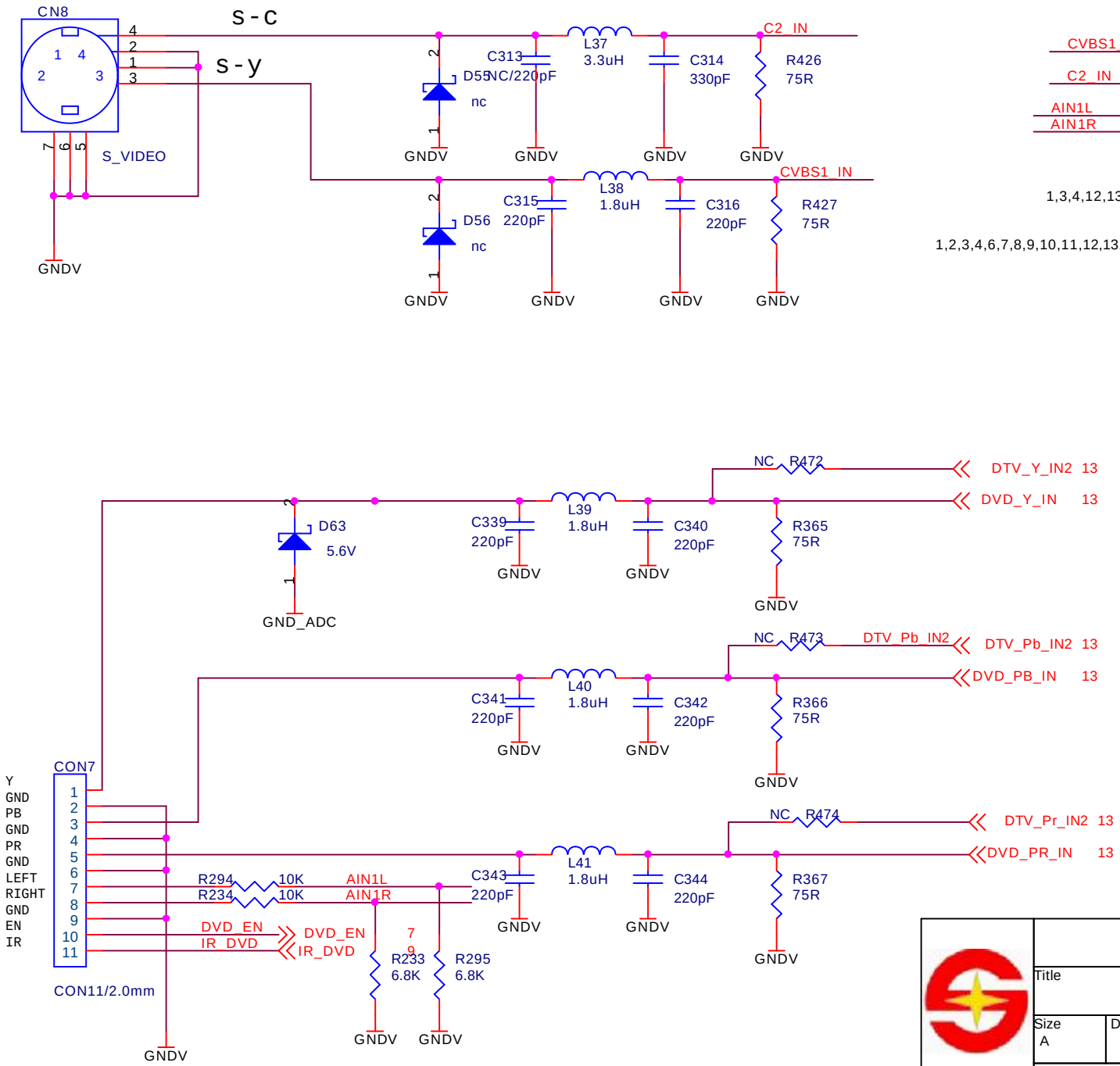

SUNPLUS

Title: Input-2 Video

Size: A

Document Number: SPTV05-13-V1

Rev: 1.0

Date: Thursday, May 01, 2008

Sheet 5 of 15

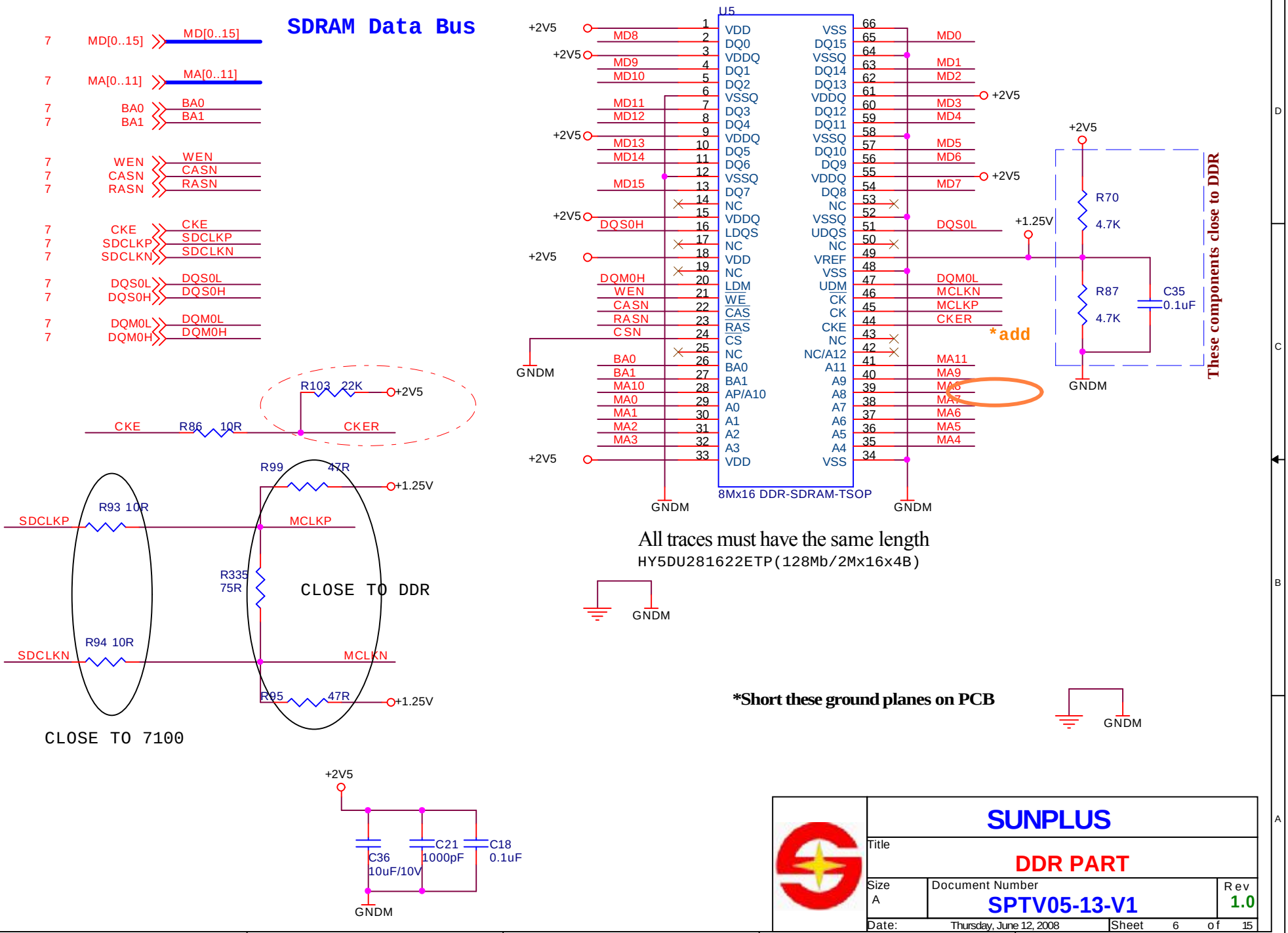

SUNPLUS		
Title: DDR PART		
Size: A	Document Number: SPTV05-13-V1	Rev: 1.0
Date: Thursday, June 12, 2008	Sheet 6 of 15	

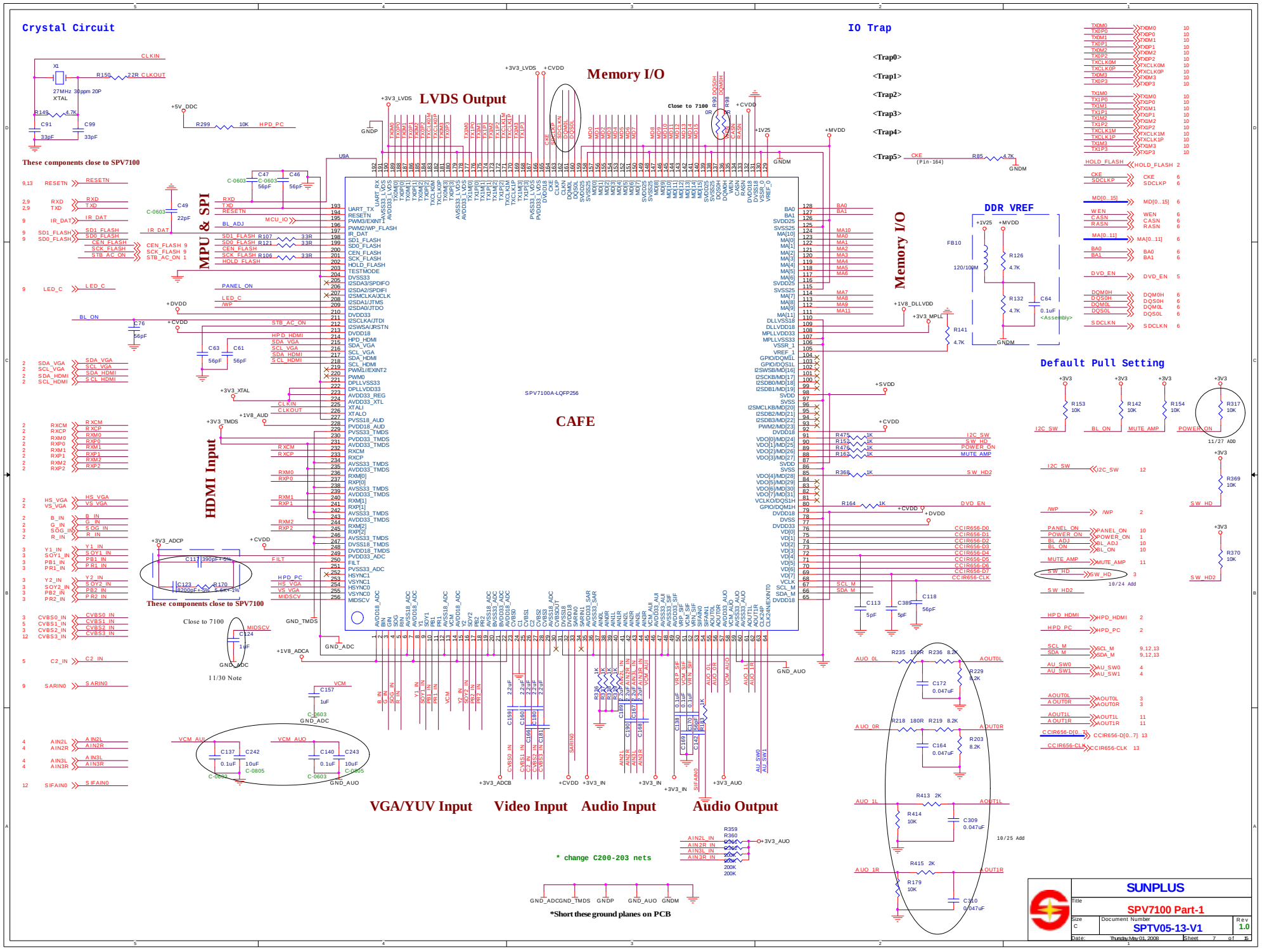
Crystal Circuit
IO Trap
Memory I/O
LVDS Output
MPU & SPI
HDMI Input
CAFE
SPV7100A-LQFP256
DDR VREF
Default Pull Setting
VGA/YUV Input
Video Input
Audio Input
Audio Output
* change C200-203 nets
*Short these ground planes on PCB
These components close to SPV7100
SUNPLUS
SPV7100 Part-1
SPTV05-13-V1
1.0

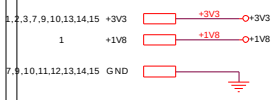

TMDS AUD PLL POWER/GND (1.8V)

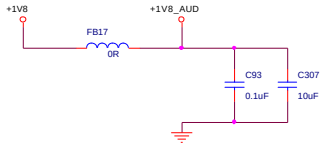

XTAL POWER/GND (3.3V)

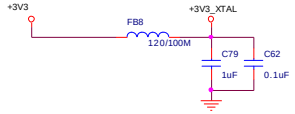

PLL POWER/GND (3.3V/1.8V)

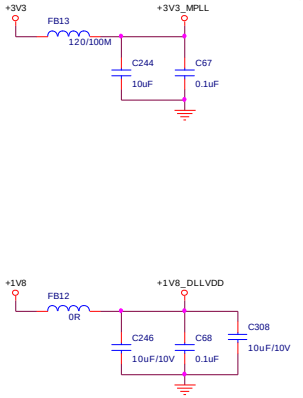

ADC POWER/GND (1.8V/3.3V)

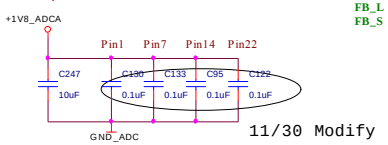

11/30 Modify

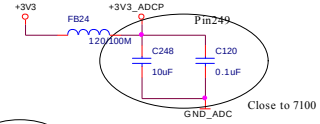

Close to 7100

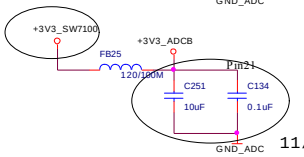

11/30 Modify

Ferrite Beed Spec:
FB : Rdc=0.2 , Z=300/100MHz , Idc=500mA ~ MCB2012S301H
FB_L : Rdc=0.015 , Z=120/100MHz , Idc=6000mA ~ MHC3216S121W
FB_S : Rdc=0.35 , Z=75/100MHz , Idc=300mA ~ MCB1608U750F

***Short these ground planes on PCB**

Power Plane : +5V, +5VSB, +3V3, +3V3_SPV ,+3V3_MC, +2V5,+1V8, +VCC_PNL,+AVDD_ADC

Power Line : +12V, +3V3_ADCP , +3V3_ADCB, +3V3_MPLL , +3V3_DPLL , +1V8_DLLVDD, +1V8_TMDSP, +1V8_TMDS, +1V8_AUD

Ground Plane: GND, GND_ADC, GND_TMDS, GNDV, GNDM, GNDP, ND_LVDS, GND_AUO, GND_AMP

TMDS POWER/GND (1.8V/3.3V)

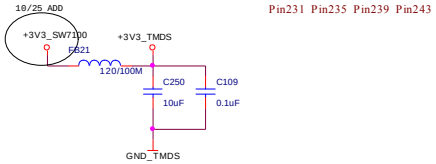

LVDS POWER/GND (3.3V)

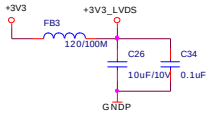

SOURCE POWER/GND (1.8V/2.5V/3.3V)

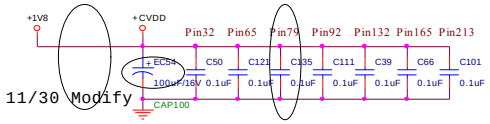

11/30 Modify

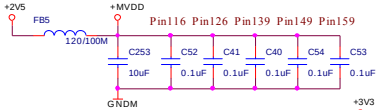

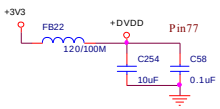

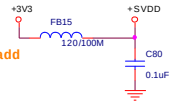

*add

SARADC/SIF/AUDIO POWER/GND (3.3V)

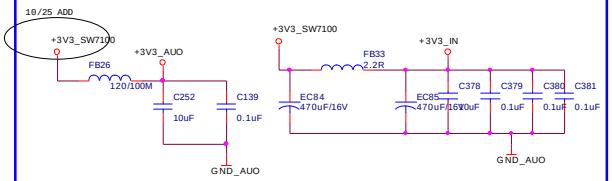

SPV7100 E-Pad

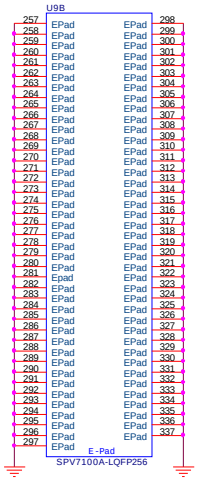

SUNPLUS			
Title	SPV7100 Part-2		
Size Custom	Document Number SPTV05-13-V1		Rev 1.0
Date: Thursday, May 01, 2008	Sheet 8 of 15		

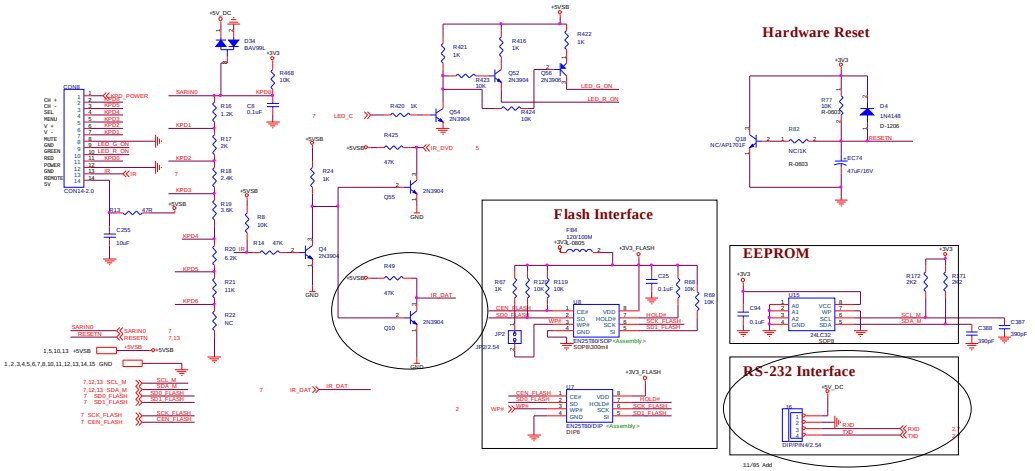

Flash Interface

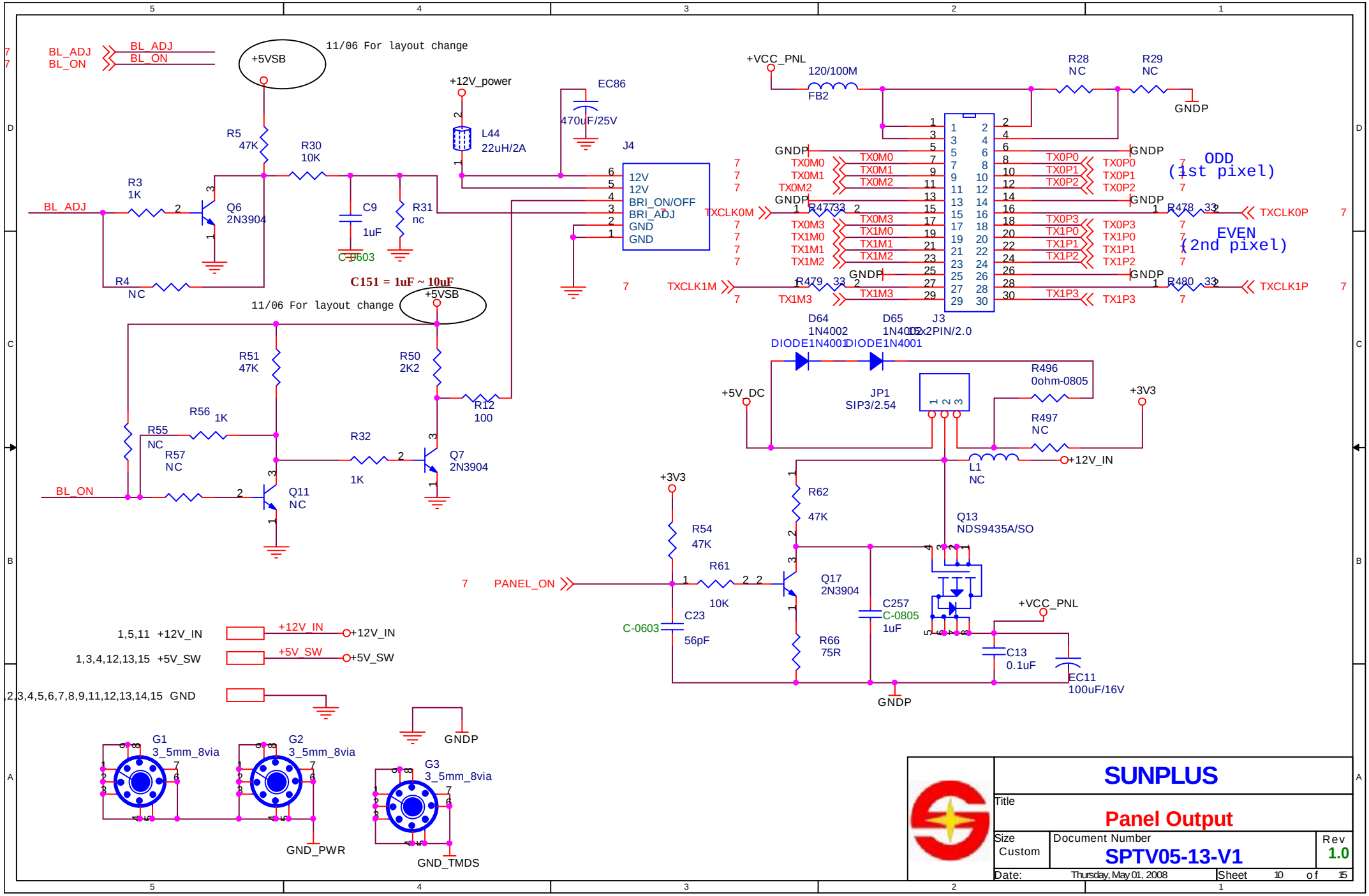

SUNPLUS		
Title: Panel Output		
Size: Custom	Document Number: SPTV05-13-V1	Rev: 1.0
Date: Thursday, May 01, 2008	Sheet 10 of 15	

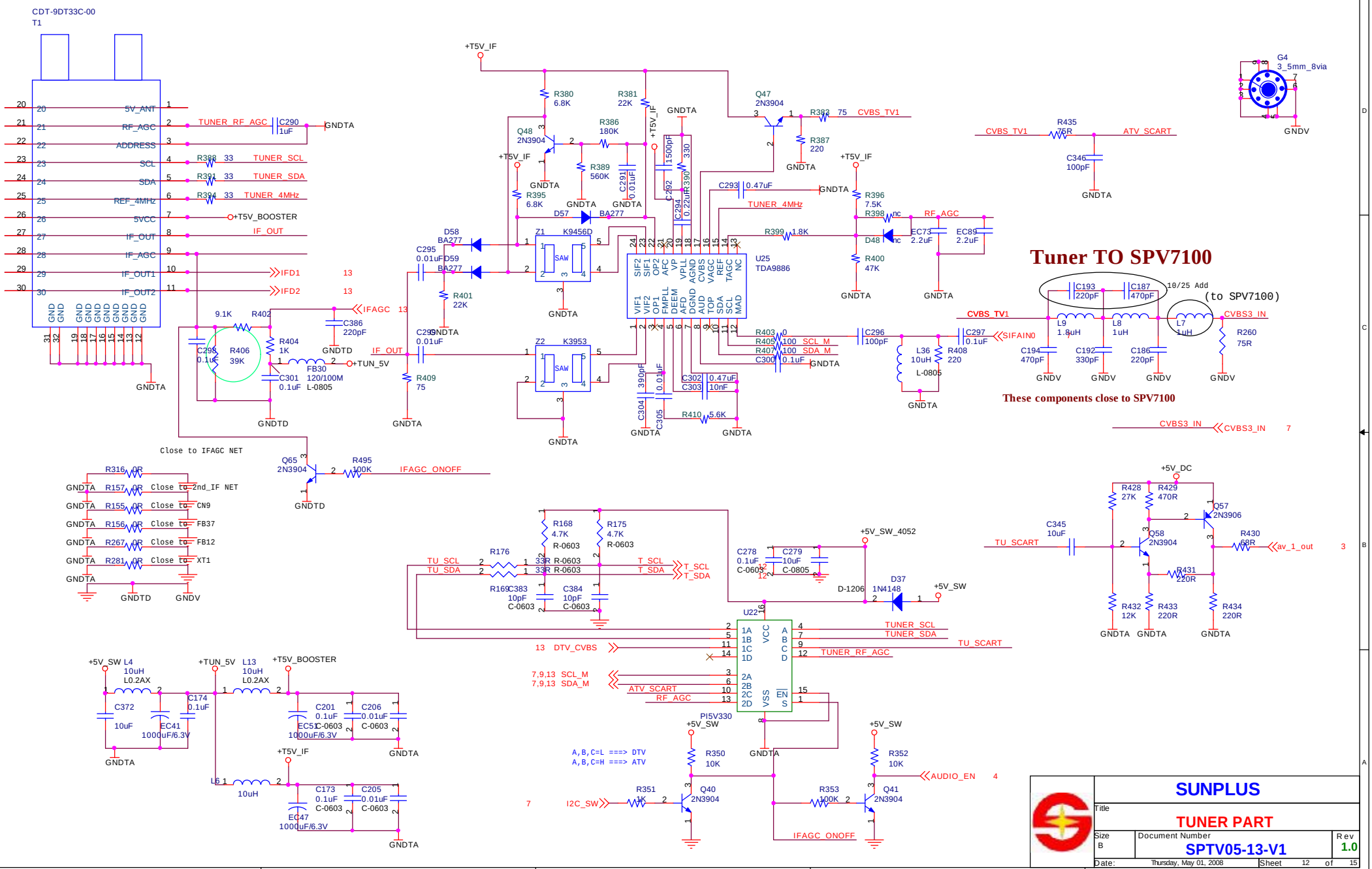
CDT-9DT33C-00
T1
5V_ANT
RF_AGC
ADDRESS
SCL
SDA
REF_4MHz
5VCC
IF_OUT
IF_AGC
IF_OUT1
IF_OUT2
TUNER_RF_AGC
TUNER_SCL
TUNER_SDA
TUNER_4MHz
+T5V_BOOSTER
IFD1
IFD2
IFAGC
+T5V_IF
GNDTA
GNDTD
GNDV
Tuner TO SPV7100
(to SPV7100)
10/25 Add
CVBS_TV1
CVBS3_IN
SIFAIN0
ATV_SCART
TU_SCART
av_1_out
+5V_DC
+5V_SW
+5V_SW_4052
+TUN_5V
IFAGC_ONOFF
Close to IFAGC NET
Close to 2nd_IF NET
Close to CN9
Close to FB37
Close to FB12
Close to XT1
TU_SCL
TU_SDA
T_SCL
T_SDA
DTV_CVBS
SCL_M
SDA_M
RF_AGC
AUDIO_EN
I2C_SW
PI5V330
A,B,C=L ===> DTV
A,B,C=H ===> ATV
These components close to SPV7100
SUNPLUS
TUNER PART
SPTV05-13-V1
Rev 1.0
Date: Thursday, May 01, 2008
Sheet 12 of 15

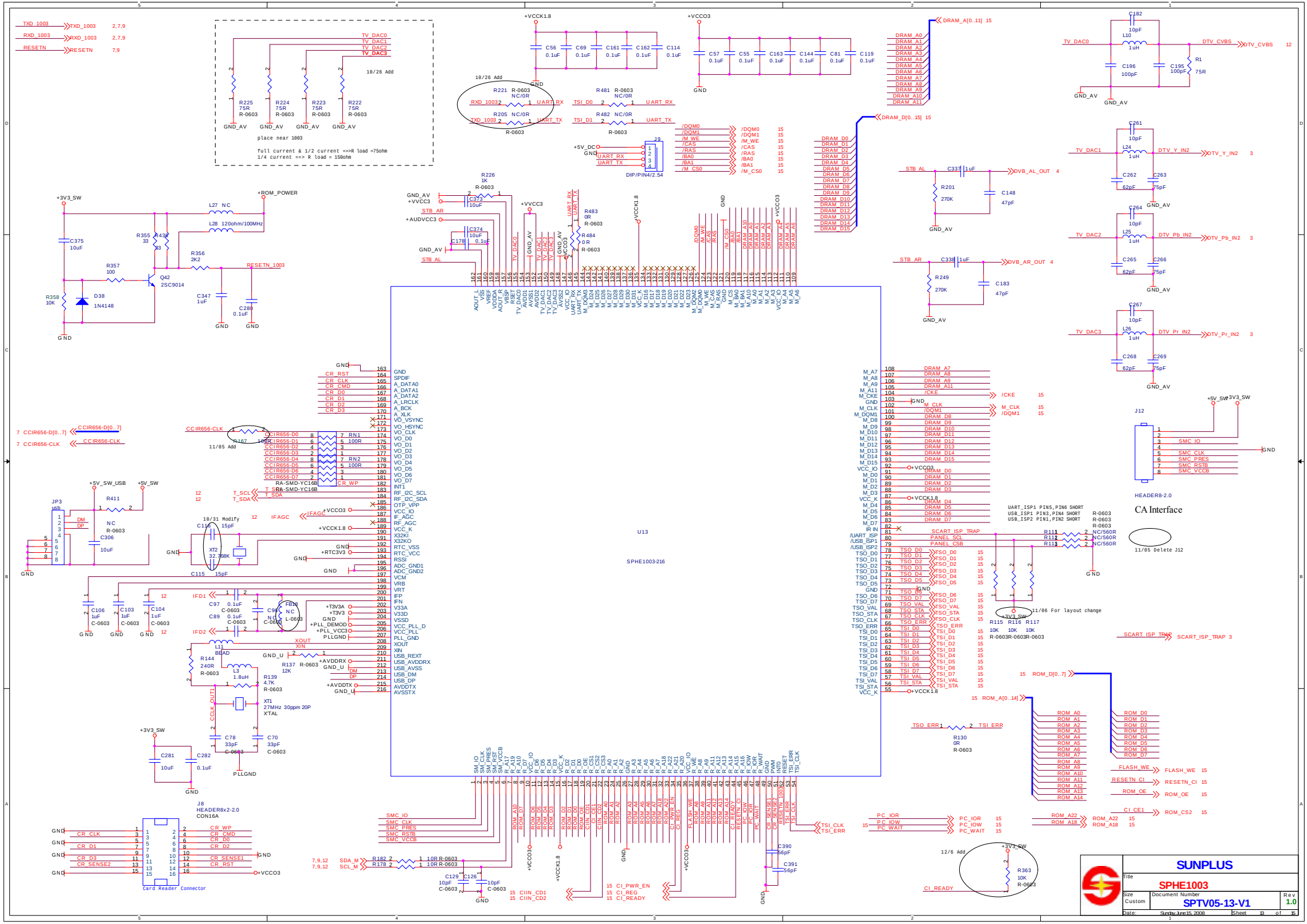
SUNPLUS
Title
SPHE1003
Size
Custom
Document Number
SPTV05-13-V1
Rev
1.0
Date:
Sunday, June 15, 2008
Sheet
13
of
15
U13
SPHE1003-216
CA Interface
J12
HEADER8-2.0
J8
HEADER8x2-2.0
CON16A
Card Reader Connector
DIP/PIN4/2.54
J9
JP3
usb
XT1
27MHz 30ppm 20P
XTAL
XT2
32.768K
Q42
2SC9014
D38
1N4148
+VCCK1.8
+VCCO3
+3V3_SW
+5V_SW
+5V_SW_USB
+ROM_POWER
+AUDVCC3
+VVCC3
+5V_DC
GND
GND_AV
TV_DAC0
TV_DAC1
TV_DAC2
TV_DAC3
DTV_CVBS
DTV_Y_IN2
DTV_Pb_IN2
DTV_Pr_IN2
DVB_AL_OUT
DVB_AR_OUT
DRAM_A[0..11]
DRAM_D[0..15]
ROM_D[0..7]
ROM_A[0..14]
CCIR656-D[0..7]
CCIR656-CLK
SCART_ISP_TRAP
FLASH_WE
RESETN_CI
ROM_OE
CI_CE1
ROM_CS2
ROM_A22
ROM_A18
TSI_CLK
TSI_ERR
PC_IOR
PC_IOW
PC_WAIT
CI_READY
CI_PWR_EN
CI_REG
CI_READY
CIIN_CD1
CIIN_CD2
SDA_M
SCL_M
UART_RX
UART_TX
RESETN_1003
TXD_1003
RXD_1003
RESETN
IFAGC
IFD1
IFD2
XOUT
XIN
PLLGND
CLK_OUT1
T_SCL
T_SDA
CR_WP
CR_CMD
CR_CLK
CR_D0
CR_D1
CR_D2
CR_D3
CR_SENSE1
CR_SENSE2
CR_RST
SMC_IO
SMC_CLK
SMC_PRES
SMC_RSTB
SMC_VCCB
M_CLK
/DQM1
/CKE
/DQM0
/M_WE
/CAS
/RAS
/BA0
/BA1
/M_CS0
SCART_ISP_TRAP
PANEL_SCL
PANEL_CSB
TSO_ERR
TSI_ERR
ROM_D0
ROM_D1
ROM_D2
ROM_D3
ROM_D4
ROM_D5
ROM_D6
ROM_D7
ROM_A0
ROM_A1
ROM_A2
ROM_A3
ROM_A4
ROM_A5
ROM_A6
ROM_A7
ROM_A8
ROM_A9
ROM_A10
ROM_A11
ROM_A12
ROM_A13
ROM_A14
UART_ISP1 PIN5,PIN6 SHORT
USB_ISP1 PIN3,PIN4 SHORT
USB_ISP2 PIN1,PIN2 SHORT
11/05 Delete J12
11/06 For layout change
10/26 Add
12/6 Add
11/05 Add
10/31 Modify
place near 1003
full current & 1/2 current ==>R load =75ohm
1/4 current ==> R load = 150ohm

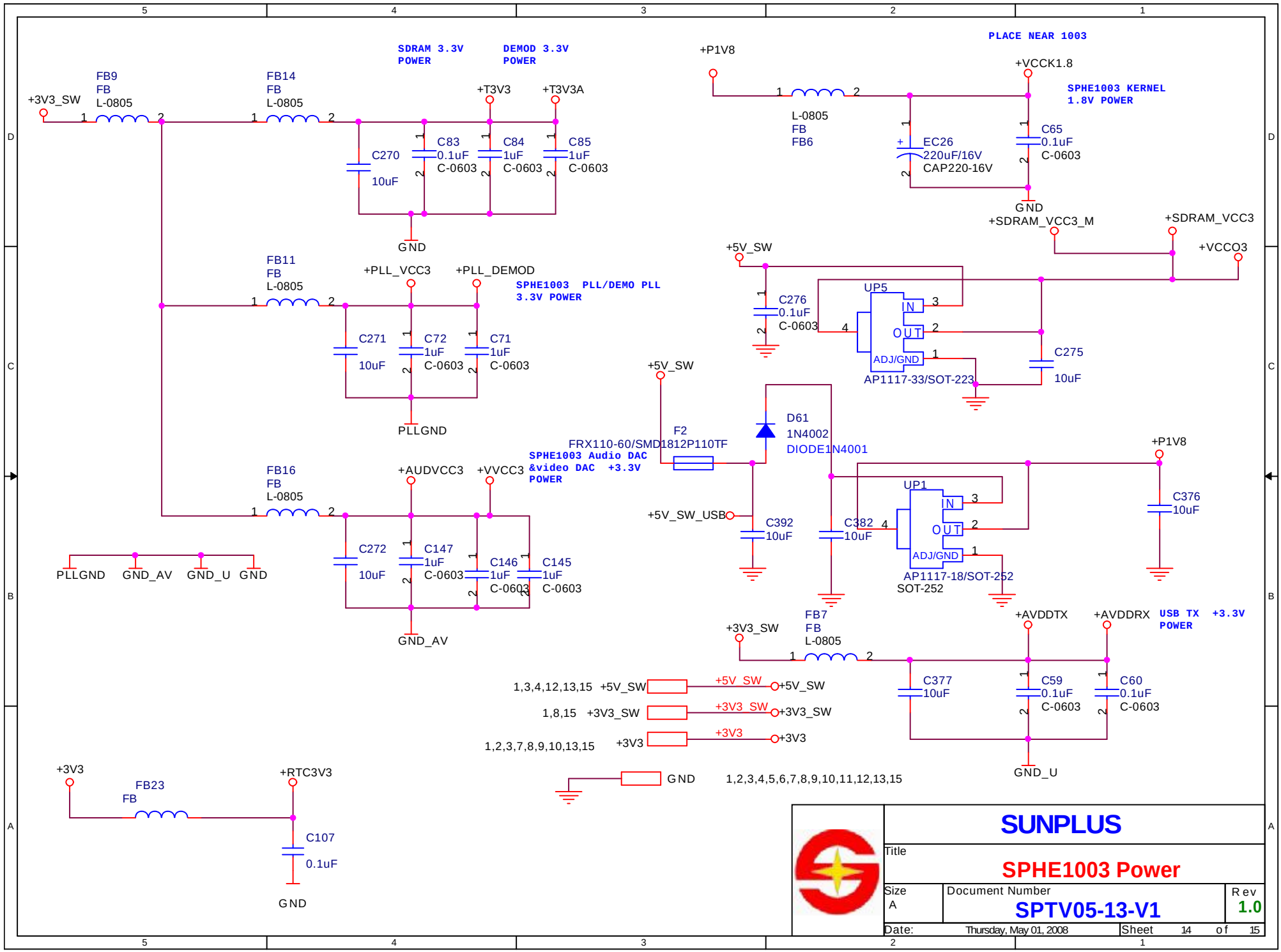
SDRAM 3.3V POWER
DEMOD 3.3V POWER
PLACE NEAR 1003
+3V3_SW
FB9
FB
L-0805
FB14
FB
L-0805
+T3V3
+T3V3A
C270
10uF
C83
0.1uF
C-0603
C84
1uF
C-0603
C85
1uF
C-0603
GND
+P1V8
L-0805
FB
FB6
EC26
220uF/16V
CAP220-16V
+VCCK1.8
SPHE1003 KERNEL 1.8V POWER
C65
0.1uF
C-0603
GND
+SDRAM_VCC3_M
+SDRAM_VCC3
+VCCO3
FB11
FB
L-0805
+PLL_VCC3
+PLL_DEMOD
SPHE1003 PLL/DEMO PLL 3.3V POWER
C271
10uF
C72
1uF
C-0603
C71
1uF
C-0603
PLLGND
+5V_SW
C276
0.1uF
C-0603
UP5
IN
OUT
ADJ/GND
AP1117-33/SOT-223
C275
10uF
+5V_SW
F2
FRX110-60/SMD1812P110TF
D61
1N4002
DIODE1N4001
SPHE1003 Audio DAC &video DAC +3.3V POWER
FB16
FB
L-0805
+AUDVCC3
+VVCC3
C272
10uF
C147
1uF
C-0603
C146
1uF
C-0603
C145
1uF
C-0603
GND_AV
PLLGND
GND_AV
GND_U
GND
+5V_SW_USB
C392
10uF
C382
10uF
UP1
IN
OUT
ADJ/GND
AP1117-18/SOT-252
SOT-252
+P1V8
C376
10uF
+3V3_SW
FB7
FB
L-0805
+AVDDTX
+AVDDRX
USB TX +3.3V POWER
C377
10uF
C59
0.1uF
C-0603
C60
0.1uF
C-0603
GND_U
1,3,4,12,13,15 +5V_SW
+5V_SW
+5V_SW
1,8,15 +3V3_SW
+3V3_SW
+3V3_SW
1,2,3,7,8,9,10,13,15 +3V3
+3V3
+3V3
GND
1,2,3,4,5,6,7,8,9,10,11,12,13,15
+3V3
FB23
FB
+RTC3V3
C107
0.1uF
GND
SUNPLUS
Title
SPHE1003 Power
Size
A
Document Number
SPTV05-13-V1
Rev
1.0
Date: Thursday, May 01, 2008
Sheet 14 of 15

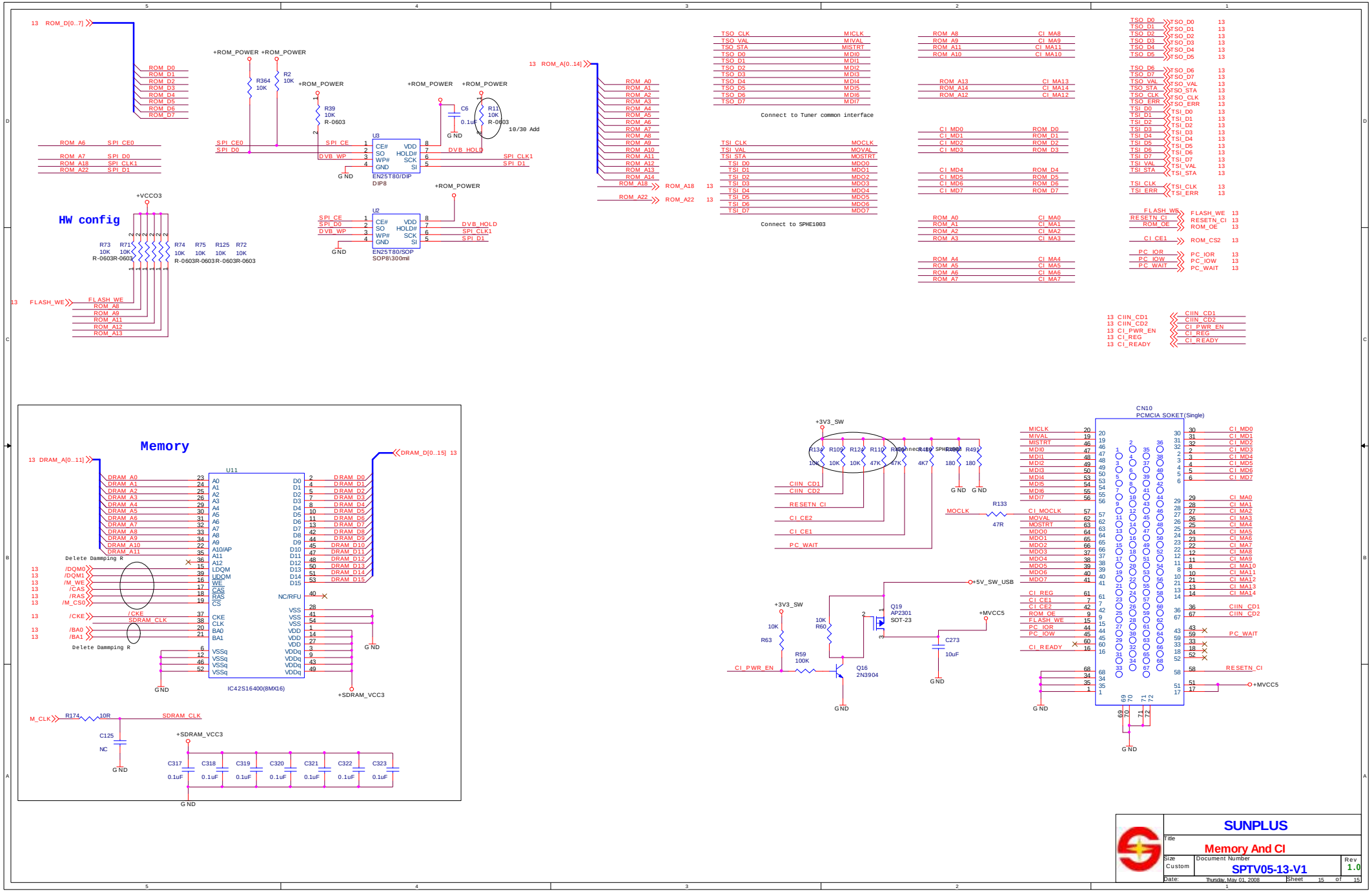
HW config
Memory
U3
EN25T80/DIP
DIP8
U2
EN25T80/SOP
SOP8\300mil
U11
IC42S16400(8MX16)
CN10
PCMCIA SOKET(Single)
Connect to Tuner common interface
Connect to SPHE1003
Delete Dammping R
+SDRAM_VCC3
+MVCC5
+5V_SW_USB
Q19
AP2301
SOT-23
Q16
2N3904
SUNPLUS
Memory And CI
Size
Custom
Document Number
SPTV05-13-V1
Rev
1.0
Date:
Thursday, May 01, 2008
Sheet
15
of
15

HK-HDMI-CI-SUNTV-V2.55 -EURO(RoHS)

	Name	Type	Part Reference	Dosage	Total Dosage
	socket				
	HEADER 2	2P pin（linker2.54mm distance） no clasp, stand	JP2	1	
	HEADER 3	3P pin（linker2.54mm distance） no clasp, stand	JP1	1	
	CON4/2.0mm	4P pin（linker2.0mm distance）no clasp, stand	J14,CON6	2	
	CON6/2.0mm	6P pin（linker2.0mm distance）no clasp, stand	J4	1	
	CON11/2.0mm	11P pin（linker2.0mm distance）no clasp, stand	CON7	1	
	CON14/2.0mm	14P pin（linker2.0mm distance）no clasp, stand	CON8	1	
	CON4/2.54mm	4P pin（linker2.54mm distance）no clasp, stand	J9,J6	2	
	CON10/2.54mm	10P pin（linker2.54mm distance）no clasp, stand	CN2	1	
	DB15	DZ11A31-B8 (15P-Dsub,30X8mm)	CN5	1	
	BNC	Dcpower socket2.0mm	CN3	1	
	PHONE JACK	Audio input socket	CON9,CN6	2	
	15x2PIN	15X2Pin（linker2.0 diatance）	J3	1	
	HDMI_J	HDMI JACK	CN4	1	
	USB-JACK	USB JACK	JP3	1	
	S-VIDEO JACK	S-VIDEO JACK	CN8	1	
	component	6 hole double row AV jack(top line Green Blue Red,dowm line Yellow White Red)	CN9	1	
	SCART	SCART JACK	CN7	1	
	PCMCIA SOKET	PCMCIA NON-PUSH	CN10	1	
	YX438901	SURFACE ACOUSTIC WAVE FILTER	Z2	1	
	YX938908	SURFACE ACOUSTIC WAVE FILTER	Z1	1	
	crystal				
	32.768K	32.768KHZ quartz crystal surge	XT2	1	
	27.000MT	27MHZ quartz crystal surge(49S) 30ppm	XT1,X1	2	
	diode				
	SSM5822/SK34	commute diode60V/3Asoon restore,	D3	1	
	1N4148	patch diode	D4,D37,D38	3	
	1N4002/1N4004(DIP)	patch diode	D61,D64,D65	3	
	BA277	brand patch diode	D57,D58,D59	3	
	9.1V	diode 9.1V	D18,D19	2	
	5.6V	diode 5.6V	D12,D13,D20,D24,D25,D41,D63	7	
	SK34	commute diode60V/3Asoon restore,	D33	1	
	audion				
	BAV99	ESD patch double diode	D14,D15,D16,D21,D22,D23,D30,D31,D32,D34,D60	11	

	2N3906	patch audion,SOT23,PNP TR,VCEO=40V/IC=200mA,DII/AUK	Q56,Q57,Q63	3	
	2N3904	patch audion,SOT23,NPN TR,VCEO=40V/IC=200mA,DII/AUK	Q4,Q6,Q7,Q10,Q12,Q16,Q17,Q21,Q22,Q24,Q30,Q40,Q41,Q47,Q48,Q52,Q54,Q55,Q58,Q59,Q60,Q61,Q62,Q65	24	
	BAT54C	patch double diode,SOT23	D6,D29	2	
	SI2301	patch audion,SOT23,MOS pipe	Q15,Q19,Q23,Q64	4	
	SI2302	patch audion,SOT23,MOS pipe	Q34,Q35	2	
	9014	patch double diode,SOT23	Q42	1	
	electrolyse capacitance				
	47uF/16V	electrolyse capacitance(5X7) 16V ± 20%	EC74,E1,EC88	3	
	100uF/16V	electrolyse capacitance(5X7) 16V ± 20%	EC12,EC33,EC34,EC54,EC75	5	
	100uF/16V	electrolyse capacitance(6.3X5) 16V ± 20%	EC11	1	
	220uF/16V	electrolyse capacitance(6.3X7) 16V ± 20%	EC26,EC76,EC78	3	
	470uF/16V	electrolyse capacitance(8X9) 16V ± 20%	EC21,EC52,EC79,EC84,EC85,EC37,EC50,EC62,EC63,EC86	10	
	1000uF/6.3V	electrolyse capacitance(8X12) 6.3V ± 20%	EC41,EC47,EC51	3	
	inductance				
	22uH/2A	inductance 8*7, SMD	L2,L42,L43,L44	4	
	22uH/3A	horizontalcircle inductance 33μH±20%	L5	1	
	22uH/4A	horizontalcircle inductance 33μH±20%	L20	1	
	1uH	inductance 0805, SMD	L7,L8,L10,L24,L25,L26	6	
	1.8uH	inductance 0805, SMD	L9,L14,L17,L38,L39,L40,L41,L21,L22,L23	10	
	3.3uH	inductance 0805, SMD	L37	1	
	10uH	inductance 4*6MM DIP	L4,L6,L13,	3	
	10uH	inductance 0805,SMD	L36	1	
	Fuse				
	PTC thermistor	FRX110-60&SMD1812P110TF(1.1A),SMD	F2	1	
	fuse	12V/5A, DIP	F1	1	
	BEAD				
	120/100M	0805 BEAD,SMD	FB3,FB4,FB5,FB8,FB10,FB13,FB15,FB21,FB22,FB24,FB25,FB26,FB30,L28,FB6,FB7,FB9,FB11,FB14,FB16,FB23,L29,L30,L31,FB2	25	
	120/100M	0603 BEAD,SMD	L3,L11	2	
	Resistance				
	100R×4	4 x resistor KX0603 1/16W ±5%	RN1,RN2	2	
	Resistance				
	0R	resistor KX0603 1/16W ±5%	R90,R98,R130,R155,R156,R213,R281,R316,R483,R484,R403,R441,R448	13	
	0R 0805	resistor KX0805 1/16W ±5%	FB12,FB17,R438,L19,R496	5	
	2.2R	resistor KX0603 1/16W ±5%	R265,R266,R452,R453	4	
	2.2R 0805	resistor KX0805 1/16W ±5%	FB33	1	
	10R	resistor KX0603 1/16W ±5%	R86,R93,R94,R174,R178,R182,R268,R412,R461	9	
	22R	resistor KX0603 1/16W ±5%	R150,R263,R264	3	

	33R	resistor KX0603 1/16W ±5%	R106,R107,R121,R169,R176,R324,R325,R328,R355,R388,R391,R394,R436,R477,R478,R479,R480	17	
	47R	resistor KX0603 1/16W ±5%	R133,R13,R95,R99,	4	
	68R	resistor KX0603 1/16W ±5%	R430	1	
	75R	resistor KX0603 1/16W ±5%	R1,R66,R222,R223,R224,R225,R242,R244,R245,R258,R259,R260,R270,R274,R283,R300,R301,R302,R303,R304,R335,R365,R366,R367,R426,R427,R435,R409,R383	29	
	100R	resistor KX0603 1/16W ±5%	R12,R104,R138,R167,R209,R210,R211,R243,R246,R257,R199,R208,R357,R405,R407,R488,R252,R253	18	
	180R	resistor KX0603 1/16W ±5%	R218,R235,R490,R491	4	
	220R	resistor KX0603 1/16W ±5%	R143,R431,R433,R434,R387,R408,R498	7	
	240R	resistor KX0603 1/16W ±5%	R144	1	
	330R	resistor KX0603 1/16W ±5%	R390	1	
	390R	resistor KX0603 1/16W ±5%	R41	1	
	470R	resistor KX0603 1/16W ±5%	R429,R451	2	
	510R	resistor KX0603 1/16W ±5%	R206,R207	2	
	1K	resistor KX0603 1/16W ±5%	R3,R32,R56,R67,R136,R152,R162,R164,R183,R226,R282,R296,R297,R320,R336,R337,R338,R339,R351,R368,R404,R416,R420,R421,R422,R446,R458,R475,R476,R494,R24,	31	
	1.2K	resistor KX0603 1/16W ±5%	R16	1	
	1.3K	resistor KX0603 1/16W ±5%	R6	1	
	1.8K	resistor KX0603 1/16W ±5%	R399	1	
	2K	resistor KX0603 1/16W ±5%	R17,R33,R413,R415	4	
	1K 1%	resistor KX0603 1/16W ±1%	R319	1	
	2.2K	resistor KX0603 1/16W ±5%	R50,R171,R172,R251,R254,R356,R439	7	
	2.4K	resistor KX0603 1/16W ±5%	R18,R216	2	
	3.6K	resistor KX0603 1/16W ±5%	R19	1	
	4.7K	resistor KX0603 1/16W ±5%	R70,R85,R87,R126,R132,R139,R141,R149,R159,R160,R168,R175,R228,R489	14	
	5.6K	resistor KX0603 1/16W ±5%	R410	1	
	5.6K 1%	resistor KX0603 1/16W ±1%	R170	1	
	6.2K	resistor KX0603 1/16W ±5%	R20	1	
	6.8K	resistor KX0603 1/16W ±5%	R186,R233,R275,R277,R295,R305,R307,R314,R380,R384,R395	11	
	7.5K	resistor KX0603 1/16W ±5%	R396	1	
	8.2K	resistor KX0603 1/16W ±5%	R203,R219,R229,R236,R467	5	
	9.1K	resistor KX0603 1/16W ±5%	R402,R318	2	
	10K	resistor KX0603 1/16W ±5%	R2,R11,R30,R39,R58,R60,R61,R63,R68,R69,R71,R72,R73,R74,R75,R77,R105,R109,R115,R116,R117,R119,R120,R124,R125,R127,R128,R134,R142,R153,R154,R158,R179,R190,R227,R234,R276,R278,R289,R294,R299,R306,R308,R311,R312,R317,R350,R352,R358,R363,R364,R369,R370,R414,R423,R424,R460,R466,R468,R8	60	
	11K	resistor KX0603 1/16W ±5%	R21	1	
	12K	resistor KX0603 1/16W ±5%	R137,R432	2	

	20K	resistor KX0603 1/16W ±5%	R284,R465	2	
	22K	resistor KX0603 1/16W ±5%	R103,R329,R330,R381,R401,R444,R455	7	
	27K	resistor KX0603 1/16W ±5%	R428	1	
	39K	resistor KX0603 1/16W ±5%	R406	1	
	47K	resistor KX0603 1/16W ±5%	R5,R49,R51,R54,R62,R110,R173,R177,R180,R181,R187,R188,R191,R192,R196,R198,R200,R230,R269,R273,R292,R331,R332,R333,R334,R400,R425,R443,R445,R464,R459,R485,R14,	33	
	100K	resistor KX0603 1/16W ±5%	R7,R42,R59,R114,R123,R313,R353,R447,R456,R463,R495,R457,R462	13	
	180K	resistor KX0603 1/16W ±5%	R386	1	
	270K	resistor KX0603 1/16W ±5%	R201,R249	2	
	200K	resistor KX0603 1/16W ±5%	R359,R360,R361,R362	4	
	470K	resistor KX0603 1/16W ±5%	R454,R450	2	
	560K	resistor KX0603 1/16W ±5%	R389	1	
	capacitance				
	5pF	capacitance CC41-0603 16V±5%	C113,C389	2	
	10pF	capacitance CC41-0603 16V±5%	C126,C129,C182,C261,C264,C267,C383,C384	8	
	15pF	capacitance CC41-0603 16V±5%	C116,C115	2	
	22pF	capacitance CC41-0603 16V±5%	C49	1	
	33pF	capacitance CC41-0603 16V±5%	C70,C78,C91,C99	4	
	47pF	capacitance CC41-0603 16V±5%	C148,C183	2	
	56pF	capacitance CC41-0603 16V±5%	C23,C46,C47,C61,C63,C76,C142,C390,C391	9	
	62pF	capacitance CC41-0603 16V±5%	C262,C265,C268	3	
	75pF	capacitance CC41-0603 16V±5%	C263,C266,C269	3	
	100pF	capacitance CC41-0603 16V±5%	C195,C196,C296,C346,C357,C360	6	
	220pF	capacitance CC41-0603 16V±10%	C185,C186,C193,C199,C207,C215,C232,C233,C234,C235,C236,C237,C315,C316,C339,C340,C341,C342,C343,C344,C386	21	
	330pF	capacitance CC41-0603 16V±10%	C192,C314	2	
	390pF	capacitance CC41-0603 16V±10%	C117	1	
	390pF	capacitance CC41-0603 16V±10%	C304,C387,C388	3	
	470pF	capacitance CC41-0603 16V±10%	C194,C187	2	
	1nF	capacitance CC41-0603 16V±10%	C1,C21,C131	3	
	1.5nF	capacitance CC41-0603 16V±10%	C292	1	
	2.2nF	capacitance CC41-0603 16V±10%	C222	1	
	10nF	capacitance CC41-0603 16V±10%	C151,C152,C153,C158,C165,C179,C205,C206,C291,C295,C299,C305,C303	13	
	47nF	capacitance CC41-0603 16V±10%	C164,C172,C309,C310	4	
	8200pF	capacitance CC41-0603 16V±10%	C123	1	

	0.1uF	capacitance CC41-0603 6V-20%+80%	C2,C4,C6,C7,C8,C13,C18,C19,C25,C34,C35,C39,C40,C41,C50,C52,C53,C54,C55,C56,C57,C58,C59,C60,C62,C64,C65,C66,C67,C68,C69,C77,C80,C81,C83,C89,C93,C94,C95,C97,C101,C107,C109,C111,C114,C119,C120,C121,C122,C130,C133,C134,C135,C137,C138,C139,C140,C144,C161,C162,C163,C169,C170,C173,C174,C178,C201,C218,C220,C239,C276,C278,C280,C282,C297,C298,C300,C301,C317,C318,C319,C320,C321,C322,C323,C353,C354,C355,C356,C368,C379,C380,C381,C385	94	
	0.1uF 0805	capacitance CC41-0805 16V-20%+80%	C37	1	
	0.22uF	capacitance CC41-0603 16V-20%+80%	C294	1	
	0.47uF	capacitance CC41-0603 16V-20%+80%	C221,C293,C302	3	
	1uF	capacitance CC41-0603 10V-20%+80%	C9,C71,C72,C79,C84,C85,C103,C104,C105,C106,C124,C145,C146,C147,C157,C184,C217,C223,C290,C327,C328,C329,C330,C331,C332,C333,C334,C335,C336,C337,C338,C347,C350,C352,C358,C361	36	
	1uF 0805	capacitance CC41-0805 6V-20%+80%	C257	1	
	2.2uF	capacitance CC41-0603 10V-20%+80%	EC80,C159,C160,C166,C167,C168,C180,C181,C189,C190,C324,C325,C326,C351,C363	15	
	2.2uF 0805	capacitance CC41-08056V-20%+80%	EC73,EC89	2	
	10uF/10V	capacitance CC41-0805	C26,C36,C246,C308	4	
	10uF	capacitance CC41-0805	C238,C242,C243,C244,C247,C248,C250,C251,C252,C253,C254,C255,C270,C271,C272,C273,C275,C279,C281,C306,C307,C364,C365,C366,C367,C369,C370,C371,C372,C373,C374,C375,C376,C377,C378,C382,C392,C345	38	
	PCB				
	PCB	HK-HDMI-CI-SUNTV-V2.52			
	Dispel heat metal	28*28*6	U9	1	
	Dispel heat metal	26*9*5	U27	1	
	IC				
	HY5DU281622FTP-5	8Mx16 DDR	U5	1	
	W9812G6GH-6	8MX16 SDRAM	U11	1	
	NJM4558	integrate circuit	U6	1	
	SPHE1003A	integrate circuit	U13	1	
	AX3101	integrate circuit	U1	1	
	SPV7100E	QFP256-0.4-PADB	U9	1	
	74HC4052D	integrate circuit	U16	1	
	PI5V330/CT3257A	integrate circuit	U22,U18	2	
	FT24C02(A)	integrate circuit(2K ROM)	U19,U14	2	
	FT24C032(A)	integrate circuit(32K ROM)	U15	1	
	EN25T80/SOP	Flash	U2	1	
	EN25T80/DIP	Flash	U7	1	
	OCP2030SA	integrate circuit	U21	1	
	TDA9886TS	integrate circuit	U25	1	

	AME1117-ADJ/T	integrate circuit	UP4	1	
	BM1084-33/TO-263	integrate circuit	UP3	1	
	AME1117AS18X/T	integrate circuit	UP1	1	
	AEM1117AS25X/T	integrate circuit	UP2	1	
	AEM1117AS33/T	integrate circuit	UP5	1	
	D1517P	integrate circuit	U27	1	
	SI9435	integrate circuit	Q13	1	
	CDT-9DT33C-40	integrate circuit	T1	1	

Part6: Debug Instruction

HK-HDMI-CI-SUNTV-V2.55 TV MainBoard Debug Guide

Trouble 1：black screen

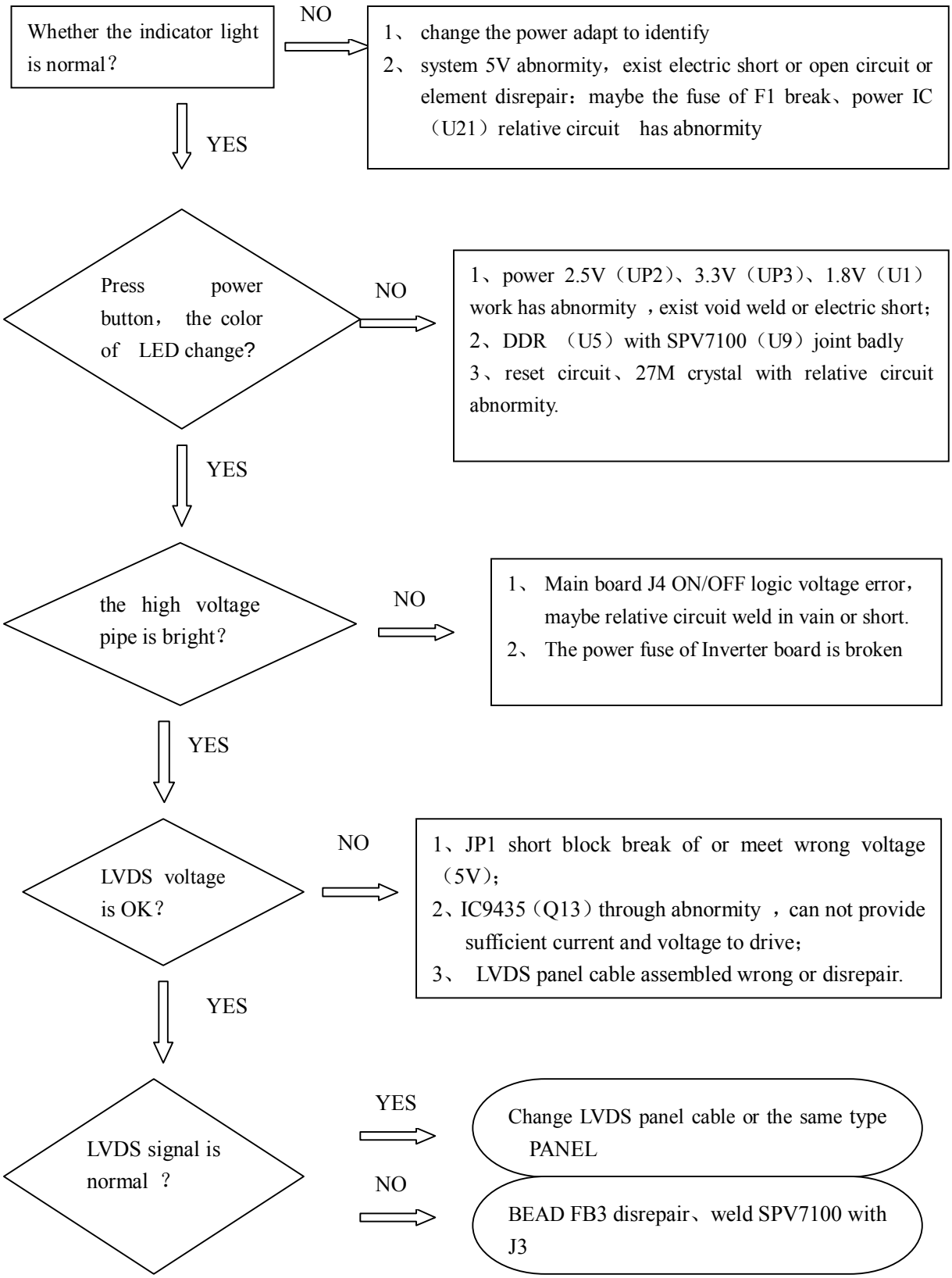

Trouble 2：have no DTV signal

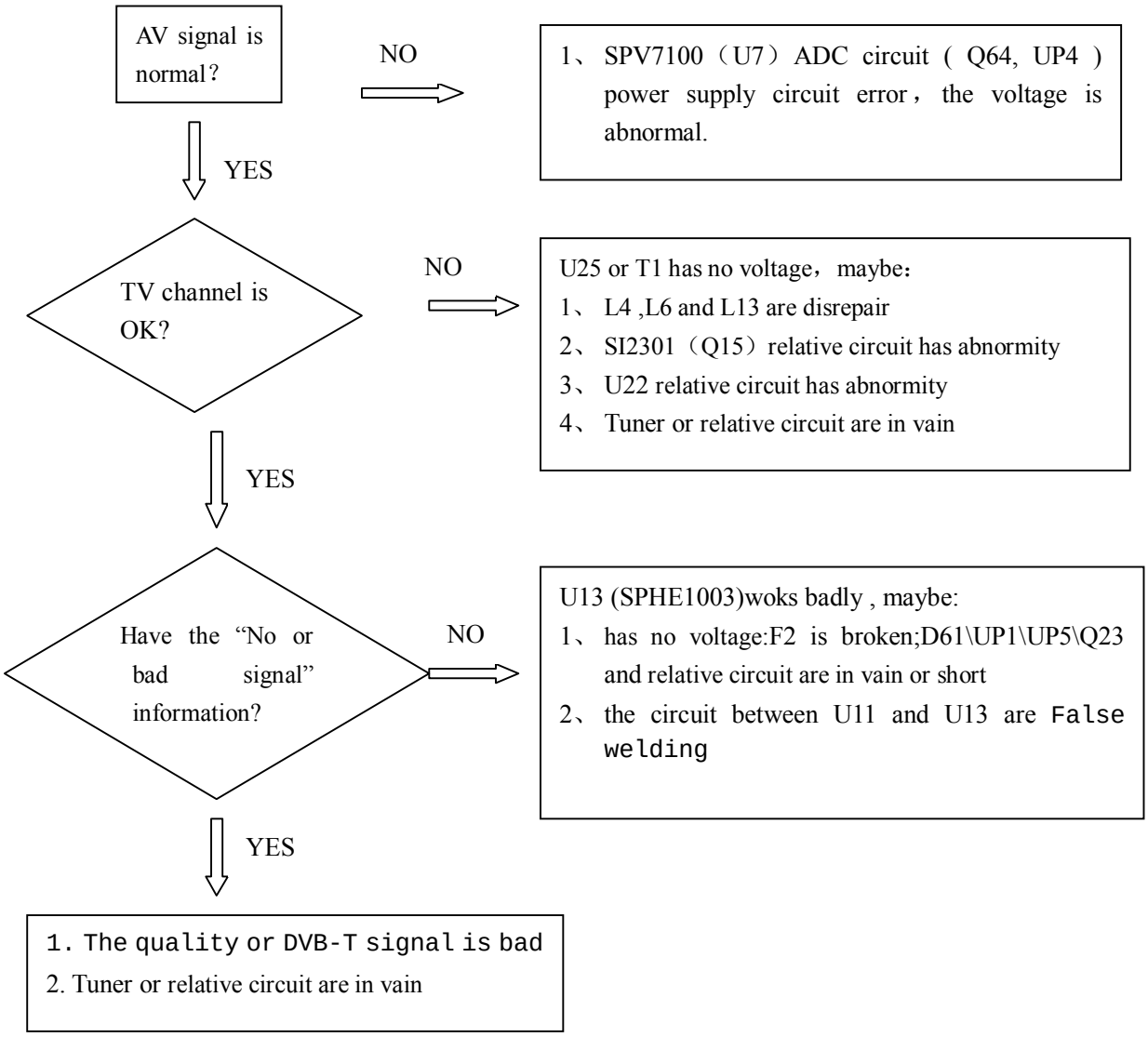

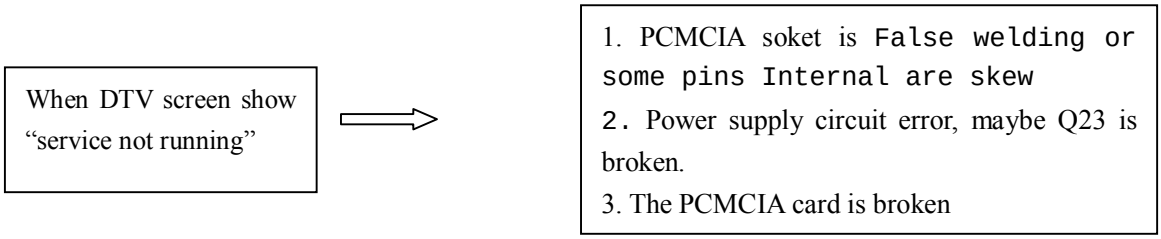

Trouble3：TV with no sound

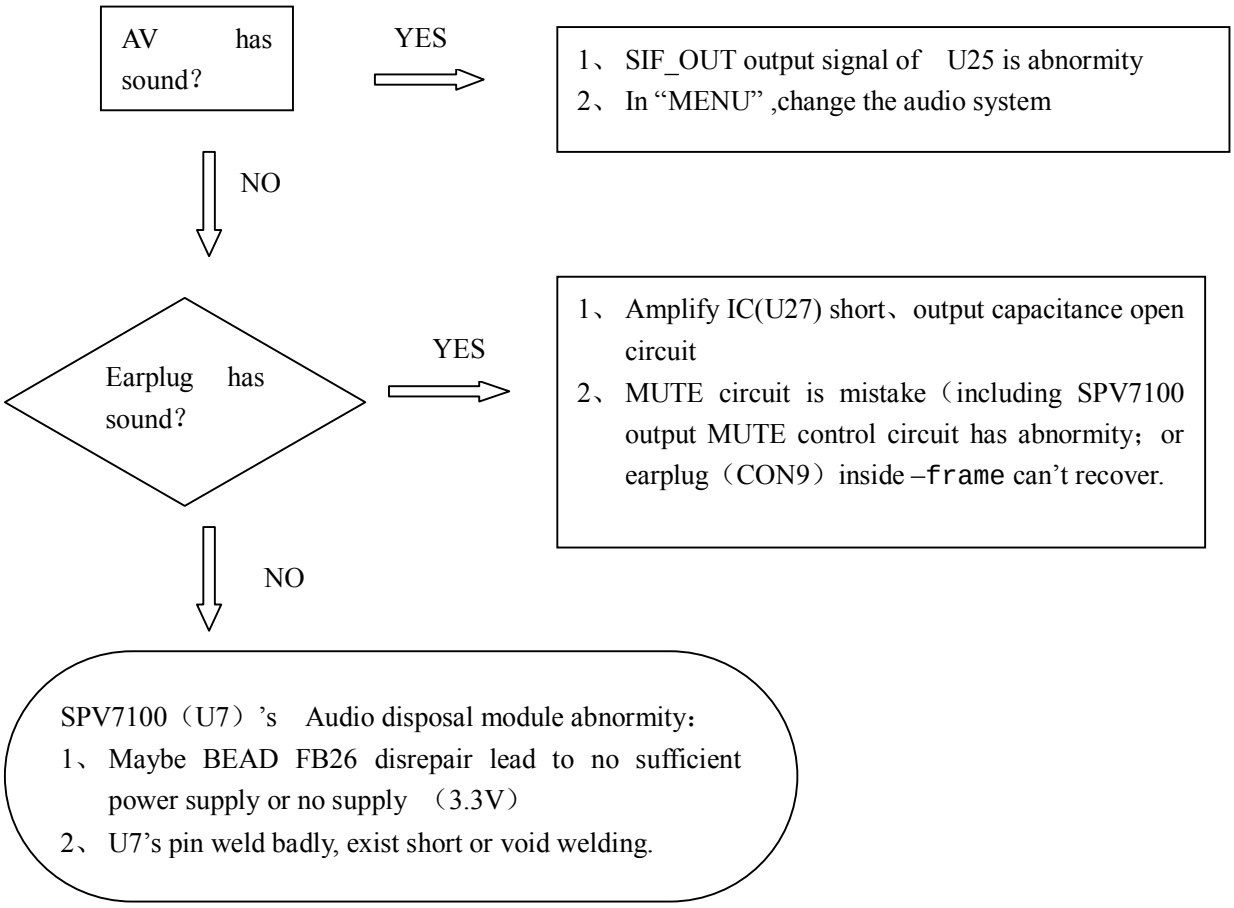

Trouble 4：HDMI is abnormal

1、 No picture appears: Check HDMI jack and cable connection
2、 Sounds with no picture: Is EDID OK? (In TV mode ,enter factory menu and then EDID RESET

DVD BLOCK DEBUG INSTRUCTION

1.DVD NO PICTURE

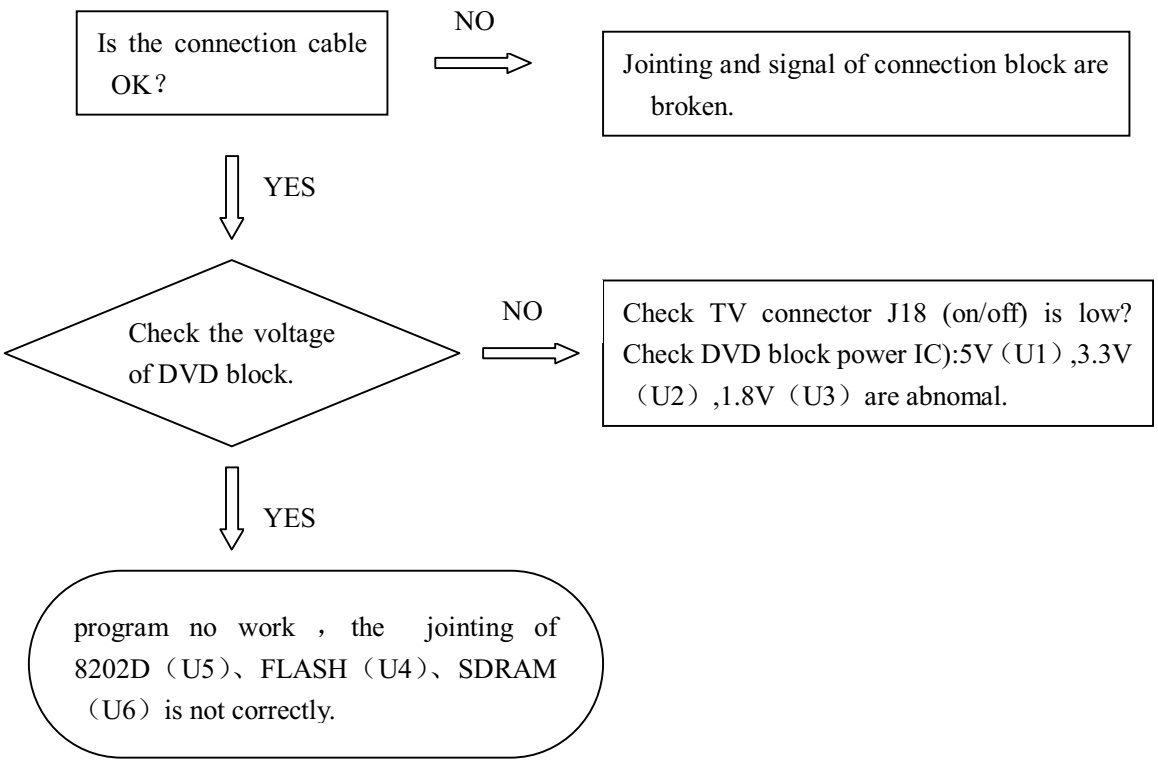

2. DVD MODULE CAN'T CLOSE

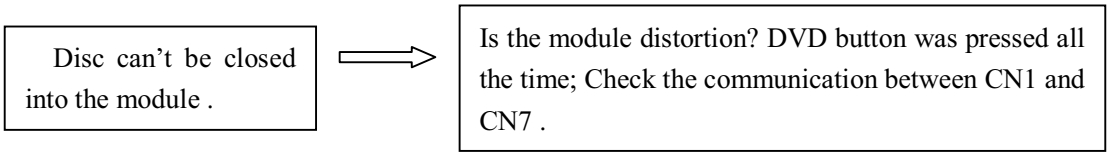

3. DISC CAN'T BE READ