Service
Service
Service

Service Manual

TABLE OF CONTENTS

Description	Page
Table of Contents	1
Important Safety Notice	2
Revision List	3
1. General Specification	4
2. Operating Instructions	5
2.1 The Use of Remote Control	5
2.2 To Use the Menus	6
2.3 How to Connect	15
2.4 Front Panel Control Knobs	17
3. Input/ Output Specification	19
4. Mechanical Instructions	21
5. Repair Flow Chart	24
6. PCB Layout	30
6.1 Main Board	30
6.2 Power Board	32
6.3 IR Board	35
6.4 KEY Board	35
7. Adjustment	36
7.1 WB Adjustment	36
7.2 FW Upgrade	37
8. Block Diagram	38
9. Schematic Diagram	40
9.1 Main Board	40
9.2 Power Board	54
9.3 IR Board	56
9.4 KEY Board	57
10. Exploded View	58
11. BOM List	60

SAFETY NOTICE

ANY PERSON ATTEMPTING TO SERVICE THIS CHASSIS MUST FAMILIARIZE HIMSELF WITH THE CHASSIS AND BE AWARE OF THE NECESSARY SAFETY PRECAUTIONS TO BE USED WHEN SERVICING ELECTRONIC EQUIPMENT CONTAINING HIGH VOLTAGES.

CAUTION: USE A SEPARATE ISOLATION TRANSFOMER FOR THIS UNIT WHEN SERVICING

Copyright © 2013 by TPV Corporation. All rights reserved. Specifications are subject to change without notice.
No part of this publication may be reproduced in any form or means, without the prior written permission of TPV Corporation. Otherwise we will reserve the right to investigate the legal responsibility.

Important Safety Notice

Proper service and repair is important to the safe, reliable operation of all AOC Company Equipment. The service procedures recommended by AOC and described in this service manual are effective methods of performing service operations. Some of these service operations require the use of tools specially designed for the purpose. The special tools should be used when and as recommended.

It is important to note that this manual contains various CAUTIONS and NOTICES which should be carefully read in order to minimize the risk of personal injury to service personnel. The possibility exists that improper service methods may damage the equipment. It is also important to understand that these CAUTIONS and NOTICES ARE NOT EXHAUSTIVE. AOC could not possibly know, evaluate and advise the service trade of all conceivable ways in which service might be done or of the possible hazardous consequences of each way. Consequently, AOC has not undertaken any such broad evaluation. Accordingly, a servicer who uses a service procedure or tool which is not recommended by AOC must first satisfy himself thoroughly that neither his safety nor the safe operation of the equipment will be jeopardized by the service method selected.
Hereafter throughout this manual, AOC Company will be referred to as AOC.

WARNING
Use of substitute replacement parts, which do not have the same, specified safety characteristics might create shock, fire, or other hazards.

Under no circumstances should the original design be modified or altered without written permission from AOC.
AOC assumes no liability, express or implied, arising out of any unauthorized modification of design.
Servicer assumes all liability.

FOR PRODUCTS CONTAINING LASER:
DANGER-Invisible laser radiations when open AVOID DIRECT EXPOSURE TO BEAM.
CAUTION-Use of controls or adjustments or performance of procedures other than those specified herein may result in hazardous radiation exposure.
CAUTION -The use of optical instruments with this product will increase eye hazard.

TO ENSURE THE CONTINUED RELIABILITY OF THIS PRODUCT, USE ONLY ORIGINAL MANUFACTURER'S REPLACEMENT PARTS, WHICH ARE LISTED WITH THEIR PART NUMBERS IN THE PARTS LIST SECTION OF THIS SERVICE MANUAL.
Take care during handling the LCD module with backlight unit
-Must mount the module using mounting holes arranged in four corners.
-Do not press on the panel, edge of the frame strongly or electric shock as this will result in damage to the screen.
-Do not scratch or press on the panel with any sharp objects, such as pencil or pen as this may result in damage to the panel.
-Protect the module from the ESD as it may damage the electronic circuit (C-MOS).
-Make certain that treatment person’s body is grounded through wristband.
-Do not leave the module in high temperature and in areas of high humidity for a long time.
-Avoid contact with water as it may a short circuit within the module.
-If the surface of panel becomes dirty, please wipe it off with a soft material. (Cleaning with a dirty or rough cloth may damage the panel.)

Revision List

Version	Release Date	Revision Instructions	Customer Model	TPV Model
A00	Dec. 30, 2013	Initial release	LE24D1440/20	E2CD2KNSGGB16NX
				E2CD9KNSGGB16NX

1. General Specification

Modelo	LE24D1440
Tamanho do painel	23.6” (16:9)
Resolução	1920 x 1080
Sistema TV	NTSC-M, PAL-M, PAL-N, SBTVD-T
Impedância de antena	75Ω
Fonte de energia	110-240V AC 50/60Hz
Consumo (máximo)	50W
Consumo em modo espera (standby, máximo)	< 1W
Auto-falante	3W x 2
Vídeo/Componente/Entrada de áudio	Componente traseira x1: SPDIF: 1 V(p-p), 75 ohm, sinc. negativo Y: 1V(p-p), 75 ohm, incluindo sinc. Pr: ±0,35V(p-p), 75 ohm Pb: ±0,35V(p-p), 75 ohm Entrada de áudio: RCA R/L para estéreo
Terminais HDMI	ENTRADA HDMI1: Traseiro x1 Conformidade HDCP Conformidade E-EDID Entrada HDMI2: Lateral x1 Conformidade HDCP Conformidade E-EDID Entrada ARC:
Terminais VGA	ENTRADA VGA: VGA Traseiro (D-SUB 15 Pin) Entrada x1 Conformidade E-EDID ENTRADA de áudio VGA: Entrada de áudio: Mini-tomada para estéreo (3,5Ø)
Saída para fone de ouvido	Lateral x1 Mini-entrada para estéreo (3,5Ø)
Entrada USB	Lateral x1 USB 2.0 (Tipo A)
Tamanho (W x H x D) (com base e suporte) (mm)	562.1 x 381.68 x 153
Tamanho (W x H x D) (sem base e suporte) (mm)	562.1 x 340 x 52
Peso	3.84 Kg

2. Operating Instructions

2.1 The Use of Remote Control

Uso do Controle Remoto

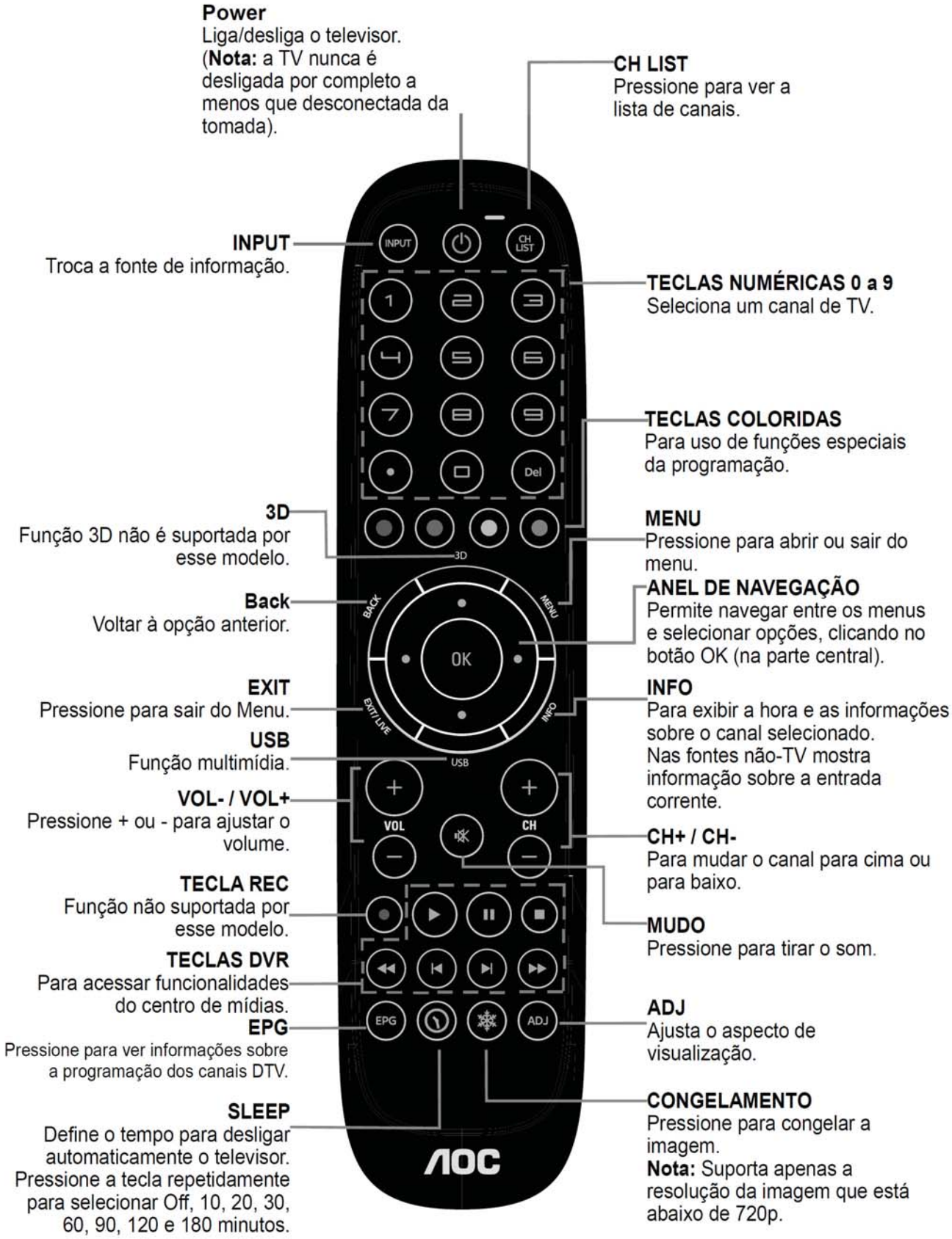

2.2 To Use the Menus

Utilização dos Menus – Navegação

1. Pressione o botão **MENU** para exibir, na tela da TV, os menus. Serão exibidos na sequência os menus: **Imagem**, **Som**, **TV**, **Configuração** e **Parental**.
2. Pressione a tecla de navegação direita ou esquerda para se deslocar entre as indicações dos menus e selecionar um dos menus.
3. Selecionado o menu desejado, pressione o botão central (OK) para confirmar a seleção e acessar os submenus correspondentes desse menu selecionado.
4. Com o botão de navegação superior e inferior percorra os submenus e pare no desejado; pressione o botão central (OK) para acessar as opções desse submenu.
5. Para sair do menu, pressione o botão **MENU** ou **EXIT**.

PRIMEIROS AJUSTES
BEM-VINDO
INSTALAÇÃO INICIAL

É a primeira tela exibida após ligar o aparelho. Ela permite ao usuário iniciar a instalação dos canais antes de acessar outras funções da TV. O usuário pode escolher entre as fontes de sinal de TV: **AR** ou **Cabo**.
Você também pode sair pressionando a tecla **EXIT** para sair da instalação.

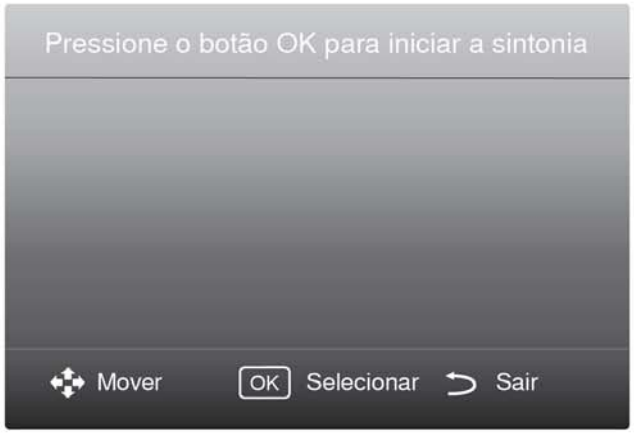

Bem-vindo à configuração inicial

Selecione o idioma

Selecionar país

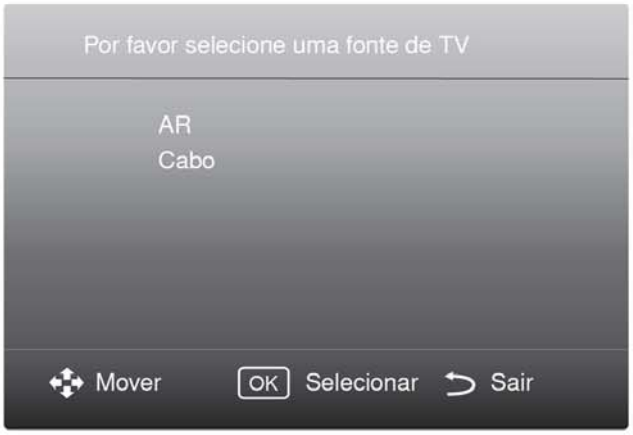

Selecione o modo sintonizador

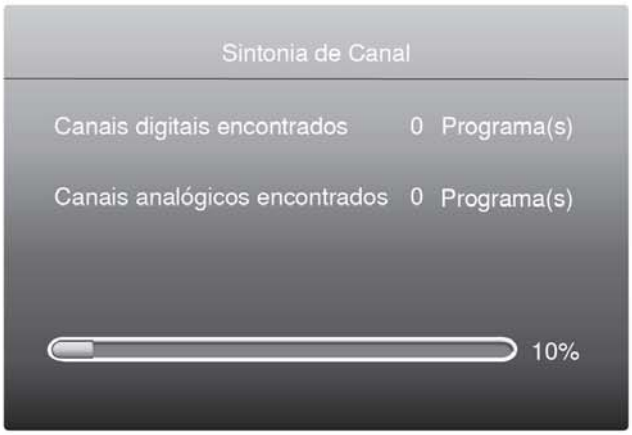

Sintonizando Canal

Menu Principal

Para acessar os menus da TV, pressione a tecla **MENU**. Essa tela permite que o usuário escolha entre os menus: Menus **Imagem**, **Som**, **TV**, **Configuração** e **Parental**.

MENU IMAGEM

Fornece vários submenus para ajustes de vídeo. Pressione **MENU** e selecione o menu **<Imagem>**. Pressione o botão central (OK) para acessar os submenus.
Para percorrer os submenus na vertical, use as teclas de navegação para cima e para baixo.
Nota: Os ajustes de vídeo somente podem ser feitos no modo **Pessoal**.

- **Modo de Imagem**: Há sete opções selecionáveis pelo usuário para estilo de imagem – **Pessoal**, **Nítido**, **Futebol**, **Padrão**, **Filme**, **Foto** e **Economia de energia**.
- **Restaurar estilo**: Reinicia estilo para as configurações padrão.
- **Luz de Fundo**: Ajusta a intensidade da luminosidade da imagem. O ajuste é de 0 ~ 100.
- **Cor**: Ajusta a intensidade da cor do vídeo. O ajuste é de 0 ~ 100.
- **Nitidez**: Ajusta a nitidez do vídeo. O ajuste de nitidez é de 0 ~ 100.
- **Redução de ruído**: Filtra e reduz o ruído no vídeo. Há quatro opções selecionáveis pelo usuário para redução de ruído – **Desligado**, **Mínimo**, **Médio** e **Máximo**.
- **Redução de art. MPEG**: Suaviza as transições e borrões na imagem digital.

- **Imagem Plus**: Ajusta a qualidade de pixels para produzir produtos de alta definição de imagem. Pressione para acessar o menu **<Imagem Plus>**. Esta opção permite que o usuário faça ajustes de configuração em: **Nitidez avançada**, **Contraste dinâmico**, **Luz de fundo dinâmica** e **Melhorar a Cor**.
  - **Nitidez avançada**: Ativa clareza de imagem excelente.

- **Contraste dinâmico**: Dinamicamente melhora os detalhes em várias áreas tonais da imagem - **Desligado**, **Mínimo**, **Médio** e **Máximo**.
- **Luz de fundo dinâmica**: Ajusta o brilho da luz de fundo de TV para se adequar às condições de iluminação. Há quatro opções selecionáveis pelo usuário para luz de fundo dinâmica – **Desligado**, **Padrão**, **Melhor Consumo** e **Melhor imagem**.
- **Melhorar a Cor**: Torna as cores mais luminosas e ricas – **Desligado**, **Mínimo**, **Médio** e **Máximo**.

- **Avançada**: Pressione para acessar o menu **<Avançada>**. Esta opção permite que o usuário faça ajustes de configuração em: **Gama**, **Temperatura de cor**, **Temperatura de cor personalizada**, **Contraste de vídeo**, **Brilho** e **Tonalidade**.
  - **Gama**: Torna as cores mais luminosas e ricas. O ajuste é de -4 ~ 4.
  - **Temperatura de cor**: Ajusta o tom da cor de vídeo - **Frio**, **Normal, Quente** e **Personalizado**.
    - **Temperatura de cor personalizada**: Ajusta os valores de vermelho, verde e azul para produzir sua própria cor temperaure pré definida - **R**, **G**, **B** (Isto só está disponível quando a **Temperatura de cor**: **Personalizada** é selecionada)
  - **Contraste de Vídeo**: Ajusta a luz de fundo, aumentando a diferença de intensidade entre as áreas de luz de fundo claras e escuras. O ajuste é de 0 ~ 100.
  - **Brilho**: Ajusta do brilho do vídeo. O ajuste é de 0 ~ 100.
  - **Tonalidade**: Ajusta a saturação de cores do vídeo. O ajuste é de 0 ~ 100.
- **Modo HDMI:** Selecionar o modo HDMI a partir do **Auto**, **Gráfico** ou **Vídeo**.

- **Formato e bordas**: Pressione para acessar o menu e **<Formato e bordas>**. Esta opção permite que o usuário faça ajustes de configuração em: **Formato de imagem**, e **Deslocamento de imagem**.
  - **Formato de imagem**: Altera o formato da imagem para coincidir com a fonte de vídeo. Ha seis opções selecionáveis pelo usuário – **Zoom automático**, **Super zoom**, **Expandir Imagem 16:9, Wide Screen**, **Sem escala** e **4:3**.
  - **Deslocamento de imagem**: Ajusta a posição da imagem para diferentes formatos de imagem.

MENU SOM

Pressione **MENU** e selecione com a tecla de navegação direita o menu **<Som>**. Pressione OK para acessar os sub-menus.

- **Estilo de som**: Há seis opções selecionáveis para modo de som – **Pessoal**, **Original**, **Filme**, **Música**, **Jogos** e **Notícias**.
- **Restaurar estilo**: Restura às predefinições de som padrão.
- **Graves**: O ajuste de grave é de -8 ~ 8.
- **Agudos**: Ajusta os tons de alta frequência. O ajuste é de -8 ~ 8.
- **Balanço:** Alterna a TV para o melhor modo de som surround. A faixa de ajuste do balanço é de - 50 ~ 0 e 0 ~ 50.
- **Modo Surround**: Habilita o som surround digital para melhorar a sua experiência de áudio.
- **Avançada**: Pressione para acessar o menu **<Avançada**>. Esta opção permite que o usuário faça ajustes de configuração em: **Nivelamento automático de volume**, **SimpleLink**, **Som Plus**, **HDMI 2- ARC**, **Atraso na saída de áudio** e **Compensação na saída de áudio**.
  - **Nivelamento automático de volume**: Permite o nivelamento automático para reduzir a mudanças bruscas de volume ao mudar de canal.
  - **SimpleLink**: O usuário pode optar por ouvir o áudio da TV a partir de qualquer alto falante ou amplificador externo de TV que está conectado à TV – **Alto Falante de TV** ou **AMP**. Esta função só está disponível quando a função **SimpleLink** em **<Configuração>** está ligada.
  - **Som Plus**: Melhorar a clareza do som.
  - **HDMI 2-ARC**: Permite a saída de áudio do dispositivo ARC ligado ao conector HDMI 2.
  - **Atraso na saída de áudio**: Sincroniza automaticamente a imagem da TV para o áudio de um home theater conectado.
  - **Compensação na saída de áudio**: Ajusta a configuração de atraso de saída de áudio. O ajuste é de 0 ~ 12.

MENU TV

Pressione **MENU** e selecione o menu **<TV>**. Pressione OK para acessar os sub-menus.

- **Conexão de antena**: Seleciona a fonte de entrada de **AR** ou **Cabo**.
- **Atualizar canais**: Selecione para começar a varredura de novo canal.
- **Reinstalar Canais**: Pressione para reinstalar os canais (Haverá caixas de diálogo para que você selecione o seu país e o modo de sintonia).
- **Busca Manual de Canais**: Pressione para pesquisar canal.
- **Configurações de Ginga**: Pressione para acessar o menu **<Configurações de Ginga>**. Habilita a exibição do conteúdo Ginga se a emissora de TV transmitir esse conteúdo. Se o Ginga estiver disponível, um ícone aparecerá na tela. Para acessá-lo pressione a tecla indicada pelo aplicativo. Se você deseja desligar este recurso, entre no sub-menu de **Configurações Ginga** e selecione **Ginga**: **Desligado**.
  - **Ginga**: Ginga é o conteúdo digital transmitido pela emissora de TV. Tanto **Auto Aplicação de Ginga** e **Lista de Aplicações** estarão disponíveis selecionando **Ligado**.
  - **Auto Aplicação de Ginga**: Selecionando **Ligado**, a TV baixará transmissão de vídeo e executará seu aplicativo Ginga automaticamente se a transmissão de vídeo tiver conteúdo Ginga.
  - **Lista de Aplicações**: O usuário pode executar o aplicativo Ginga manualmente desta lista quando **Auto Aplicação de Ginga** estiver **Desligado**.

MENU CONFIGURAÇÃO

Pressione **MENU** e selecione com a tecla de navegação direita o menu **<Configuração>**. Pressione o botão central (OK) para acessar o submenu deste menus.

- **Linguagem do menu**: Selecione o idioma do menu – **English**, **Español** ou **Português**.

- **Idioma áudio**: Quando canais de TV transmitem em vários idiomas, o usuário pode selecionar o idioma desejado. Apenas disponível quando o sinal recebido é DTV.
- **Áudio alternativo**: Selecione o modo de áudio. Somente para uso da TV Analógica.
- **Configuração de Legenda**: Pressione para acessar o menu **<Configuração de Legenda>**. Esta opção permite que o usuário faça ajustes em: **Closed caption** e **Serviço de legenda**.
  - **Closed caption**: Defina o modo do Close Caption como **Ligado**, **Desligado** ou **Ativo com Som.**
  - **Serviço de legenda**: Defina o modo closed caption de **CC1** ~ **CC8** (quando o sinal recebido é ATV, **CC5**, **CC6**, **CC7** e **CC8** aparecerá como **TT1**, **TT2**, **TT3** e **TT4** no menu **<Configuração>**).
- **Clock**: Pressione para acessar o menu <Clock>. Esta opção permite que o usuário configure o relógio da TV em: **Auto modo de relógio**, **Fuso horário**, **Data** e **Hora**.
  - **Auto modo de relógio**: Escolha **Manual** para configurar o relógio manualmente. Se escolher **Automático**, ele será automaticamente sincronizado à Hora de Coordenada Universal (UTC) uma vez que a TV receber transmissões de UTC.
  - **Fuso horário**: Selecione o fuso horário do seu país. O ajuste é de -2 ~ 2.
  - **Data**: Ajustar o calendário na TV.
  - **Hora**: Ajusta a hora na TV.
- **Sleep Timer**: Para desligar a TV depois de um período de tempo pré determinado. Selecione um valor entre desligado ~ 180 minutos. Função Sleep é desligado quando ajustado como Zero.
- **Auto Desligar**: Desliga a TV automaticamente depois de um período de tempo pré determinado, quando não houver nenhum sinal. Selecione um valor entre desligado ~ 240 minutos. Auto desligar é desligado quando ajustado para zero.
- **Local**: Escolhe o modo de local para a TV. **Loja** ou **Início**.

- **SimpleLink**: Pressione para acessar o menu **<SimpleLink>**. Esta opção permite que o usuário configure funções relacionadas a HDMI-CEC em: **SimpleLink**, **Controle remoto SimpleLink** e **Desligamento automático dos dispositivos**.
  - **SimpleLink**: Liga/desliga as funções CEC.
  - **Controle remoto SimpleLink**: Permite que o usuário opere dispositivos HDMI-CEC (que estão conectados à TV) usando o controle remoto da TV.
  - **Desligamento automático dos dispositivos**: Desliga automaticamente dispositivos HDMI-CEC quando a TV é desligada.
- **Colocação de TV**: Seleciona **Montado na parede** ou **Em um suporte de TV** como o método para colocar a sua TV.
- **Ajuste automático**: Esta função irá ajustar automaticamente a posição da imagem na tela quando a **Fonte** está no modo **PC**.
- **Versão do software**: Exibe a versão do software da TV.
- **Configurações de fábrica**: Redefine **Imagem** e **Som** para configurações padrão. Todas as configurações de imagem e som serão apagados.
- **Reinstalar TV**: Pressione para reiniciar a TV.

MENU PAIS

Esta interface oferece recursos para limitar o acesso das crianças aos conteúdos de TV inadequados.
Pressione **MENU** e selecione com a tecla de navegação direita o menu **<Parental>**. Pressione o botão central (OK) para acessar os submenus.

- **Bloqueio por classificação etária:** Esta função permite que o usuário defina a TV para só mostrar os programas apropriados para crianças. Há seis opções selecionáveis pelo usuario para bloqueio de classificação etária – **Livre**, **10 Anos**, **12 Anos**, **14 Anos**, **16 Anos**, **18 Anos**.
- **Configurar o código:** Pressione para alterar a senha de controle dos pais. A senha padrão de fábrica: 0000.

MENU USB

No modo USB, é possível inserir imagens, música, vídeo e através da porta USB do pendrive. Isto transforma a TV em um reprodutor de MP3, visualizador de imagens ou reprodutor de vídeo, sem a necessidade de periféricos como câmeras, DVD , etc.

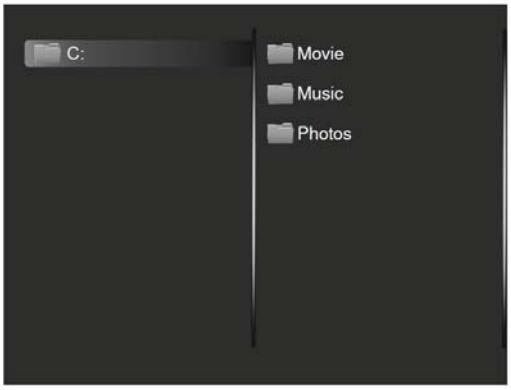

Pressione **USB** no controle remoto da TV para acessar o centro de USB, e selecione o arquivo com a tecla de navegação. Pressione o botão central (OK) para acessar o arquivo de mídia.
Nota: Esta porta USB não suporta discos rígidos externos.

2.3 How to Connect

Conexão de Equipamento

Consultar a página 18 para a localização das entradas dos painéis laterais e traseiros da TV.

Conectando a Antena Digital:

1. Desligar a TV.
2. Conecte o cabo coaxial de sua antena no conector da antena de sua TV.

Conectando o DVD Player

Utilizando HDMI

Os DVD Players mais avançados possuem uma interface digital HDMI (Interface Multimídia de Alta Definição), a qual deve ser conectado a entrada HDMI da sua TV LCD/LED para melhores resultados.

1. Desligar a TV.
2. Conecte o cabo HDMI do seu DVD a entrada HDMI de sua TV.

NOTA: Consulte o manual do seu DVD Player para mais informações sobre os requerimentos de saída de vídeo do produto.

Utilizando Vídeo Componente

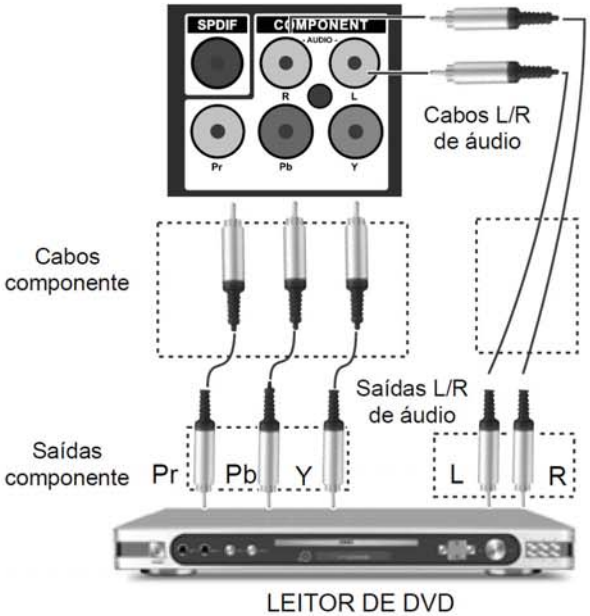

1. Desligue a TV e o DVD player.
2. Conecte os cabos Pr (vermelho), Pb (azul) e Y (verde) nas cores correspondentes.
3. Utilizando os cabos de áudio (vermelho e branco), conecte-os às saídas de áudio do DVD Player.

Utilizando AV

1. Desligue a TV e o DVD Player.
2. Conecte o cabo de Vídeo (amarelo) aos terminais correspondentes.
3. Utilize os cabos de Áudio (vermelho e branco) para conectar às saídas de áudio do DVD Player.

Conexões de sua Câmera ao AV

1. Desligue a TV e a Câmera (Fotográfica Digital ou Filmadora).
2. Conecte o cabo de Vídeo (amarelo) aos terminais correspondentes.
3. Utilizando os cabos de áudio (vermelho e branco), faça a conexão com seus correspondentes.

Conexões de seu Videocassete ao AV

VÍDEO CASSETE

1. Desligue a TV e o videocassete.
2. Conecte o cabo de Vídeo (amarelo) aos terminais correspondentes.
3. Utilizando os cabos de áudio (vermelho e branco), faça a conexão com seus correspondentes.

Conexões do Fone de Ouvido

Conecte o plugue do cabo do fone de ouvido na entrada lateral correspondente.

Conexões de um Computador

1. Desligue a TV e o Computador.
2. Conecte o cabo de 15 pinos D-Sub RGB na entrada correspondente.
3. Conecte o cabo de saída de áudio do computador na entrada correspondente.

NOTA: Consulte o guia do usuário do cartão gráfico ou do PC para informações adicionais na colocação do modo de espera e os requisitos de saída do produto.

2.4 Front Panel Control Knobs

Guia de Conexões Periféricas

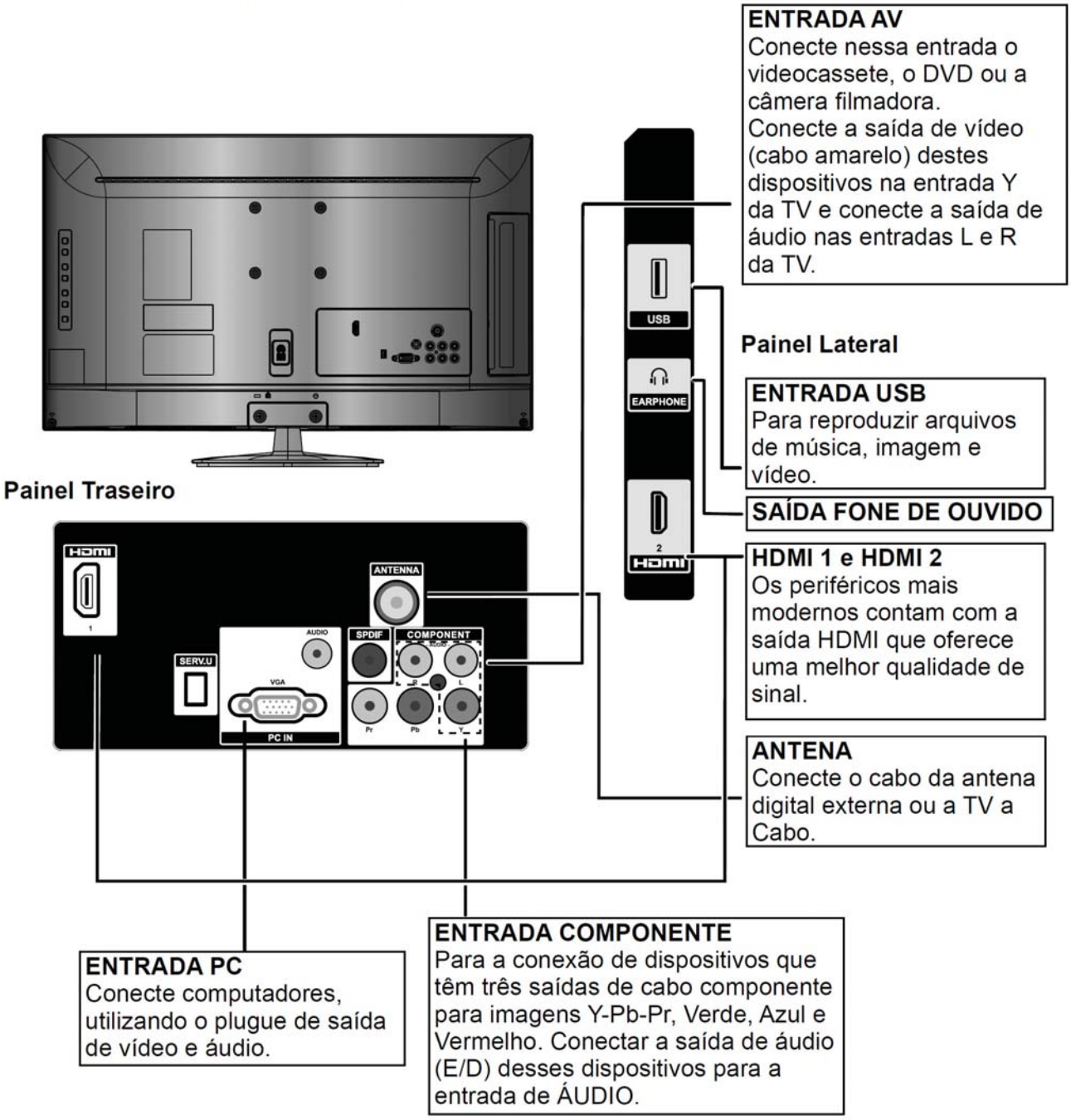

NOTAS: Uma vez que seu equipamento estiver corretamente conectado na TV, utilize o botão **INPUT** do controle remoto para selecionar a entrada adequada. Sempre desligue a TV da tomada para conectar os equipamentos nas conexões periféricas.

Como Usar o Painel de Controle Lateral

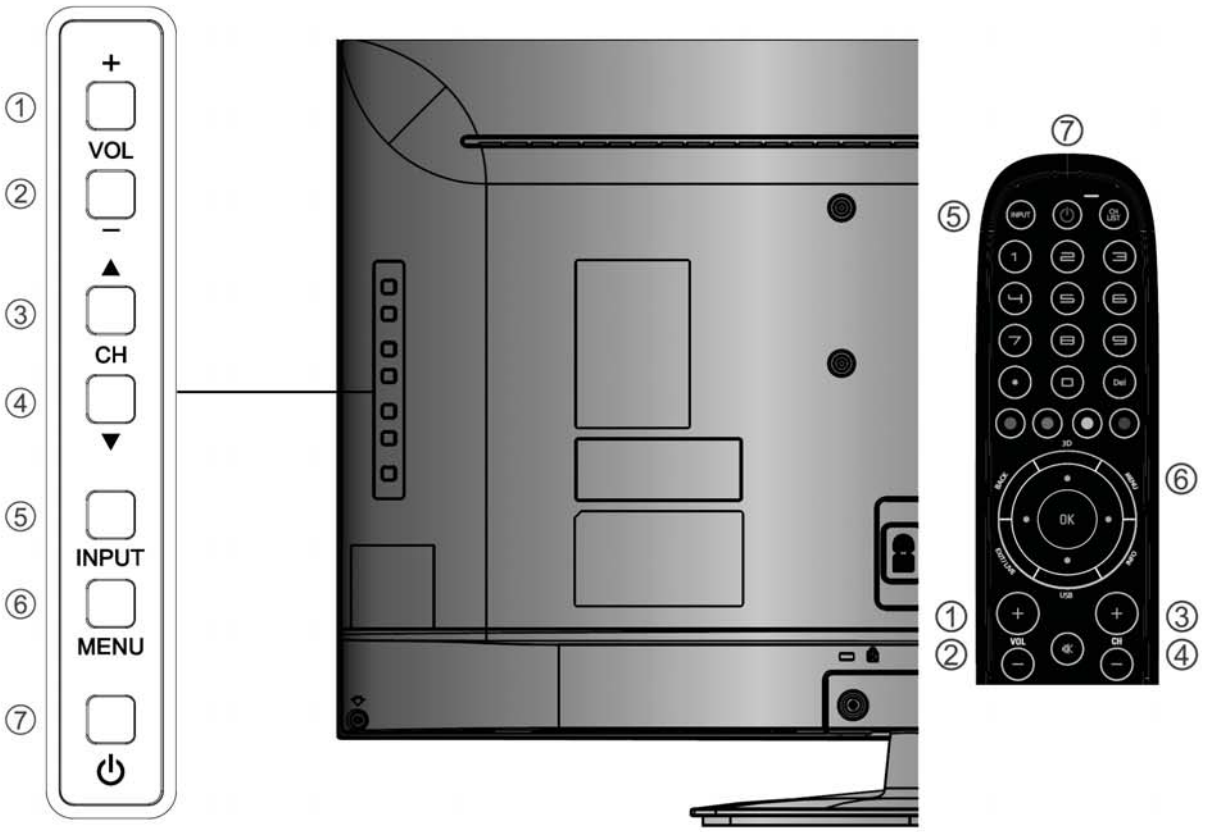

1. VOL +	VOL+: Pressione para aumentar o volume.
2. VOL -	VOL–: Pressione para diminuir o volume.
3. CH ▲	CH▲ : Pressione para selecionar o próximo canal. Para procurar rapidamente através dos canais, mantenha pressionado o botão.
4. CH ▼	CH▼ : Pressione para selecionar o canal anterior. Para procurar rapidamente através dos canais, mantenha pressionado o botão.
5. INPUT	Pressione para selecionar a fonte de entrada.
6. MENU	Tecla de Menu: Pressione para acessar as funcionalidades do menu. Pressione mais uma vez para sair dessa opção.
7. Power	Pressione para ligar / desligar (em espera) o aparelho.

3. Input / Output Specification

D-Sub, HDMI Digital Connector Pin Assignments

D-Sub		HDMI1		HDMI2	
PIN No.	**Signal**	**PIN No.**	**Signal**	**PIN No.**	**Signal**
1	Red Video	1	TMDS Data2+	1	TMDS Data2+
2	Green Video	2	TMDS Data2 shield	2	TMDSData2 shield
3	Blue Video	3	TDMS Data2-	3	TDMS Data2-
4	TXD	4	TMDS Data1+	4	TMDS Data1+
5	Ground	5	TMDS Data1 shield	5	TMDS Data1 shield
6	Red Ground	6	TMDS Data1-	6	TMDS Data1-
7	Green Ground	7	TMDS Data0+	7	TMDS Data0+
8	Blue Ground	8	TMDS Data0 shield	8	TMDS Data0 shield
9	No Pin!	9	TMDS Data0-	9	TMDS Data0-
10	Sync Ground	10	TMDS Clock+	10	TMDS Clock+
11	RXD	11	TMDS Clock Shield	11	TMDS Clock Shield
12	Serial Data for DDC	12	TMDS Clock-	12	TMDS Clock-
13	H-sync	13	CEC	13	CEC
14	V-sync	14	NC	14	NC
15	Serial Clock for DDC	15	SCL	15	SCL
		16	SDA	16	SDA
		17	DDC/CEC Ground	17	DDC/CEC Ground
		18	+5V Power	18	+5V Power
		19	Hot Plug Detect	19	Hot Plug Detect
				20	SHLD_GND1
				21	SHLD_GND2

HDMI Timing

Resolution	WXGA Panel	FHD Panel	Horizontal		Vertical		Nominal Pixel Clock(MHz)
	HDMI-DVI	HDMI-DVI	Nominal Frequency (KHz)	Sync Polarity	Nominal Freq. (Hz)	Sync Polarity	
640x480@60Hz	●	●	31.469	-	59.94	-	25.175
720x400@70Hz	●	●	31.469	-	70.087	+	28.322
800x600@60Hz	●	●	37.879	+	60.317	+	40
1024x768@60Hz	●	●	48.363	-	60.004	-	65
1280x720@60Hz	●	●	45	+	60	+	74.25
1280x768@60Hz	●	●	47.396 /47.776	+ /-	59.995 /59.87	- /+	68.25 /79.5
1280x1024@60Hz	●	●	63.981	+	60.02	+	108
1360x768@60Hz	●		47.71	+	59.799	+	85.5
1440x900@60Hz		●	55.935 /55.469	- /+	59.887 /59.901	+ /-	106.5 /88.75
1680x1050@60Hz		●	64.674 /65.29	+ /-	59.883 /59.954	- /+	119 /146.25
1920x1080@60Hz		●	66.587	+	59.934	-	138.5
720x480i 59.94/60Hz	●	●	15.75		60		27.03

720x480P 59.94/60Hz	●	●	31.54		60		27.03
720P 59.94/60Hz	●	●	45		60		74.25
1080i 59.94/ 60Hz	●	●	33.75		60		74.25
1080P 24Hz	●	●	67.5		24		59.4
1080P 60Hz	●	●	67.5	+	60	+	148.5

PC timing table(For RGB input)

Resolution	WXGA Panel	Full HD Panel	Horizontal		Vertical		Nominal Pixel Clock(MHz)
	VGA	VGA	Nominal Frequency (KHz)	Sync Polarity	Nominal Freq.(Hz)	Sync Polarity	
640x480@60Hz	●	●	31.469	-	59.94	-	25.175
640x480@72Hz	●	●	37.861	-	72.809	-	31.5
640x480@75Hz	●	●	37.5	-	75	-	31.5
720x400@70Hz	●	●	31.469	-	70.087	+	28.322
800x600@56Hz	●	●	35.156	+	56.25	+	36
800x600@60Hz	●	●	37.879	+	60.317	+	40
800x600@72Hz	●	●	48.077	+	72.188	+	50
800x600@75Hz	●	●	46.875	+	75	+	49.5
1024x768@60Hz	●	●	48.363	-	60.004	-	65
1024x768@70Hz	●	●	56.476	-	70.069	-	75
1024x768@75Hz	●	●	60.023	+	75.029	+	78.75
1280x720@60Hz	●	●	45	+	60	+	74.25
1280x768@60Hz	●	●	47.396 /47.776	+ /-	59.995 /59.87	- /+	68.25 /79.5
1280x1024@60Hz	●	●	63.981	+	60.02	+	108
1360x768@60Hz	●		47.71	+	59.799	+	85.5
1440x900@60Hz		●	55.935 /55.469	- /+	59.887 /59.901	+ /-	106.5 /88.75
1680x1050@60Hz		●	64.674 /65.29	+ /-	59.883 /59.954	- /+	119 /146.25
1920x1080@60Hz		●	66.587	+	59.934	-	138.5

4. Mechanical Instructions

1. Remove the screws to remove BASE.

2. Remove the screws to remove REAR COVER.

3. Disconnect the PINS marked in yellow .Remove the screws marked in red to remove MAIN BOARD,POWER BOARD,SPEAKER,BKT_IO_SIDE.

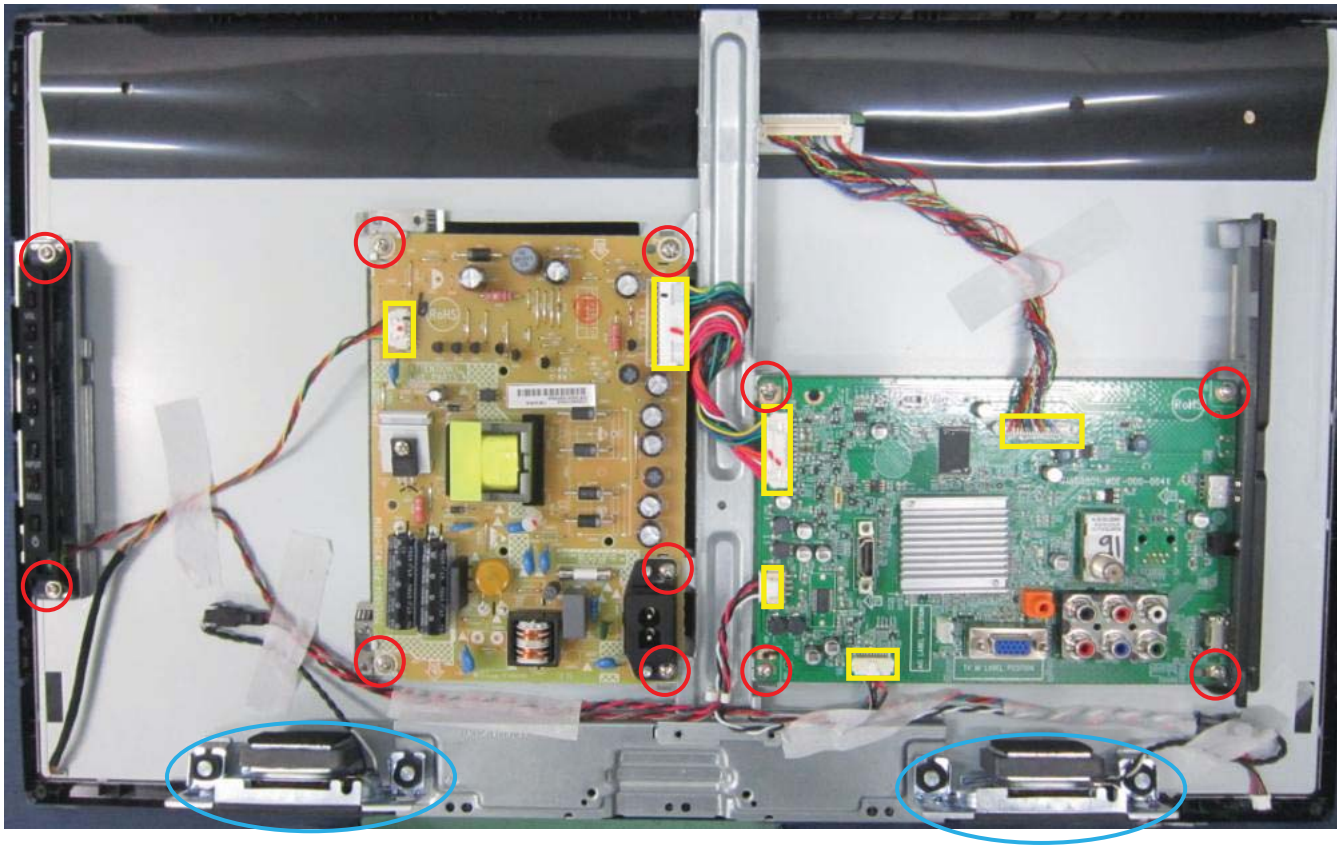

4. Remove the screws to remove BKT_ KEY, BKT_SPEAKER, BKT_ HOLDER, LVDS.

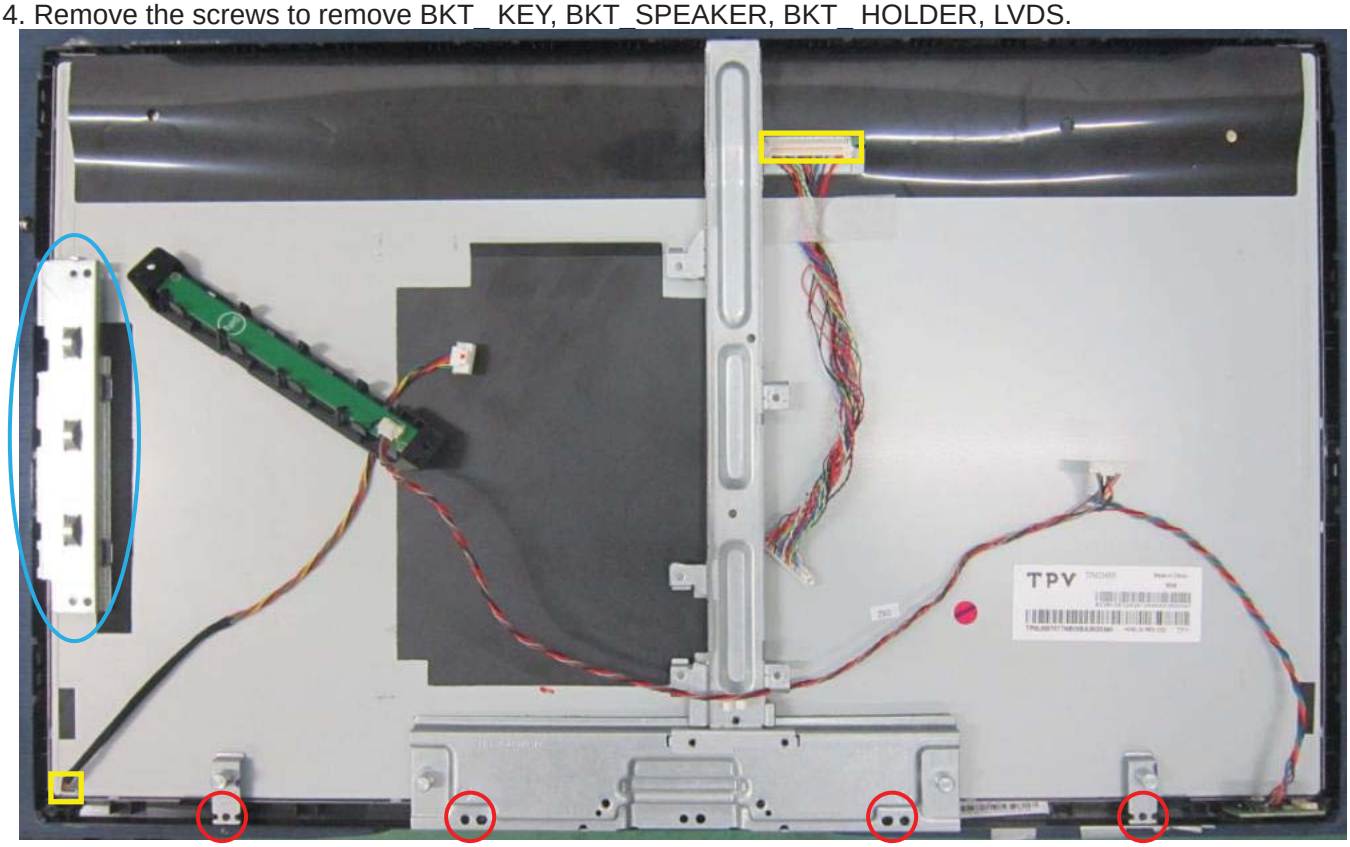

5. Remove the panel.

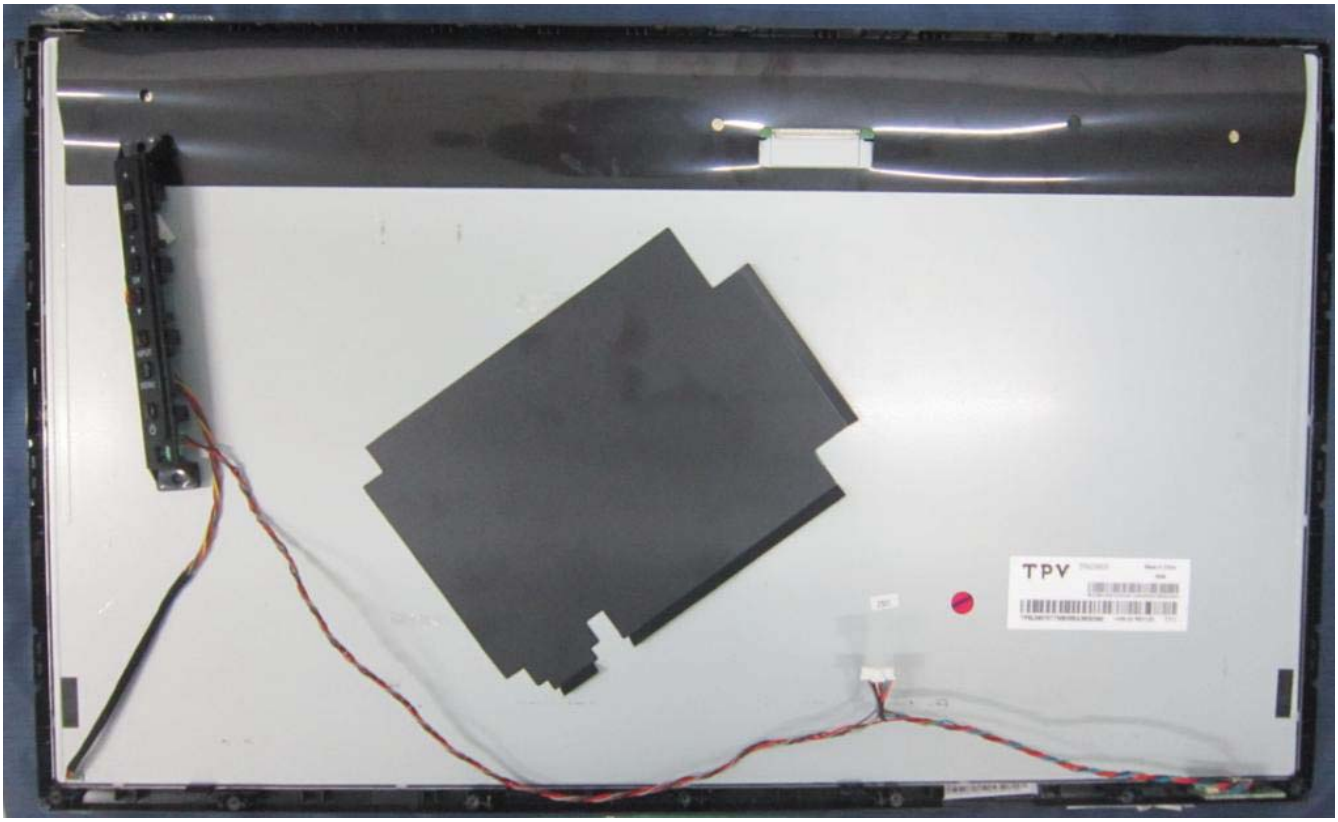

6. Bezel.

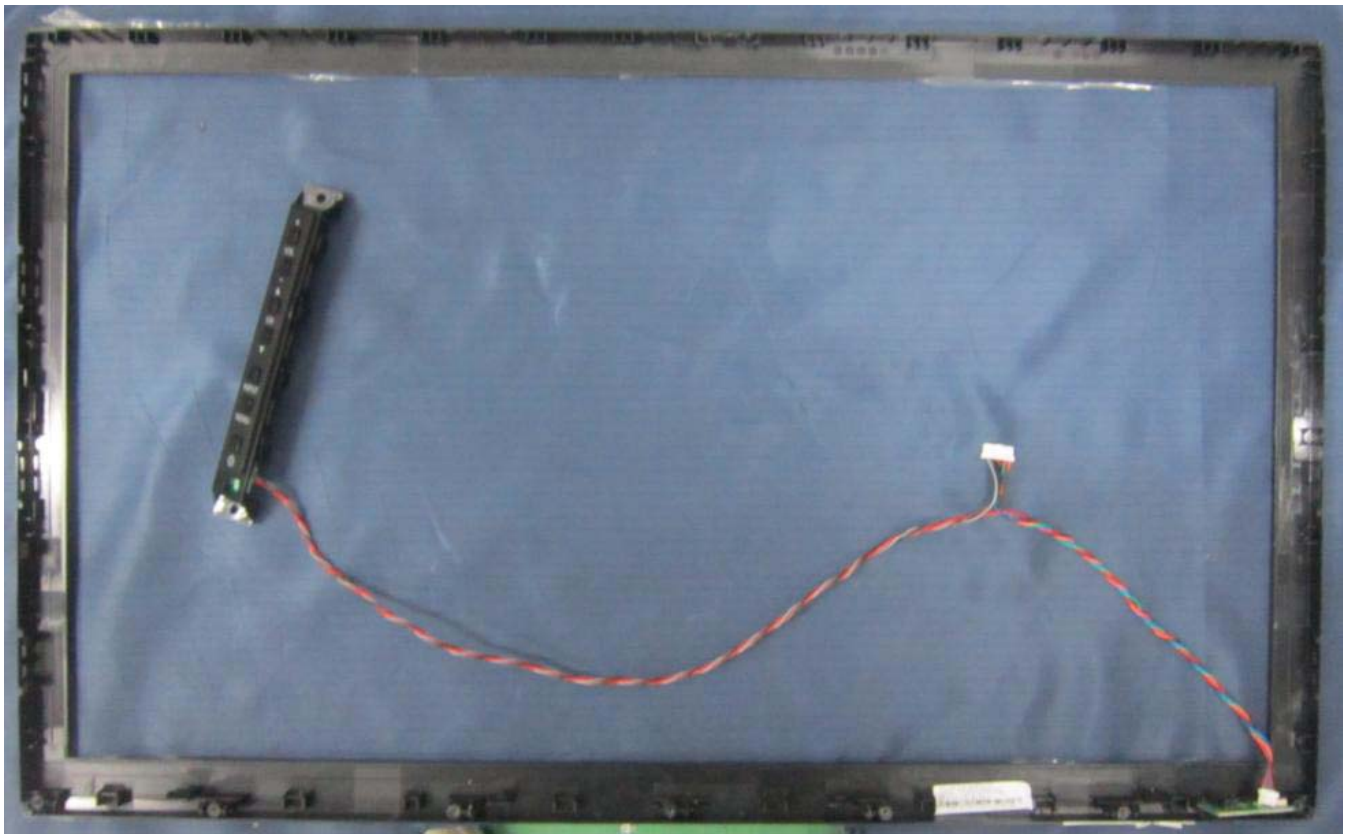

5. Repair Flow Chart

1. No power

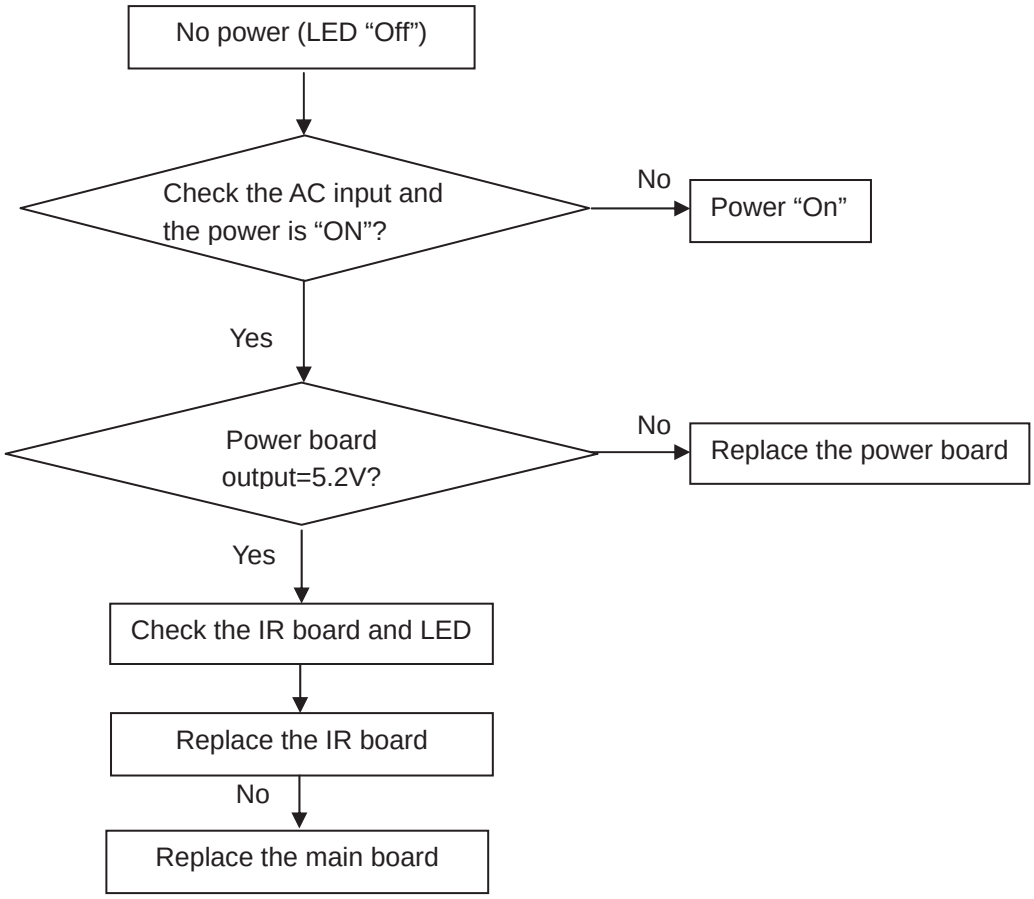

2. Can’t start

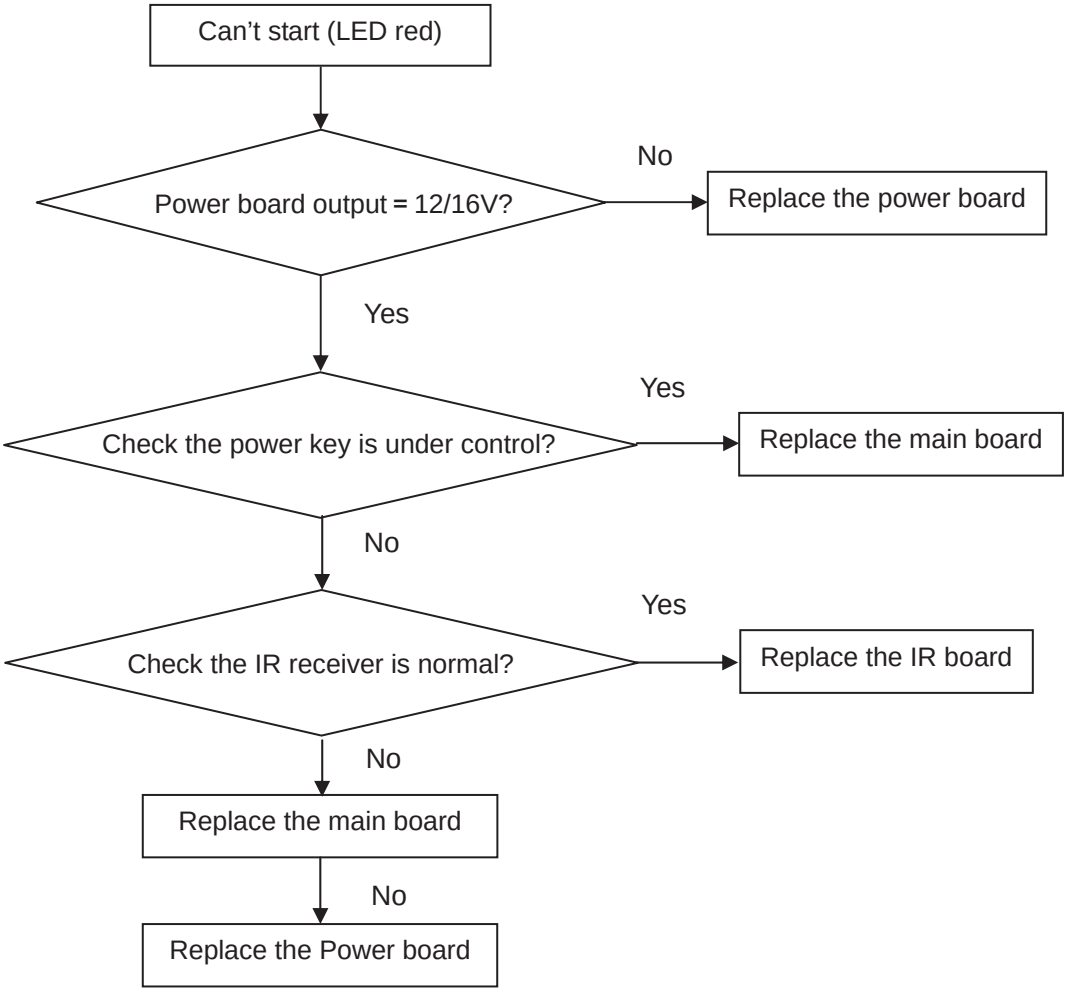
Can’t start (LED red)
Power board output = 12/16V?
No
Replace the power board
Yes
Check the power key is under control?
Yes
Replace the main board
No
Check the IR receiver is normal?
Yes
Replace the IR board
No
Replace the main board
No
Replace the Power board

3. Abnormal display

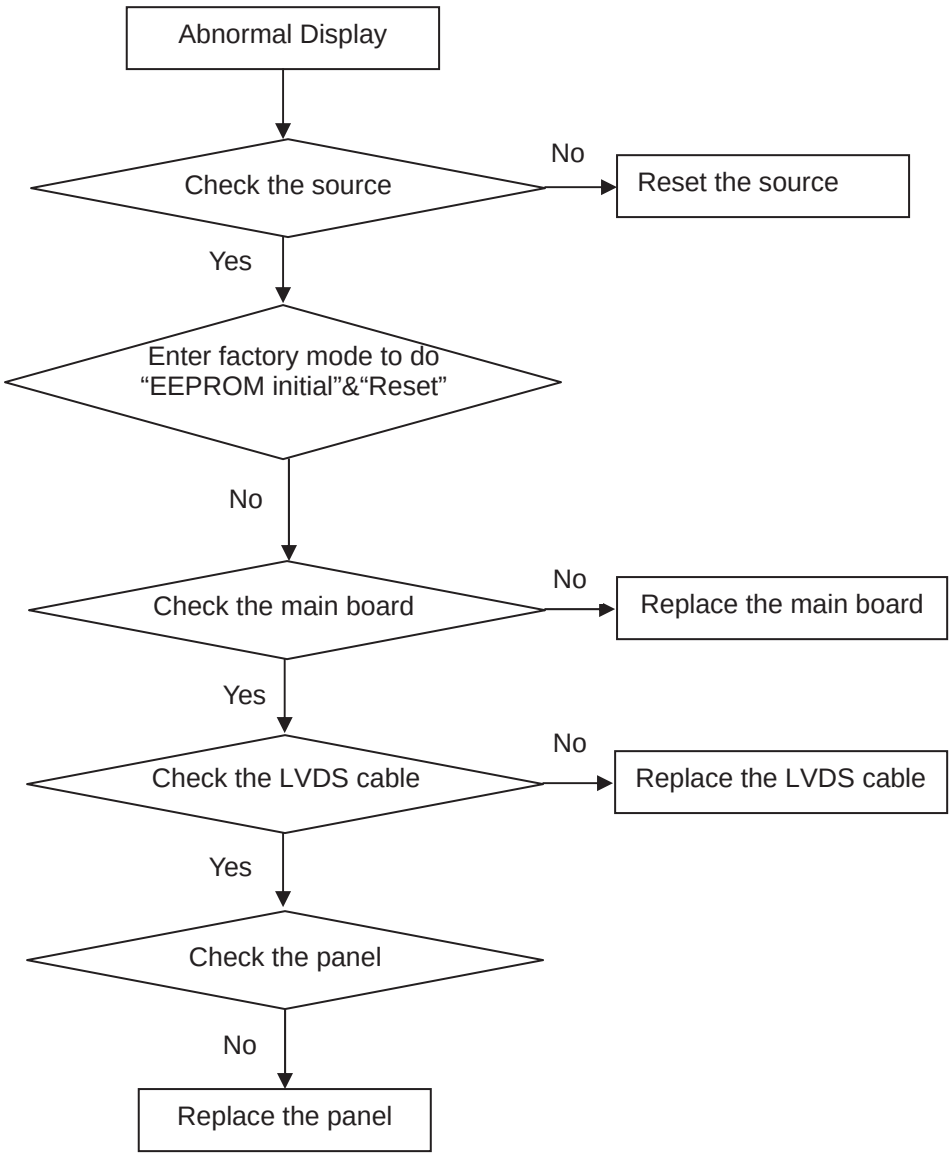

4. No display

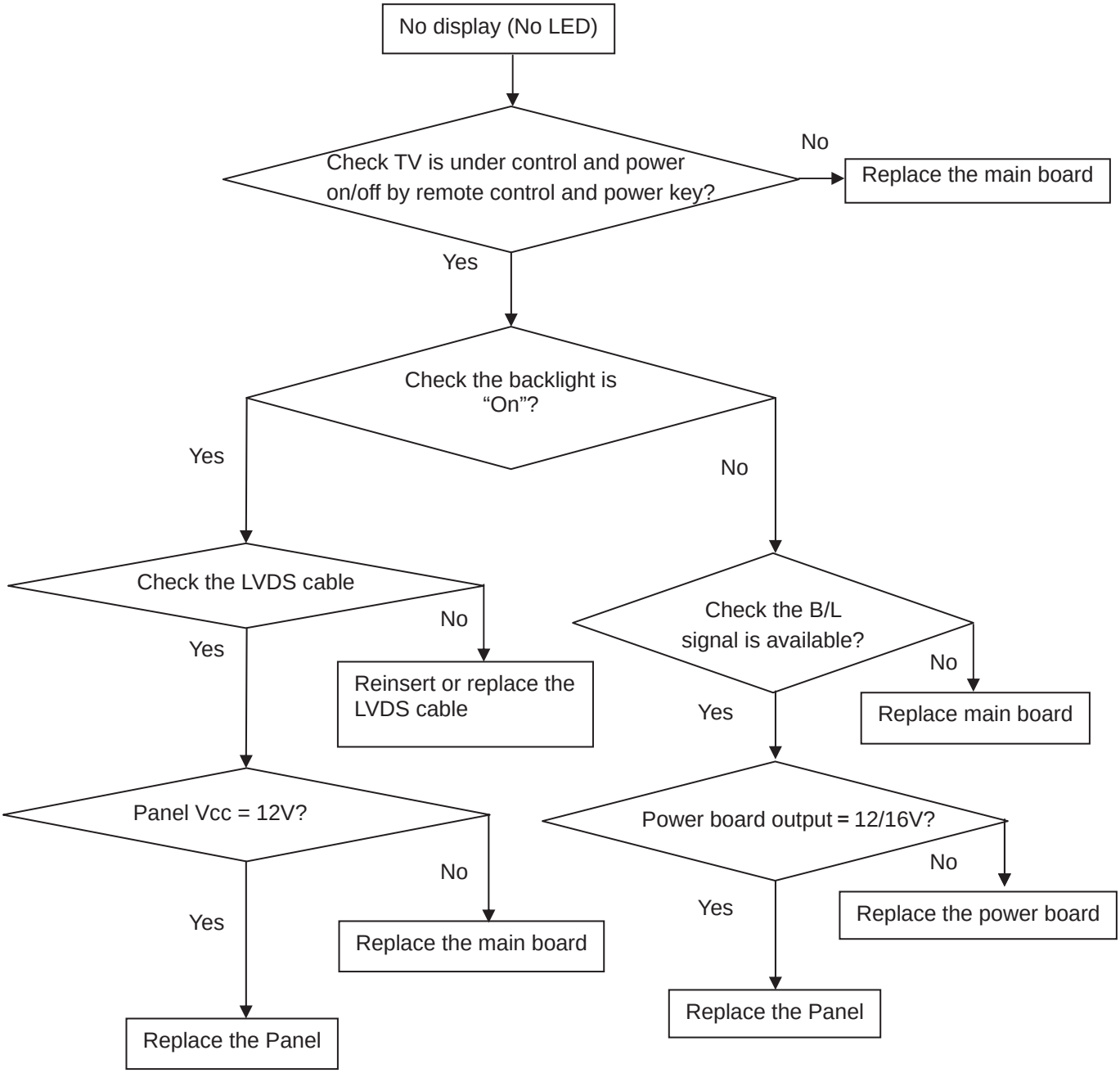
No display (No LED)
Check TV is under control and power on/off by remote control and power key?
No
Replace the main board
Yes
Check the backlight is "On"?
Yes
No
Check the LVDS cable
No
Reinsert or replace the LVDS cable
Yes
Check the B/L signal is available?
No
Replace main board
Yes
Panel Vcc = 12V?
No
Replace the main board
Yes
Replace the Panel
Power board output = 12/16V?
No
Replace the power board
Yes
Replace the Panel

5. Sound problem

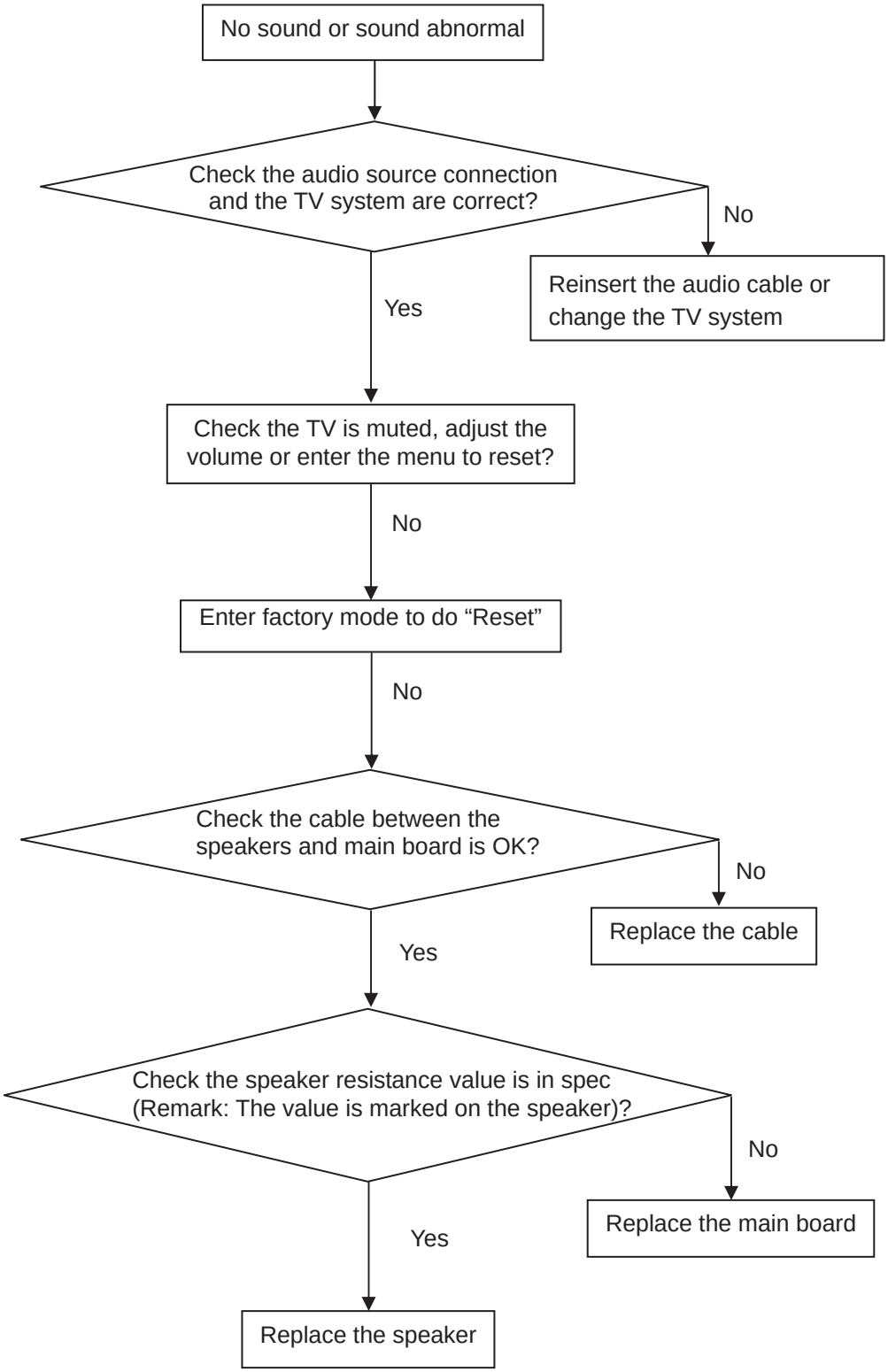

6. Remote control malfunction

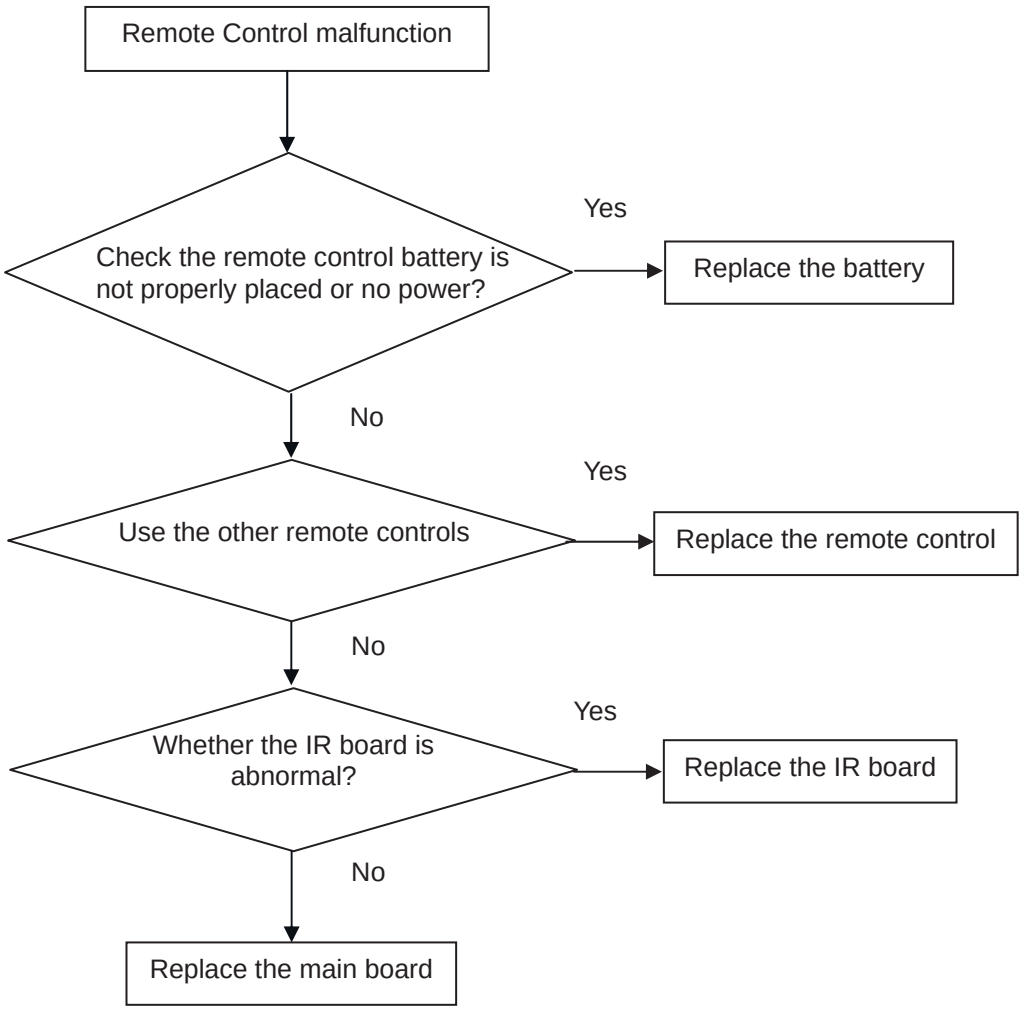

6. PCB Layout

6.1 Main Board

715G5801M0E000004K

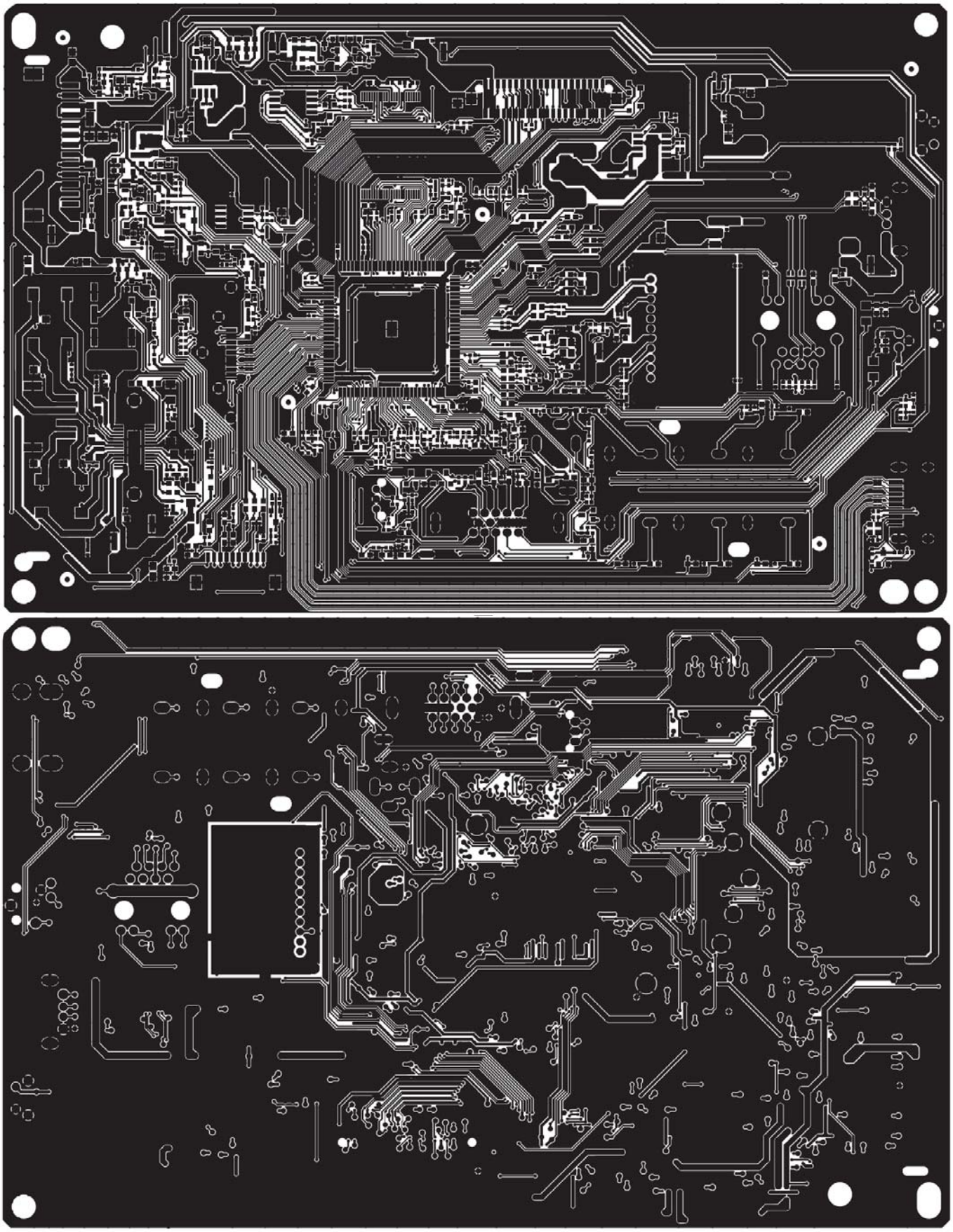

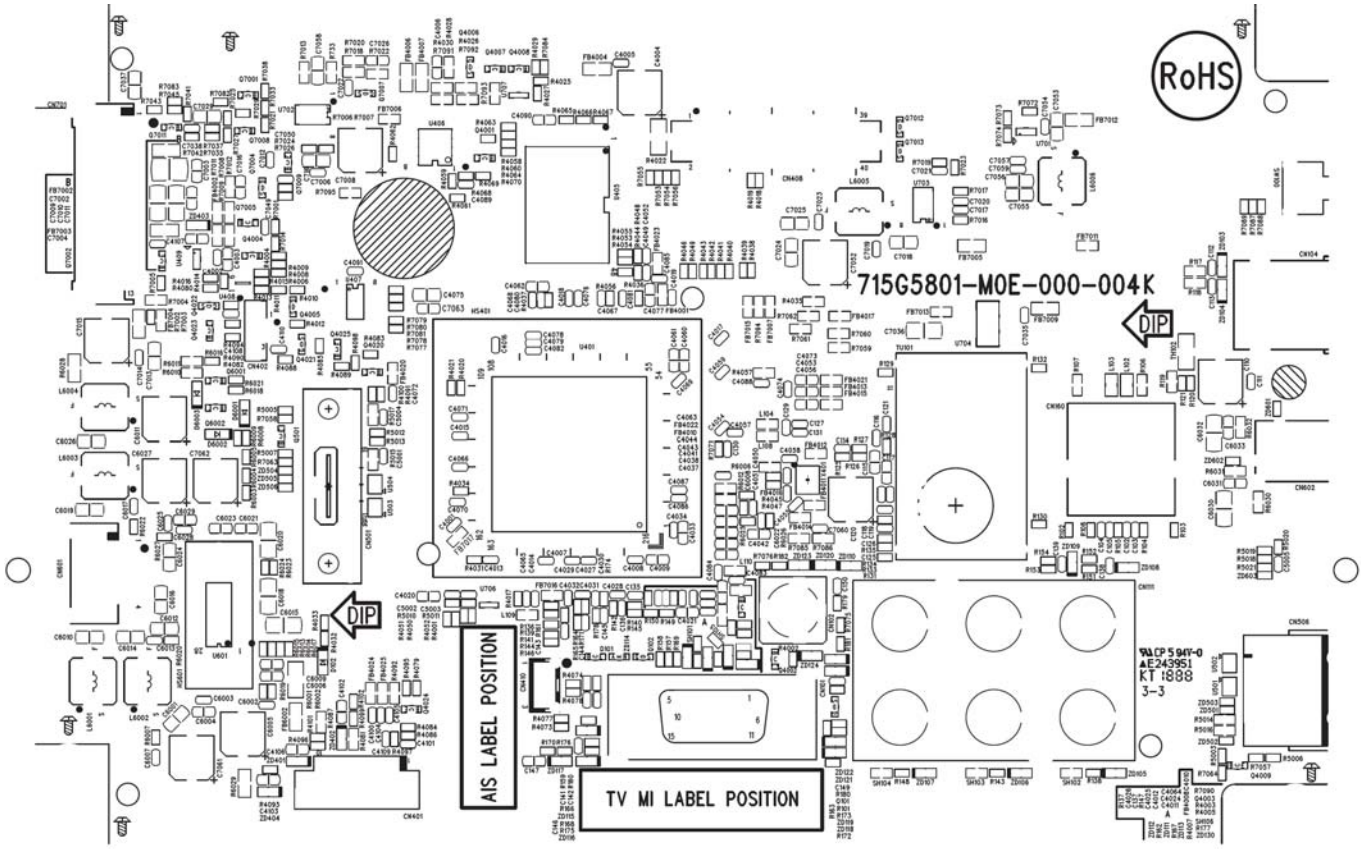
RoHS
715G5801-M0E-000-004K
DIP
DIP
AIS LABEL POSITION
TV MI LABEL POSITION

6.2 Power Board

715G5804P01W20001M

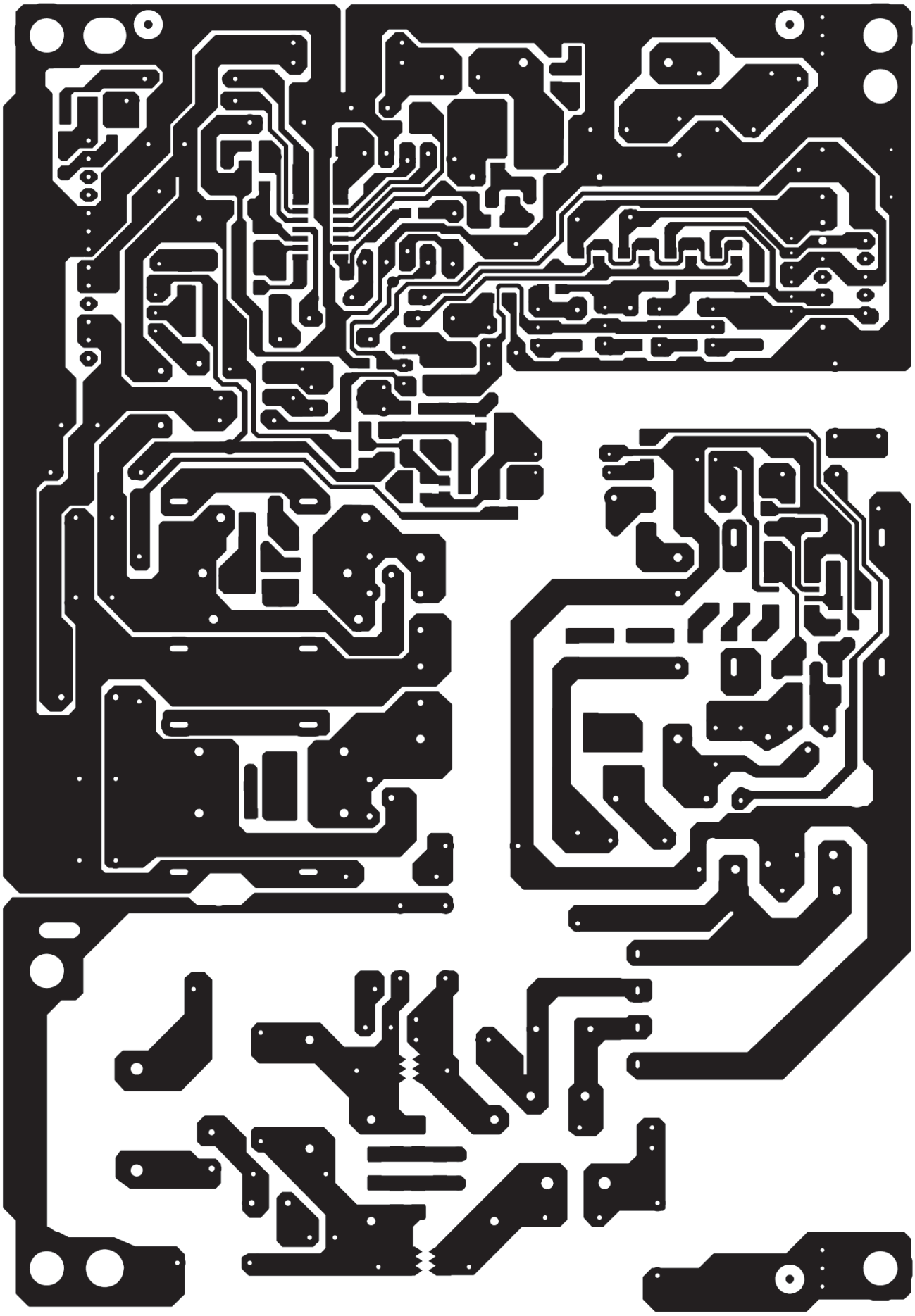

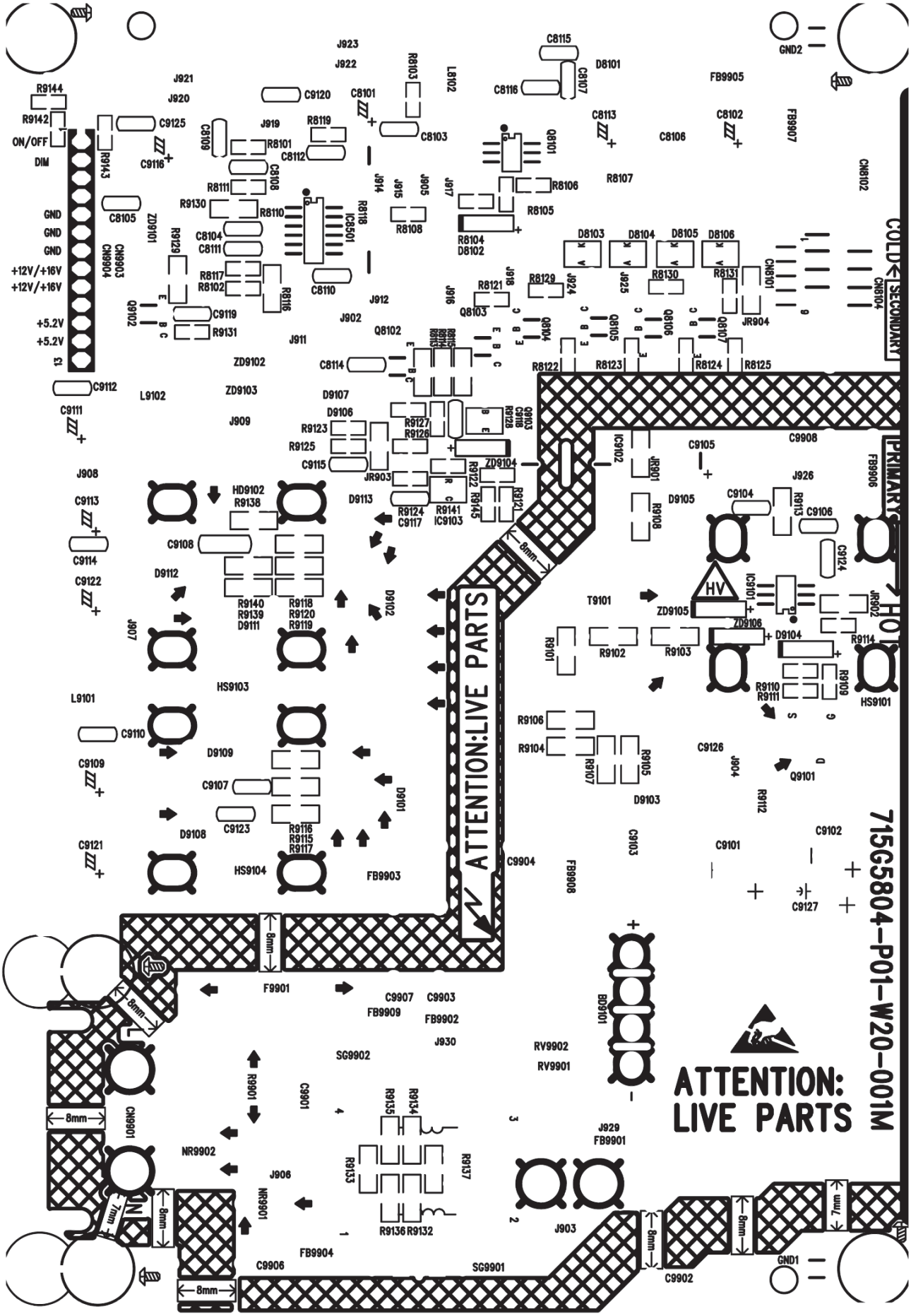
COLD SECONDARY
PRIMARY HOT
ATTENTION:LIVE PARTS
ATTENTION:
LIVE PARTS
715G5804-P01-W20-001M
ON/OFF
DIM
GND
GND
GND
+12V/+16V
+12V/+16V
+5.2V
+5.2V
HV
8mm
7mm

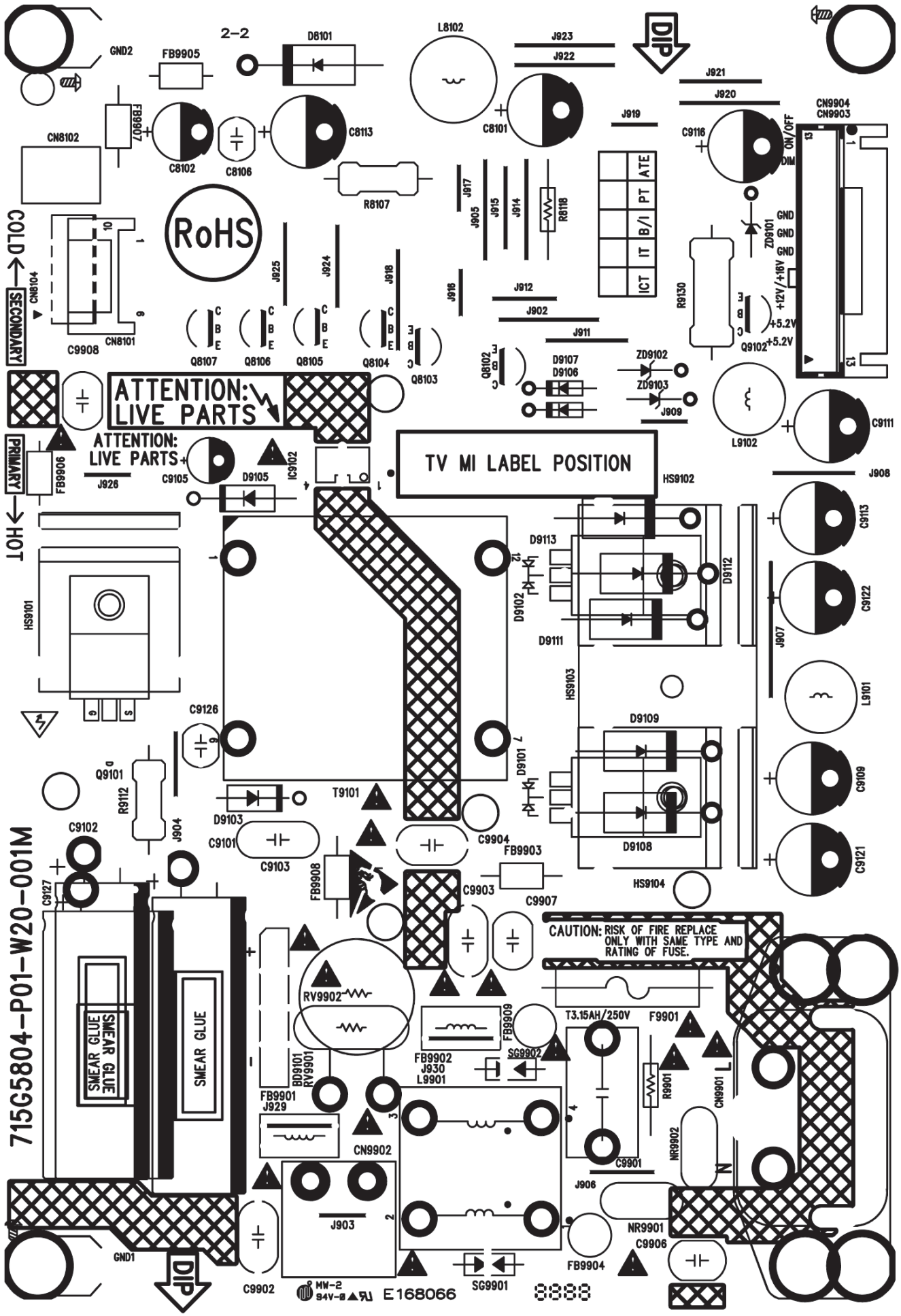
715G5804-P01-W20-001M
COLD
SECONDARY
HOT
PRIMARY
ATTENTION: LIVE PARTS
ATTENTION: LIVE PARTS
TV MI LABEL POSITION
CAUTION: RISK OF FIRE REPLACE ONLY WITH SAME TYPE AND RATING OF FUSE.
SMEAR GLUE
SMEAR GLUE
RoHS
DIP
DIP
GND1
GND2
CN8102
CN8104
CN8101
C9908
FB9906
HS9101
Q9101
R9112
J904
C9102
C9127
C9126
J926
C9105
D9105
IC9102
FB9905
FB9907
C8102
C8106
C8113
D8101
2-2
R8107
L8102
C8101
J923
J922
J921
J920
J919
C9116
CN9904
CN9903
ON/OFF
DIM
GND
GND
GND
+12V/+16V
+5.2V
+5.2V
ZD9101
R9130
Q9102
ATE
PT
B/I
IT
ICT
R8118
J917
J905
J915
J914
J916
J912
J902
J911
J925
J924
J918
Q8107
Q8106
Q8105
Q8104
Q8103
Q8102
D9107
D9106
ZD9102
ZD9103
J909
L9102
C9111
J908
HS9102
D9113
D9102
D9111
D9112
HS9103
D9109
D9101
D9108
HS9104
J907
C9113
C9122
L9101
C9109
C9121
T9101
D9103
C9101
C9103
C9904
FB9903
C9907
FB9908
C9903
RV9902
BD9101
RV9901
FB9902
J930
L9901
FB9909
SG9902
T3.15AH/250V
F9901
R9901
CN9901
NR9902
C9901
J906
NR9901
C9906
FB9904
FB9901
J929
CN9902
J903
C9902
SG9901
MW-2
94V-0
E168066

6.3 IR Board
715G6449R01000004F

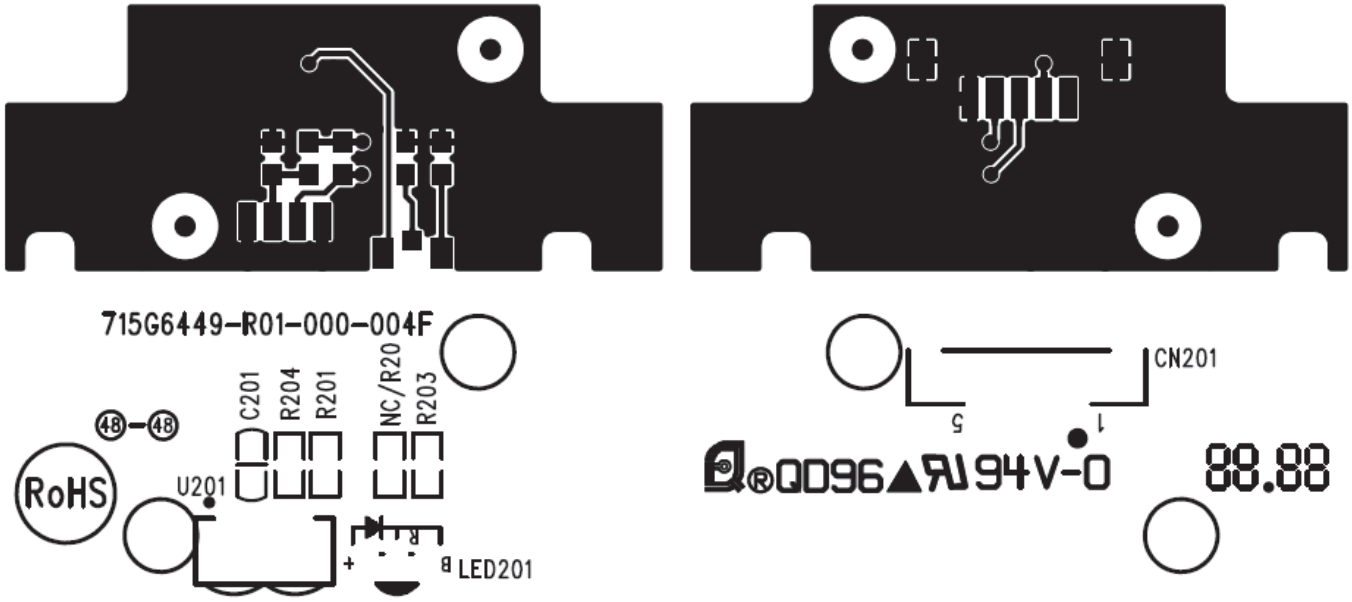

6.4 Key Board
715G6473K01000004F

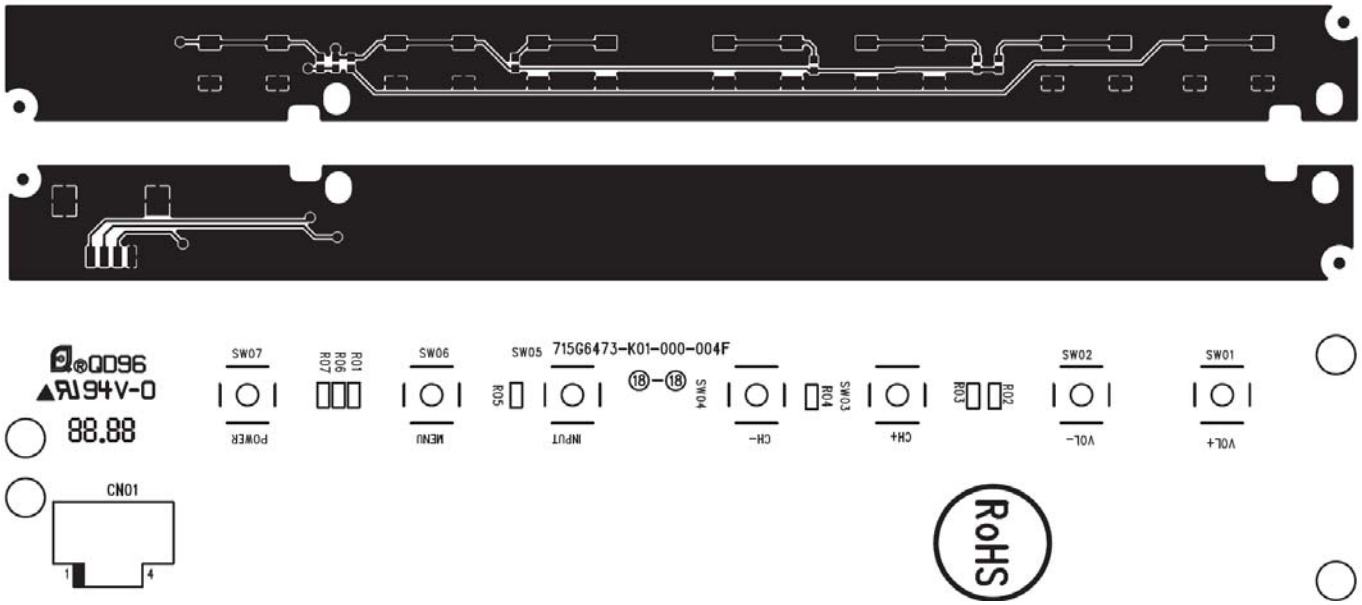

7. Adjustment

They only need adjust WB(Ypbpr's Normal/Warm/Cool).

7.1 White Balance Adjustment

1. Enter into the factory mode:MENU+1+9+9+9+back
2. Take an example of adjust Ypbpr_Normal:
   a. Select item "Source": Ypbpr and item "Color Temp": Normal.
   b. Adjust gain of RGB to meet spec in the below setting of tim\pat.
   (COMPONENT mode: TIM = 314; PAT = 141(80IRE))
3. Check the colour temperature of other "Source",
   If the colour temperature can't meet spec，please adjust it
4. The white color temperature should be app.

	Normal/(9300°K)	**Warm/(6500°K)**	**Cool/(12000°K)**
x (center)	0.285 ± 0.003	0.313 ± 0.003	0.270 ± 0.003
y (center)	0.293 ± 0.003	0.329 ± 0.003	0.273 ± 0.003
Lv(center)	>240cd	>240cd	>240cd

7.2 Firmware Instruction

Step 1: Ready for F/W Upgrade

1.1 Change the software file name to “install.img”.

1.2 Prepare a USB Disk. Copy the file “install.img” to the USB disk’s root directory.

Step 2: F/W Upgrade

2.1 Insert USB flash disk into TV’S USB .Do as the Figure2.1.

2.2 Supply AC Power to the TV , the software will update automatically, TV will restart automatically after update finish.(During the update process :TV screen will display nothing ;The indicator red light may flicker ;Forbid AC Power off; Update process will take about 70 seconds.)

2.3 Press the key combination “Menu+1999+back” by Remote Control (RC) into the factory menu, Check the Version of “ Main-MCU Ver ” Item .

2.4 Remove the cursor on the “ reset ” item (in the factory menu) by RC, and Press “OK” .TV Reset and stand by.

2.5 Finish.

8. Block Diagram

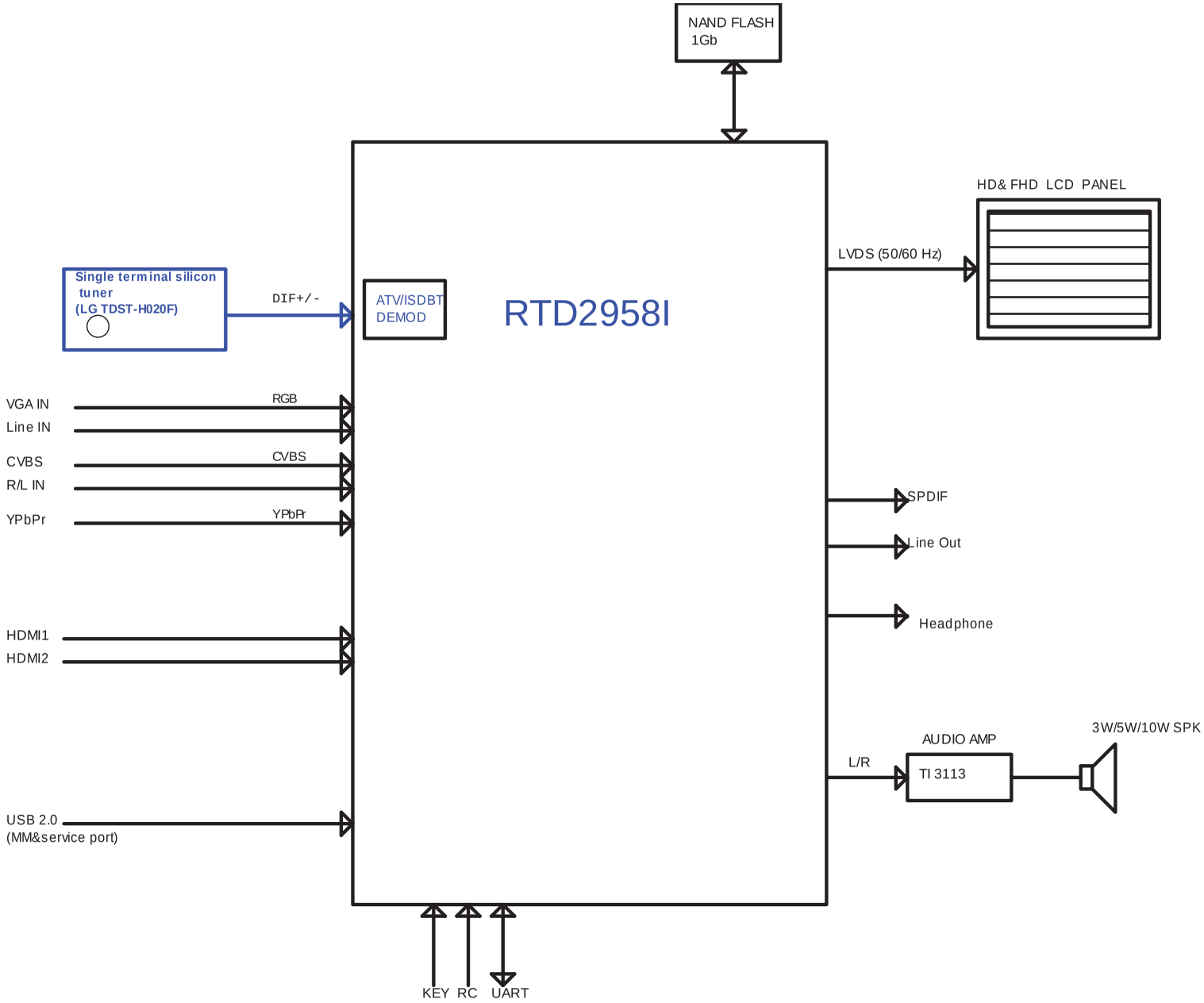

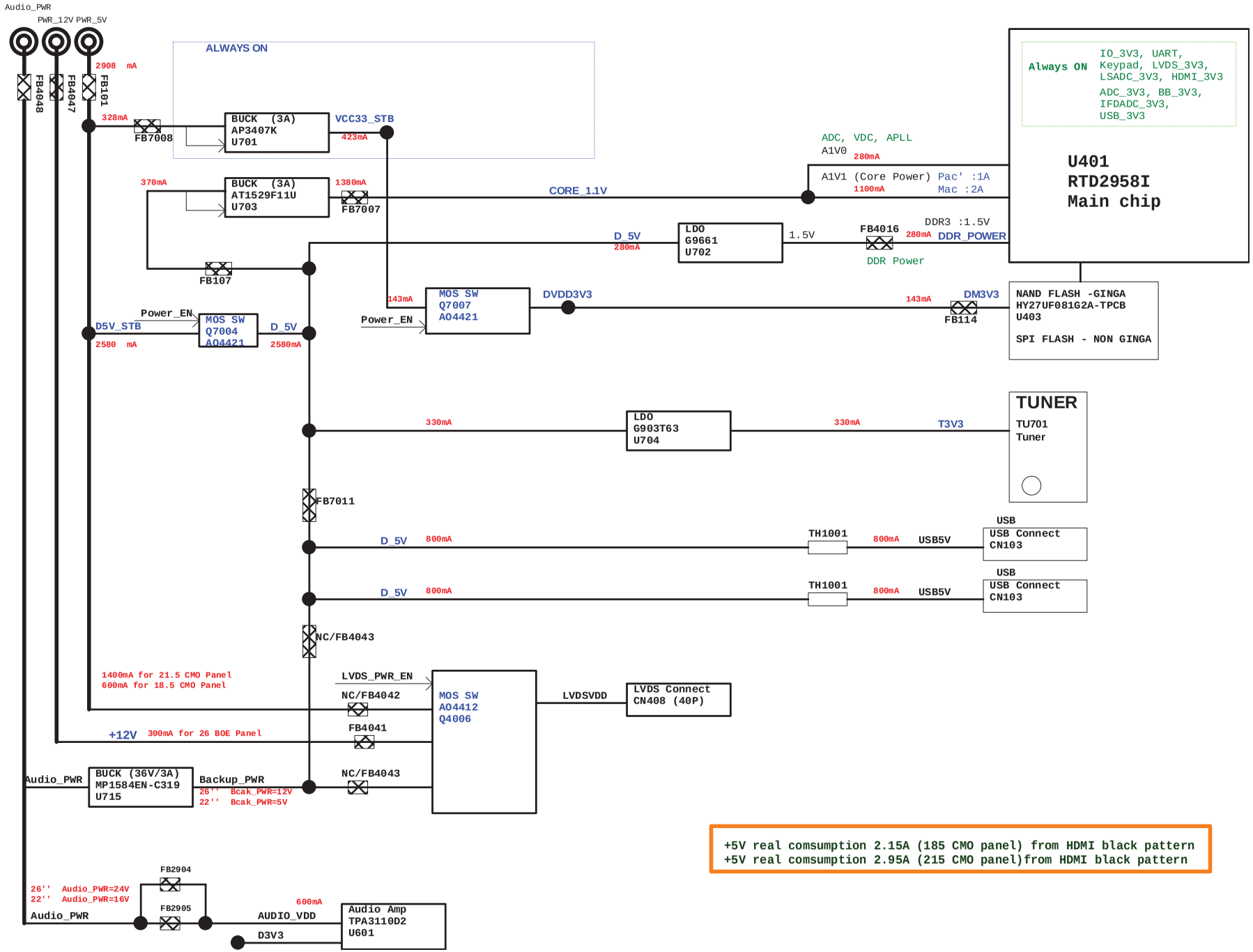

+5V real comsumption 2.15A (185 CMO panel) from HDMI black pattern
+5V real comsumption 2.95A (215 CMO panel)from HDMI black pattern

9. Schematic Diagram

9.1 Main Board

715G5801M0E000004K

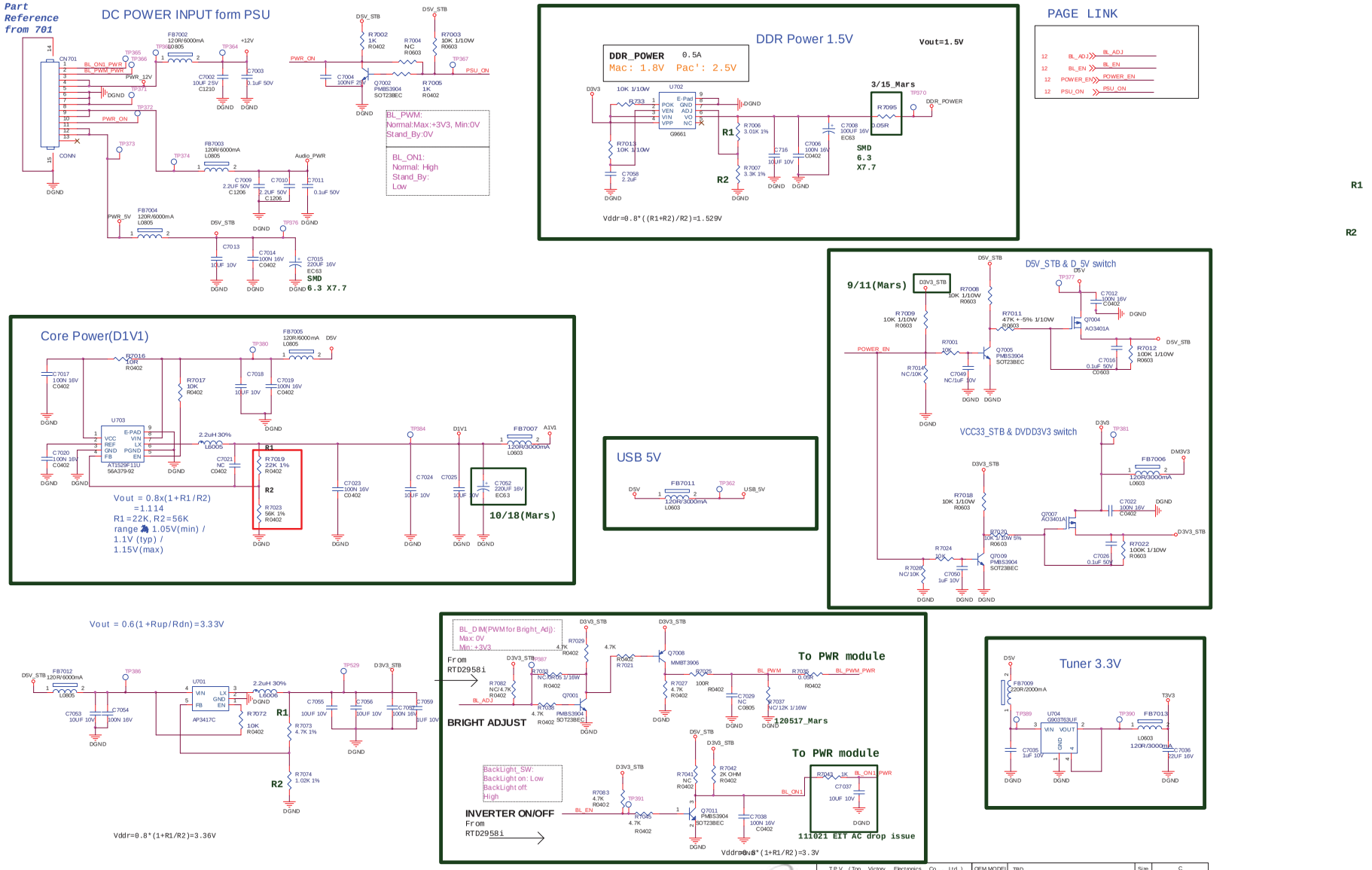

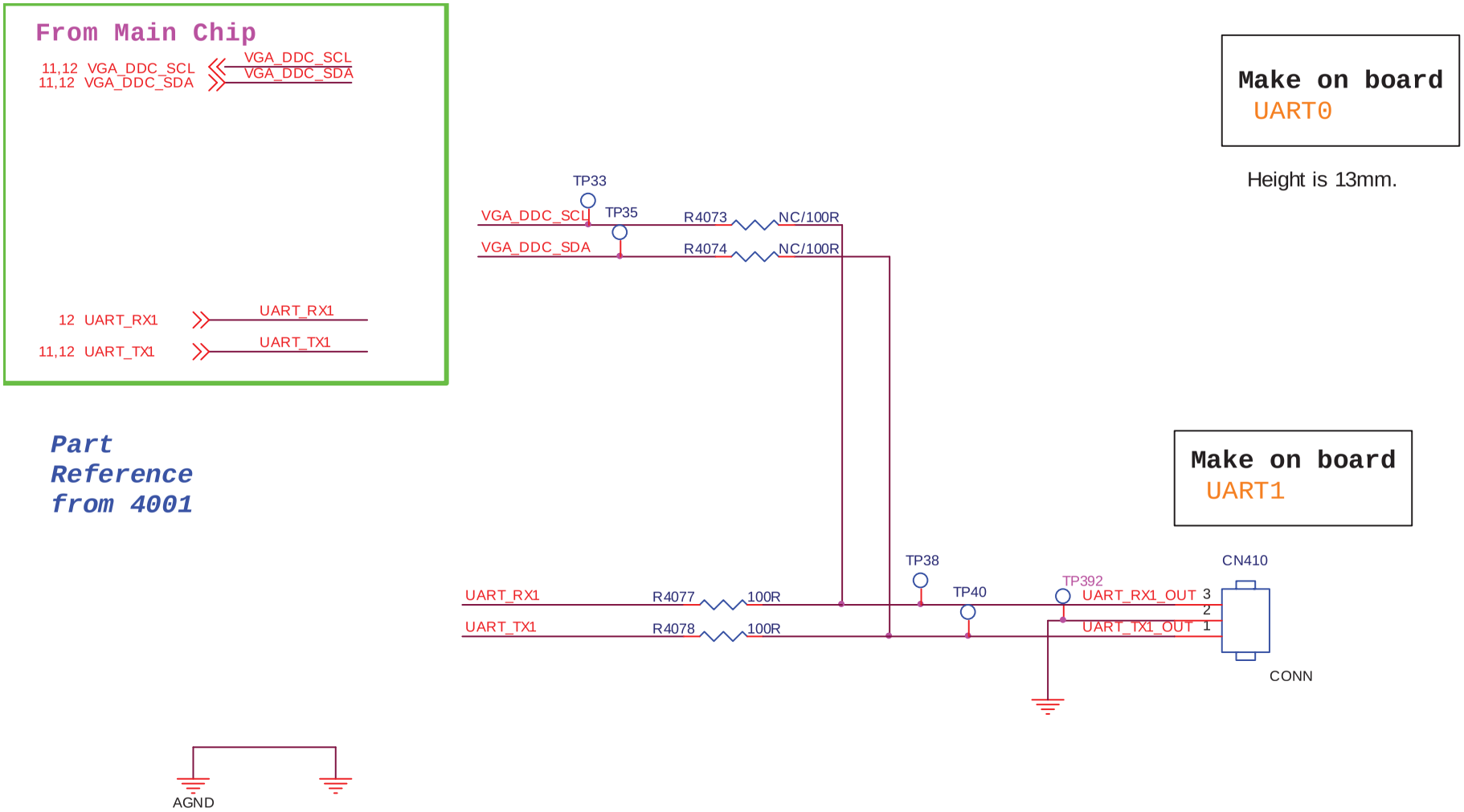

CN410 is for code download,debugging,factory aligument and compair mode, CN411 is for BUH models.

T P V (Top Victory Electronics Co . , Ltd.)		OEM MODEL	TBD	Size	A
結 隔 瓜 細 腹	G5801-M0A-000-0040-1	TPV MODEL	TBD	Rev	A
Key Component	05-1.UART	PCB NAME	TBD	称 爹	<称爹>
Date	Thursday , May 23, 2013	Sheet	6 of 19		

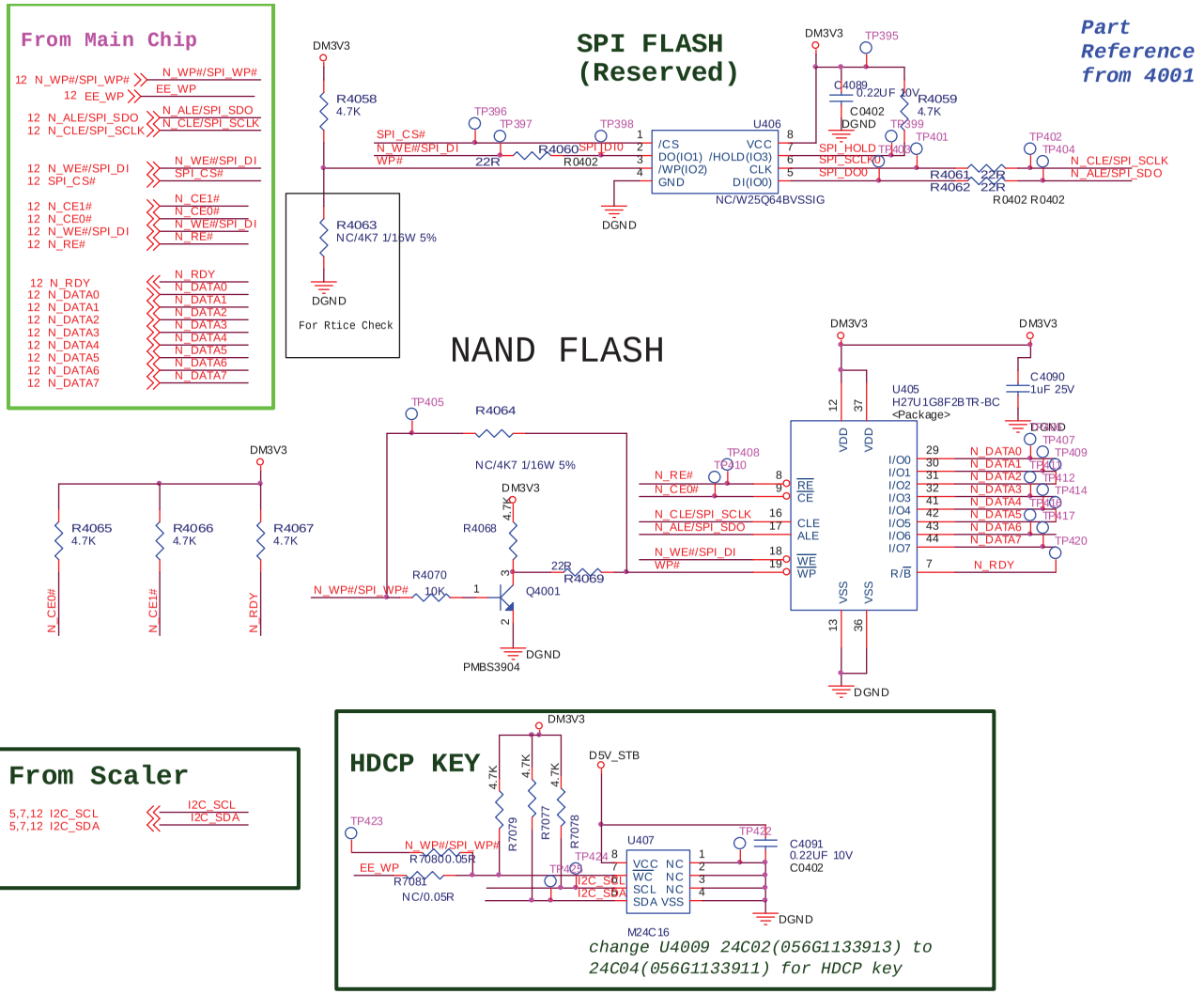

TPV (Top Victory Electronics Co., Ltd.)		OEM MODEL	TBD	Size	B
結陽瓜鋼腹	G5801-M0A-000-0040-1	TPV MODEL	TBD	Rev	A
Key Component	05-2 SPI & NAND FLASH	PCB NAME	TBD	称爹	<称爹>
Date	Thursday, May 23, 2013	Sheet	7 of 19		

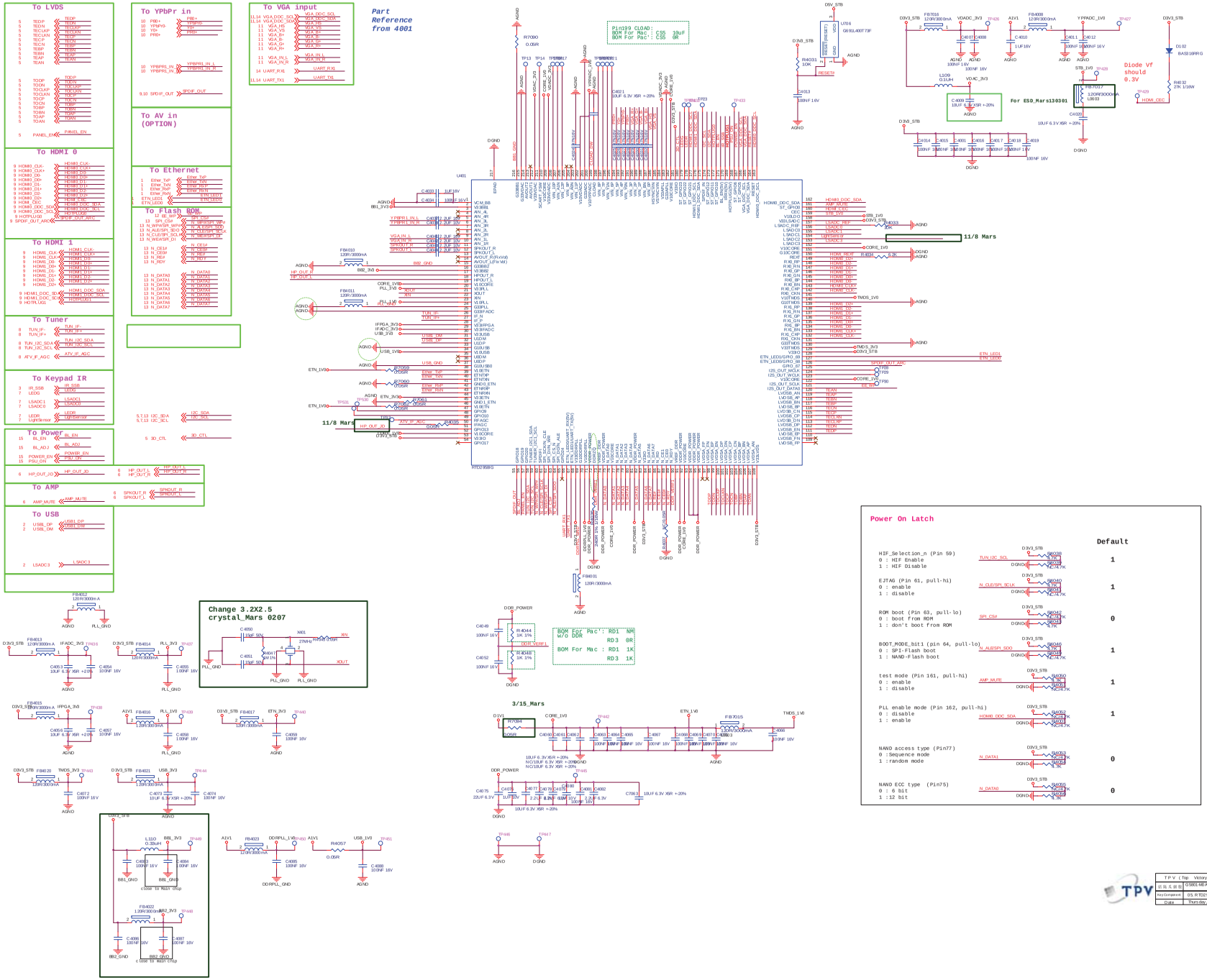

T P V (Top Victory Electronics Co., Ltd.)	OEM MODEL: TBD	Size	E
宏碁電通股	G5901-M7A-001-0040-1	TPV MODEL: TBD	Rev A
Key Component	D5: R1D2959B 216-A	PCB NAME: TBD	母板 <板 B>
Date: Thursday, May 23, 2013	Sheet 8 of 19		

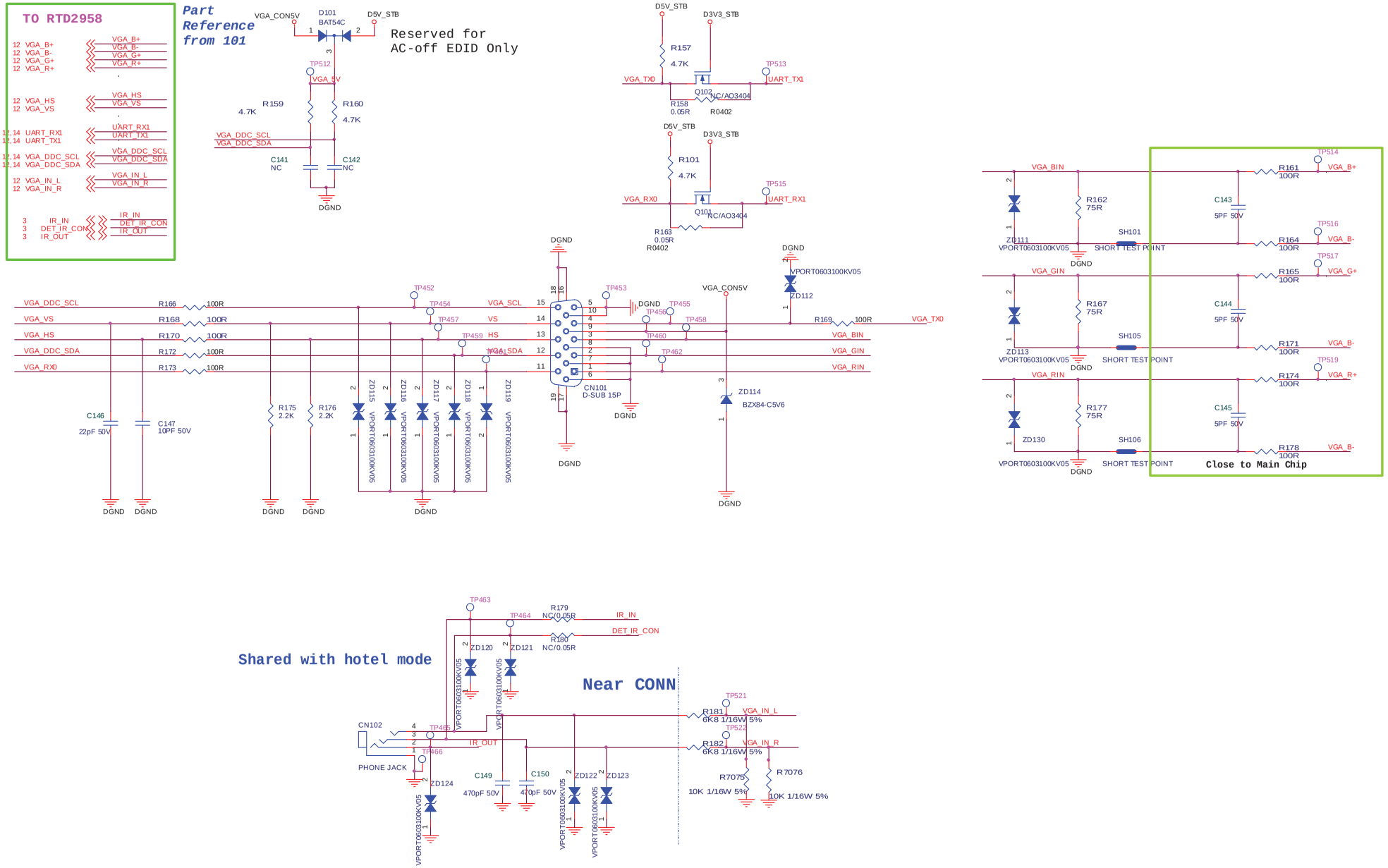

TPV (Top Victory Electronics Co., Ltd.)		OEM MODEL	TBD	Size	Custom
結構瓜鎖腹	G5801-M0A-000-0040-1	TPV MODEL	TBD	Rev	A
Key Component	06. VGA	PCB NAME	TBD	称爹	<称爹>
Date	Thursday, May 23, 2013	Sheet	9 of 19		

YPbPr

12 Y0+ — Y0+
12 PB0+ — PB0+
12 PR0+ — PR0+
12 YPbPr0- — YPbPr0-
12 YPBPR1_IN_L — YPBPR1_IN_L
12 YPBPR1_IN_R — YPBPR1_IN_R

SPDIF

9,12 SPDIF_OUT — SPDIF_OUT

Part Reference from 101

YPbPr L/R INPUT

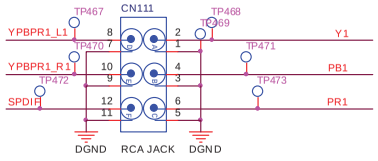

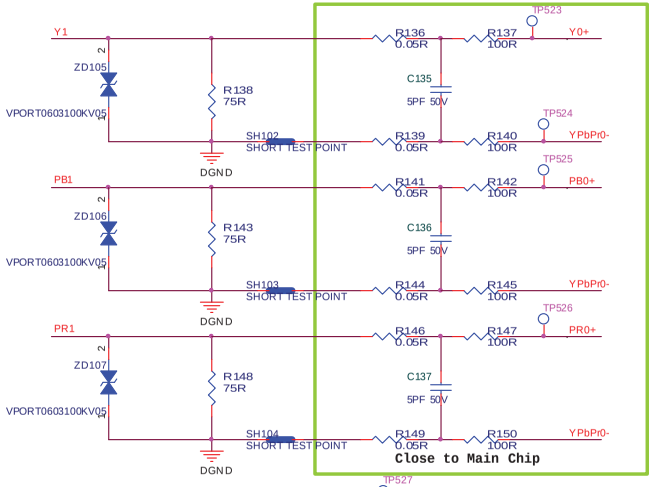

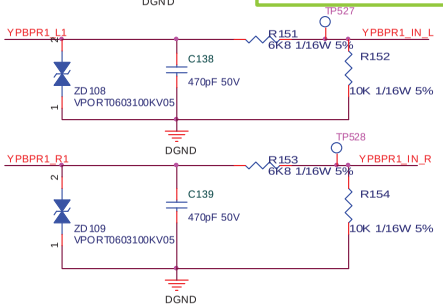

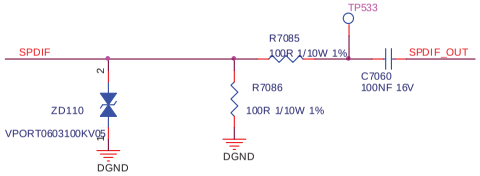

TPV (Top Victory Electronics Co., Ltd.)		OEM MODEL	TBD	Size	Custom
話 願 瓜 綢 廈	G5801-M0A-000-0040-1	TPV MODEL	TBD	Rev	A
Key Component	07 YPBPR	PCB NAME	TBD	称 案	<称案>
Date	Thursday, May 23, 2013	Sheet	10 of 19		

HDMI 0

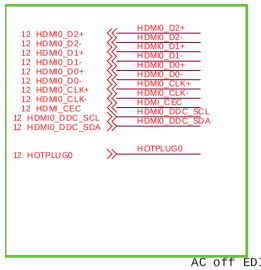

Part Reference from 501

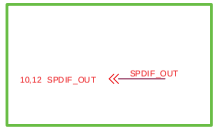

AC off EDID solution without EEPROM

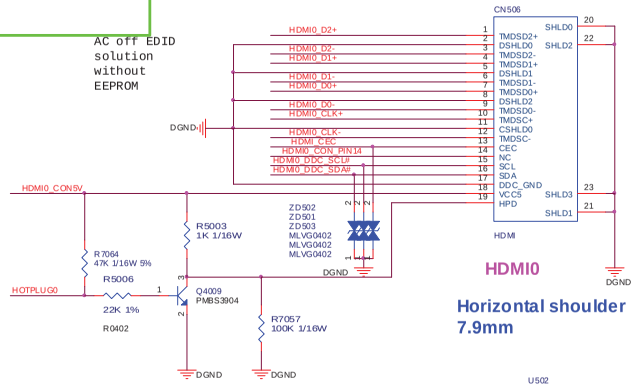

HDMI0

Horizontal shoulder 7.9mm

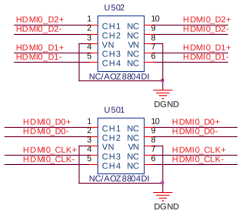

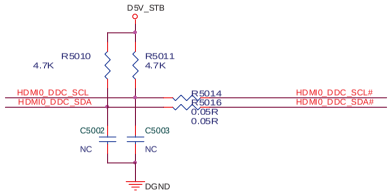

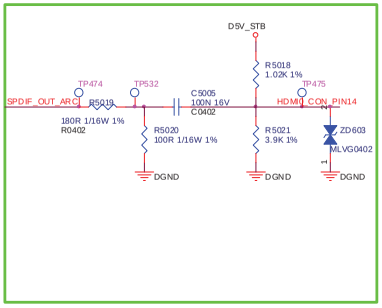

HDMI 1

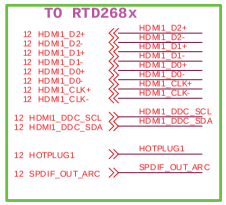

AC off EDID solution without EEPROM

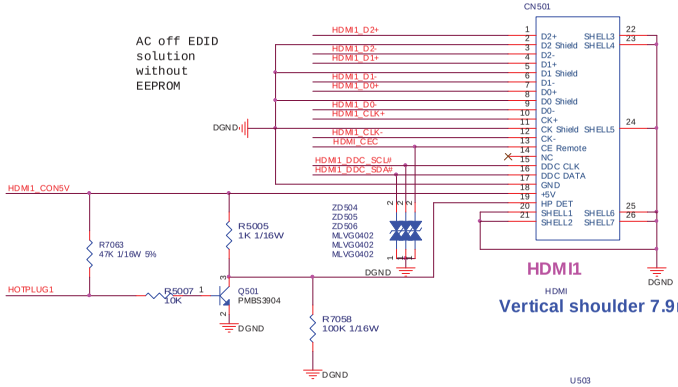

HDMI1

Vertical shoulder 7.9mm

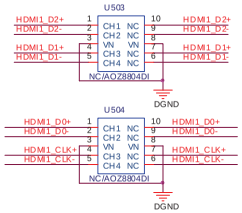

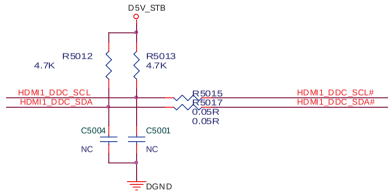

TPV (Top Victory Electronics Co., Ltd.)		OEM MODEL	TBD	Size	C
新陽瓜 瀚觀	G5801-M0A-000-0040-1	TPV MODEL	TBD	Rev	A
Key Component	08 HDMIX2	PCB NAME	TBD	称重	<称重>
Date	Thursday, May 23, 2013	Sheet	11 of 19		

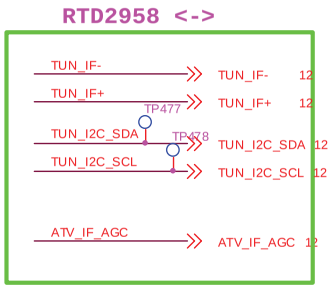

Part Reference from 101

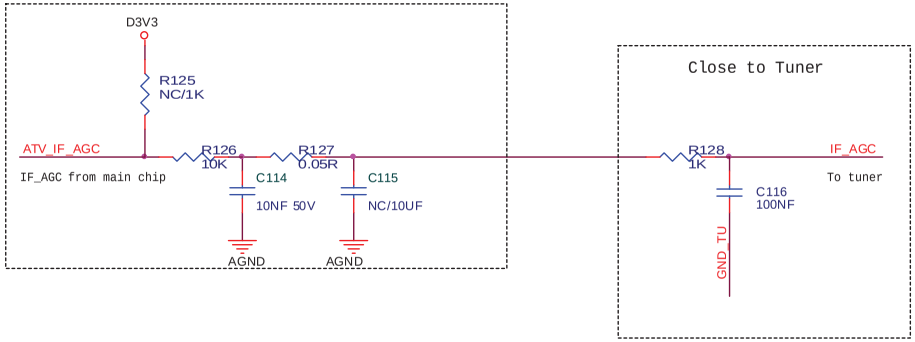

Tuner TCL
ST07CN-6-E

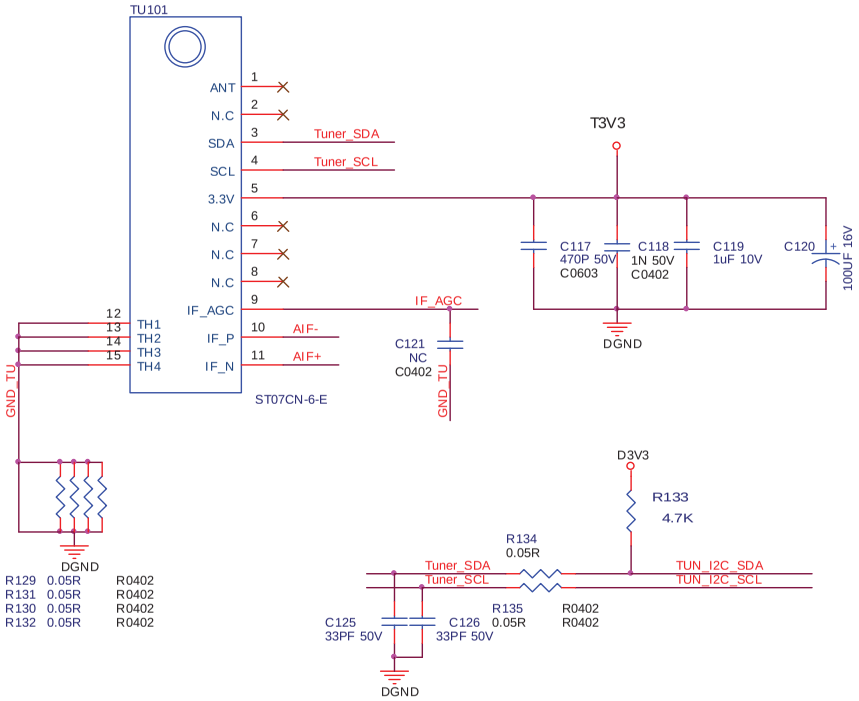

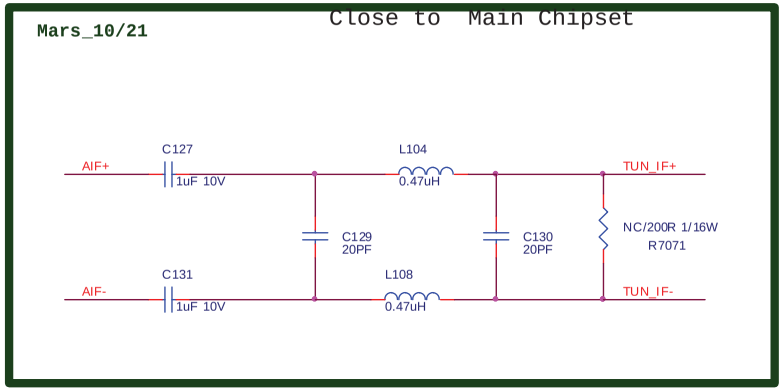

TPV (Top Victory Electronics Co., Ltd.)		OEM MODEL	TBD	Size	B
結隔瓜綱腹	G5801-M0A-000-0040-1	TPV MODEL	TBD	Rev	A
Key Component	09 TUNER	PCB NAME	TBD	称爹	<称爹>
Date	Thursday, May 23, 2013	Sheet	12 of 19		

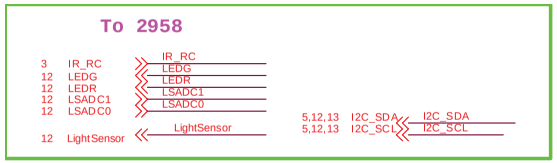

Part Reference from 4001

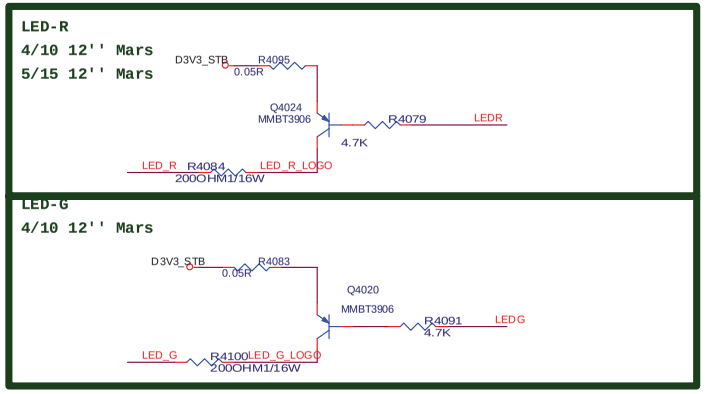

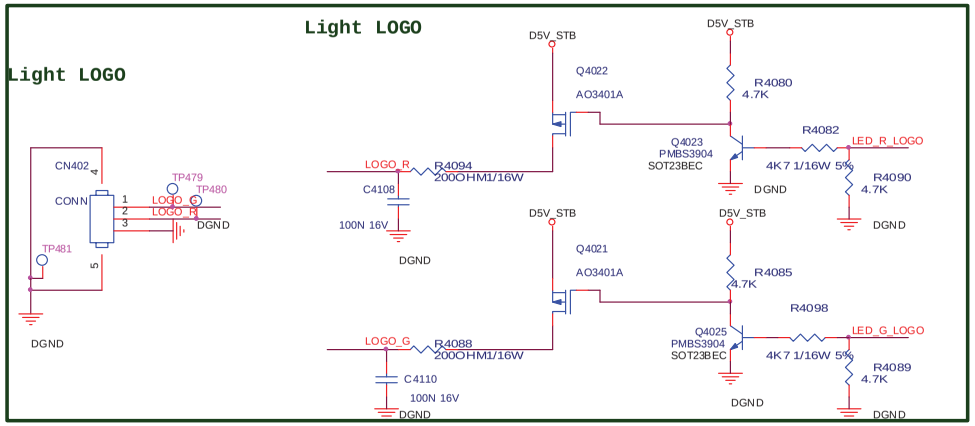

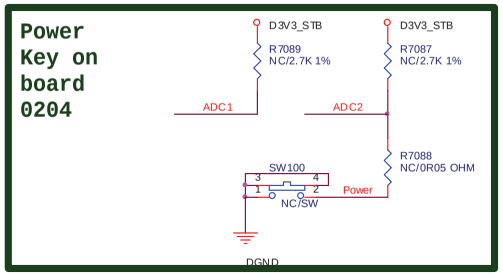

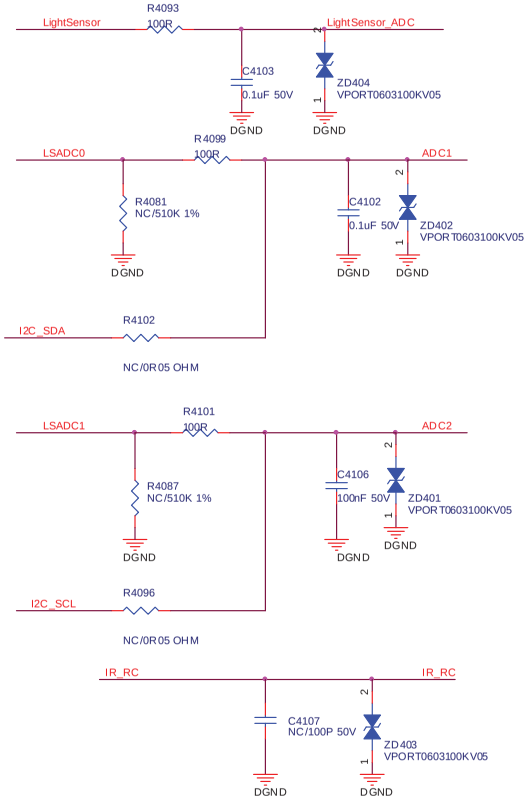

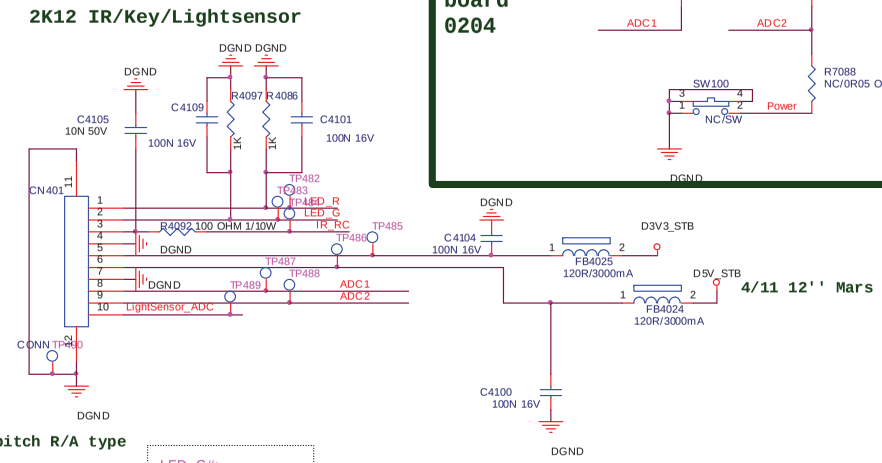

1.25 pitch R/A type

LED_G#:
Enable: Low
Disable(Stand_By): High

LED_R#:
Enable(Stand_By): Low
Disable: High

LED_G:
For flash function when

T P V (Top Victory Electronics Co., Ltd.)		OEM MODEL	TBD	Size	A3
廷陽瓜鎖腹	G5801-M0A-000-0040-1	TPV MODEL	TBD	Rev	A
Key Component	10 KEY PAD	PCB NAME	TBD	称番	<称番>
Date	Monday, September 09, 2013	Sheet	13 of 19		

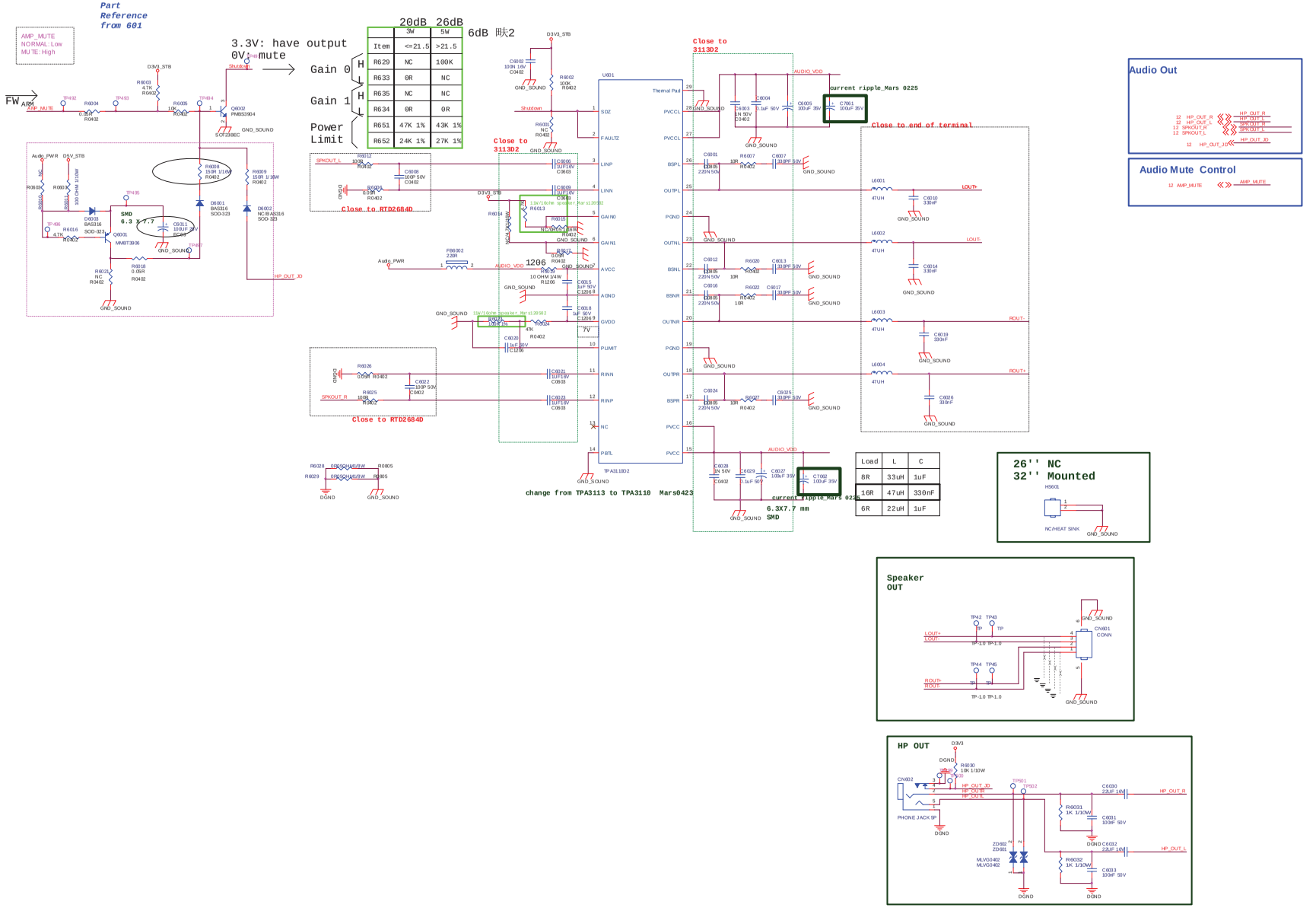

Item	3W <=21.5	5W >21.5
R629	NC	100K
R633	0R	NC
R635	NC	NC
R634	0R	0R
R651	47K 1%	43K 1%
R652	24K 1%	27K 1%

Load	L	C
8R	33uH	1uF
16R	47uH	330nF
6R	22uH	1uF

TPV (Top Victory Electronics Co., Ltd.)	OEM MODEL: TBD	Size	Custom
富翔系數數	G5801-M0A-000-00-40-1	TPV MODEL: TBD	Rev A
KeyComponent	10 AUDIO AMP_TPA3110D2	PCB NAME: TBD	修改 <修改>
Date	Thursday, May 23, 2013	Sheet 14 of 19	

Part Reference from 4001

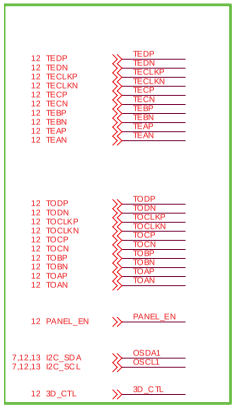

No EMI's requirement

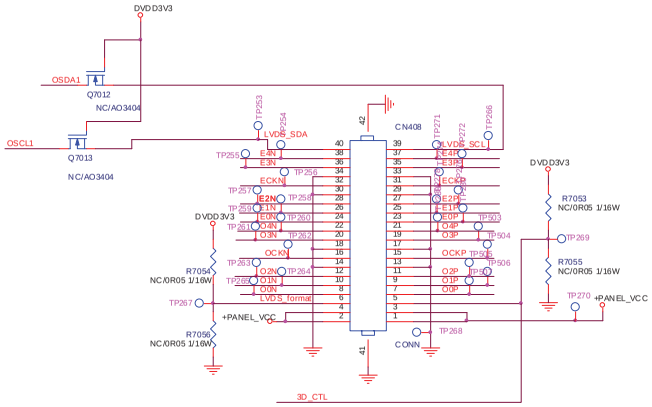

FOR WXGA PANEL

FOR FULL HD PANEL

FOR 26" ~ 40" PANEL_12Vcc

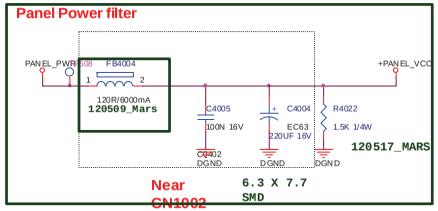

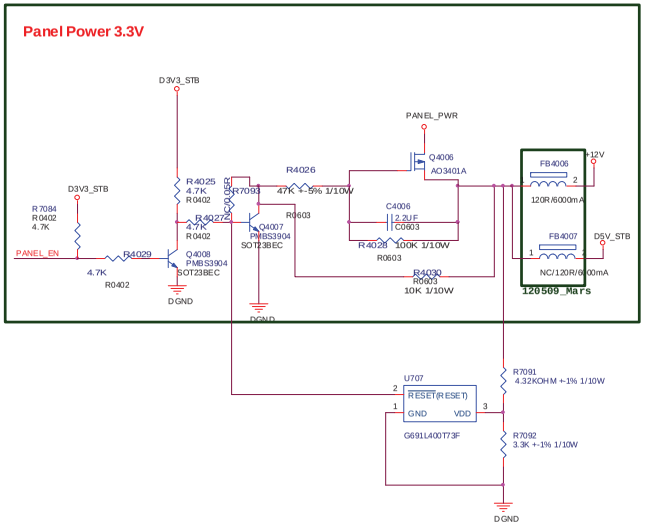

TPV (Top Victory Electronics Co., Ltd.)		OEM MODEL	TBD	Size	C
新陆瓜测数	G5801-M0A-000-0040-1	TPV MODEL	TBD	Rev	A
Key Component	12. LVDS OUT	PCB NAME	TBD	称 家	<称家>
Date	Thursday, May 23, 2013	Sheet	15 of 19		

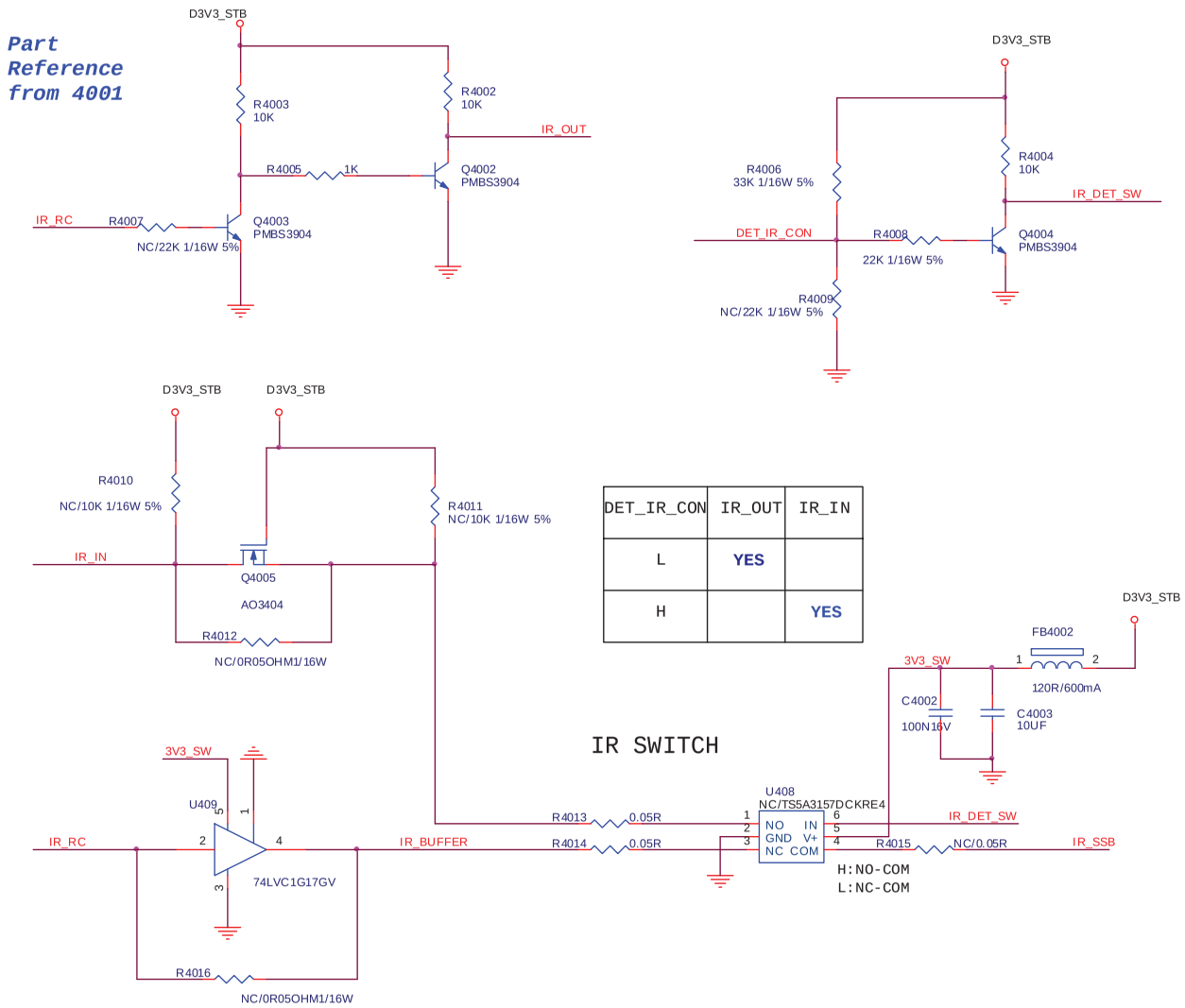

DET_IR_CON	IR_OUT	IR_IN
L	YES	
H		YES

7	IR_RC	IR_RC
12	IR_SSB	IR_SSB
11	IR_OUT	IR_OUT
11	IR_IN	IR_IN
11	DET_IR_CON	DET_IR_CON

TPV (Top Victory Electronics Co., Ltd.)		OEM MODEL	TBD	Size	B
結隔瓜細腹	G5801-M0A-000-0040-1	TPV MODEL	TBD	Rev	A
Key Component	14. IR Link	PCB NAME	TBD	称爹	<称爹>
Date	Thursday, May 23, 2013	Sheet	17 of 19		

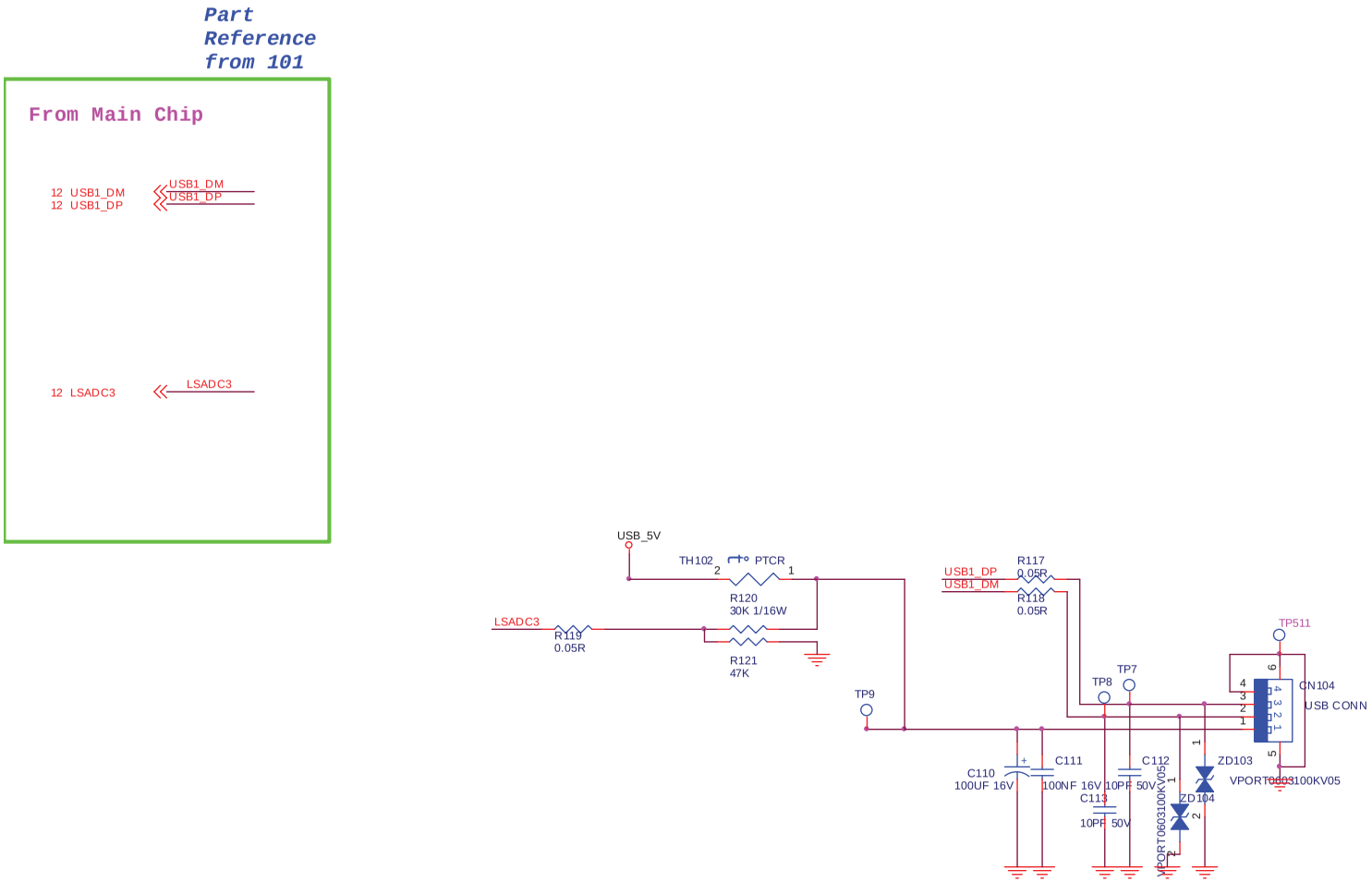

TPV (Top Victory Electronics Co., Ltd.)		OEM MODEL	TBD	Size	B
結陪瓜鋼腹	G5801-M0A-000-0040-1	TPV MODEL	TBD	Rev	A
Key Component	15. USB 2.0	PCB NAME	TBD	称爹	<称爹>
Date	Thursday, May 23, 2013	Sheet	18 of 19		

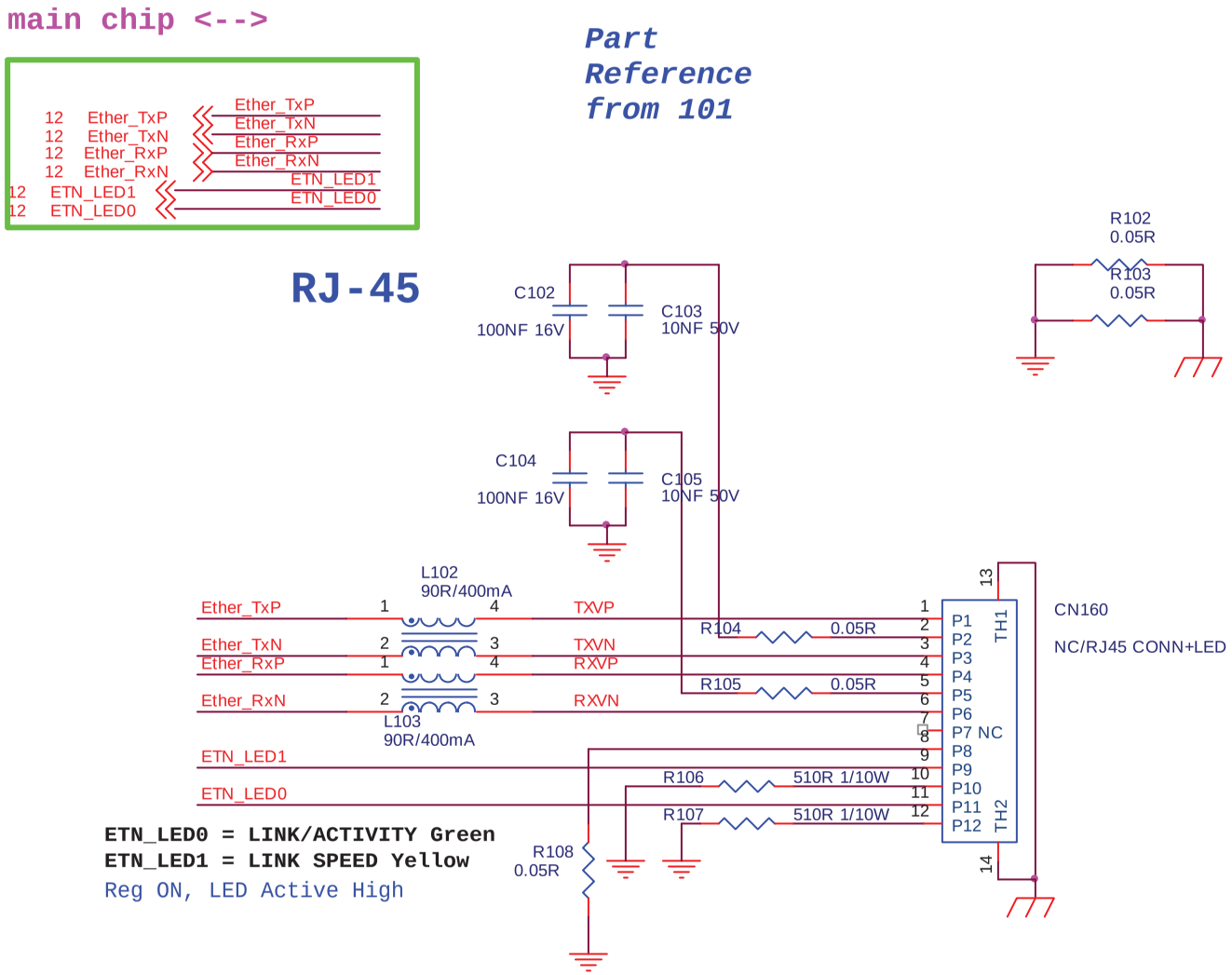

T P V (Top Victory Electronics Co., Ltd.)		OEM MODEL	TBD	Size	A
結 隔 瓜 綱 腹	G5801-M0A-000-0040-1	TPV MODEL	TBD	Rev	A
Key Component	16. Ethernet	PCB NAME	TBD	称 爹	<称爹>
Date	Thursday, May 23, 2013	Sheet	19 of 19		

9.2 Power Board

715G5804P01W20001M

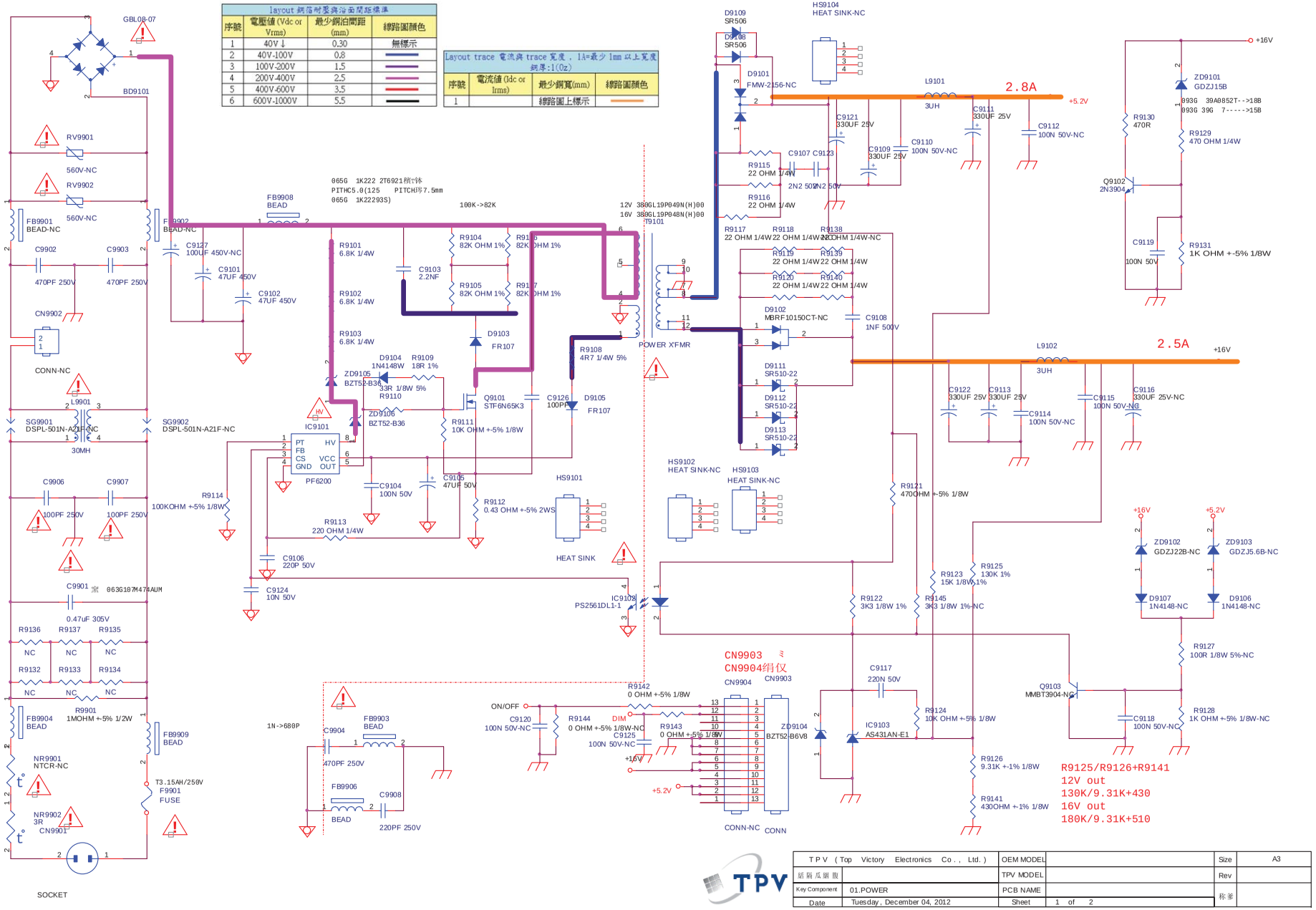

T P V (Top Victory Electronics Co., Ltd.)		OEM MODEL		Size	A3
結構瓜網圖		TPV MODEL		Rev	
Key Component	01.POWER	PCB NAME		称爹	
Date	Tuesday, December 04, 2012	Sheet	1 of 2		

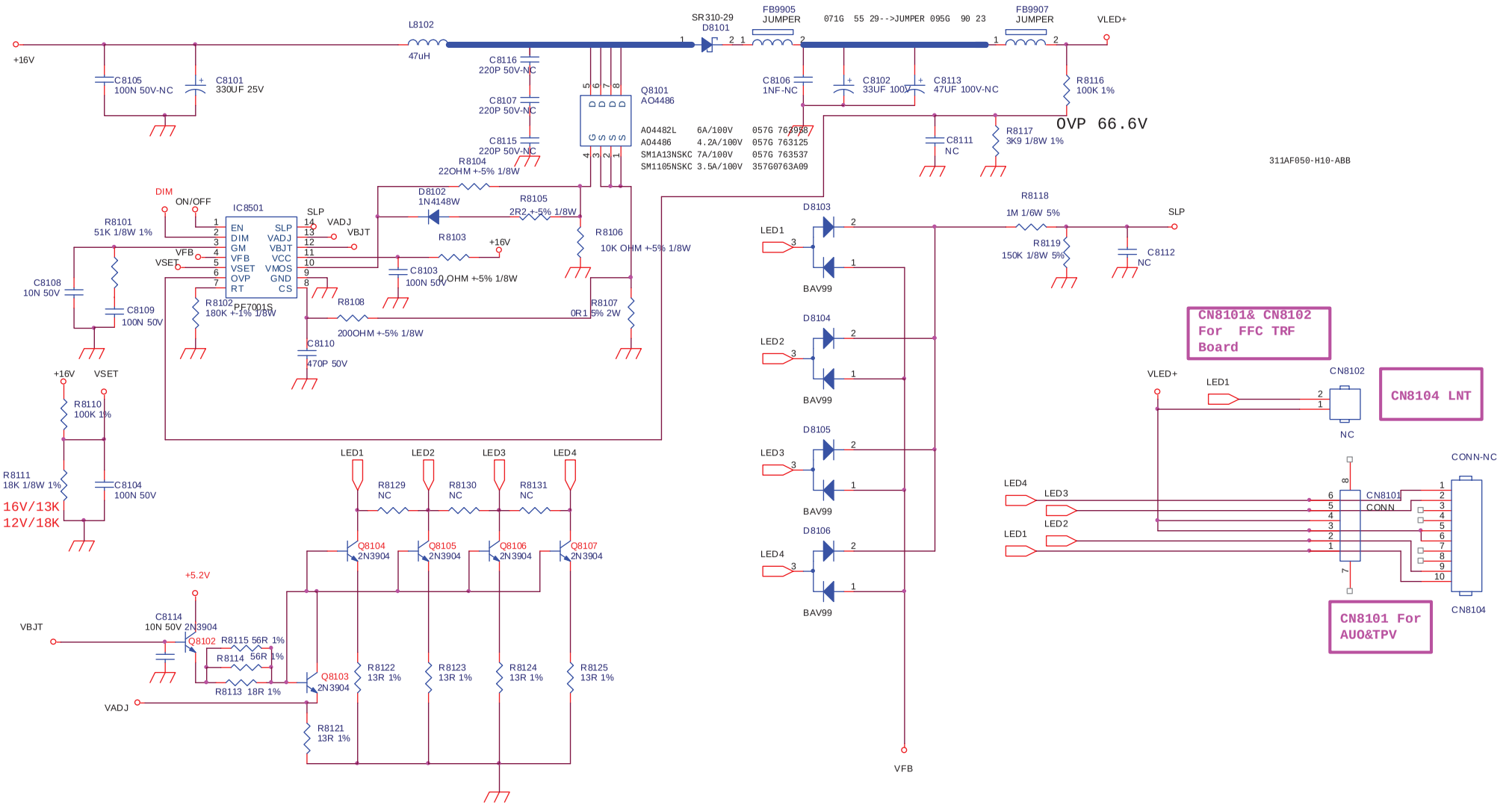

layout 銅箔耐壓與沿面間距標準			
序號	電壓值 (Vdc or Vrms)	最少銅泊間距 (mm)	線路圖顏色
1	40V ↓	0.30	無標示
2	40V-100V	0.8	
3	100V-200V	1.5	
4	200V-400V	2.5	
5	400V-600V	3.5	
6	600V-1000V	5.5	

Layout trace 電流與 trace 寬度，1A=最少 1mm 以上寬度 銅厚:1(0z)			
序號	電流值 (Idc or Irms)	最少銅寬(mm)	線路圖顏色
1		線路圖上標示	

TPV (Top Victory Electronics Co., Ltd.)		OEM MODEL		Size	B
結陽瓜鋼腹		TPV MODEL		Rev	
Key Component	02.LED DRIVER	PCB NAME		称爹	
Date	Tuesday, December 04, 2012	Sheet	2 of 2		

9.3 IR Board

715G6449R01000004F

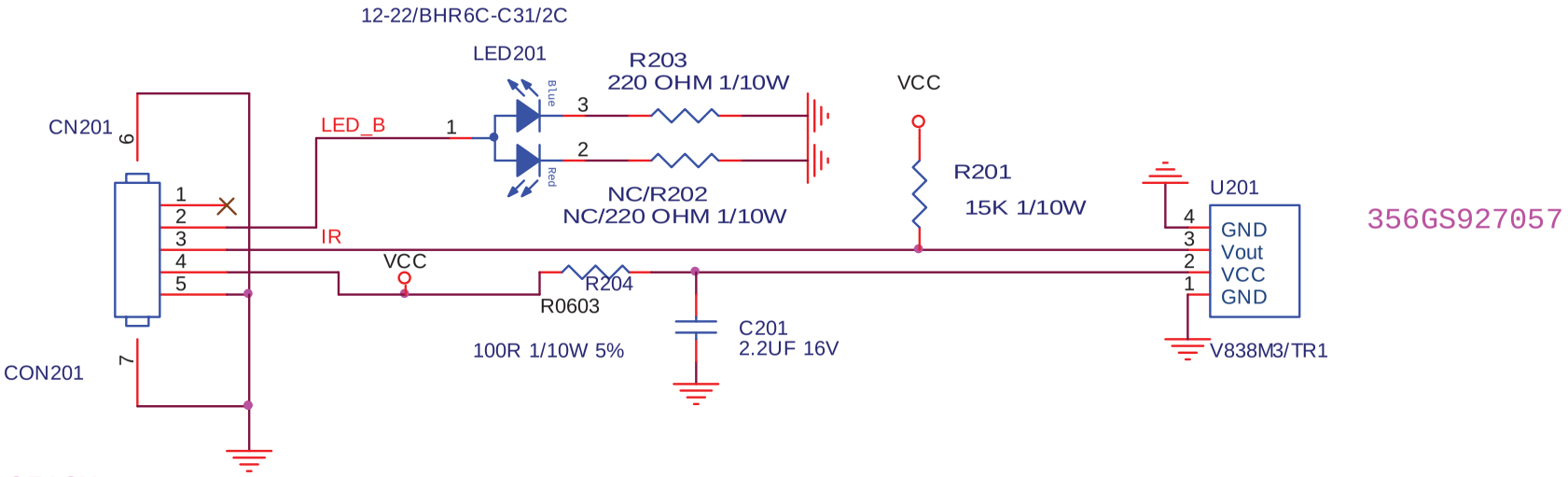

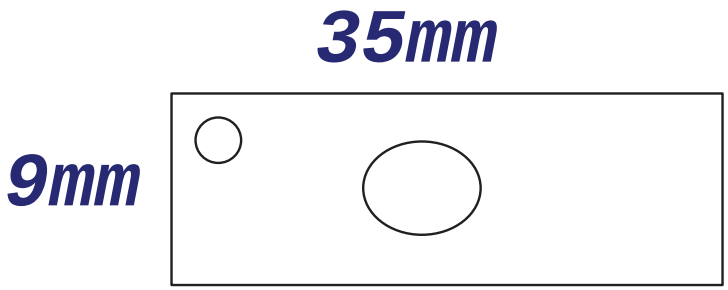

TPV (Top Victory Electronics Co., Ltd.)		OEM MODEL		Size	A
結隔瓜綢腹		TPV MODEL		Rev	A
Key Component	02-IR&LED	PCB NAME		称爹	<称爹>
Date	Friday, June 28, 2013	Sheet	2 of 2		

9.4 KEY Board

715G6473K01000004F

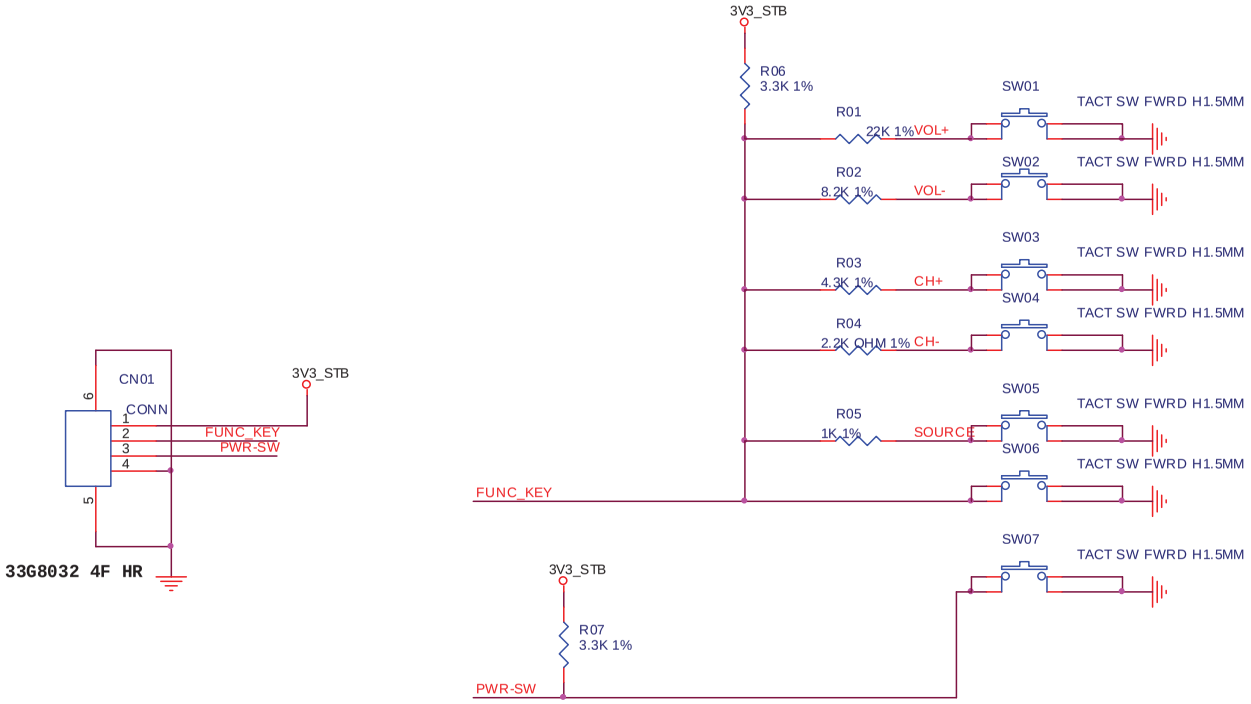

VOL+	2.77~2.97
VOL-	2.25~2.45V
CH+	1.74~1.95
CH-	1.22~1.42
Source Select	0.67V~0.87V
MENU	0V
Power ON/OFF	0V

T P V (Top Victory Electronics Co., Ltd.)		OEM MODEL		Size	Custom
結 隔 瓜 綱 腹		TPV MODEL		Rev	A
Key Component	02-Keypad	PCB NAME		称 爹	<称爹>
Date	Thursday, July 04, 2013	Sheet	2 of 2		

10. Exploded View

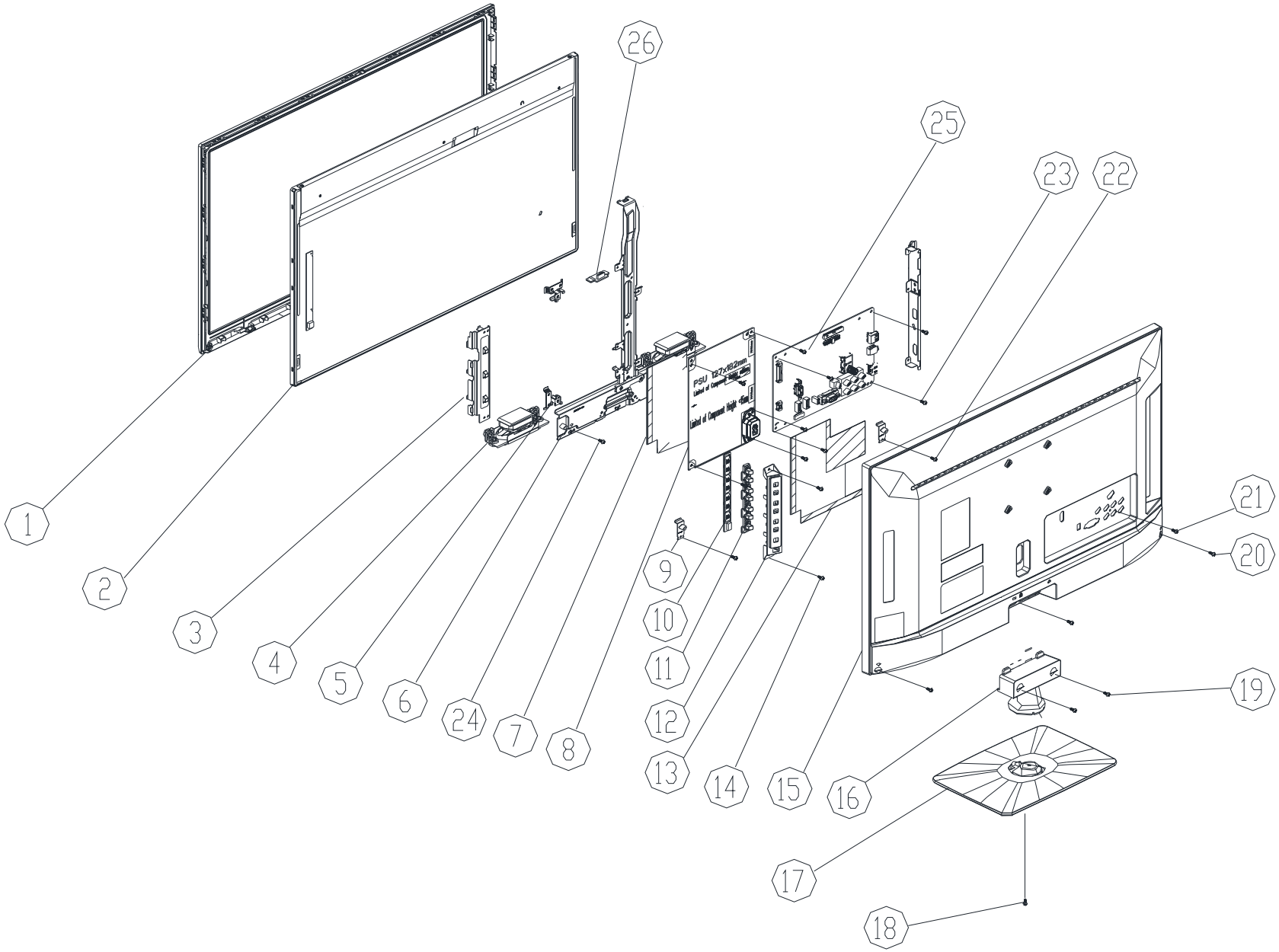

Item	Part No	Description	Qty
1	X34T0091ADTZ3LC1BA	BEZEL	1
2	750GBV236E22D1N000	PANEL	1
3	X15T8633101CKD00YF	BKT_KEY	1
4	378G0035566YAK	SPEAKER	2
5	X15T8235102CKD00YF	BKT_POWER_L SGCC	2
6	X15T8574201CKD00YF	BKT_HOLDER	1
7	Q52G18010TV0500AJY	MYLAR	1
8	PLTVDE631UXC3	POWER BOARD	1
9	X15T8601101CKD00BL	BKT_SPEAKER	2
10	KEPFDXC1C	KEY BOARD	1
11	X33T0051ADT01LC100	KEY_FUNCTION	1
12	X33T0052ADTZ1LC200	KEY_FUNCTION	1
13	X52G18010TV18901HK	MYLAR	1
14	0M1G1030 8120	SCREW(KEY_COVER/BKT_KEY)	2
15	X34T00920GM04KC101	REAR_COVER	1
16	X34T0089ADT01LC100	STAND	1
17	X34T0088ADT02LC100	BASE	1
18	0Q1G 940 18 47 CR3	SCREW(BASE/SYAND)	1
19	0M1G1740 16 47 CR3	SCREW(STAND/REAR COVER/BKT-HOLDER)	2
20	0Q1G 930 10 47 CR3	SCREW(REAR COVER/BEZEL)	3
21	0Q1G 330 8 47 CR3	SCREW(REAR COVER/MAIN BOARD)	1
22	0Q1G 930 10 47 CR3	SCREW(BKT_SPEAKER/BEZEL)	2
23	0M1G1030 6120	SCREW(POWER BOARD,MAIN BOARD/PANEL)	9
24	0Q1G 930 10 47 CR3	SCREW(BKT_HOLDER/BEZEL)	3
25	CBPFDKCSX2C	MAIN BOARD	1
26	IRPFDXC4C	IR BOARD	1

11. BOM List

Note: The following information of initial version BOM are only for reference of repair, not place the order as the basis and are subject to change without notice. Please base on RSPL or Service BOM (http://cs.tpv.com.cn), thank you!

E2CD2KNSGGB16NX

Location	Part No.	Description	Remark
	705TXDBCAF3	705 ASS'Y FOR BRAZIL PCBA	
	756TXDCB0KS0180005	MAIN BOARD-CBPFDKCSX2C	
SMTF-U405	100TARVD011S5X	MCU ASSY-056G2233 50	
	040G 457624 1B	SN LABEL	
	Z40G0002ALL01A	OTHER LABEL	
CN111	088G 78F232XQS	RCA JACK V/T 12P 2*3 G/BL/R+W/R/B H=8.6	
CN602	088G302C5B1ACL	PHONE JACK R/A 5P BLACK H=6.2	
CN104	088G352F6B3ACL	USB A TYPE R/A 6P BLACK H=8.4	
CN101	088G353FFF1XCL	D-SUB CONN SCREWED V/T 15P BLUE H=8.6	
CN410	311GW200G03BAX	WAFER 2.0MM 3P W2011-03SVA-S14	
CN102	388G302F4O3VQS	PHONE JACK V/T 4P 1*1 ORANGE 15.5	
TU101	394GATSCALL12L	TUNER -- ST07CN-6-E	
	709T58010XM001C	COMSUMPTIVE ASSY	
	055G 23524	WELDING FLUX WITHOUT PB	
	Q49G 51100	CLEANER	
	Q55G 100620500	TIN STICK(SN-0.5AG)	
HS401	P90T0059202	HEAT SINK	
CN401	033G803210F HR	CONNECTOR 10P 1.25	
U704	056G 563149	IC G903T63UF 0.6A/3.3V SOT-223	
U703	056G 563344	DC/DC AT1529F11U 3.2A SOP-8	
U702	056G 563X01	LDO G9661-25ADJF11U 2A 300MV DROP SOP-8	
U601	056G 616 54	IC TPA3110D2 15W TSSOP-28	
U706	056G 643 13	G691L400T73UF SOT-23 GMT	
U407	056G1133 56	M24C16-WMN6TP	
U405	056G2233 50	FLASH H27U1G8F2BTR-BC 1GB TSOP1-48	
U409	056G74LS 23	LOGIC 74LVC1G17GV SOT-753	
Q501	057G 417 4	PMBS3904/PHILIPS-SMT(04)	
Q7002	057G 417 4	PMBS3904/PHILIPS-SMT(04)	
Q4025	057G 417 4	PMBS3904/PHILIPS-SMT(04)	
Q7005	057G 417 4	PMBS3904/PHILIPS-SMT(04)	
Q4023	057G 417 4	PMBS3904/PHILIPS-SMT(04)	
Q4003	057G 417 4	PMBS3904/PHILIPS-SMT(04)	
Q6002	057G 417 4	PMBS3904/PHILIPS-SMT(04)	
Q4001	057G 417 4	PMBS3904/PHILIPS-SMT(04)	
Q7001	057G 417 4	PMBS3904/PHILIPS-SMT(04)	
Q7011	057G 417 4	PMBS3904/PHILIPS-SMT(04)	
Q7009	057G 417 4	PMBS3904/PHILIPS-SMT(04)	
Q4007	057G 417 4	PMBS3904/PHILIPS-SMT(04)	
Q4004	057G 417 4	PMBS3904/PHILIPS-SMT(04)	
Q4002	057G 417 4	PMBS3904/PHILIPS-SMT(04)	
Q4009	057G 417 4	PMBS3904/PHILIPS-SMT(04)	
Q4008	057G 417 4	PMBS3904/PHILIPS-SMT(04)	
Q7008	057G 417512	MMBT3906	
Q6001	057G 417512	MMBT3906	
Q4024	057G 417512	MMBT3906	
Q4020	057G 417512	MMBT3906	
Q4005	057G 763 39	FET AO3404 SOT-23 AOS	

Q7004	057G 763940	MOSFET AO3401A SOT-23	
Q4021	057G 763940	MOSFET AO3401A SOT-23	
Q4022	057G 763940	MOSFET AO3401A SOT-23	
Q4006	057G 763940	MOSFET AO3401A SOT-23	
Q7007	057G 763940	MOSFET AO3401A SOT-23	
TH102	061G 56A100 WT	PTCR SMD 0.21R MAX 0.8W	
R6015	061G0402000 JF	RST CHIPR MAX0R05 1/16W FENGHUA	
R127	061G0402000 JI	RST 0402 0.05R MAX 1/16W	
R4013	061G0402000 JI	RST 0402 0.05R MAX 1/16W	
R158	061G0402000 JI	RST 0402 0.05R MAX 1/16W	
R144	061G0402000 JI	RST 0402 0.05R MAX 1/16W	
R4045	061G0402000 JI	RST 0402 0.05R MAX 1/16W	
R7080	061G0402000 JI	RST 0402 0.05R MAX 1/16W	
R141	061G0402000 JI	RST 0402 0.05R MAX 1/16W	
R129	061G0402000 JI	RST 0402 0.05R MAX 1/16W	
R103	061G0402000 JI	RST 0402 0.05R MAX 1/16W	
R6018	061G0402000 JI	RST 0402 0.05R MAX 1/16W	
R6004	061G0402000 JI	RST 0402 0.05R MAX 1/16W	
R4095	061G0402000 JI	RST 0402 0.05R MAX 1/16W	
R6006	061G0402000 JI	RST 0402 0.05R MAX 1/16W	
R6017	061G0402000 JI	RST 0402 0.05R MAX 1/16W	
R135	061G0402000 JI	RST 0402 0.05R MAX 1/16W	
R132	061G0402000 JI	RST 0402 0.05R MAX 1/16W	
R131	061G0402000 JI	RST 0402 0.05R MAX 1/16W	
R130	061G0402000 JI	RST 0402 0.05R MAX 1/16W	
R7035	061G0402000 JI	RST 0402 0.05R MAX 1/16W	
R105	061G0402000 JI	RST 0402 0.05R MAX 1/16W	
R149	061G0402000 JI	RST 0402 0.05R MAX 1/16W	
R136	061G0402000 JI	RST 0402 0.05R MAX 1/16W	
R134	061G0402000 JI	RST 0402 0.05R MAX 1/16W	
R146	061G0402000 JI	RST 0402 0.05R MAX 1/16W	
R4014	061G0402000 JI	RST 0402 0.05R MAX 1/16W	
R6026	061G0402000 JI	RST 0402 0.05R MAX 1/16W	
R102	061G0402000 JI	RST 0402 0.05R MAX 1/16W	
R163	061G0402000 JI	RST 0402 0.05R MAX 1/16W	
R4083	061G0402000 JI	RST 0402 0.05R MAX 1/16W	
R104	061G0402000 JI	RST 0402 0.05R MAX 1/16W	
R108	061G0402000 JI	RST 0402 0.05R MAX 1/16W	
R139	061G0402000 JI	RST 0402 0.05R MAX 1/16W	
R4017	061G0402000 JY	RST CHIPR MAX 0R05 OHM 1/16W YAGEO	
R6020	061G0402100 JI	TEST ONLY RST 0402 10R 5% 1/16W TA-I	
R6007	061G0402100 JI	TEST ONLY RST 0402 10R 5% 1/16W TA-I	
R7016	061G0402100 JI	TEST ONLY RST 0402 10R 5% 1/16W TA-I	
R6027	061G0402100 JI	TEST ONLY RST 0402 10R 5% 1/16W TA-I	
R6022	061G0402100 JI	TEST ONLY RST 0402 10R 5% 1/16W TA-I	
R5020	061G04021000FT	RST CHIP 100R 1/16W 1%	
R4044	061G04021001FI	RST 0402 1K 1% 1/16W TA-I	
R4048	061G04021001FI	RST 0402 1K 1% 1/16W TA-I	
R6023	061G04021003FI	RST CHIP 100K 1/16W 1% TA-I	
R4047	061G04021004FI	RST 0402 1M 1% 1/16W TA-I	
R168	061G0402101 JI	BEST ONLY RST 0402 100R 5% 1/16W TA-I	
R166	061G0402101 JI	BEST ONLY RST 0402 100R 5% 1/16W TA-I	
R4101	061G0402101 JI	BEST ONLY RST 0402 100R 5% 1/16W TA-I	
R169	061G0402101 JI	BEST ONLY RST 0402 100R 5% 1/16W TA-I	

R145	061G0402101 JI	BEST ONLY RST 0402 100R 5% 1/16W TA-I	
R4078	061G0402101 JI	BEST ONLY RST 0402 100R 5% 1/16W TA-I	
R171	061G0402101 JI	BEST ONLY RST 0402 100R 5% 1/16W TA-I	
R161	061G0402101 JI	BEST ONLY RST 0402 100R 5% 1/16W TA-I	
R4093	061G0402101 JI	BEST ONLY RST 0402 100R 5% 1/16W TA-I	
R150	061G0402101 JI	BEST ONLY RST 0402 100R 5% 1/16W TA-I	
R142	061G0402101 JI	BEST ONLY RST 0402 100R 5% 1/16W TA-I	
R173	061G0402101 JI	BEST ONLY RST 0402 100R 5% 1/16W TA-I	
R137	061G0402101 JI	BEST ONLY RST 0402 100R 5% 1/16W TA-I	
R165	061G0402101 JI	BEST ONLY RST 0402 100R 5% 1/16W TA-I	
R6012	061G0402101 JI	BEST ONLY RST 0402 100R 5% 1/16W TA-I	
R6025	061G0402101 JI	BEST ONLY RST 0402 100R 5% 1/16W TA-I	
R178	061G0402101 JI	BEST ONLY RST 0402 100R 5% 1/16W TA-I	
R147	061G0402101 JI	BEST ONLY RST 0402 100R 5% 1/16W TA-I	
R172	061G0402101 JI	BEST ONLY RST 0402 100R 5% 1/16W TA-I	
R164	061G0402101 JI	BEST ONLY RST 0402 100R 5% 1/16W TA-I	
R140	061G0402101 JI	BEST ONLY RST 0402 100R 5% 1/16W TA-I	
R174	061G0402101 JI	BEST ONLY RST 0402 100R 5% 1/16W TA-I	
R7025	061G0402101 JI	BEST ONLY RST 0402 100R 5% 1/16W TA-I	
R170	061G0402101 JI	BEST ONLY RST 0402 100R 5% 1/16W TA-I	
R4099	061G0402101 JI	BEST ONLY RST 0402 100R 5% 1/16W TA-I	
R4077	061G0402101 JI	BEST ONLY RST 0402 100R 5% 1/16W TA-I	
R5003	061G0402102 JF	RST CHIPR 1KOHM +-5% 1/16W FENGHUA	
R5005	061G0402102 JF	RST CHIPR 1KOHM +-5% 1/16W FENGHUA	
R7005	061G0402102 JI	RST 0402 1K 5% 1/16W TA-I	
R4005	061G0402102 JI	RST 0402 1K 5% 1/16W TA-I	
R7002	061G0402102 JI	RST 0402 1K 5% 1/16W TA-I	
R4097	061G0402102 JI	RST 0402 1K 5% 1/16W TA-I	
R128	061G0402102 JI	RST 0402 1K 5% 1/16W TA-I	
R4086	061G0402102 JI	RST 0402 1K 5% 1/16W TA-I	
R7043	061G0402102 JI	RST 0402 1K 5% 1/16W TA-I	
R7074	061G04021021FI	RST 0402 1.02K 1% 1/16W TA-I	
R5018	061G04021021FT	RST 0402 1.02K 1% 1/16W TZAI YUAN	
R4031	061G0402103 JI	TEST ONLY RST 0402 10K 5% 1/16W TA-I	
R7072	061G0402103 JI	TEST ONLY RST 0402 10K 5% 1/16W TA-I	
R7001	061G0402103 JI	TEST ONLY RST 0402 10K 5% 1/16W TA-I	
R4002	061G0402103 JI	TEST ONLY RST 0402 10K 5% 1/16W TA-I	
R126	061G0402103 JI	TEST ONLY RST 0402 10K 5% 1/16W TA-I	
R7024	061G0402103 JI	TEST ONLY RST 0402 10K 5% 1/16W TA-I	
R5007	061G0402103 JI	TEST ONLY RST 0402 10K 5% 1/16W TA-I	
R7017	061G0402103 JI	TEST ONLY RST 0402 10K 5% 1/16W TA-I	
R4004	061G0402103 JI	TEST ONLY RST 0402 10K 5% 1/16W TA-I	
R4033	061G0402103 JI	TEST ONLY RST 0402 10K 5% 1/16W TA-I	
R4070	061G0402103 JI	TEST ONLY RST 0402 10K 5% 1/16W TA-I	
R6005	061G0402103 JI	TEST ONLY RST 0402 10K 5% 1/16W TA-I	
R4003	061G0402103 JI	TEST ONLY RST 0402 10K 5% 1/16W TA-I	
R7076	061G0402103 JT	RST CHIP 10K 1/16W 5% TZAI YUAN	
R152	061G0402103 JT	RST CHIP 10K 1/16W 5% TZAI YUAN	
R7075	061G0402103 JT	RST CHIP 10K 1/16W 5% TZAI YUAN	
R154	061G0402103 JT	RST CHIP 10K 1/16W 5% TZAI YUAN	
R7057	061G0402104 JF	RST CHIPR 100KOHM +-5% 1/16W FENGHUA	
R7058	061G0402104 JF	RST CHIPR 100KOHM +-5% 1/16W FENGHUA	
R6002	061G0402104 JI	TEST ONLY RST 0402 100K 5% 1/16W TA-I	
R6008	061G0402151 JI	RST 0402 150R 5% 1/16W	

R6009	061G0402151 JI	RST 0402 150R 5% 1/16W	
R5019	061G04021800FT	RST CHIP 180R 1/16W 1% TZAI YUAN	
R4084	061G0402201 JF	RST CHIPR 200 OHM +-5% 1/16W FENGHUA	
R4088	061G0402201 JF	RST CHIPR 200 OHM +-5% 1/16W FENGHUA	
R4100	061G0402201 JF	RST CHIPR 200 OHM +-5% 1/16W FENGHUA	
R4094	061G0402201 JF	RST CHIPR 200 OHM +-5% 1/16W FENGHUA	
R7042	061G0402202 JY	RST CHIPR 2KOHM 1/16W YAGEO	
R4069	061G0402220 JI	RST 0402 22R 5% 1/16W TA-I	
R4062	061G0402220 JI	RST 0402 22R 5% 1/16W TA-I	
R4060	061G0402220 JI	RST 0402 22R 5% 1/16W TA-I	
R4021	061G0402220 JI	RST 0402 22R 5% 1/16W TA-I	
R4020	061G0402220 JI	RST 0402 22R 5% 1/16W TA-I	
R4019	061G0402220 JI	RST 0402 22R 5% 1/16W TA-I	
R4018	061G0402220 JI	RST 0402 22R 5% 1/16W TA-I	
R4061	061G0402220 JI	RST 0402 22R 5% 1/16W TA-I	
R5006	061G04022202FI	RST 0402 22K 1% 1/16W TA-I	
R7019	061G04022202FI	RST 0402 22K 1% 1/16W TA-I	
R175	061G0402222 JI	TEST ONLY RST 0402 2.2K 5% 1/16W TA-I	
R176	061G0402222 JI	TEST ONLY RST 0402 2.2K 5% 1/16W TA-I	
R4008	061G0402223 JT	RST CHIP 22K 1/16W 5% TZAI YUAN	
R4036	061G04022400FI	RST 0402 240R 1% 1/16W	
R4032	061G0402273 JI	RST 0402 27K 5% 1/16W	
R7006	061G04023011FI	RST 0402 3.01K 1% 1/16W TA-I	
R120	061G0402303 JI	RST 0402 30K 5% 1/16W	
R7007	061G04023301FI	RST 0402 3.3K 1% 1/16W TA-I	
R4006	061G0402333 JT	RST CHIP 33K 1/16W 5% TZAI YUAN	
R5021	061G04023901FT	ST 0402 3.9K 1% 1/16W TZAI YUAN	
R7073	061G04024701FI	RST 0402 4.7K 1/16W 1% TA-I	
R160	061G0402472 JI	TEST ONLY RST CHIP 4.7K 5% 1/16W TA-I	
R4090	061G0402472 JI	TEST ONLY RST CHIP 4.7K 5% 1/16W TA-I	
R7079	061G0402472 JI	TEST ONLY RST CHIP 4.7K 5% 1/16W TA-I	
R4067	061G0402472 JI	TEST ONLY RST CHIP 4.7K 5% 1/16W TA-I	
R7078	061G0402472 JI	TEST ONLY RST CHIP 4.7K 5% 1/16W TA-I	
R4068	061G0402472 JI	TEST ONLY RST CHIP 4.7K 5% 1/16W TA-I	
R4040	061G0402472 JI	TEST ONLY RST CHIP 4.7K 5% 1/16W TA-I	
R7077	061G0402472 JI	TEST ONLY RST CHIP 4.7K 5% 1/16W TA-I	
R7045	061G0402472 JI	TEST ONLY RST CHIP 4.7K 5% 1/16W TA-I	
R4080	061G0402472 JI	TEST ONLY RST CHIP 4.7K 5% 1/16W TA-I	
R7027	061G0402472 JI	TEST ONLY RST CHIP 4.7K 5% 1/16W TA-I	
R4079	061G0402472 JI	TEST ONLY RST CHIP 4.7K 5% 1/16W TA-I	
R7029	061G0402472 JI	TEST ONLY RST CHIP 4.7K 5% 1/16W TA-I	
R7083	061G0402472 JI	TEST ONLY RST CHIP 4.7K 5% 1/16W TA-I	
R4043	061G0402472 JI	TEST ONLY RST CHIP 4.7K 5% 1/16W TA-I	
R4056	061G0402472 JI	TEST ONLY RST CHIP 4.7K 5% 1/16W TA-I	
R5010	061G0402472 JI	TEST ONLY RST CHIP 4.7K 5% 1/16W TA-I	
R4089	061G0402472 JI	TEST ONLY RST CHIP 4.7K 5% 1/16W TA-I	
R7084	061G0402472 JI	TEST ONLY RST CHIP 4.7K 5% 1/16W TA-I	
R5011	061G0402472 JI	TEST ONLY RST CHIP 4.7K 5% 1/16W TA-I	
R4054	061G0402472 JI	TEST ONLY RST CHIP 4.7K 5% 1/16W TA-I	
R4065	061G0402472 JI	TEST ONLY RST CHIP 4.7K 5% 1/16W TA-I	
R4091	061G0402472 JI	TEST ONLY RST CHIP 4.7K 5% 1/16W TA-I	
R101	061G0402472 JI	TEST ONLY RST CHIP 4.7K 5% 1/16W TA-I	
R4066	061G0402472 JI	TEST ONLY RST CHIP 4.7K 5% 1/16W TA-I	
R157	061G0402472 JI	TEST ONLY RST CHIP 4.7K 5% 1/16W TA-I	

R4085	061G0402472 JI	TEST ONLY RST CHIP 4.7K 5% 1/16W TA-I	
R133	061G0402472 JI	TEST ONLY RST CHIP 4.7K 5% 1/16W TA-I	
R7021	061G0402472 JI	TEST ONLY RST CHIP 4.7K 5% 1/16W TA-I	
R5012	061G0402472 JI	TEST ONLY RST CHIP 4.7K 5% 1/16W TA-I	
R4027	061G0402472 JI	TEST ONLY RST CHIP 4.7K 5% 1/16W TA-I	
R4050	061G0402472 JI	TEST ONLY RST CHIP 4.7K 5% 1/16W TA-I	
R4038	061G0402472 JI	TEST ONLY RST CHIP 4.7K 5% 1/16W TA-I	
R4025	061G0402472 JI	TEST ONLY RST CHIP 4.7K 5% 1/16W TA-I	
R4046	061G0402472 JI	TEST ONLY RST CHIP 4.7K 5% 1/16W TA-I	
R4058	061G0402472 JI	TEST ONLY RST CHIP 4.7K 5% 1/16W TA-I	
R7038	061G0402472 JI	TEST ONLY RST CHIP 4.7K 5% 1/16W TA-I	
R6016	061G0402472 JI	TEST ONLY RST CHIP 4.7K 5% 1/16W TA-I	
R4029	061G0402472 JI	TEST ONLY RST CHIP 4.7K 5% 1/16W TA-I	
R5013	061G0402472 JI	TEST ONLY RST CHIP 4.7K 5% 1/16W TA-I	
R4059	061G0402472 JI	TEST ONLY RST CHIP 4.7K 5% 1/16W TA-I	
R6003	061G0402472 JI	TEST ONLY RST CHIP 4.7K 5% 1/16W TA-I	
R159	061G0402472 JI	TEST ONLY RST CHIP 4.7K 5% 1/16W TA-I	
R4098	061G0402472 JT	RST CHIP 4K7 1/16W 5% TZAI YUAN	
R4082	061G0402472 JT	RST CHIP 4K7 1/16W 5% TZAI YUAN	
R6024	061G0402473 JI	TEST ONLY RST 0402 47K 5% 1/16W TA-I	
R121	061G0402473 JI	TEST ONLY RST 0402 47K 5% 1/16W TA-I	
R7063	061G0402473 JT	RST CHIP 47K 1/16W 5% TZAI YUAN	
R7064	061G0402473 JT	RST CHIP 47K 1/16W 5% TZAI YUAN	
R7023	061G04025602FI	RST 0402 56K 1% 1/16W TA-I	
R4034	061G0402622 JI	RST 0402 6.2K 5% 1/16W	
R181	061G0402682 JT	RST CHIP 6K8 1/16W 5% TZAI YUAN	
R153	061G0402682 JT	RST CHIP 6K8 1/16W 5% TZAI YUAN	
R151	061G0402682 JT	RST CHIP 6K8 1/16W 5% TZAI YUAN	
R182	061G0402682 JT	RST CHIP 6K8 1/16W 5% TZAI YUAN	
R138	061G0402750 JI	TEST ONLY RST 0402 75R 5% 1/16W TA-I	
R177	061G0402750 JI	TEST ONLY RST 0402 75R 5% 1/16W TA-I	
R162	061G0402750 JI	TEST ONLY RST 0402 75R 5% 1/16W TA-I	
R167	061G0402750 JI	TEST ONLY RST 0402 75R 5% 1/16W TA-I	
R148	061G0402750 JI	TEST ONLY RST 0402 75R 5% 1/16W TA-I	
R143	061G0402750 JI	TEST ONLY RST 0402 75R 5% 1/16W TA-I	
R7090	061G0603000 JI	RST 0603 0.05R MAX 1/10W TA-I	
R5016	061G0603000 JI	RST 0603 0.05R MAX 1/10W TA-I	
R7061	061G0603000 JI	RST 0603 0.05R MAX 1/10W TA-I	
R117	061G0603000 JI	RST 0603 0.05R MAX 1/10W TA-I	
R118	061G0603000 JI	RST 0603 0.05R MAX 1/10W TA-I	
R5015	061G0603000 JI	RST 0603 0.05R MAX 1/10W TA-I	
R7094	061G0603000 JI	RST 0603 0.05R MAX 1/10W TA-I	
R4035	061G0603000 JI	RST 0603 0.05R MAX 1/10W TA-I	
R5017	061G0603000 JI	RST 0603 0.05R MAX 1/10W TA-I	
R7062	061G0603000 JI	RST 0603 0.05R MAX 1/10W TA-I	
R5014	061G0603000 JI	RST 0603 0.05R MAX 1/10W TA-I	
R119	061G0603000 JI	RST 0603 0.05R MAX 1/10W TA-I	
R7060	061G0603000 JI	RST 0603 0.05R MAX 1/10W TA-I	
R7059	061G0603000 JI	RST 0603 0.05R MAX 1/10W TA-I	
R4057	061G0603000 JI	RST 0603 0.05R MAX 1/10W TA-I	
R7095	061G0603000 JI	RST 0603 0.05R MAX 1/10W TA-I	
R7085	061G06031000FY	RST CHIP 100R 1% 1/10W	
R7086	061G06031000FY	RST CHIP 100R 1% 1/10W	
R4092	061G0603101 JF	RST CHIPR 100 OHM +-5% 1/10W FENGHUA	

R6011	061G0603101 JF	RST CHIPR 100 OHM +-5% 1/10W FENGHUA	
R6031	061G0603102 JF	RST CHIPR 1K OHM +-5% 1/10W FENGHUA	
R6032	061G0603102 JF	RST CHIPR 1K OHM +-5% 1/10W FENGHUA	
R7003	061G0603103 JF	RST CHIPR 10K OHM +-5% 1/10W FENGHUA	
R6030	061G0603103 JF	RST CHIPR 10K OHM +-5% 1/10W FENGHUA	
R7009	061G0603103 JF	RST CHIPR 10K OHM +-5% 1/10W FENGHUA	
R7008	061G0603103 JF	RST CHIPR 10K OHM +-5% 1/10W FENGHUA	
R4030	061G0603103 JF	RST CHIPR 10K OHM +-5% 1/10W FENGHUA	
R7018	061G0603103 JF	RST CHIPR 10K OHM +-5% 1/10W FENGHUA	
R7020	061G0603103 JT	RST CHIP 10K 1/10W 5% TZAI YUAN	
R7013	061G0603103 JY	RST CHIPR 10KOHM £«-5£¥ 1/10W YAGEO	
R733	061G0603103 JY	RST CHIPR 10KOHM £«-5£¥ 1/10W YAGEO	
R4028	061G0603104 JF	RST CHIPR 100KOHM 5% 1/10W FENGHUA	
R7012	061G0603104 JF	RST CHIPR 100KOHM 5% 1/10W FENGHUA	
R7022	061G0603104 JF	RST CHIPR 100KOHM 5% 1/10W FENGHUA	
R4026	061G0603473 JF	RST CHIPR 47KOHM +-5% 1/10W FENGHUA	
R7011	061G0603473 JF	RST CHIPR 47KOHM +-5% 1/10W FENGHUA	
R106	061G0603511 JI	RST CHIP 510R 1/10W 5% TA-I	
R107	061G0603511 JI	RST CHIP 510R 1/10W 5% TA-I	
R6029	061G0805000 JF	RST CHIPR 0 OHM +-5% 1/8W FENGHUA	
R6028	061G0805000 JF	RST CHIPR 0 OHM +-5% 1/8W FENGHUA	
R6019	061G1206100 JT	RST CHIPR 10 OHM +-5% 1/4W TZAI YUAN	
R4022	061G1206152 JF	3ST CHIPR 1.5KOHM +-5% 1/4W FENGHUA	
C112	065G040210031J F	CAP 0402 10PF 5% 50V NP0	
C113	065G040210031J F	CAP 0402 10PF 5% 50V NP0	
C6008	065G040210131J Y	CAP CHIP 0402 100P 50V NP0 +/-5%	
C6022	065G040210131J Y	CAP CHIP 0402 100P 50V NP0 +/-5%	
C6003	065G040210232K Y	CAP 0402 1NF 10% 50V X7R CC0402KRX7R9BB	
C6028	065G040210232K Y	CAP 0402 1NF 10% 50V X7R CC0402KRX7R9BB	
C118	065G040210232K Y	CAP 0402 1NF 10% 50V X7R CC0402KRX7R9BB	
C114	065G040210332K F	CAP 0402 10NF 10% 50V X7R	
C103	065G040210332K F	CAP 0402 10NF 10% 50V X7R	
C105	065G040210332K F	CAP 0402 10NF 10% 50V X7R	
C4105	065G040210332K Y	CAP CHIP 0402 10N 50V X7R +/-10%	
C4002	065G040210412K A	CAP CHIP 0402 100NF K 16V X7R	
C4018	065G040210412K F	CAP 0402 100NF 10% 16V X7R	
C4055	065G040210412K F	CAP 0402 100NF 10% 16V X7R	
C4085	065G040210412K F	CAP 0402 100NF 10% 16V X7R	
C4017	065G040210412K F	CAP 0402 100NF 10% 16V X7R	
C4084	065G040210412K F	CAP 0402 100NF 10% 16V X7R	
C4068	065G040210412K F	CAP 0402 100NF 10% 16V X7R	
C4012	065G040210412K F	CAP 0402 100NF 10% 16V X7R	
C4052	065G040210412K F	CAP 0402 100NF 10% 16V X7R	
C4016	065G040210412K F	CAP 0402 100NF 10% 16V X7R	
C4063	065G040210412K F	CAP 0402 100NF 10% 16V X7R	
C4072	065G040210412K F	CAP 0402 100NF 10% 16V X7R	
C7060	065G040210412K F	CAP 0402 100NF 10% 16V X7R	
C4066	065G040210412K F	CAP 0402 100NF 10% 16V X7R	
C4083	065G040210412K F	CAP 0402 100NF 10% 16V X7R	
C4001	065G040210412K F	CAP 0402 100NF 10% 16V X7R	
C4008	065G040210412K F	CAP 0402 100NF 10% 16V X7R	
C4014	065G040210412K F	CAP 0402 100NF 10% 16V X7R	
C4088	065G040210412K F	CAP 0402 100NF 10% 16V X7R	
C4074	065G040210412K F	CAP 0402 100NF 10% 16V X7R	

C4081	065G040210412K	F	CAP 0402 100NF 10% 16V X7R	
C111	065G040210412K	F	CAP 0402 100NF 10% 16V X7R	
C4086	065G040210412K	F	CAP 0402 100NF 10% 16V X7R	
C104	065G040210412K	F	CAP 0402 100NF 10% 16V X7R	
C4059	065G040210412K	F	CAP 0402 100NF 10% 16V X7R	
C4049	065G040210412K	F	CAP 0402 100NF 10% 16V X7R	
C4058	065G040210412K	F	CAP 0402 100NF 10% 16V X7R	
C4069	065G040210412K	F	CAP 0402 100NF 10% 16V X7R	
C4011	065G040210412K	F	CAP 0402 100NF 10% 16V X7R	
C4054	065G040210412K	F	CAP 0402 100NF 10% 16V X7R	
C4064	065G040210412K	F	CAP 0402 100NF 10% 16V X7R	
C4071	065G040210412K	F	CAP 0402 100NF 10% 16V X7R	
C4034	065G040210412K	F	CAP 0402 100NF 10% 16V X7R	
C4070	065G040210412K	F	CAP 0402 100NF 10% 16V X7R	
C102	065G040210412K	F	CAP 0402 100NF 10% 16V X7R	
C4087	065G040210412K	F	CAP 0402 100NF 10% 16V X7R	
C4019	065G040210412K	F	CAP 0402 100NF 10% 16V X7R	
C4065	065G040210412K	F	CAP 0402 100NF 10% 16V X7R	
C4015	065G040210412K	F	CAP 0402 100NF 10% 16V X7R	
C4007	065G040210412K	F	CAP 0402 100NF 10% 16V X7R	
C4057	065G040210412K	F	CAP 0402 100NF 10% 16V X7R	
C4067	065G040210412K	F	CAP 0402 100NF 10% 16V X7R	
C4013	065G040210412K	F	CAP 0402 100NF 10% 16V X7R	
C6002	065G040210412K	Y	CAP 0402 100NF 10% 16V X7R	
C4110	065G040210412K	Y	CAP 0402 100NF 10% 16V X7R	
C4101	065G040210412K	Y	CAP 0402 100NF 10% 16V X7R	
C4100	065G040210412K	Y	CAP 0402 100NF 10% 16V X7R	
C7019	065G040210412K	Y	CAP 0402 100NF 10% 16V X7R	
C7006	065G040210412K	Y	CAP 0402 100NF 10% 16V X7R	
C4104	065G040210412K	Y	CAP 0402 100NF 10% 16V X7R	
C7012	065G040210412K	Y	CAP 0402 100NF 10% 16V X7R	
C7023	065G040210412K	Y	CAP 0402 100NF 10% 16V X7R	
C5005	065G040210412K	Y	CAP 0402 100NF 10% 16V X7R	
C7017	065G040210412K	Y	CAP 0402 100NF 10% 16V X7R	
C4109	065G040210412K	Y	CAP 0402 100NF 10% 16V X7R	
C7038	065G040210412K	Y	CAP 0402 100NF 10% 16V X7R	
C7057	065G040210412K	Y	CAP 0402 100NF 10% 16V X7R	
C7020	065G040210412K	Y	CAP 0402 100NF 10% 16V X7R	
C4005	065G040210412K	Y	CAP 0402 100NF 10% 16V X7R	
C7054	065G040210412K	Y	CAP 0402 100NF 10% 16V X7R	
C4108	065G040210412K	Y	CAP 0402 100NF 10% 16V X7R	
C7014	065G040210412K	Y	CAP 0402 100NF 10% 16V X7R	
C7022	065G040210412K	Y	CAP 0402 100NF 10% 16V X7R	
C116	065G040210425K	M	CAP 0402 100NF 10% 25V X5R	
C7004	065G040210425K	T	CAP 0402 100NF 10% 25V X5R	
C4076	065G0402105A5K	A	CAP CHIP 0402 1UF K 10V X5R	
C4080	065G0402105A5K	A	CAP CHIP 0402 1UF K 10V X5R	
C7059	065G0402105A5K	A	CAP CHIP 0402 1UF K 10V X5R	
C7035	065G0402105A5K	M	CAP 0402 1UF 10% 10V X5R	
C119	065G0402105A5K	M	CAP 0402 1UF 10% 10V X5R	
C131	065G0402105A5K	M	CAP 0402 1UF 10% 10V X5R	
C127	065G0402105A5K	M	CAP 0402 1UF 10% 10V X5R	
C7050	065G0402105A5K	M	CAP 0402 1UF 10% 10V X5R	
C4050	065G040215031J	T	CAP CHIP 0402 15PF 50V J NPO	

C4051	065G040215031J	T	CAP CHIP 0402 15PF 50V J NPO	
C130	065G040220031J	F	CAP 0402 20PF 5% 50V NP0	
C129	065G040220031J	F	CAP 0402 20PF 5% 50V NP0	
C146	065G040222031J	T	CAP 0402 22PF 5% 50V NP0 UMK105 CG220JV	
C4091	065G0402224A5K	M	CAP 0402 0.22UF 10V X5R	
C4089	065G0402224A5K	M	CAP 0402 0.22UF 10V X5R	
C126	065G040233031J	F	CAP 0402 33PF 5% 50V NP0	
C125	065G040233031J	F	CAP 0402 33PF 5% 50V NP0	
C6007	065G040233131J	Y	0402 330PF J 50V NPO	
C6013	065G040233131J	Y	0402 330PF J 50V NPO	
C6025	065G040233131J	Y	0402 330PF J 50V NPO	
C6017	065G040233131J	Y	0402 330PF J 50V NPO	
C138	065G040247131J	A	CAP CHIP 0402 470PF J 50V NPO	
C150	065G040247131J	A	CAP CHIP 0402 470PF J 50V NPO	
C139	065G040247131J	A	CAP CHIP 0402 470PF J 50V NPO	
C149	065G040247131J	A	CAP CHIP 0402 470PF J 50V NPO	
C4027	065G040247312K	T	CAP 0402 47NF 10% 16V X7R	
C4026	065G040247312K	T	CAP 0402 47NF 10% 16V X7R	
C4028	065G040247312K	T	CAP 0402 47NF 10% 16V X7R	
C4032	065G040247312K	T	CAP 0402 47NF 10% 16V X7R	
C4031	065G040247312K	T	CAP 0402 47NF 10% 16V X7R	
C4025	065G040247312K	T	CAP 0402 47NF 10% 16V X7R	
C4030	065G040247312K	T	CAP 0402 47NF 10% 16V X7R	
C4029	065G040247312K	T	CAP 0402 47NF 10% 16V X7R	
C4024	065G040247312K	T	CAP 0402 47NF 10% 16V X7R	
C135	065G040250931C	F	CAP 0402 5PF 0.25PF 50V NP0	
C145	065G040250931C	F	CAP 0402 5PF 0.25PF 50V NP0	
C144	065G040250931C	F	CAP 0402 5PF 0.25PF 50V NP0	
C137	065G040250931C	F	CAP 0402 5PF 0.25PF 50V NP0	
C143	065G040250931C	F	CAP 0402 5PF 0.25PF 50V NP0	
C136	065G040250931C	F	CAP 0402 5PF 0.25PF 50V NP0	
C147	065G060310031J	F	CAP 0603 10PF 5% 50V NP0	
C6033	065G060310432K	A	CAP 0603 100NF 10% 50V X7R	
C4106	065G060310432K	A	CAP 0603 100NF 10% 50V X7R	
C6031	065G060310432K	A	CAP 0603 100NF 10% 50V X7R	
C7011	065G060310432K	F	CAP CHIP 0603 0.1UF K 50V X7R	
C6029	065G060310432K	F	CAP CHIP 0603 0.1UF K 50V X7R	
C4102	065G060310432K	F	CAP CHIP 0603 0.1UF K 50V X7R	
C7016	065G060310432K	F	CAP CHIP 0603 0.1UF K 50V X7R	
C4103	065G060310432K	F	CAP CHIP 0603 0.1UF K 50V X7R	
C7026	065G060310432K	F	CAP CHIP 0603 0.1UF K 50V X7R	
C6004	065G060310432K	F	CAP CHIP 0603 0.1UF K 50V X7R	
C7003	065G060310432K	F	CAP CHIP 0603 0.1UF K 50V X7R	
C6023	065G060310512K	T	CAP 0603 1UF 10% 16V X7R EMK107B7105KA	
C6006	065G060310512K	T	CAP 0603 1UF 10% 16V X7R EMK107B7105KA	
C6009	065G060310512K	T	CAP 0603 1UF 10% 16V X7R EMK107B7105KA	
C4010	065G060310512K	T	CAP 0603 1UF 10% 16V X7R EMK107B7105KA	
C6021	065G060310512K	T	CAP 0603 1UF 10% 16V X7R EMK107B7105KA	
C4033	065G060310512K	T	CAP 0603 1UF 10% 16V X7R EMK107B7105KA	
C4090	065G060310522K	M	CAP MLCC 0603 1UF K 25V X7R	
C4003	065G060310605M	M	CAP 0603 10UF 20% 6.3V X5R	
C4073	065G060310605M	T	CAP 0603 10UF 20% 6.3V X5R	
C4020	065G060310605M	T	CAP 0603 10UF 20% 6.3V X5R	
C4060	065G060310605M	T	CAP 0603 10UF 20% 6.3V X5R	

C4077	065G060310605M T	CAP 0603 10UF 20% 6.3V X5R	
C4009	065G060310605M T	CAP 0603 10UF 20% 6.3V X5R	
C4056	065G060310605M T	CAP 0603 10UF 20% 6.3V X5R	
C4053	065G060310605M T	CAP 0603 10UF 20% 6.3V X5R	
C4021	065G060310605M T	CAP 0603 10UF 20% 6.3V X5R	
C7063	065G060310605M T	CAP 0603 10UF 20% 6.3V X5R	
C4006	065G060322515K M	CAP 0603 2.2UF 10% 16V X5R	
C117	065G060347131J Y	CAP CHIP 0603 470P 50V NP0 +/-5%	
C6014	065G080510532K A	CAP 0805 1UF 10% 50V X7R	
C6010	065G080510532K A	CAP 0805 1UF 10% 50V X7R	
C6019	065G080510532K A	CAP 0805 1UF 10% 50V X7R	
C6026	065G080510532K A	CAP 0805 1UF 10% 50V X7R	
C7013	065G0805106A5K A	CAP 0805 10UF 10% 10V X5R	
C7025	065G0805106A5K A	CAP 0805 10UF 10% 10V X5R	
C7037	065G0805106A5K A	CAP 0805 10UF 10% 10V X5R	
C7053	065G0805106A5K A	CAP 0805 10UF 10% 10V X5R	
C7018	065G0805106A5K A	CAP 0805 10UF 10% 10V X5R	
C716	065G0805106A5K A	CAP 0805 10UF 10% 10V X5R	
C7056	065G0805106A5K A	CAP 0805 10UF 10% 10V X5R	
C7055	065G0805106A5K A	CAP 0805 10UF 10% 10V X5R	
C7024	065G0805106A5K A	CAP 0805 10UF 10% 10V X5R	
C6024	065G080522432K Y	CAP CHIP 0805 220N 50V X7R +/-10%	
C6012	065G080522432K Y	CAP CHIP 0805 220N 50V X7R +/-10%	
C6001	065G080522432K Y	CAP CHIP 0805 220N 50V X7R +/-10%	
C6016	065G080522432K Y	CAP CHIP 0805 220N 50V X7R +/-10%	
C7058	065G080522512K A	CAP 0805 2.2UF 10% 16V X7R	
C4075	065G080522605M T	CAP 0805 22UF 20% 6.3V X5R JMK212 BJ226	
C6020	065G120610532K M	CAP CHIP 1206 1UF K 50V X7R	
C6018	065G120610532K M	CAP CHIP 1206 1UF K 50V X7R	
C6015	065G120610532K M	CAP CHIP 1206 1UF K 50V X7R	
C7009	065G120622532K M	CAP 1206 2.2UF 10% 50V X7R	
C7010	065G120622532K M	CAP 1206 2.2UF 10% 50V X7R	
C6032	065G120622615K M	AP CHIP 1206 22UF K 16V X5R	
C7036	065G120622615K M	AP CHIP 1206 22UF K 16V X5R	
C6030	065G120622615K M	AP CHIP 1206 22UF K 16V X5R	
C7002	065G121010622K M	CAP 1210 10UF 10% 25V X7R	
C7052	067G 3112213CT	EC SMD 220UF 16V HV 6.3*7.7	
C7015	067G 3112213CT	EC SMD 220UF 16V HV 6.3*7.7	
C4004	067G 3112213CT	EC SMD 220UF 16V HV 6.3*7.7	
C110	067G311C1013CT	EC SMD 100UF 20% 16V RV 6.3*7.7	
C7008	067G311C1013CT	EC SMD 100UF 20% 16V RV 6.3*7.7	
C120	067G311C1013CT	EC SMD 100UF 20% 16V RV 6.3*7.7	
C6011	067G311R1014CT	EC 100UF 20% 25V 6.3*7.7	
HDCP-U407	070GHDCP500HDC	HDCP CODE	
FB7009	071G 56A221 TA	IND FXD 0805 EMI 100MHZ 220R R	
FB6002	071G 56D221 M	CHIP BEAD 0805 220R 25% 3000MA	
FB7002	071G 56K121 TA	CHIP BEAD 120R/6000MA HCB2012KF-121T60	
FB4007	071G 56K121 TA	CHIP BEAD 120R/6000MA HCB2012KF-121T60	
FB4004	071G 56K121 TA	CHIP BEAD 120R/6000MA HCB2012KF-121T60	
FB7003	071G 56K121 TA	CHIP BEAD 120R/6000MA HCB2012KF-121T60	
FB7012	071G 56K121 TA	CHIP BEAD 120R/6000MA HCB2012KF-121T60	
FB7005	071G 56K121 TA	CHIP BEAD 120R/6000MA HCB2012KF-121T60	
FB7004	071G 56K121 TA	CHIP BEAD 120R/6000MA HCB2012KF-121T60	
FB7007	071G 59A121 TA	CHIP BEAD 120R/3000MA HCB1608KF-121T30	

FB7017	071G 59A121 TA	CHIP BEAD 120R/3000MA HCB1608KF-121T30	
FB4014	071G 59A121 TA	CHIP BEAD 120R/3000MA HCB1608KF-121T30	
FB4012	071G 59A121 TA	CHIP BEAD 120R/3000MA HCB1608KF-121T30	
FB4010	071G 59A121 TA	CHIP BEAD 120R/3000MA HCB1608KF-121T30	
FB4011	071G 59A121 TA	CHIP BEAD 120R/3000MA HCB1608KF-121T30	
FB7013	071G 59A121 TA	CHIP BEAD 120R/3000MA HCB1608KF-121T30	
FB4001	071G 59A121 TA	CHIP BEAD 120R/3000MA HCB1608KF-121T30	
FB4013	071G 59A121 TA	CHIP BEAD 120R/3000MA HCB1608KF-121T30	
FB7015	071G 59A121 TA	CHIP BEAD 120R/3000MA HCB1608KF-121T30	
FB4025	071G 59A121 TA	CHIP BEAD 120R/3000MA HCB1608KF-121T30	
FB7016	071G 59A121 TA	CHIP BEAD 120R/3000MA HCB1608KF-121T30	
FB4017	071G 59A121 TA	CHIP BEAD 120R/3000MA HCB1608KF-121T30	
FB4022	071G 59A121 TA	CHIP BEAD 120R/3000MA HCB1608KF-121T30	
FB4015	071G 59A121 TA	CHIP BEAD 120R/3000MA HCB1608KF-121T30	
FB7006	071G 59A121 TA	CHIP BEAD 120R/3000MA HCB1608KF-121T30	
FB4024	071G 59A121 TA	CHIP BEAD 120R/3000MA HCB1608KF-121T30	
FB4023	071G 59A121 TA	CHIP BEAD 120R/3000MA HCB1608KF-121T30	
FB4008	071G 59A121 TA	CHIP BEAD 120R/3000MA HCB1608KF-121T30	
FB7011	071G 59A121 TA	CHIP BEAD 120R/3000MA HCB1608KF-121T30	
FB4016	071G 59A121 TA	CHIP BEAD 120R/3000MA HCB1608KF-121T30	
FB4020	071G 59A121 TA	CHIP BEAD 120R/3000MA HCB1608KF-121T30	
FB4021	071G 59A121 TA	CHIP BEAD 120R/3000MA HCB1608KF-121T30	
FB4002	071G 59D121 TA	CHIP BEAD 120R/600MA FCM1608KF-121T06	
L109	073G 63108CJT	CHIP IND 0.1UH 5% 0.3A 1R MLG1608BR10JT	
L110	073G 6333810M	CHIP INDUCTOR 0.33UH 10% 0.75R 100MA	
L108	073G 63478 5T	CHIP IND 0.47UH 5% 100MA 3.5R MLG1608SR	
L104	073G 63478 5T	CHIP IND 0.47UH 5% 100MA 3.5R MLG1608SR	
L6005	073G253S 61 T	SMD CHOKE 2.2UH 30% 0.0217R	
L6006	073G253S 61 T	SMD CHOKE 2.2UH 30% 0.0217R	
L6002	073G253S 89 M	SMD CHOKE 22UH 20% 0.0723R 2.6A	
L6001	073G253S 89 M	SMD CHOKE 22UH 20% 0.0723R 2.6A	
L6004	073G253S 89 M	SMD CHOKE 22UH 20% 0.0723R 2.6A	
L6003	073G253S 89 M	SMD CHOKE 22UH 20% 0.0723R 2.6A	
L103	073G253S901 T	SMD CHOKE - - 90R ACM2012-900-2P	
L102	073G253S901 T	SMD CHOKE - - 90R ACM2012-900-2P	
CN506	088G 34019K AT	HDMI HEADER R/A 19P BLACK H=8.4	
CN501	088G 34021A VA	HDMI V/T 21P 1*1 BLACK 10.5MM	
D101	093G 60505	SCHOTTKY BAT54C 0.2A 30V SOT-23	
ZD118	093G 64 37 N	VPORT0603100KV05	
ZD121	093G 64 37 N	VPORT0603100KV05	
ZD115	093G 64 37 N	VPORT0603100KV05	
ZD122	093G 64 37 N	VPORT0603100KV05	
ZD403	093G 64 37 N	VPORT0603100KV05	
ZD123	093G 64 37 N	VPORT0603100KV05	
ZD130	093G 64 37 N	VPORT0603100KV05	
ZD120	093G 64 37 N	VPORT0603100KV05	
ZD106	093G 64 37 N	VPORT0603100KV05	
ZD103	093G 64 37 N	VPORT0603100KV05	
ZD109	093G 64 37 N	VPORT0603100KV05	
ZD119	093G 64 37 N	VPORT0603100KV05	
ZD124	093G 64 37 N	VPORT0603100KV05	
ZD107	093G 64 37 N	VPORT0603100KV05	
ZD108	093G 64 37 N	VPORT0603100KV05	
ZD110	093G 64 37 N	VPORT0603100KV05	

ZD401	093G 64 37 N	VPORT0603100KV05	
ZD404	093G 64 37 N	VPORT0603100KV05	
ZD104	093G 64 37 N	VPORT0603100KV05	
ZD113	093G 64 37 N	VPORT0603100KV05	
ZD112	093G 64 37 N	VPORT0603100KV05	
ZD402	093G 64 37 N	VPORT0603100KV05	
ZD117	093G 64 37 N	VPORT0603100KV05	
ZD105	093G 64 37 N	VPORT0603100KV05	
ZD116	093G 64 37 N	VPORT0603100KV05	
ZD111	093G 64 37 N	VPORT0603100KV05	
ZD114	093G 39S911 T	ZENER BZX84-C5V6 5.6V 0.25W SOT-23	
ZD505	093G 64S500 SU	ESD MLVG04025R0QV05BP INPAQ	
ZD504	093G 64S500 SU	ESD MLVG04025R0QV05BP INPAQ	
ZD503	093G 64S500 SU	ESD MLVG04025R0QV05BP INPAQ	
ZD602	093G 64S500 SU	ESD MLVG04025R0QV05BP INPAQ	
ZD603	093G 64S500 SU	ESD MLVG04025R0QV05BP INPAQ	
ZD601	093G 64S500 SU	ESD MLVG04025R0QV05BP INPAQ	
ZD506	093G 64S500 SU	ESD MLVG04025R0QV05BP INPAQ	
ZD501	093G 64S500 SU	ESD MLVG04025R0QV05BP INPAQ	
ZD502	093G 64S500 SU	ESD MLVG04025R0QV05BP INPAQ	
D6001	093G 64S900 T	DIODE BAS316 SOD-323 PHILIPS	
D6003	093G 64S900 T	DIODE BAS316 SOD-323 PHILIPS	
D102	093G 64S904 T	SWITCHING BAS316RRG 4A 100V SOD323	
CN402	311GW125D03AAX	CONN 1.25MM 3P	
CN408	311GW125F40ACH	WAFER 1.25MM 40P V/T A12511WVA-SF-2*20PN	
CN701	311GW200A13ADJ	WAFER 2.0MM 13P T20038A-13-H011	
CN601	311GW250B04ADX	WAFER 2.5MM 4P R/A S2415-04RWA-K	
U401	356G0568216015	SCALER RTD2958IG-GR LQFP-216	
U701	356GD563005142	DC/DC AP3417CKTR-G1 1A 0.6V~0.9VIN SOT-2	
C4082	365G040222505M000T	CAP 0402 2.2UF 20% 6.3V X5R JMK105BJ225M	
C4078	365G040222505M000T	CAP 0402 2.2UF 20% 6.3V X5R JMK105BJ225M	
C4079	365G040222505M000T	CAP 0402 2.2UF 20% 6.3V X5R JMK105BJ225M	
C4042	365G0603225A2K000A	CAP 0603 2.2UF 10% 10V X7R	
C4038	365G0603225A2K000A	CAP 0603 2.2UF 10% 10V X7R	
C4037	365G0603225A2K000A	CAP 0603 2.2UF 10% 10V X7R	
C4044	365G0603225A2K000A	CAP 0603 2.2UF 10% 10V X7R	
C4041	365G0603225A2K000A	CAP 0603 2.2UF 10% 10V X7R	
C4043	365G0603225A2K000A	CAP 0603 2.2UF 10% 10V X7R	
C6027	367G311X101GCT	EC SMD 100UF/35V 20% 35V 6.3X7.7 2000 HR	
C6005	367G311X101GCT	EC SMD 100UF/35V 20% 35V 6.3X7.7 2000 HR	
C7062	367G311X101GCT	EC SMD 100UF/35V 20% 35V 6.3X7.7 2000 HR	
C7061	367G311X101GCT	EC SMD 100UF/35V 20% 35V 6.3X7.7 2000 HR	
X401	393G022SA35TXC	CRYSTAL --7M27000021 --10PPM --10PF	
	709T58010XS001C	COMSUMPTIVE ASSY	
	052G 2191 A	TAPE_OTHER(PET,PAPER,SECURITY,ETC…)	
	055G 100610	TIN CREAM W/O PB	
	Q52G170100700B00XW	MESH PRINTTING_PAPER	
E715	715G5801M0E000004K	MAIN BOARD PCB	
	Q45G7701009A0100HB	LLDPE WRAP	
	KEPFDXC1C	KEY BOARD	
CN01	033G8032 4F HR	CONNECTOR 4P 1.25	
R05	061G04021001FI	RST 0402 1K 1% 1/16W TA-I	
R04	061G04022201FI	RST CHIPR 2.2KOHM +-1% 1/16W TA-I	
R01	061G04022202FI	RST 0402 22K 1% 1/16W TA-I	

R07	061G04023301FI	RST 0402 3.3K 1% 1/16W TA-I	
R06	061G04023301FI	RST 0402 3.3K 1% 1/16W TA-I	
R03	061G04024301FT	RST CHIP 4K3 1/16W 1%	
R02	061G04028201FI	RST 0402 8.2K 1% 1/16W TA-I	
SW05	077G 607 2 FD	CHIP TACT SW BY FORWARD SFKQGMA2125T-PL	
SW01	077G 607 2 FD	CHIP TACT SW BY FORWARD SFKQGMA2125T-PL	
SW03	077G 607 2 FD	CHIP TACT SW BY FORWARD SFKQGMA2125T-PL	
SW04	077G 607 2 FD	CHIP TACT SW BY FORWARD SFKQGMA2125T-PL	
SW06	077G 607 2 FD	CHIP TACT SW BY FORWARD SFKQGMA2125T-PL	
SW02	077G 607 2 FD	CHIP TACT SW BY FORWARD SFKQGMA2125T-PL	
SW07	077G 607 2 FD	CHIP TACT SW BY FORWARD SFKQGMA2125T-PL	
SW07	077G 607 2 HC	TACT SW 4P 1.5MM 160G TS-4402-1.58B-01	
SW02	077G 607 2 HC	TACT SW 4P 1.5MM 160G TS-4402-1.58B-01	
SW06	077G 607 2 HC	TACT SW 4P 1.5MM 160G TS-4402-1.58B-01	
SW04	077G 607 2 HC	TACT SW 4P 1.5MM 160G TS-4402-1.58B-01	
SW03	077G 607 2 HC	TACT SW 4P 1.5MM 160G TS-4402-1.58B-01	
SW05	077G 607 2 HC	TACT SW 4P 1.5MM 160G TS-4402-1.58B-01	
SW01	077G 607 2 HC	TACT SW 4P 1.5MM 160G TS-4402-1.58B-01	
	709T64730XS001C	COMSUMPTIVE ASSY	
E715	715G6473K01000004F	KEY BOARD PCB	
	IRPFDXC4C	IR BOARD	
R204	061G0603101 JT	RST CHIP 100R 1/10W 5% TZAI YUAN	
R201	061G0603153 JY	RST CHIPR 15KOHM 1/10W YAGEO	
R203	061G0603221 JF	ST CHIPR 220 OHM +-5% 1/10W FENGHUA	
C201	065G060322515K T	CAP 0603 2.2UF 10% 16V X5R	
LED201	081G 15 3 GP	CHIP LED BLUE/RED GPTD12048BRC1-AR	
CN201	311GW125D05ACX	WAFER 1.25MM 5P V/T S1315-05SVB-S03-R	
U201	356GS927038002	SMD IR RECEIVER --IRM- V838M3/TR1 --38	
U201	356GS927038006	SMD IR RECEIVER TSOP75438TR 38 KHZ	
	709T64490XS01C	COMSUMPTIVE ASSY	
	715G6449R01000004F	IR BOARD PCB	
	705TXDBCPF3	705 ASS'Y FOR BRAZIL PACKING	
	045G 77500	BARCODE RIBBON	
	045G 77501	BAR CODE RIBBON X300X75	
	085T 583113	GASKET	
	092GB1JX1A3EGC	BATTERY 1.5V LR03 AAA£¨LR03£© ALKALI	
	0M1G1030 6120	SCREW 3X6	
	0M1G1030 6120	SCREW 3X6	
	0M1G1030 6120	SCREW 3X6	
	0M1G1030 8120	SCREW	
	0M1G1740 16 47 CR3	SCREW	
	0Q1G 330 8 47 CR3	SCREW 3X8	
	0Q1G 930 10 47 CR3	SCREW M3X10	
	0Q1G 930 10 47 CR3	SCREW M3X10	
	0Q1G 930 10 47 CR3	SCREW M3X10	
SP01	378G0035566YAK	8 OHM 3.5W --100X27 --100 NO	
E38901	389G224A12N0IS	AC POWER CORD 1200 FOR BRAZIL	
ECN601	395G801304XC16	HARNESS 4P TO 2P+2P 200MM+200MM	
ECN701	395G801313XM73	HARNESS 13P-13P 100	
ECN8101	395G801406XY11	HARNESS 6P-6P 260	
ECN408	395G801830XC12	LVDS CABLE 40P TO 30P 230MM	
ECN401	395G802210XC05	HARNESS 10P TO 4P+5P 500MM+450MM	
	398GRABD7NEACR	REMOTE AOC RC2414704/01 ENGLISH	
	705TXDCK016	BASE SCREW ASS'Y	

	0Q1G 940 18 47 CR3	SCREW	
	Q45G88010TV08900X1	PROTECT BAG	
	X40G0001624 2A	LABEL FOR SCREW PE BAG	
	709G00XP000013	COMSUMPTIVE ASSY	
	052G 1185	MIDDLE TAPE (Y1200141)	
	052G 1185	MIDDLE TAPE (Y1200141)	
	052G 1185	MIDDLE TAPE (Y1200141)	
	Q45G 99606 24 ESD	INSULATING PE BAG	
E750	750GBV236E22D1N000	LCD TPM236H3-HGEL02 C2D FQ TPV	
	PLTVDE631UXC3	POWER BOARD	
	Z40G0002ALL01A	OTHER LABEL	
IC9102	056G 139 8	PHOTO-COUPLER PS2561DL1-1 CTR Q100~200%	
IC9102	056G 139 9	IC EL817M(X) PHOTOCOUPLER DIP-4	
NR9902	061G 58005 W	NTCR 5R 20% 3A THINKING	
C9901	063G107M47410M	CAP X2 470NF 20% 275V R46KI3470HAP1M	
FB9909	071G 55 21	FERRITE BEAD	
FB9909	071G 55 21 H1	BEAD 6.0*10 700R 25% BF-I60100R-706B	
L9901	073G 174192 L	LINE FILTER 30MH MIN LF-013589-2	
L9901	073G 174192 X	LINE FILTER 30MH MIN ET20 0.8A	
L8102	073G 253214 H	CHOKE COIL 47UH 10% L470R HA	
L8102	073G 253214 X	CHOKE COIL 47UH 10% ,HF	
F9901	084G 41 15 C	FUSE 3.15A 250V UDA-A3.15(PF)	
F9901	084G 41 15 L	FUSE 3.15A 250V 0215 3.15MXEP	
CN9901	087G 50147C DL	AC SOCKET V/T 2P ACT1MD-02BL4B006 H=14	
CN9901	087G 50147C HC	AC SOCKET V/T 2P DB-8-01 H=14MM	
D9109	093G 60334	SCHOTTKY SR506-44 5A 60V DO-201AD	
D9108	093G 60334	SCHOTTKY SR506-44 5A 60V DO-201AD	
D9113	093G 60335 HF	SCHOTTKY SR515-04 X0G 5A 150V DO-201AD	
D9111	093G 60335 HF	SCHOTTKY SR515-04 X0G 5A 150V DO-201AD	
D9108	093G 60519	DIODE SR560-MK23 5A/60V DO-27 SECOS	
D9109	093G 60519	DIODE SR560-MK23 5A/60V DO-27 SECOS	
CN9901	0Q1G 340 8140	SCREW Q1-SELF TAPING SCREW :Q X8.0	
CN8101	311GW200A06ABX	WAFER 2.0MM 6P	
CN9904	311GW250B13BBX	WAFER 2.5MM 13P R/A 35MM 7MM	
RV9901	361G0046621KZW	VARISTOR 620V 10%	
C9102	367G215X470PKZ002S	.C 47UF 20% 450V 12.5*36 2000 HR 420MA P	
C9101	367G215X470PKZ002S	.C 47UF 20% 450V 12.5*36 2000 HR 420MA P	
L9101	373G0253247H00	CHOKE COIL 3UH 15% DR8*8 5A	
L9102	373G0253247H00	CHOKE COIL 3UH 15% DR8*8 5A	
L9102	373G0253247X00	CHOKE COIL 3UH 15% DR8*8 5A	
L9101	373G0253247X00	CHOKE COIL 3UH 15% DR8*8 5A	
T9101	380GL19P048H00	X'FMR 800UH 8% 20UH EFD30 BCK-13029-HA	
T9101	380GL19P048N00	X'FMR 800UH 8% 20UH EFD30 YUVA-2069	
BD9101	393G0050460A05	BRIDGE GBL08-07 X0 4A 800V GBL	
D8101	393G0060A0400T	SCHOTTKY SR310-29 X0 3A 100V DO-201AD	
	705TXC57044	Q9101 ASS'Y	
Q9101_1	0M1G 930 8120	SCREW 3X8	
Q9101	357G0667650002	MOSFET TK5A65D 5A 650V TO220F	
HS9101	Q90G0219 4	HEAT SINK ÐÍ²Ä/PROFILE	
IC9103	056G 158501	IC AS431AN-E1 SOT23	
IC8501	056G 700 34	LED DRIVER PF7001S SOP-14	
Q8101	057G 763125	MOSFET AO4486 4.2A 100V SO-8	
R9143	061G0805000 JT	RST 0805 0.05R MAX 1/8W	
R9142	061G0805000 JT	RST 0805 0.05R MAX 1/8W	

R8103	061G0805000 JT	RST 0805 0.05R MAX 1/8W	
R9131	061G0805102 JT	RST CHIPR 1K OHM +- 5% 1/8W TZAI YUAN	
R8106	061G0805103 JT	RST 0805 10K 5% 1/8W	
R9124	061G0805103 JT	RST 0805 10K 5% 1/8W	
R9111	061G0805103 JT	RST 0805 10K 5% 1/8W	
R9114	061G0805104 JT	RST CHIPR 100KOHM +- 5% 1/8W TZAI YUAN	
R8111	061G08051302FT	RST CHIP 13K 1/8W 1%	
R9123	061G08051502FT	RST CHIP 15K 1/8W 1%	
R8119	061G0805154 JT	RST CHIP 150K 1/8W 5% TZAI YUAN	
R8102	061G08051803FT	RST CHIPR 180K +-1% 1/8W TZAI YUAN	
R9125	061G08051803FT	RST CHIPR 180K +-1% 1/8W TZAI YUAN	
R8108	061G0805201 JT	RST CHIPR 200OHM +-5% 1/8W TZAI YUAN	
R8105	061G0805229 JT	RST CHIPR 2R2 +-5% 1/8W TZAI YUAN	
R9122	061G08053301FT	RST CHIP 3K3 1/8W 1%	
R8117	061G08054701FT	RST CHIP 4K7 1/8W 1%	
R9121	061G0805471 JT	RST CHIPR 470OHM +-5% 1/8W TZAI YUAN	
R9141	061G08055100FT	RST CHIP R 510 OHM +-1% 1/8W	
R8101	061G08055102FT	RST CHIP 51K 1/8W 1%	
R9110	061G08057509FT	RST CHIP R 75OHM 1/8W +/-1%	
R8104	061G08057509FT	RST CHIP R 75OHM 1/8W +/-1%	
R9126	061G08059311FT	RST CHIPR 9.31KOHM +-1% 1/8W TZAI YUAN	
JR903	061G1206000 JF	RST CHIPR MAX0R05 1/4W FENGHUA	
JR902	061G1206000 JF	RST CHIPR MAX0R05 1/4W FENGHUA	
JR901	061G1206000 JF	RST CHIPR MAX0R05 1/4W FENGHUA	
JR904	061G1206000 JF	RST CHIPR MAX0R05 1/4W FENGHUA	
R8110	061G12061003FT	RST 1206 100K 1% 1/4W SMD1206100KF	
R8116	061G12061003FT	RST 1206 100K 1% 1/4W SMD1206100KF	
R8113	061G12061809FT	RST 1206 18R 1% 1/4W	
R9120	061G1206220 JT	RST CHIPR 22 OHM +-5% 1/4W TZAI YUAN	
R9140	061G1206220 JT	RST CHIPR 22 OHM +-5% 1/4W TZAI YUAN	
R9138	061G1206220 JT	RST CHIPR 22 OHM +-5% 1/4W TZAI YUAN	
R9115	061G1206220 JT	RST CHIPR 22 OHM +-5% 1/4W TZAI YUAN	
R9118	061G1206220 JT	RST CHIPR 22 OHM +-5% 1/4W TZAI YUAN	
R9139	061G1206220 JT	RST CHIPR 22 OHM +-5% 1/4W TZAI YUAN	
R9119	061G1206220 JT	RST CHIPR 22 OHM +-5% 1/4W TZAI YUAN	
R9117	061G1206220 JT	RST CHIPR 22 OHM +-5% 1/4W TZAI YUAN	
R9116	061G1206220 JT	RST CHIPR 22 OHM +-5% 1/4W TZAI YUAN	
R9113	061G1206221 JT	RST CHIPR 220 OHM +-5% 1/4W TZAI YUAN	
R9129	061G1206471 JT	ST CHIPR 470 OHM +-5% 1/4W TZAI YUAN	
R9108	061G1206479 JT	RST 1206 4.7R 5% 1/4W	
R9101	061G1206682 JT	RST CHIPR 6.8 KOHM +-5% 1/4W TZAI YUAN	
R9103	061G1206682 JT	RST CHIPR 6.8 KOHM +-5% 1/4W TZAI YUAN	
R9102	061G1206682 JT	RST CHIPR 6.8 KOHM +-5% 1/4W TZAI YUAN	
R9107	061G12068202FT	RST CHIPR 82KOHM +-1% 1/4W TZAI YUAN	
R9106	061G12068202FT	RST CHIPR 82KOHM +-1% 1/4W TZAI YUAN	
R9105	061G12068202FT	RST CHIPR 82KOHM +-1% 1/4W TZAI YUAN	
R9104	061G12068202FT	RST CHIPR 82KOHM +-1% 1/4W TZAI YUAN	
C8114	065G080510332K Y	CAP CHIP 0805 10N 50V X7R +/-10%	
C8108	065G080510332K Y	CAP CHIP 0805 10N 50V X7R +/-10%	
C9124	065G080510332K Y	CAP CHIP 0805 10N 50V X7R +/-10%	
C9119	065G080510432K Y	CAP CHIP 0805 100N 50V X7R +/-10%	
C9110	065G080510432K Y	CAP CHIP 0805 100N 50V X7R +/-10%	
C9115	065G080510432K Y	CAP CHIP 0805 100N 50V X7R +/-10%	
C8109	065G080510432K Y	CAP CHIP 0805 100N 50V X7R +/-10%	

C8105	065G080510432K Y	CAP CHIP 0805 100N 50V X7R +/-10%	
C9104	065G080510432K Y	CAP CHIP 0805 100N 50V X7R +/-10%	
C9112	065G080510432K Y	CAP CHIP 0805 100N 50V X7R +/-10%	
C8104	065G080510432K Y	CAP CHIP 0805 100N 50V X7R +/-10%	
C9114	065G080510432K Y	CAP CHIP 0805 100N 50V X7R +/-10%	
C8103	065G080510432K Y	CAP CHIP 0805 100N 50V X7R +/-10%	
C9106	065G080522131J Y	CAP CHIP 0805 220P 50V NP0 +/-5%	
C9123	065G080522232K Y	CAP CHIP 0805 2N2 50V X7R +/-10%	
C9107	065G080522232K Y	CAP CHIP 0805 2N2 50V X7R +/-10%	
C9117	065G080522432K Y	CAP CHIP 0805 220N 50V X7R +/-10%	
C8110	065G080547131J Y	CAP CHIP 0805 470P 50V NPO +/-5%	
C9108	065G120610272K Y	CAP 1206 1NF 10% 500V X7R	
D8104	093G 6433S	SWITCHING DIODE BAV99	
D8105	093G 6433S	SWITCHING DIODE BAV99	
D8106	093G 6433S	SWITCHING DIODE BAV99	
D8103	093G 6433S	SWITCHING DIODE BAV99	
IC9101	356G0379007217	AC/DC PF6200 S SOP-7	
R8121	361G08051059FT	RST 0805 10R5 1% 1/8W SMD080510R5F	
R8124	361G08051059FT	RST 0805 10R5 1% 1/8W SMD080510R5F	
R8125	361G08051059FT	RST 0805 10R5 1% 1/8W SMD080510R5F	
R8122	361G08051059FT	RST 0805 10R5 1% 1/8W SMD080510R5F	
R8123	361G08051059FT	RST 0805 10R5 1% 1/8W SMD080510R5F	
R9109	361G08051809FT	RST 0805 18 OHM 1% 1/8W SMD0805018RF	
D9104	393G006432S0HF	SWITCHING 1N4148W 0.15A 75V SOD-123	
D8102	393G006432S0HF	SWITCHING 1N4148W 0.15A 75V SOD-123	
D8103	393G006433P0HF	HF BAV99_R1_00001 0.5A 100V SOT-23	
D8104	393G006433P0HF	HF BAV99_R1_00001 0.5A 100V SOT-23	
D8105	393G006433P0HF	HF BAV99_R1_00001 0.5A 100V SOT-23	
D8106	393G006433P0HF	HF BAV99_R1_00001 0.5A 100V SOT-23	
ZD9104	393G039SA2400T	ZENER BZT52-B6V8 6.8V 0.41W SOD-123	
ZD9106	393G039SA2800T	ZENER BZT52-B36 36V -- --	
ZD9105	393G039SA2800T	ZENER BZT52-B36 36V -- --	
CN9901	006G 31500	EYELET	
C9101	006G 31502	EYELET	
L9901	006G 31502	EYELET	
RV9901	006G 31502	EYELET	
FOR C9901	006G 31502	EYELET	
C9102	006G 31502	EYELET	
T9101	006G 31502	EYELET	
Q8104	057G 417513 T	TRA 2N3904 TO-92	
Q8103	057G 417513 T	TRA 2N3904 TO-92	
Q9102	057G 417513 T	TRA 2N3904 TO-92	
Q8107	057G 417513 T	TRA 2N3904 TO-92	
Q8102	057G 417513 T	TRA 2N3904 TO-92	
Q8106	057G 417513 T	TRA 2N3904 TO-92	
Q8105	057G 417513 T	TRA 2N3904 TO-92	
R8118	061G 60210552T TZ	RST CFR 1M 1/6W 5%	
R8107	061G152M10852T SY	RST MOF 0R1 5% 2W	
R9112	061G152M43852T SY	RST MOFR 0.43 OHM +-5% 2WS FUTABA	
R9130	061G152M47152T SY	RST MOF 470R 5% 2W FUTABA	
R9901	061G212Y10552T SY	RST MGFR 1MOHM +-5% 1/2W FUTABA	
C9103	065G 1K22293S	CAP CER 2.2NF 10% 1KV R TAPING	
C9908	065G306K10123R	CAP Y1 100PF 10% 250V Y5P	
C9908	065G306K1012WR	CAP Y1 100PF 10% 250V Y5P CT7-Y1-250V-06	

C9906	065G306K22123R	CAP Y1 220PF 10% 250V Y5P	
C9907	065G306K22123R	CAP Y1 220PF 10% 250V Y5P	
C9904	065G306K22123R	CAP Y1 220PF 10% 250V Y5P	
C9904	065G306K2212WR	CAP Y1 220PF 10% 250V Y5P CT7-Y1-250V-06	
C9907	065G306K2212WR	CAP Y1 220PF 10% 250V Y5P CT7-Y1-250V-06	
C9906	065G306K2212WR	CAP Y1 220PF 10% 250V Y5P CT7-Y1-250V-06	
C9903	065G306K47123R	CAP Y1 470PF 10% 250V Y5P	
C9902	065G306K47123R	CAP Y1 470PF 10% 250V Y5P	
C9903	065G306K4712WR	CAP Y1 470PF 10% 250V Y5P CT7-Y1-250V-0	
C9902	065G306K4712WR	CAP Y1 470PF 10% 250V Y5P CT7-Y1-250V-0	
C9121	067G 5153314HT A	EC 330UF 20% 25V HSP331M1EG07VM6HTAP5	
C9116	067G 5153314HT A	EC 330UF 20% 25V HSP331M1EG07VM6HTAP5	
C9111	067G 5153314HT A	EC 330UF 20% 25V HSP331M1EG07VM6HTAP5	
C9109	067G 5153314HT A	EC 330UF 20% 25V HSP331M1EG07VM6HTAP5	
C8101	067G 5153314HT A	EC 330UF 20% 25V HSP331M1EG07VM6HTAP5	
C9113	067G 5153314HT A	EC 330UF 20% 25V HSP331M1EG07VM6HTAP5	
C9122	067G 5153314HT A	EC 330UF 20% 25V HSP331M1EG07VM6HTAP5	
C9105	067G 5154707KB	EC 47UF 20% 50V 6.3*11	
C8113	067G 5154709HT	EC 47UF 20% 100V 10*12	
C8113	067G 5154709KT	EC 47UF 20% 100V 10*12	
ZD9101	093G 39A0852T	GDZJ18B	
D9103	093G 6026T52T	CTIFIER DIODE FR107	
D9105	093G 6026T52T	CTIFIER DIODE FR107	
D9103	093G 60964	RECTIFIER PS1010R T/B 1A 1000V DO-41	
D9105	093G 60964	RECTIFIER PS1010R T/B 1A 1000V DO-41	
J926	095G 90 23	JUMP WIRE - -	
FB9907	095G 90 23	JUMP WIRE - -	
J925	095G 90 23	JUMP WIRE - -	
J920	095G 90 23	JUMP WIRE - -	
J905	095G 90 23	JUMP WIRE - -	
J919	095G 90 23	JUMP WIRE - -	
J904	095G 90 23	JUMP WIRE - -	
J915	095G 90 23	JUMP WIRE - -	
J907	095G 90 23	JUMP WIRE - -	
J909	095G 90 23	JUMP WIRE - -	
FB9906	095G 90 23	JUMP WIRE - -	
J903	095G 90 23	JUMP WIRE - -	
J930	095G 90 23	JUMP WIRE - -	
J912	095G 90 23	JUMP WIRE - -	
J918	095G 90 23	JUMP WIRE - -	
J917	095G 90 23	JUMP WIRE - -	
FB9908	095G 90 23	JUMP WIRE - -	
J929	095G 90 23	JUMP WIRE - -	
FB9905	095G 90 23	JUMP WIRE - -	
J921	095G 90 23	JUMP WIRE - -	
J924	095G 90 23	JUMP WIRE - -	
J916	095G 90 23	JUMP WIRE - -	
J914	095G 90 23	JUMP WIRE - -	
J906	095G 90 23	JUMP WIRE - -	
J908	095G 90 23	JUMP WIRE - -	
J923	095G 90 23	JUMP WIRE - -	
J922	095G 90 23	JUMP WIRE - -	
J911	095G 90 23	JUMP WIRE - -	
J902	095G 90 23	JUMP WIRE - -	

FB9903	095G 90 23	JUMP WIRE - -	
Q8104	357G0419040600	SMALLTRAN ST 2N3904 0.2A 40V TO-92	
Q8103	357G0419040600	SMALLTRAN ST 2N3904 0.2A 40V TO-92	
Q9102	357G0419040600	SMALLTRAN ST 2N3904 0.2A 40V TO-92	
Q8107	357G0419040600	SMALLTRAN ST 2N3904 0.2A 40V TO-92	
Q8102	357G0419040600	SMALLTRAN ST 2N3904 0.2A 40V TO-92	
Q8106	357G0419040600	SMALLTRAN ST 2N3904 0.2A 40V TO-92	
Q8105	357G0419040600	SMALLTRAN ST 2N3904 0.2A 40V TO-92	
R8107	361G152M10852T00TZ	RST MOF 0.1R 5% 2W MOF2W0R1JT52	
R9112	361G152M43852T00TZ	RST MOF 0.43OHM 5% 2W MOF2WS0R43JT52	
R9130	361G152M47152T00TZ	RST MOF 470OHM 5% 2W MOF2WS470RJT52	
R9901	361G212Y10552T00TZ	RST MGF 1M 5% 1/2W MG1/2W1MJT52E8	
E715	715G5804P01W20001M	POWER BOARD PCB	
M01101	Q11G701017000L00JY	PCB-SUPPORT	
M01101	Q11G701017000L00XL	PCB-SUPPORT	
	Q11T5024 1 GP	WIRE-CLIP	
	Q12G6082 3	FOOT PAD	
	Q36G060006204600JY	NON-WOVEN FABRIC	
	Q36G060006204700JY	NON-WOVEN FABRIC	
	Q36T 600 30 10	NONWOVEN FABRIC	
	Q36T 600 30 10	NONWOVEN FABRIC	
	Q36T 600 31 1	NONWOVEN FABRIC	
	Q40G 581689 4B	SN LABEL(58X35MM)	
	Q40T0001001 1A	SN LABEL	
	Q41G7800615B92	WARRANTY CARD	
	Q45G88010TV08500WN	PROTECT BAG	
	Q45G88010TV09100X1	PROTECT BAG	
	Q45G99010TV06600WN	PROTECT BAG	
	Q52G130118600000YY	TAPE	
	Q52G15010TV0070WXW	TAPE_INSULATING	
	Q52G160119100A00YY	TAPE	
M05201	Q52G18010TV0500AJY	INSULATING SHEET	
M05201	Q52G18010TV0500AZA	INSULATING SHEET	
	Q85G 583195	GASKET	
	X15T8192101CKD00BL	BKT_VESA SGCC	
	X15T8235102CKD00YF	BKT_POWER_L SGCC	
	X15T8574201CKD00YF	BKT_HOLDER	
	X15T8601101CKD00BL	BKT_SPEAKER	
	X15T8603701CKDGMBL	BKT_IO	
	X15T8633101CKD00YF	BKT_KEY	
	X33T00210GM01GC100	COVER_CLOCK_REAR	
	X33T0051ADT01LC100	KEY_FUNCTION	
	X33T0052ADTZ1LC200	KEY_FUNCTION	
	X33T0074AKZ01C0100	LENS_IR	
	X34T0088ADT02LC100	BASE	
	X34T0089ADT01LC100	STAND	
	X34T0091ADTZ3LC1BA	BEZEL TV236WSL-13D-DA5-DA1 --- ---	
	X34T00920GM04KC101	REAR_COVER TV236WSL-13D-DA5-DA1 --- ---	
	X40G024061519A	RATING LABEL FOR LE24D1440/20 AOC BZ	
	X40G2013024X0900ZA	IO LABEL	
	X40G2013024X1000XY	LABEL IO	
	X41G24MV61515A	MANUAL LE24D1440/20	
	X41G78SV61528A	QSG LE24D1440	
	X44GKA161010FA	CUSHION-T	

	X44GKA162010FA	CUSHION-B	
	X44GKA1662401A	DIE CUT CARTON	
M05202	X52G18010TV18901BK	INSULATING SHEET	
M05202	X52G18010TV18901HK	INSULATING SHEET	

E2CD9KNSGGB16NX

Location	Part No.	Description	Remark
	705TXDBCAF7	705 ASS'Y FOR BRAZIL PCBA	
	756TXDCB0KS0200002	MAIN BOARD-CBPFDKCSX2C	
SMTF-U405	100TARVD012S2X	MCU ASSY-056G2233 50	
	IRPFDXC4C	IR BOARD	
R204	061G0603101 JT	RST CHIP 100R 1/10W 5% TZAI YUAN	
R201	061G0603153 JY	RST CHIPR 15KOHM 1/10W YAGEO	
R203	061G0603221 JF	ST CHIPR 220 OHM +-5% 1/10W FENGHUA	
C201	065G060322515K T	CAP 0603 2.2UF 10% 16V X5R	
LED201	081G 15 3 GP	CHIP LED BLUE/RED GPTD12048BRC1-AR	
CN201	311GW125D05ACX	WAFER 1.25MM 5P V/T S1315-05SVB-S03-R	
U201	356GS927038002	SMD IR RECEIVER --IRM- V838M3/TR1 --38	
U201	356GS927038006	SMD IR RECEIVER TSOP75438TR 38 KHZ	
	709T64490XS01C	COMSUMPTIVE ASSY	
	715G6449R01000004F	IR BOARD PCB	
	KEPFDXC1C	KEY BOARD	
CN01	033G8032 4F HR	CONNECTOR 4P 1.25	
R05	061G04021001FI	RST 0402 1K 1% 1/16W TA-I	
R04	061G04022201FI	RST CHIPR 2.2KOHM +-1% 1/16W TA-I	
R01	061G04022202FI	RST 0402 22K 1% 1/16W TA-I	
R07	061G04023301FI	RST 0402 3.3K 1% 1/16W TA-I	
R06	061G04023301FI	RST 0402 3.3K 1% 1/16W TA-I	
R03	061G04024301FT	RST CHIP 4K3 1/16W 1%	
R02	061G04028201FI	RST 0402 8.2K 1% 1/16W TA-I	
SW04	077G 607 2 FD	CHIP TACT SW BY FORWARD SFKQGMA2125T-PL	
SW03	077G 607 2 FD	CHIP TACT SW BY FORWARD SFKQGMA2125T-PL	
SW05	077G 607 2 FD	CHIP TACT SW BY FORWARD SFKQGMA2125T-PL	
SW01	077G 607 2 FD	CHIP TACT SW BY FORWARD SFKQGMA2125T-PL	
SW06	077G 607 2 FD	CHIP TACT SW BY FORWARD SFKQGMA2125T-PL	
SW02	077G 607 2 FD	CHIP TACT SW BY FORWARD SFKQGMA2125T-PL	
SW07	077G 607 2 FD	CHIP TACT SW BY FORWARD SFKQGMA2125T-PL	
SW07	077G 607 2 HC	TACT SW 4P 1.5MM 160G TS-4402-1.58B-01	
SW02	077G 607 2 HC	TACT SW 4P 1.5MM 160G TS-4402-1.58B-01	
SW06	077G 607 2 HC	TACT SW 4P 1.5MM 160G TS-4402-1.58B-01	
SW04	077G 607 2 HC	TACT SW 4P 1.5MM 160G TS-4402-1.58B-01	
SW03	077G 607 2 HC	TACT SW 4P 1.5MM 160G TS-4402-1.58B-01	
SW05	077G 607 2 HC	TACT SW 4P 1.5MM 160G TS-4402-1.58B-01	
SW01	077G 607 2 HC	TACT SW 4P 1.5MM 160G TS-4402-1.58B-01	
	709T64730XS001C	COMSUMPTIVE ASSY	
E715	715G6473K01000004F	KEY BOARD PCB	
	Z40G0002ALL01A	OTHER LABEL	
CN111	088G 78F232XQS	RCA JACK V/T 12P 2*3 G/BL/R+W/R/B H=8.6	
CN602	088G302C5B1ACL	PHONE JACK R/A 5P BLACK H=6.2	
CN104	088G352F6B3ACL	USB A TYPE R/A 6P BLACK H=8.4	
CN101	088G353FFF1XCL	D-SUB CONN SCREWED V/T 15P BLUE H=8.6	
CN410	311GW200G03BAX	WAFER 2.0MM 3P W2011-03SVA-S14	
CN102	388G302F4O3VQS	PHONE JACK V/T 4P 1*1 ORANGE 15.5	
TU101	394GATSCALL12L	TUNER -- ST07CN-6-E	
	709T58010XM001C	COMSUMPTIVE ASSY	
	055G 23524	WELDING FLUX WITHOUT PB	
	Q49G 51100	CLEANER	
	Q55G 100620500	TIN STICK(SN-0.5AG)	
HS401	P90T0059202	HEAT SINK	

CN401	033G803210F HR	CONNECTOR 10P 1.25	
U704	056G 563149	IC G903T63UF 0.6A/3.3V SOT-223	
U703	056G 563344	DC/DC AT1529F11U 3.2A SOP-8	
U702	056G 563X01	LDO G9661-25ADJF11U 2A 300MV DROP SOP-8	
U601	056G 616 54	IC TPA3110D2 15W TSSOP-28	
U706	056G 643 13	G691L400T73UF SOT-23 GMT	
U407	056G1133 56	M24C16-WMN6TP	
U405	056G2233 50	FLASH H27U1G8F2BTR-BC 1GB TSOP1-48	
U409	056G74LS 23	LOGIC 74LVC1G17GV SOT-753	
Q7002	057G 417 4	PMBS3904/PHILIPS-SMT(04)	
Q4025	057G 417 4	PMBS3904/PHILIPS-SMT(04)	
Q7005	057G 417 4	PMBS3904/PHILIPS-SMT(04)	
Q501	057G 417 4	PMBS3904/PHILIPS-SMT(04)	
Q4003	057G 417 4	PMBS3904/PHILIPS-SMT(04)	
Q6002	057G 417 4	PMBS3904/PHILIPS-SMT(04)	
Q4001	057G 417 4	PMBS3904/PHILIPS-SMT(04)	
Q7001	057G 417 4	PMBS3904/PHILIPS-SMT(04)	
Q7011	057G 417 4	PMBS3904/PHILIPS-SMT(04)	
Q4023	057G 417 4	PMBS3904/PHILIPS-SMT(04)	
Q4008	057G 417 4	PMBS3904/PHILIPS-SMT(04)	
Q4009	057G 417 4	PMBS3904/PHILIPS-SMT(04)	
Q4002	057G 417 4	PMBS3904/PHILIPS-SMT(04)	
Q4004	057G 417 4	PMBS3904/PHILIPS-SMT(04)	
Q4007	057G 417 4	PMBS3904/PHILIPS-SMT(04)	
Q7009	057G 417 4	PMBS3904/PHILIPS-SMT(04)	
Q7008	057G 417512	MMBT3906	
Q4020	057G 417512	MMBT3906	
Q4024	057G 417512	MMBT3906	
Q6001	057G 417512	MMBT3906	
Q4005	057G 763 39	FET AO3404 SOT-23 AOS	
Q4006	057G 763940	MOSFET AO3401A SOT-23	
Q7004	057G 763940	MOSFET AO3401A SOT-23	
Q4021	057G 763940	MOSFET AO3401A SOT-23	
Q4022	057G 763940	MOSFET AO3401A SOT-23	
Q7007	057G 763940	MOSFET AO3401A SOT-23	
TH102	061G 56A100 WT	PTCR SMD 0.21R MAX 0.8W	
R6015	061G0402000 JF	RST CHIPR MAX0R05 1/16W FENGHUA	
R127	061G0402000 JI	RST 0402 0.05R MAX 1/16W	
R4013	061G0402000 JI	RST 0402 0.05R MAX 1/16W	
R158	061G0402000 JI	RST 0402 0.05R MAX 1/16W	
R4045	061G0402000 JI	RST 0402 0.05R MAX 1/16W	
R7080	061G0402000 JI	RST 0402 0.05R MAX 1/16W	
R141	061G0402000 JI	RST 0402 0.05R MAX 1/16W	
R129	061G0402000 JI	RST 0402 0.05R MAX 1/16W	
R103	061G0402000 JI	RST 0402 0.05R MAX 1/16W	
R6018	061G0402000 JI	RST 0402 0.05R MAX 1/16W	
R6004	061G0402000 JI	RST 0402 0.05R MAX 1/16W	
R4095	061G0402000 JI	RST 0402 0.05R MAX 1/16W	
R6006	061G0402000 JI	RST 0402 0.05R MAX 1/16W	
R6017	061G0402000 JI	RST 0402 0.05R MAX 1/16W	
R135	061G0402000 JI	RST 0402 0.05R MAX 1/16W	
R132	061G0402000 JI	RST 0402 0.05R MAX 1/16W	
R131	061G0402000 JI	RST 0402 0.05R MAX 1/16W	
R130	061G0402000 JI	RST 0402 0.05R MAX 1/16W	

R144	061G0402000 JI	RST 0402 0.05R MAX 1/16W	
R7035	061G0402000 JI	RST 0402 0.05R MAX 1/16W	
R105	061G0402000 JI	RST 0402 0.05R MAX 1/16W	
R149	061G0402000 JI	RST 0402 0.05R MAX 1/16W	
R136	061G0402000 JI	RST 0402 0.05R MAX 1/16W	
R134	061G0402000 JI	RST 0402 0.05R MAX 1/16W	
R146	061G0402000 JI	RST 0402 0.05R MAX 1/16W	
R4014	061G0402000 JI	RST 0402 0.05R MAX 1/16W	
R6026	061G0402000 JI	RST 0402 0.05R MAX 1/16W	
R102	061G0402000 JI	RST 0402 0.05R MAX 1/16W	
R163	061G0402000 JI	RST 0402 0.05R MAX 1/16W	
R4083	061G0402000 JI	RST 0402 0.05R MAX 1/16W	
R104	061G0402000 JI	RST 0402 0.05R MAX 1/16W	
R108	061G0402000 JI	RST 0402 0.05R MAX 1/16W	
R139	061G0402000 JI	RST 0402 0.05R MAX 1/16W	
R4017	061G0402000 JY	RST CHIPR MAX 0R05 OHM 1/16W YAGEO	
R6020	061G0402100 JI	TEST ONLY RST 0402 10R 5% 1/16W TA-I	
R6007	061G0402100 JI	TEST ONLY RST 0402 10R 5% 1/16W TA-I	
R7016	061G0402100 JI	TEST ONLY RST 0402 10R 5% 1/16W TA-I	
R6027	061G0402100 JI	TEST ONLY RST 0402 10R 5% 1/16W TA-I	
R6022	061G0402100 JI	TEST ONLY RST 0402 10R 5% 1/16W TA-I	
R5020	061G04021000FT	RST CHIP 100R 1/16W 1%	
R4044	061G04021001FI	RST 0402 1K 1% 1/16W TA-I	
R4048	061G04021001FI	RST 0402 1K 1% 1/16W TA-I	
R6023	061G04021003FI	RST CHIP 100K 1/16W 1% TA-I	
R4047	061G04021004FI	RST 0402 1M 1% 1/16W TA-I	
R168	061G0402101 JI	BEST ONLY RST 0402 100R 5% 1/16W TA-I	
R166	061G0402101 JI	BEST ONLY RST 0402 100R 5% 1/16W TA-I	
R4101	061G0402101 JI	BEST ONLY RST 0402 100R 5% 1/16W TA-I	
R145	061G0402101 JI	BEST ONLY RST 0402 100R 5% 1/16W TA-I	
R4078	061G0402101 JI	BEST ONLY RST 0402 100R 5% 1/16W TA-I	
R171	061G0402101 JI	BEST ONLY RST 0402 100R 5% 1/16W TA-I	
R161	061G0402101 JI	BEST ONLY RST 0402 100R 5% 1/16W TA-I	
R4093	061G0402101 JI	BEST ONLY RST 0402 100R 5% 1/16W TA-I	
R150	061G0402101 JI	BEST ONLY RST 0402 100R 5% 1/16W TA-I	
R142	061G0402101 JI	BEST ONLY RST 0402 100R 5% 1/16W TA-I	
R173	061G0402101 JI	BEST ONLY RST 0402 100R 5% 1/16W TA-I	
R137	061G0402101 JI	BEST ONLY RST 0402 100R 5% 1/16W TA-I	
R165	061G0402101 JI	BEST ONLY RST 0402 100R 5% 1/16W TA-I	
R6012	061G0402101 JI	BEST ONLY RST 0402 100R 5% 1/16W TA-I	
R169	061G0402101 JI	BEST ONLY RST 0402 100R 5% 1/16W TA-I	
R6025	061G0402101 JI	BEST ONLY RST 0402 100R 5% 1/16W TA-I	
R178	061G0402101 JI	BEST ONLY RST 0402 100R 5% 1/16W TA-I	
R147	061G0402101 JI	BEST ONLY RST 0402 100R 5% 1/16W TA-I	
R172	061G0402101 JI	BEST ONLY RST 0402 100R 5% 1/16W TA-I	
R164	061G0402101 JI	BEST ONLY RST 0402 100R 5% 1/16W TA-I	
R140	061G0402101 JI	BEST ONLY RST 0402 100R 5% 1/16W TA-I	
R174	061G0402101 JI	BEST ONLY RST 0402 100R 5% 1/16W TA-I	
R7025	061G0402101 JI	BEST ONLY RST 0402 100R 5% 1/16W TA-I	
R170	061G0402101 JI	BEST ONLY RST 0402 100R 5% 1/16W TA-I	
R4099	061G0402101 JI	BEST ONLY RST 0402 100R 5% 1/16W TA-I	
R4077	061G0402101 JI	BEST ONLY RST 0402 100R 5% 1/16W TA-I	
R5005	061G0402102 JF	RST CHIPR 1KOHM +-5% 1/16W FENGHUA	
R5003	061G0402102 JF	RST CHIPR 1KOHM +-5% 1/16W FENGHUA	

R7043	061G0402102 JI	RST 0402 1K 5% 1/16W TA-I	
R4086	061G0402102 JI	RST 0402 1K 5% 1/16W TA-I	
R7005	061G0402102 JI	RST 0402 1K 5% 1/16W TA-I	
R4005	061G0402102 JI	RST 0402 1K 5% 1/16W TA-I	
R7002	061G0402102 JI	RST 0402 1K 5% 1/16W TA-I	
R4097	061G0402102 JI	RST 0402 1K 5% 1/16W TA-I	
R128	061G0402102 JI	RST 0402 1K 5% 1/16W TA-I	
R7074	061G04021021FI	RST 0402 1.02K 1% 1/16W TA-I	
R5018	061G04021021FT	RST 0402 1.02K 1% 1/16W TZAI YUAN	
R7024	061G0402103 JI	TEST ONLY RST 0402 10K 5% 1/16W TA-I	
R126	061G0402103 JI	TEST ONLY RST 0402 10K 5% 1/16W TA-I	
R5007	061G0402103 JI	TEST ONLY RST 0402 10K 5% 1/16W TA-I	
R7017	061G0402103 JI	TEST ONLY RST 0402 10K 5% 1/16W TA-I	
R4031	061G0402103 JI	TEST ONLY RST 0402 10K 5% 1/16W TA-I	
R7072	061G0402103 JI	TEST ONLY RST 0402 10K 5% 1/16W TA-I	
R7001	061G0402103 JI	TEST ONLY RST 0402 10K 5% 1/16W TA-I	
R4002	061G0402103 JI	TEST ONLY RST 0402 10K 5% 1/16W TA-I	
R4004	061G0402103 JI	TEST ONLY RST 0402 10K 5% 1/16W TA-I	
R4033	061G0402103 JI	TEST ONLY RST 0402 10K 5% 1/16W TA-I	
R4070	061G0402103 JI	TEST ONLY RST 0402 10K 5% 1/16W TA-I	
R6005	061G0402103 JI	TEST ONLY RST 0402 10K 5% 1/16W TA-I	
R4003	061G0402103 JI	TEST ONLY RST 0402 10K 5% 1/16W TA-I	
R7076	061G0402103 JT	RST CHIP 10K 1/16W 5% TZAI YUAN	
R152	061G0402103 JT	RST CHIP 10K 1/16W 5% TZAI YUAN	
R7075	061G0402103 JT	RST CHIP 10K 1/16W 5% TZAI YUAN	
R154	061G0402103 JT	RST CHIP 10K 1/16W 5% TZAI YUAN	
R7057	061G0402104 JF	RST CHIPR 100KOHM +-5% 1/16W FENGHUA	
R7058	061G0402104 JF	RST CHIPR 100KOHM +-5% 1/16W FENGHUA	
R6002	061G0402104 JI	TEST ONLY RST 0402 100K 5% 1/16W TA-I	
R6008	061G0402151 JI	RST 0402 150R 5% 1/16W	
R6009	061G0402151 JI	RST 0402 150R 5% 1/16W	
R5019	061G04021800FT	RST CHIP 180R 1/16W 1% TZAI YUAN	
R4088	061G0402201 JF	RST CHIPR 200 OHM +-5% 1/16W FENGHUA	
R4100	061G0402201 JF	RST CHIPR 200 OHM +-5% 1/16W FENGHUA	
R4094	061G0402201 JF	RST CHIPR 200 OHM +-5% 1/16W FENGHUA	
R4084	061G0402201 JF	RST CHIPR 200 OHM +-5% 1/16W FENGHUA	
R7042	061G0402202 JY	RST CHIPR 2KOHM 1/16W YAGEO	
R4069	061G0402220 JI	RST 0402 22R 5% 1/16W TA-I	
R4062	061G0402220 JI	RST 0402 22R 5% 1/16W TA-I	
R4060	061G0402220 JI	RST 0402 22R 5% 1/16W TA-I	
R4021	061G0402220 JI	RST 0402 22R 5% 1/16W TA-I	
R4020	061G0402220 JI	RST 0402 22R 5% 1/16W TA-I	
R4019	061G0402220 JI	RST 0402 22R 5% 1/16W TA-I	
R4018	061G0402220 JI	RST 0402 22R 5% 1/16W TA-I	
R4061	061G0402220 JI	RST 0402 22R 5% 1/16W TA-I	
R5006	061G04022202FI	RST 0402 22K 1% 1/16W TA-I	
R7019	061G04022202FI	RST 0402 22K 1% 1/16W TA-I	
R176	061G0402222 JI	TEST ONLY RST 0402 2.2K 5% 1/16W TA-I	
R175	061G0402222 JI	TEST ONLY RST 0402 2.2K 5% 1/16W TA-I	
R4008	061G0402223 JT	RST CHIP 22K 1/16W 5% TZAI YUAN	
R4036	061G04022400FI	RST 0402 240R 1% 1/16W	
R4032	061G0402273 JI	RST 0402 27K 5% 1/16W	
R7006	061G04023011FI	RST 0402 3.01K 1% 1/16W TA-I	
R120	061G0402303 JI	RST 0402 30K 5% 1/16W	

R7007	061G04023301FI	RST 0402 3.3K 1% 1/16W TA-I	
R4006	061G0402333 JT	RST CHIP 33K 1/16W 5% TZAI YUAN	
R5021	061G04023901FT	ST 0402 3.9K 1% 1/16W TZAI YUAN	
R7073	061G04024701FI	RST 0402 4.7K 1/16W 1% TA-I	
R160	061G0402472 JI	TEST ONLY RST CHIP 4.7K 5% 1/16W TA-I	
R4090	061G0402472 JI	TEST ONLY RST CHIP 4.7K 5% 1/16W TA-I	
R7079	061G0402472 JI	TEST ONLY RST CHIP 4.7K 5% 1/16W TA-I	
R4067	061G0402472 JI	TEST ONLY RST CHIP 4.7K 5% 1/16W TA-I	
R7078	061G0402472 JI	TEST ONLY RST CHIP 4.7K 5% 1/16W TA-I	
R4068	061G0402472 JI	TEST ONLY RST CHIP 4.7K 5% 1/16W TA-I	
R4040	061G0402472 JI	TEST ONLY RST CHIP 4.7K 5% 1/16W TA-I	
R7077	061G0402472 JI	TEST ONLY RST CHIP 4.7K 5% 1/16W TA-I	
R7045	061G0402472 JI	TEST ONLY RST CHIP 4.7K 5% 1/16W TA-I	
R4080	061G0402472 JI	TEST ONLY RST CHIP 4.7K 5% 1/16W TA-I	
R7027	061G0402472 JI	TEST ONLY RST CHIP 4.7K 5% 1/16W TA-I	
R4079	061G0402472 JI	TEST ONLY RST CHIP 4.7K 5% 1/16W TA-I	
R7029	061G0402472 JI	TEST ONLY RST CHIP 4.7K 5% 1/16W TA-I	
R7083	061G0402472 JI	TEST ONLY RST CHIP 4.7K 5% 1/16W TA-I	
R4043	061G0402472 JI	TEST ONLY RST CHIP 4.7K 5% 1/16W TA-I	
R4056	061G0402472 JI	TEST ONLY RST CHIP 4.7K 5% 1/16W TA-I	
R5010	061G0402472 JI	TEST ONLY RST CHIP 4.7K 5% 1/16W TA-I	
R4089	061G0402472 JI	TEST ONLY RST CHIP 4.7K 5% 1/16W TA-I	
R7084	061G0402472 JI	TEST ONLY RST CHIP 4.7K 5% 1/16W TA-I	
R5011	061G0402472 JI	TEST ONLY RST CHIP 4.7K 5% 1/16W TA-I	
R4054	061G0402472 JI	TEST ONLY RST CHIP 4.7K 5% 1/16W TA-I	
R4065	061G0402472 JI	TEST ONLY RST CHIP 4.7K 5% 1/16W TA-I	
R4091	061G0402472 JI	TEST ONLY RST CHIP 4.7K 5% 1/16W TA-I	
R4066	061G0402472 JI	TEST ONLY RST CHIP 4.7K 5% 1/16W TA-I	
R157	061G0402472 JI	TEST ONLY RST CHIP 4.7K 5% 1/16W TA-I	
R4085	061G0402472 JI	TEST ONLY RST CHIP 4.7K 5% 1/16W TA-I	
R133	061G0402472 JI	TEST ONLY RST CHIP 4.7K 5% 1/16W TA-I	
R7021	061G0402472 JI	TEST ONLY RST CHIP 4.7K 5% 1/16W TA-I	
R5012	061G0402472 JI	TEST ONLY RST CHIP 4.7K 5% 1/16W TA-I	
R4027	061G0402472 JI	TEST ONLY RST CHIP 4.7K 5% 1/16W TA-I	
R4050	061G0402472 JI	TEST ONLY RST CHIP 4.7K 5% 1/16W TA-I	
R4038	061G0402472 JI	TEST ONLY RST CHIP 4.7K 5% 1/16W TA-I	
R4025	061G0402472 JI	TEST ONLY RST CHIP 4.7K 5% 1/16W TA-I	
R101	061G0402472 JI	TEST ONLY RST CHIP 4.7K 5% 1/16W TA-I	
R4046	061G0402472 JI	TEST ONLY RST CHIP 4.7K 5% 1/16W TA-I	
R4058	061G0402472 JI	TEST ONLY RST CHIP 4.7K 5% 1/16W TA-I	
R7038	061G0402472 JI	TEST ONLY RST CHIP 4.7K 5% 1/16W TA-I	
R6016	061G0402472 JI	TEST ONLY RST CHIP 4.7K 5% 1/16W TA-I	
R4029	061G0402472 JI	TEST ONLY RST CHIP 4.7K 5% 1/16W TA-I	
R5013	061G0402472 JI	TEST ONLY RST CHIP 4.7K 5% 1/16W TA-I	
R4059	061G0402472 JI	TEST ONLY RST CHIP 4.7K 5% 1/16W TA-I	
R6003	061G0402472 JI	TEST ONLY RST CHIP 4.7K 5% 1/16W TA-I	
R159	061G0402472 JI	TEST ONLY RST CHIP 4.7K 5% 1/16W TA-I	
R4098	061G0402472 JT	RST CHIP 4K7 1/16W 5% TZAI YUAN	
R4082	061G0402472 JT	RST CHIP 4K7 1/16W 5% TZAI YUAN	
R6024	061G0402473 JI	TEST ONLY RST 0402 47K 5% 1/16W TA-I	
R121	061G0402473 JI	TEST ONLY RST 0402 47K 5% 1/16W TA-I	
R7064	061G0402473 JT	RST CHIP 47K 1/16W 5% TZAI YUAN	
R7063	061G0402473 JT	RST CHIP 47K 1/16W 5% TZAI YUAN	
R7023	061G04025602FI	RST 0402 56K 1% 1/16W TA-I	

R4034	061G0402622 JI	RST 0402 6.2K 5% 1/16W	
R181	061G0402682 JT	RST CHIP 6K8 1/16W 5% TZAI YUAN	
R153	061G0402682 JT	RST CHIP 6K8 1/16W 5% TZAI YUAN	
R151	061G0402682 JT	RST CHIP 6K8 1/16W 5% TZAI YUAN	
R182	061G0402682 JT	RST CHIP 6K8 1/16W 5% TZAI YUAN	
R177	061G0402750 JI	TEST ONLY RST 0402 75R 5% 1/16W TA-I	
R162	061G0402750 JI	TEST ONLY RST 0402 75R 5% 1/16W TA-I	
R167	061G0402750 JI	TEST ONLY RST 0402 75R 5% 1/16W TA-I	
R148	061G0402750 JI	TEST ONLY RST 0402 75R 5% 1/16W TA-I	
R138	061G0402750 JI	TEST ONLY RST 0402 75R 5% 1/16W TA-I	
R143	061G0402750 JI	TEST ONLY RST 0402 75R 5% 1/16W TA-I	
R7090	061G0603000 JI	RST 0603 0.05R MAX 1/10W TA-I	
R5016	061G0603000 JI	RST 0603 0.05R MAX 1/10W TA-I	
R7061	061G0603000 JI	RST 0603 0.05R MAX 1/10W TA-I	
R117	061G0603000 JI	RST 0603 0.05R MAX 1/10W TA-I	
R118	061G0603000 JI	RST 0603 0.05R MAX 1/10W TA-I	
R5015	061G0603000 JI	RST 0603 0.05R MAX 1/10W TA-I	
R7094	061G0603000 JI	RST 0603 0.05R MAX 1/10W TA-I	
R4035	061G0603000 JI	RST 0603 0.05R MAX 1/10W TA-I	
R5017	061G0603000 JI	RST 0603 0.05R MAX 1/10W TA-I	
R7062	061G0603000 JI	RST 0603 0.05R MAX 1/10W TA-I	
R5014	061G0603000 JI	RST 0603 0.05R MAX 1/10W TA-I	
R119	061G0603000 JI	RST 0603 0.05R MAX 1/10W TA-I	
R7060	061G0603000 JI	RST 0603 0.05R MAX 1/10W TA-I	
R7059	061G0603000 JI	RST 0603 0.05R MAX 1/10W TA-I	
R4057	061G0603000 JI	RST 0603 0.05R MAX 1/10W TA-I	
R7095	061G0603000 JI	RST 0603 0.05R MAX 1/10W TA-I	
R7085	061G06031000FY	RST CHIP 100R 1% 1/10W	
R7086	061G06031000FY	RST CHIP 100R 1% 1/10W	
R4092	061G0603101 JF	RST CHIPR 100 OHM +-5% 1/10W FENGHUA	
R6011	061G0603101 JF	RST CHIPR 100 OHM +-5% 1/10W FENGHUA	
R6032	061G0603102 JF	RST CHIPR 1K OHM +-5% 1/10W FENGHUA	
R6031	061G0603102 JF	RST CHIPR 1K OHM +-5% 1/10W FENGHUA	
R7003	061G0603103 JF	RST CHIPR 10K OHM +-5% 1/10W FENGHUA	
R6030	061G0603103 JF	RST CHIPR 10K OHM +-5% 1/10W FENGHUA	
R7009	061G0603103 JF	RST CHIPR 10K OHM +-5% 1/10W FENGHUA	
R7008	061G0603103 JF	RST CHIPR 10K OHM +-5% 1/10W FENGHUA	
R4030	061G0603103 JF	RST CHIPR 10K OHM +-5% 1/10W FENGHUA	
R7018	061G0603103 JF	RST CHIPR 10K OHM +-5% 1/10W FENGHUA	
R7020	061G0603103 JT	RST CHIP 10K 1/10W 5% TZAI YUAN	
R733	061G0603103 JY	RST CHIPR 10KOHM £«-5£¥ 1/10W YAGEO	
R7013	061G0603103 JY	RST CHIPR 10KOHM £«-5£¥ 1/10W YAGEO	
R7012	061G0603104 JF	RST CHIPR 100KOHM 5% 1/10W FENGHUA	
R7022	061G0603104 JF	RST CHIPR 100KOHM 5% 1/10W FENGHUA	
R4028	061G0603104 JF	RST CHIPR 100KOHM 5% 1/10W FENGHUA	
R4026	061G0603473 JF	RST CHIPR 47KOHM +-5% 1/10W FENGHUA	
R7011	061G0603473 JF	RST CHIPR 47KOHM +-5% 1/10W FENGHUA	
R107	061G0603511 JI	RST CHIP 510R 1/10W 5% TA-I	
R106	061G0603511 JI	RST CHIP 510R 1/10W 5% TA-I	
R6029	061G0805000 JF	RST CHIPR 0 OHM +-5% 1/8W FENGHUA	
R6028	061G0805000 JF	RST CHIPR 0 OHM +-5% 1/8W FENGHUA	
R6019	061G1206100 JT	RST CHIPR 10 OHM +-5% 1/4W TZAI YUAN	
R4022	061G1206152 JF	3ST CHIPR 1.5KOHM +-5% 1/4W FENGHUA	
C112	065G040210031J F	CAP 0402 10PF 5% 50V NP0	

C113	065G040210031J	F	CAP 0402 10PF 5% 50V NP0	
C6008	065G040210131J	Y	CAP CHIP 0402 100P 50V NP0 +/-5%	
C6022	065G040210131J	Y	CAP CHIP 0402 100P 50V NP0 +/-5%	
C6028	065G040210232K	Y	CAP 0402 1NF 10% 50V X7R CC0402KRX7R9BB	
C118	065G040210232K	Y	CAP 0402 1NF 10% 50V X7R CC0402KRX7R9BB	
C6003	065G040210232K	Y	CAP 0402 1NF 10% 50V X7R CC0402KRX7R9BB	
C114	065G040210332K	F	CAP 0402 10NF 10% 50V X7R	
C103	065G040210332K	F	CAP 0402 10NF 10% 50V X7R	
C105	065G040210332K	F	CAP 0402 10NF 10% 50V X7R	
C4105	065G040210332K	Y	CAP CHIP 0402 10N 50V X7R +/-10%	
C4002	065G040210412K	A	CAP CHIP 0402 100NF K 16V X7R	
C7060	065G040210412K	F	CAP 0402 100NF 10% 16V X7R	
C4018	065G040210412K	F	CAP 0402 100NF 10% 16V X7R	
C4055	065G040210412K	F	CAP 0402 100NF 10% 16V X7R	
C4085	065G040210412K	F	CAP 0402 100NF 10% 16V X7R	
C4017	065G040210412K	F	CAP 0402 100NF 10% 16V X7R	
C4084	065G040210412K	F	CAP 0402 100NF 10% 16V X7R	
C4068	065G040210412K	F	CAP 0402 100NF 10% 16V X7R	
C4012	065G040210412K	F	CAP 0402 100NF 10% 16V X7R	
C4052	065G040210412K	F	CAP 0402 100NF 10% 16V X7R	
C4016	065G040210412K	F	CAP 0402 100NF 10% 16V X7R	
C4063	065G040210412K	F	CAP 0402 100NF 10% 16V X7R	
C4066	065G040210412K	F	CAP 0402 100NF 10% 16V X7R	
C4083	065G040210412K	F	CAP 0402 100NF 10% 16V X7R	
C4001	065G040210412K	F	CAP 0402 100NF 10% 16V X7R	
C4008	065G040210412K	F	CAP 0402 100NF 10% 16V X7R	
C4014	065G040210412K	F	CAP 0402 100NF 10% 16V X7R	
C4088	065G040210412K	F	CAP 0402 100NF 10% 16V X7R	
C4074	065G040210412K	F	CAP 0402 100NF 10% 16V X7R	
C104	065G040210412K	F	CAP 0402 100NF 10% 16V X7R	
C4081	065G040210412K	F	CAP 0402 100NF 10% 16V X7R	
C111	065G040210412K	F	CAP 0402 100NF 10% 16V X7R	
C4086	065G040210412K	F	CAP 0402 100NF 10% 16V X7R	
C4072	065G040210412K	F	CAP 0402 100NF 10% 16V X7R	
C4059	065G040210412K	F	CAP 0402 100NF 10% 16V X7R	
C4049	065G040210412K	F	CAP 0402 100NF 10% 16V X7R	
C4058	065G040210412K	F	CAP 0402 100NF 10% 16V X7R	
C4069	065G040210412K	F	CAP 0402 100NF 10% 16V X7R	
C4011	065G040210412K	F	CAP 0402 100NF 10% 16V X7R	
C4054	065G040210412K	F	CAP 0402 100NF 10% 16V X7R	
C4064	065G040210412K	F	CAP 0402 100NF 10% 16V X7R	
C4071	065G040210412K	F	CAP 0402 100NF 10% 16V X7R	
C4034	065G040210412K	F	CAP 0402 100NF 10% 16V X7R	
C4070	065G040210412K	F	CAP 0402 100NF 10% 16V X7R	
C102	065G040210412K	F	CAP 0402 100NF 10% 16V X7R	
C4087	065G040210412K	F	CAP 0402 100NF 10% 16V X7R	
C4019	065G040210412K	F	CAP 0402 100NF 10% 16V X7R	
C4065	065G040210412K	F	CAP 0402 100NF 10% 16V X7R	
C4015	065G040210412K	F	CAP 0402 100NF 10% 16V X7R	
C4007	065G040210412K	F	CAP 0402 100NF 10% 16V X7R	
C4057	065G040210412K	F	CAP 0402 100NF 10% 16V X7R	
C4067	065G040210412K	F	CAP 0402 100NF 10% 16V X7R	
C4013	065G040210412K	F	CAP 0402 100NF 10% 16V X7R	
C4110	065G040210412K	Y	CAP 0402 100NF 10% 16V X7R	

C4101	065G040210412K	Y	CAP 0402 100NF 10% 16V X7R	
C4100	065G040210412K	Y	CAP 0402 100NF 10% 16V X7R	
C7019	065G040210412K	Y	CAP 0402 100NF 10% 16V X7R	
C7006	065G040210412K	Y	CAP 0402 100NF 10% 16V X7R	
C4104	065G040210412K	Y	CAP 0402 100NF 10% 16V X7R	
C7012	065G040210412K	Y	CAP 0402 100NF 10% 16V X7R	
C7023	065G040210412K	Y	CAP 0402 100NF 10% 16V X7R	
C5005	065G040210412K	Y	CAP 0402 100NF 10% 16V X7R	
C7017	065G040210412K	Y	CAP 0402 100NF 10% 16V X7R	
C4109	065G040210412K	Y	CAP 0402 100NF 10% 16V X7R	
C6002	065G040210412K	Y	CAP 0402 100NF 10% 16V X7R	
C7038	065G040210412K	Y	CAP 0402 100NF 10% 16V X7R	
C7057	065G040210412K	Y	CAP 0402 100NF 10% 16V X7R	
C7020	065G040210412K	Y	CAP 0402 100NF 10% 16V X7R	
C4005	065G040210412K	Y	CAP 0402 100NF 10% 16V X7R	
C7054	065G040210412K	Y	CAP 0402 100NF 10% 16V X7R	
C4108	065G040210412K	Y	CAP 0402 100NF 10% 16V X7R	
C7014	065G040210412K	Y	CAP 0402 100NF 10% 16V X7R	
C7022	065G040210412K	Y	CAP 0402 100NF 10% 16V X7R	
C116	065G040210425K	M	CAP 0402 100NF 10% 25V X5R	
C7004	065G040210425K	T	CAP 0402 100NF 10% 25V X5R	
C7059	065G0402105A5K	A	CAP CHIP 0402 1UF K 10V X5R	
C4076	065G0402105A5K	A	CAP CHIP 0402 1UF K 10V X5R	
C4080	065G0402105A5K	A	CAP CHIP 0402 1UF K 10V X5R	
C127	065G0402105A5K	M	CAP 0402 1UF 10% 10V X5R	
C7050	065G0402105A5K	M	CAP 0402 1UF 10% 10V X5R	
C131	065G0402105A5K	M	CAP 0402 1UF 10% 10V X5R	
C119	065G0402105A5K	M	CAP 0402 1UF 10% 10V X5R	
C7035	065G0402105A5K	M	CAP 0402 1UF 10% 10V X5R	
C4050	065G040215031J	T	CAP CHIP 0402 15PF 50V J NPO	
C4051	065G040215031J	T	CAP CHIP 0402 15PF 50V J NPO	
C129	065G040220031J	F	CAP 0402 20PF 5% 50V NP0	
C130	065G040220031J	F	CAP 0402 20PF 5% 50V NP0	
C146	065G040222031J	T	CAP 0402 22PF 5% 50V NP0 UMK105 CG220JV	
C4091	065G0402224A5K	M	CAP 0402 0.22UF 10V X5R	
C4089	065G0402224A5K	M	CAP 0402 0.22UF 10V X5R	
C126	065G040233031J	F	CAP 0402 33PF 5% 50V NP0	
C125	065G040233031J	F	CAP 0402 33PF 5% 50V NP0	
C6017	065G040233131J	Y	0402 330PF J 50V NPO	
C6025	065G040233131J	Y	0402 330PF J 50V NPO	
C6013	065G040233131J	Y	0402 330PF J 50V NPO	
C6007	065G040233131J	Y	0402 330PF J 50V NPO	
C150	065G040247131J	A	CAP CHIP 0402 470PF J 50V NPO	
C138	065G040247131J	A	CAP CHIP 0402 470PF J 50V NPO	
C139	065G040247131J	A	CAP CHIP 0402 470PF J 50V NPO	
C149	065G040247131J	A	CAP CHIP 0402 470PF J 50V NPO	
C4028	065G040247312K	T	CAP 0402 47NF 10% 16V X7R	
C4026	065G040247312K	T	CAP 0402 47NF 10% 16V X7R	
C4027	065G040247312K	T	CAP 0402 47NF 10% 16V X7R	
C4032	065G040247312K	T	CAP 0402 47NF 10% 16V X7R	
C4031	065G040247312K	T	CAP 0402 47NF 10% 16V X7R	
C4025	065G040247312K	T	CAP 0402 47NF 10% 16V X7R	
C4030	065G040247312K	T	CAP 0402 47NF 10% 16V X7R	
C4029	065G040247312K	T	CAP 0402 47NF 10% 16V X7R	

C4024	065G040247312K T	CAP 0402 47NF 10% 16V X7R	
C135	065G040250931C F	CAP 0402 5PF 0.25PF 50V NP0	
C145	065G040250931C F	CAP 0402 5PF 0.25PF 50V NP0	
C144	065G040250931C F	CAP 0402 5PF 0.25PF 50V NP0	
C137	065G040250931C F	CAP 0402 5PF 0.25PF 50V NP0	
C143	065G040250931C F	CAP 0402 5PF 0.25PF 50V NP0	
C136	065G040250931C F	CAP 0402 5PF 0.25PF 50V NP0	
C147	065G060310031J F	CAP 0603 10PF 5% 50V NP0	
C6031	065G060310432K A	CAP 0603 100NF 10% 50V X7R	
C4106	065G060310432K A	CAP 0603 100NF 10% 50V X7R	
C6033	065G060310432K A	CAP 0603 100NF 10% 50V X7R	
C7011	065G060310432K F	CAP CHIP 0603 0.1UF K 50V X7R	
C6029	065G060310432K F	CAP CHIP 0603 0.1UF K 50V X7R	
C4102	065G060310432K F	CAP CHIP 0603 0.1UF K 50V X7R	
C7016	065G060310432K F	CAP CHIP 0603 0.1UF K 50V X7R	
C4103	065G060310432K F	CAP CHIP 0603 0.1UF K 50V X7R	
C7026	065G060310432K F	CAP CHIP 0603 0.1UF K 50V X7R	
C6004	065G060310432K F	CAP CHIP 0603 0.1UF K 50V X7R	
C7003	065G060310432K F	CAP CHIP 0603 0.1UF K 50V X7R	
C6023	065G060310512K T	CAP 0603 1UF 10% 16V X7R EMK107B7105KA	
C6006	065G060310512K T	CAP 0603 1UF 10% 16V X7R EMK107B7105KA	
C6009	065G060310512K T	CAP 0603 1UF 10% 16V X7R EMK107B7105KA	
C4010	065G060310512K T	CAP 0603 1UF 10% 16V X7R EMK107B7105KA	
C6021	065G060310512K T	CAP 0603 1UF 10% 16V X7R EMK107B7105KA	
C4033	065G060310512K T	CAP 0603 1UF 10% 16V X7R EMK107B7105KA	
C4090	065G060310522K M	CAP MLCC 0603 1UF K 25V X7R	
C4003	065G060310605M M	CAP 0603 10UF 20% 6.3V X5R	
C4060	065G060310605M T	CAP 0603 10UF 20% 6.3V X5R	
C4020	065G060310605M T	CAP 0603 10UF 20% 6.3V X5R	
C4073	065G060310605M T	CAP 0603 10UF 20% 6.3V X5R	
C4077	065G060310605M T	CAP 0603 10UF 20% 6.3V X5R	
C4009	065G060310605M T	CAP 0603 10UF 20% 6.3V X5R	
C4056	065G060310605M T	CAP 0603 10UF 20% 6.3V X5R	
C4053	065G060310605M T	CAP 0603 10UF 20% 6.3V X5R	
C4021	065G060310605M T	CAP 0603 10UF 20% 6.3V X5R	
C7063	065G060310605M T	CAP 0603 10UF 20% 6.3V X5R	
C4006	065G060322515K M	CAP 0603 2.2UF 10% 16V X5R	
C117	065G060347131J Y	CAP CHIP 0603 470P 50V NP0 +/-5%	
C6014	065G080510532K A	CAP 0805 1UF 10% 50V X7R	
C6010	065G080510532K A	CAP 0805 1UF 10% 50V X7R	
C6019	065G080510532K A	CAP 0805 1UF 10% 50V X7R	
C6026	065G080510532K A	CAP 0805 1UF 10% 50V X7R	
C7037	065G0805106A5K A	CAP 0805 10UF 10% 10V X5R	
C7025	065G0805106A5K A	CAP 0805 10UF 10% 10V X5R	
C7013	065G0805106A5K A	CAP 0805 10UF 10% 10V X5R	
C7053	065G0805106A5K A	CAP 0805 10UF 10% 10V X5R	
C7018	065G0805106A5K A	CAP 0805 10UF 10% 10V X5R	
C716	065G0805106A5K A	CAP 0805 10UF 10% 10V X5R	
C7056	065G0805106A5K A	CAP 0805 10UF 10% 10V X5R	
C7055	065G0805106A5K A	CAP 0805 10UF 10% 10V X5R	
C7024	065G0805106A5K A	CAP 0805 10UF 10% 10V X5R	
C6016	065G080522432K Y	CAP CHIP 0805 220N 50V X7R +/-10%	
C6001	065G080522432K Y	CAP CHIP 0805 220N 50V X7R +/-10%	
C6012	065G080522432K Y	CAP CHIP 0805 220N 50V X7R +/-10%	

C6024	065G080522432K Y	CAP CHIP 0805 220N 50V X7R +/-10%	
C7058	065G080522512K A	CAP 0805 2.2UF 10% 16V X7R	
C4075	065G080522605M T	CAP 0805 22UF 20% 6.3V X5R JMK212 BJ226	
C6020	065G120610532K M	CAP CHIP 1206 1UF K 50V X7R	
C6015	065G120610532K M	CAP CHIP 1206 1UF K 50V X7R	
C6018	065G120610532K M	CAP CHIP 1206 1UF K 50V X7R	
C7010	065G120622532K M	CAP 1206 2.2UF 10% 50V X7R	
C7009	065G120622532K M	CAP 1206 2.2UF 10% 50V X7R	
C6030	065G120622615K M	AP CHIP 1206 22UF K 16V X5R	
C7036	065G120622615K M	AP CHIP 1206 22UF K 16V X5R	
C6032	065G120622615K M	AP CHIP 1206 22UF K 16V X5R	
C7002	065G121010622K M	CAP 1210 10UF 10% 25V X7R	
C4004	067G 3112213CT	EC SMD 220UF 16V HV 6.3*7.7	
C7015	067G 3112213CT	EC SMD 220UF 16V HV 6.3*7.7	
C7052	067G 3112213CT	EC SMD 220UF 16V HV 6.3*7.7	
C120	067G311C1013CT	EC SMD 100UF 20% 16V RV 6.3*7.7	
C7008	067G311C1013CT	EC SMD 100UF 20% 16V RV 6.3*7.7	
C110	067G311C1013CT	EC SMD 100UF 20% 16V RV 6.3*7.7	
C6011	067G311R1014CT	EC 100UF 20% 25V 6.3*7.7	
HDCP-U407	070GHDCP500HDC	HDCP CODE	
FB7009	071G 56A221 TA	IND FXD 0805 EMI 100MHZ 220R R	
FB6002	071G 56D221 M	CHIP BEAD 0805 220R 25% 3000MA	
FB4004	071G 56K121 TA	CHIP BEAD 120R/6000MA HCB2012KF-121T60	
FB4007	071G 56K121 TA	CHIP BEAD 120R/6000MA HCB2012KF-121T60	
FB7002	071G 56K121 TA	CHIP BEAD 120R/6000MA HCB2012KF-121T60	
FB7003	071G 56K121 TA	CHIP BEAD 120R/6000MA HCB2012KF-121T60	
FB7012	071G 56K121 TA	CHIP BEAD 120R/6000MA HCB2012KF-121T60	
FB7005	071G 56K121 TA	CHIP BEAD 120R/6000MA HCB2012KF-121T60	
FB7004	071G 56K121 TA	CHIP BEAD 120R/6000MA HCB2012KF-121T60	
FB7007	071G 59A121 TA	CHIP BEAD 120R/3000MA HCB1608KF-121T30	
FB7017	071G 59A121 TA	CHIP BEAD 120R/3000MA HCB1608KF-121T30	
FB4014	071G 59A121 TA	CHIP BEAD 120R/3000MA HCB1608KF-121T30	
FB4012	071G 59A121 TA	CHIP BEAD 120R/3000MA HCB1608KF-121T30	
FB4010	071G 59A121 TA	CHIP BEAD 120R/3000MA HCB1608KF-121T30	
FB4011	071G 59A121 TA	CHIP BEAD 120R/3000MA HCB1608KF-121T30	
FB7013	071G 59A121 TA	CHIP BEAD 120R/3000MA HCB1608KF-121T30	
FB4001	071G 59A121 TA	CHIP BEAD 120R/3000MA HCB1608KF-121T30	
FB4013	071G 59A121 TA	CHIP BEAD 120R/3000MA HCB1608KF-121T30	
FB4017	071G 59A121 TA	CHIP BEAD 120R/3000MA HCB1608KF-121T30	
FB7016	071G 59A121 TA	CHIP BEAD 120R/3000MA HCB1608KF-121T30	
FB4025	071G 59A121 TA	CHIP BEAD 120R/3000MA HCB1608KF-121T30	
FB7015	071G 59A121 TA	CHIP BEAD 120R/3000MA HCB1608KF-121T30	
FB4015	071G 59A121 TA	CHIP BEAD 120R/3000MA HCB1608KF-121T30	
FB7006	071G 59A121 TA	CHIP BEAD 120R/3000MA HCB1608KF-121T30	
FB4024	071G 59A121 TA	CHIP BEAD 120R/3000MA HCB1608KF-121T30	
FB4023	071G 59A121 TA	CHIP BEAD 120R/3000MA HCB1608KF-121T30	
FB4008	071G 59A121 TA	CHIP BEAD 120R/3000MA HCB1608KF-121T30	
FB7011	071G 59A121 TA	CHIP BEAD 120R/3000MA HCB1608KF-121T30	
FB4016	071G 59A121 TA	CHIP BEAD 120R/3000MA HCB1608KF-121T30	
FB4020	071G 59A121 TA	CHIP BEAD 120R/3000MA HCB1608KF-121T30	
FB4021	071G 59A121 TA	CHIP BEAD 120R/3000MA HCB1608KF-121T30	
FB4022	071G 59A121 TA	CHIP BEAD 120R/3000MA HCB1608KF-121T30	
FB4002	071G 59D121 TA	CHIP BEAD 120R/600MA FCM1608KF-121T06	
L109	073G 63108CJT	CHIP IND 0.1UH 5% 0.3A 1R MLG1608BR10JT	

L110	073G 6333810M	CHIP INDUCTOR 0.33UH 10% 0.75R 100MA	
L104	073G 63478 5T	CHIP IND 0.47UH 5% 100MA 3.5R MLG1608SR	
L108	073G 63478 5T	CHIP IND 0.47UH 5% 100MA 3.5R MLG1608SR	
L6005	073G253S 61 T	SMD CHOKE 2.2UH 30% 0.0217R	
L6006	073G253S 61 T	SMD CHOKE 2.2UH 30% 0.0217R	
L6004	073G253S 89 M	SMD CHOKE 22UH 20% 0.0723R 2.6A	
L6003	073G253S 89 M	SMD CHOKE 22UH 20% 0.0723R 2.6A	
L6002	073G253S 89 M	SMD CHOKE 22UH 20% 0.0723R 2.6A	
L6001	073G253S 89 M	SMD CHOKE 22UH 20% 0.0723R 2.6A	
L102	073G253S901 T	SMD CHOKE - - 90R ACM2012-900-2P	
L103	073G253S901 T	SMD CHOKE - - 90R ACM2012-900-2P	
CN506	088G 34019K AT	HDMI HEADER R/A 19P BLACK H=8.4	
CN501	088G 34021A VA	HDMI V/T 21P 1*1 BLACK 10.5MM	
D101	093G 60505	SCHOTTKY BAT54C 0.2A 30V SOT-23	
ZD118	093G 64 37 N	VPORT0603100KV05	
ZD121	093G 64 37 N	VPORT0603100KV05	
ZD115	093G 64 37 N	VPORT0603100KV05	
ZD122	093G 64 37 N	VPORT0603100KV05	
ZD403	093G 64 37 N	VPORT0603100KV05	
ZD123	093G 64 37 N	VPORT0603100KV05	
ZD130	093G 64 37 N	VPORT0603100KV05	
ZD120	093G 64 37 N	VPORT0603100KV05	
ZD106	093G 64 37 N	VPORT0603100KV05	
ZD103	093G 64 37 N	VPORT0603100KV05	
ZD109	093G 64 37 N	VPORT0603100KV05	
ZD108	093G 64 37 N	VPORT0603100KV05	
ZD107	093G 64 37 N	VPORT0603100KV05	
ZD111	093G 64 37 N	VPORT0603100KV05	
ZD119	093G 64 37 N	VPORT0603100KV05	
ZD124	093G 64 37 N	VPORT0603100KV05	
ZD110	093G 64 37 N	VPORT0603100KV05	
ZD401	093G 64 37 N	VPORT0603100KV05	
ZD404	093G 64 37 N	VPORT0603100KV05	
ZD104	093G 64 37 N	VPORT0603100KV05	
ZD113	093G 64 37 N	VPORT0603100KV05	
ZD112	093G 64 37 N	VPORT0603100KV05	
ZD402	093G 64 37 N	VPORT0603100KV05	
ZD117	093G 64 37 N	VPORT0603100KV05	
ZD105	093G 64 37 N	VPORT0603100KV05	
ZD116	093G 64 37 N	VPORT0603100KV05	
ZD114	093G 39S911 T	ZENER BZX84-C5V6 5.6V 0.25W SOT-23	
ZD601	093G 64S500 SU	ESD MLVG04025R0QV05BP INPAQ	
ZD603	093G 64S500 SU	ESD MLVG04025R0QV05BP INPAQ	
ZD602	093G 64S500 SU	ESD MLVG04025R0QV05BP INPAQ	
ZD503	093G 64S500 SU	ESD MLVG04025R0QV05BP INPAQ	
ZD504	093G 64S500 SU	ESD MLVG04025R0QV05BP INPAQ	
ZD505	093G 64S500 SU	ESD MLVG04025R0QV05BP INPAQ	
ZD506	093G 64S500 SU	ESD MLVG04025R0QV05BP INPAQ	
ZD501	093G 64S500 SU	ESD MLVG04025R0QV05BP INPAQ	
ZD502	093G 64S500 SU	ESD MLVG04025R0QV05BP INPAQ	
D6003	093G 64S900 T	DIODE BAS316 SOD-323 PHILIPS	
D6001	093G 64S900 T	DIODE BAS316 SOD-323 PHILIPS	
D102	093G 64S904 T	SWITCHING BAS316RRG 4A 100V SOD323	
CN402	311GW125D03AAX	CONN 1.25MM 3P	

CN408	311GW125F40ACH	WAFER 1.25MM 40P V/T A12511WVA-SF-2*20PN	
CN701	311GW200A13ADJ	WAFER 2.0MM 13P T20038A-13-H011	
CN601	311GW250B04ADX	WAFER 2.5MM 4P R/A S2415-04RWA-K	
U401	356G0568216015	SCALER RTD2958IG-GR LQFP-216	
U701	356GD563005142	DC/DC AP3417CKTR-G1 1A 0.6V~0.9VIN SOT-2	
C4082	365G040222505M000T	CAP 0402 2.2UF 20% 6.3V X5R JMK105BJ225M	
C4078	365G040222505M000T	CAP 0402 2.2UF 20% 6.3V X5R JMK105BJ225M	
C4079	365G040222505M000T	CAP 0402 2.2UF 20% 6.3V X5R JMK105BJ225M	
C4042	365G0603225A2K000A	CAP 0603 2.2UF 10% 10V X7R	
C4038	365G0603225A2K000A	CAP 0603 2.2UF 10% 10V X7R	
C4037	365G0603225A2K000A	CAP 0603 2.2UF 10% 10V X7R	
C4044	365G0603225A2K000A	CAP 0603 2.2UF 10% 10V X7R	
C4041	365G0603225A2K000A	CAP 0603 2.2UF 10% 10V X7R	
C4043	365G0603225A2K000A	CAP 0603 2.2UF 10% 10V X7R	
C7061	367G311X101GCT	EC SMD 100UF/35V 20% 35V 6.3X7.7 2000 HR	
C7062	367G311X101GCT	EC SMD 100UF/35V 20% 35V 6.3X7.7 2000 HR	
C6005	367G311X101GCT	EC SMD 100UF/35V 20% 35V 6.3X7.7 2000 HR	
C6027	367G311X101GCT	EC SMD 100UF/35V 20% 35V 6.3X7.7 2000 HR	
X401	393G022SA35TXC	CRYSTAL --7M27000021 --10PPM --10PF	
	709T58010XS001C	COMSUMPTIVE ASSY	
	052G 2191 A	TAPE_OTHER(PET,PAPER,SECURITY,ETC…)	
	055G 100610	TIN CREAM W/O PB	
	Q52G170100700B00XW	MESH PRINTTING_PAPER	
E715	715G5801M0E000004K	MAIN BOARD PCB	
	Q45G7701009A0100HB	LLDPE WRAP	
	040G 457624 1B	SN LABEL	
	705TXDBCPF7	705 ASS’Y FOR BRAZIL PACKING	
	045G 77500	BARCODE RIBBON	
	045G 77501	BAR CODE RIBBON X300X75	
	085T 583113	GASKET	
	092GB1JX1A3EGC	BATTERY 1.5V LR03 AAA£¨LR03£© ALKALI	
	0M1G1030 6120	SCREW 3X6	
	0M1G1030 6120	SCREW 3X6	
	0M1G1030 6120	SCREW 3X6	
	0M1G1030 8120	SCREW	
	0M1G1740 16 47 CR3	SCREW	
	0Q1G 330 8 47 CR3	SCREW 3X8	
	0Q1G 930 10 47 CR3	SCREW M3X10	
	0Q1G 930 10 47 CR3	SCREW M3X10	
	0Q1G 930 10 47 CR3	SCREW M3X10	
SP01	378G0035566YAK	8 OHM 3.5W --100X27 --100 NO	
E38901	389G224A12N0IS	AC POWER CORD 1200 FOR BRAZIL	
ECN601	395G801304XC16	HARNESS 4P TO 2P+2P 200MM+200MM	
ECN701	395G801313XM73	HARNESS 13P-13P 100	
ECN8101	395G801406XY11	HARNESS 6P-6P 260	
ECN408	395G801830DC12	LVDS CABLE 40P TO 30P 230MM	
ECN408	395G801830XC12	LVDS CABLE 40P TO 30P 230MM	
ECN401	395G802210DC05	HARNESS 10P TO 4P+5P 500MM+450MM	
ECN401	395G802210XC05	HARNESS 10P TO 4P+5P 500MM+450MM	
	398GRABD7NEACR	REMOTE AOC RC2414704/01 ENGLISH	
	705TXDCK016	BASE SCREW ASS'Y	
	0Q1G 940 18 47 CR3	SCREW	
	Q45G88010TV08900X1	PROTECT BAG	
	X40G0001624 2A	LABEL FOR SCREW PE BAG	

	709G00XP000013	COMSUMPTIVE ASSY	
	052G 1185	MIDDLE TAPE (Y1200141)	
	Q45G 77 5	PE PACKING	
	052G 1185	MIDDLE TAPE (Y1200141)	
	052G 1185	MIDDLE TAPE (Y1200141)	
	Q45G 99606 24 ESD	INSULATING PE BAG	
E750	750GBV236E22D1N000	LCD TPM236H3-HGEL02 C2D FQ TPV	
	PLTVDE631UXC3	POWER BOARD	
	Z40G0002ALL01A	OTHER LABEL	
IC9102	056G 139 8	PHOTO-COUPLER PS2561DL1-1 CTR Q100~200%	
IC9102	056G 139 9	IC EL817M(X) PHOTOCOUPLER DIP-4	
NR9902	061G 58005 W	NTCR 5R 20% 3A THINKING	
C9901	063G107M47410M	CAP X2 470NF 20% 275V R46KI3470HAP1M	
FB9909	071G 55 21	FERRITE BEAD	
FB9909	071G 55 21 H1	BEAD 6.0*10 700R 25% BF-I60100R-706B	
L9901	073G 174192 L	LINE FILTER 30MH MIN LF-013589-2	
L9901	073G 174192 X	LINE FILTER 30MH MIN ET20 0.8A	
L8102	073G 253214 H	CHOKE COIL 47UH 10% L470R HA	
L8102	073G 253214 X	CHOKE COIL 47UH 10% ,HF	
F9901	084G 41 15 C	FUSE 3.15A 250V UDA-A3.15(PF)	
F9901	084G 41 15 L	FUSE 3.15A 250V 0215 3.15MXEP	
CN9901	087G 50147C DL	AC SOCKET V/T 2P ACT1MD-02BL4B006 H=14	
CN9901	087G 50147C HC	AC SOCKET V/T 2P DB-8-01 H=14MM	
D9109	093G 60334	SCHOTTKY SR506-44 5A 60V DO-201AD	
D9108	093G 60334	SCHOTTKY SR506-44 5A 60V DO-201AD	
D9113	093G 60335 HF	SCHOTTKY SR515-04 X0G 5A 150V DO-201AD	
D9111	093G 60335 HF	SCHOTTKY SR515-04 X0G 5A 150V DO-201AD	
D9108	093G 60519	DIODE SR560-MK23 5A/60V DO-27 SECOS	
D9109	093G 60519	DIODE SR560-MK23 5A/60V DO-27 SECOS	
CN9901	0Q1G 340 8140	SCREW Q1-SELF TAPING SCREW :Q X8.0	
CN8101	311GW200A06ABX	WAFER 2.0MM 6P	
CN9904	311GW250B13BBX	WAFER 2.5MM 13P R/A 35MM 7MM	
RV9901	361G0046621KZW	VARISTOR 620V 10%	
C9101	367G215X470PKZ002S	.C 47UF 20% 450V 12.5*36 2000 HR 420MA P	
C9102	367G215X470PKZ002S	.C 47UF 20% 450V 12.5*36 2000 HR 420MA P	
L9101	373G0253247H00	CHOKE COIL 3UH 15% DR8*8 5A	
L9102	373G0253247H00	CHOKE COIL 3UH 15% DR8*8 5A	
L9102	373G0253247X00	CHOKE COIL 3UH 15% DR8*8 5A	
L9101	373G0253247X00	CHOKE COIL 3UH 15% DR8*8 5A	
T9101	380GL19P048H00	X'FMR 800UH 8% 20UH EFD30 BCK-13029-HA	
T9101	380GL19P048N00	X'FMR 800UH 8% 20UH EFD30 YUVA-2069	
BD9101	393G0050460A05	BRIDGE GBL08-07 X0 4A 800V GBL	
D8101	393G0060A0400T	SCHOTTKY SR310-29 X0 3A 100V DO-201AD	
	705TXC57044	Q9101 ASS'Y	
Q9101_1	0M1G 930 8120	SCREW 3X8	
Q9101	357G0667650002	MOSFET TK5A65D 5A 650V TO220F	
HS9101	Q90G0219 4	HEAT SINK ÐÍ²Ä/PROFILE	
IC9103	056G 158501	IC AS431AN-E1 SOT23	
IC8501	056G 700 34	LED DRIVER PF7001S SOP-14	
Q8101	057G 763125	MOSFET AO4486 4.2A 100V SO-8	
R9143	061G0805000 JT	RST 0805 0.05R MAX 1/8W	
R9142	061G0805000 JT	RST 0805 0.05R MAX 1/8W	
R8103	061G0805000 JT	RST 0805 0.05R MAX 1/8W	
R9131	061G0805102 JT	RST CHIPR 1K OHM +- 5% 1/8W TZAI YUAN	

R8106	061G0805103 JT	RST 0805 10K 5% 1/8W	
R9124	061G0805103 JT	RST 0805 10K 5% 1/8W	
R9111	061G0805103 JT	RST 0805 10K 5% 1/8W	
R9114	061G0805104 JT	RST CHIPR 100KOHM +- 5% 1/8W TZAI YUAN	
R8111	061G08051302FT	RST CHIP 13K 1/8W 1%	
R9123	061G08051502FT	RST CHIP 15K 1/8W 1%	
R8119	061G0805154 JT	RST CHIP 150K 1/8W 5% TZAI YUAN	
R8102	061G08051803FT	RST CHIPR 180K +-1% 1/8W TZAI YUAN	
R9125	061G08051803FT	RST CHIPR 180K +-1% 1/8W TZAI YUAN	
R8108	061G0805201 JT	RST CHIPR 200OHM +-5% 1/8W TZAI YUAN	
R8105	061G0805229 JT	RST CHIPR 2R2 +-5% 1/8W TZAI YUAN	
R9122	061G08053301FT	RST CHIP 3K3 1/8W 1%	
R8117	061G08054701FT	RST CHIP 4K7 1/8W 1%	
R9121	061G0805471 JT	RST CHIPR 470OHM +-5% 1/8W TZAI YUAN	
R9141	061G08055100FT	RST CHIP R 510 OHM +-1% 1/8W	
R8101	061G08055102FT	RST CHIP 51K 1/8W 1%	
R8104	061G08057509FT	RST CHIP R 75OHM 1/8W +/-1%	
R9110	061G08057509FT	RST CHIP R 75OHM 1/8W +/-1%	
R9126	061G08059311FT	RST CHIPR 9.31KOHM +-1% 1/8W TZAI YUAN	
JR904	061G1206000 JF	RST CHIPR MAX0R05 1/4W FENGHUA	
JR901	061G1206000 JF	RST CHIPR MAX0R05 1/4W FENGHUA	
JR902	061G1206000 JF	RST CHIPR MAX0R05 1/4W FENGHUA	
JR903	061G1206000 JF	RST CHIPR MAX0R05 1/4W FENGHUA	
R8116	061G12061003FT	RST 1206 100K 1% 1/4W SMD1206100KF	
R8110	061G12061003FT	RST 1206 100K 1% 1/4W SMD1206100KF	
R8113	061G12061809FT	RST 1206 18R 1% 1/4W	
R9116	061G1206220 JT	RST CHIPR 22 OHM +-5% 1/4W TZAI YUAN	
R9117	061G1206220 JT	RST CHIPR 22 OHM +-5% 1/4W TZAI YUAN	
R9119	061G1206220 JT	RST CHIPR 22 OHM +-5% 1/4W TZAI YUAN	
R9139	061G1206220 JT	RST CHIPR 22 OHM +-5% 1/4W TZAI YUAN	
R9118	061G1206220 JT	RST CHIPR 22 OHM +-5% 1/4W TZAI YUAN	
R9115	061G1206220 JT	RST CHIPR 22 OHM +-5% 1/4W TZAI YUAN	
R9138	061G1206220 JT	RST CHIPR 22 OHM +-5% 1/4W TZAI YUAN	
R9140	061G1206220 JT	RST CHIPR 22 OHM +-5% 1/4W TZAI YUAN	
R9120	061G1206220 JT	RST CHIPR 22 OHM +-5% 1/4W TZAI YUAN	
R9113	061G1206221 JT	RST CHIPR 220 OHM +-5% 1/4W TZAI YUAN	
R9129	061G1206471 JT	ST CHIPR 470 OHM +-5% 1/4W TZAI YUAN	
R9108	061G1206479 JT	RST 1206 4.7R 5% 1/4W	
R9102	061G1206682 JT	RST CHIPR 6.8 KOHM +-5% 1/4W TZAI YUAN	
R9103	061G1206682 JT	RST CHIPR 6.8 KOHM +-5% 1/4W TZAI YUAN	
R9101	061G1206682 JT	RST CHIPR 6.8 KOHM +-5% 1/4W TZAI YUAN	
R9104	061G12068202FT	RST CHIPR 82KOHM +-1% 1/4W TZAI YUAN	
R9105	061G12068202FT	RST CHIPR 82KOHM +-1% 1/4W TZAI YUAN	
R9106	061G12068202FT	RST CHIPR 82KOHM +-1% 1/4W TZAI YUAN	
R9107	061G12068202FT	RST CHIPR 82KOHM +-1% 1/4W TZAI YUAN	
C8114	065G080510332K Y	CAP CHIP 0805 10N 50V X7R +/-10%	
C8108	065G080510332K Y	CAP CHIP 0805 10N 50V X7R +/-10%	
C9124	065G080510332K Y	CAP CHIP 0805 10N 50V X7R +/-10%	
C8105	065G080510432K Y	CAP CHIP 0805 100N 50V X7R +/-10%	
C9104	065G080510432K Y	CAP CHIP 0805 100N 50V X7R +/-10%	
C9112	065G080510432K Y	CAP CHIP 0805 100N 50V X7R +/-10%	
C8104	065G080510432K Y	CAP CHIP 0805 100N 50V X7R +/-10%	
C9114	065G080510432K Y	CAP CHIP 0805 100N 50V X7R +/-10%	
C8103	065G080510432K Y	CAP CHIP 0805 100N 50V X7R +/-10%	

C8109	065G080510432K Y	CAP CHIP 0805 100N 50V X7R +/-10%	
C9115	065G080510432K Y	CAP CHIP 0805 100N 50V X7R +/-10%	
C9110	065G080510432K Y	CAP CHIP 0805 100N 50V X7R +/-10%	
C9119	065G080510432K Y	CAP CHIP 0805 100N 50V X7R +/-10%	
C9106	065G080522131J Y	CAP CHIP 0805 220P 50V NP0 +/-5%	
C9123	065G080522232K Y	CAP CHIP 0805 2N2 50V X7R +/-10%	
C9107	065G080522232K Y	CAP CHIP 0805 2N2 50V X7R +/-10%	
C9117	065G080522432K Y	CAP CHIP 0805 220N 50V X7R +/-10%	
C8110	065G080547131J Y	CAP CHIP 0805 470P 50V NPO +/-5%	
C9108	065G120610272K Y	CAP 1206 1NF 10% 500V X7R	
D8104	093G 6433S	SWITCHING DIODE BAV99	
D8105	093G 6433S	SWITCHING DIODE BAV99	
D8106	093G 6433S	SWITCHING DIODE BAV99	
D8103	093G 6433S	SWITCHING DIODE BAV99	
IC9101	356G0379007217	AC/DC PF6200 S SOP-7	
R8121	361G08051059FT	RST 0805 10R5 1% 1/8W SMD080510R5F	
R8124	361G08051059FT	RST 0805 10R5 1% 1/8W SMD080510R5F	
R8125	361G08051059FT	RST 0805 10R5 1% 1/8W SMD080510R5F	
R8122	361G08051059FT	RST 0805 10R5 1% 1/8W SMD080510R5F	
R8123	361G08051059FT	RST 0805 10R5 1% 1/8W SMD080510R5F	
R9109	361G08051809FT	RST 0805 18 OHM 1% 1/8W SMD0805018RF	
D9104	393G006432S0HF	SWITCHING 1N4148W 0.15A 75V SOD-123	
D8102	393G006432S0HF	SWITCHING 1N4148W 0.15A 75V SOD-123	
D8103	393G006433P0HF	HF BAV99_R1_00001 0.5A 100V SOT-23	
D8104	393G006433P0HF	HF BAV99_R1_00001 0.5A 100V SOT-23	
D8105	393G006433P0HF	HF BAV99_R1_00001 0.5A 100V SOT-23	
D8106	393G006433P0HF	HF BAV99_R1_00001 0.5A 100V SOT-23	
ZD9104	393G039SA2400T	ZENER BZT52-B6V8 6.8V 0.41W SOD-123	
ZD9106	393G039SA2800T	ZENER BZT52-B36 36V -- --	
ZD9105	393G039SA2800T	ZENER BZT52-B36 36V -- --	
CN9901	006G 31500	EYELET	
C9101	006G 31502	EYELET	
L9901	006G 31502	EYELET	
RV9901	006G 31502	EYELET	
FOR C9901	006G 31502	EYELET	
C9102	006G 31502	EYELET	
T9101	006G 31502	EYELET	
Q8104	057G 417513 T	TRA 2N3904 TO-92	
Q8103	057G 417513 T	TRA 2N3904 TO-92	
Q9102	057G 417513 T	TRA 2N3904 TO-92	
Q8107	057G 417513 T	TRA 2N3904 TO-92	
Q8102	057G 417513 T	TRA 2N3904 TO-92	
Q8106	057G 417513 T	TRA 2N3904 TO-92	
Q8105	057G 417513 T	TRA 2N3904 TO-92	
R8118	061G 60210552T TZ	RST CFR 1M 1/6W 5%	
R8107	061G152M10852T SY	RST MOF 0R1 5% 2W	
R9112	061G152M43852T SY	RST MOFR 0.43 OHM +-5% 2WS FUTABA	
R9130	061G152M47152T SY	RST MOF 470R 5% 2W FUTABA	
R9901	061G212Y10552T SY	RST MGFR 1MOHM +-5% 1/2W FUTABA	
C9103	065G 1K22293S	CAP CER 2.2NF 10% 1KV R TAPING	
C9908	065G306K10123R	CAP Y1 100PF 10% 250V Y5P	
C9908	065G306K1012WR	CAP Y1 100PF 10% 250V Y5P CT7-Y1-250V-06	
C9904	065G306K22123R	CAP Y1 220PF 10% 250V Y5P	
C9907	065G306K22123R	CAP Y1 220PF 10% 250V Y5P	

C9906	065G306K22123R	CAP Y1 220PF 10% 250V Y5P	
C9906	065G306K2212WR	CAP Y1 220PF 10% 250V Y5P CT7-Y1-250V-06	
C9907	065G306K2212WR	CAP Y1 220PF 10% 250V Y5P CT7-Y1-250V-06	
C9904	065G306K2212WR	CAP Y1 220PF 10% 250V Y5P CT7-Y1-250V-06	
C9902	065G306K47123R	CAP Y1 470PF 10% 250V Y5P	
C9903	065G306K47123R	CAP Y1 470PF 10% 250V Y5P	
C9902	065G306K4712WR	CAP Y1 470PF 10% 250V Y5P CT7-Y1-250V-0	
C9903	065G306K4712WR	CAP Y1 470PF 10% 250V Y5P CT7-Y1-250V-0	
C9122	067G 5153314HT A	EC 330UF 20% 25V HSP331M1EG07VM6HTAP5	
C9113	067G 5153314HT A	EC 330UF 20% 25V HSP331M1EG07VM6HTAP5	
C8101	067G 5153314HT A	EC 330UF 20% 25V HSP331M1EG07VM6HTAP5	
C9109	067G 5153314HT A	EC 330UF 20% 25V HSP331M1EG07VM6HTAP5	
C9111	067G 5153314HT A	EC 330UF 20% 25V HSP331M1EG07VM6HTAP5	
C9116	067G 5153314HT A	EC 330UF 20% 25V HSP331M1EG07VM6HTAP5	
C9121	067G 5153314HT A	EC 330UF 20% 25V HSP331M1EG07VM6HTAP5	
C9105	067G 5154707KB	EC 47UF 20% 50V 6.3*11	
C8113	067G 5154709HT	EC 47UF 20% 100V 10*12	
C8113	067G 5154709KT	EC 47UF 20% 100V 10*12	
ZD9101	093G 39A0852T	GDZJ18B	
D9105	093G 6026T52T	CTIFIER DIODE FR107	
D9103	093G 6026T52T	CTIFIER DIODE FR107	
D9103	093G 60964	RECTIFIER PS1010R T/B 1A 1000V DO-41	
D9105	093G 60964	RECTIFIER PS1010R T/B 1A 1000V DO-41	
J904	095G 90 23	JUMP WIRE - -	
J919	095G 90 23	JUMP WIRE - -	
J915	095G 90 23	JUMP WIRE - -	
J907	095G 90 23	JUMP WIRE - -	
J909	095G 90 23	JUMP WIRE - -	
FB9906	095G 90 23	JUMP WIRE - -	
J903	095G 90 23	JUMP WIRE - -	
J930	095G 90 23	JUMP WIRE - -	
J912	095G 90 23	JUMP WIRE - -	
J918	095G 90 23	JUMP WIRE - -	
J929	095G 90 23	JUMP WIRE - -	
FB9908	095G 90 23	JUMP WIRE - -	
FB9905	095G 90 23	JUMP WIRE - -	
J921	095G 90 23	JUMP WIRE - -	
J924	095G 90 23	JUMP WIRE - -	
J916	095G 90 23	JUMP WIRE - -	
J914	095G 90 23	JUMP WIRE - -	
J906	095G 90 23	JUMP WIRE - -	
J908	095G 90 23	JUMP WIRE - -	
J923	095G 90 23	JUMP WIRE - -	
J922	095G 90 23	JUMP WIRE - -	
J905	095G 90 23	JUMP WIRE - -	
J920	095G 90 23	JUMP WIRE - -	
J925	095G 90 23	JUMP WIRE - -	
FB9907	095G 90 23	JUMP WIRE - -	
J926	095G 90 23	JUMP WIRE - -	
J917	095G 90 23	JUMP WIRE - -	
FB9903	095G 90 23	JUMP WIRE - -	
J902	095G 90 23	JUMP WIRE - -	
J911	095G 90 23	JUMP WIRE - -	
Q9102	357G0419040600	SMALLTRAN ST 2N3904 0.2A 40V TO-92	

Q8105	357G0419040600	SMALLTRAN ST 2N3904 0.2A 40V TO-92	
Q8106	357G0419040600	SMALLTRAN ST 2N3904 0.2A 40V TO-92	
Q8102	357G0419040600	SMALLTRAN ST 2N3904 0.2A 40V TO-92	
Q8103	357G0419040600	SMALLTRAN ST 2N3904 0.2A 40V TO-92	
Q8104	357G0419040600	SMALLTRAN ST 2N3904 0.2A 40V TO-92	
Q8107	357G0419040600	SMALLTRAN ST 2N3904 0.2A 40V TO-92	
R8107	361G152M10852T00TZ	RST MOF 0.1R 5% 2W MOF2W0R1JT52	
R9112	361G152M43852T00TZ	RST MOF 0.43OHM 5% 2W MOF2WS0R43JT52	
R9130	361G152M47152T00TZ	RST MOF 470OHM 5% 2W MOF2WS470RJT52	
R9901	361G212Y10552T00TZ	RST MGF 1M 5% 1/2W MG1/2W1MJT52E8	
E715	715G5804P01W20001M	POWER BOARD PCB	
M01101	Q11G701017000L00JY	PCB-SUPPORT	
M01101	Q11G701017000L00XL	PCB-SUPPORT	
	Q11T5024 1 GP	WIRE-CLIP	
	Q12G6082 3	FOOT PAD	
	Q36G060006204600JY	NON-WOVEN FABRIC	
	Q36G060006204700JY	NON-WOVEN FABRIC	
	Q36T 600 30 10	NONWOVEN FABRIC	
	Q36T 600 30 10	NONWOVEN FABRIC	
	Q36T 600 31 1	NONWOVEN FABRIC	
	Q40G 581689 4B	SN LABEL(58X35MM)	
	Q40T0001001 1A	SN LABEL	
	Q41G7800615B92	WARRANTY CARD	
	Q45G88010TV08500WN	PROTECT BAG	
	Q45G88010TV09100X1	PROTECT BAG	
	Q45G99010TV06600WN	PROTECT BAG	
	Q50G 500 TV005	CABLE TIE	
	Q52G130118600000YY	TAPE	
	Q52G15010TV0070WXW	TAPE_INSULATING	
	Q52G1501150523AWBK	TAPE_INSULATING	
	Q52G160119100A00YY	TAPE	
M05201	Q52G18010TV0500AJY	INSULATING SHEET	
M05201	Q52G18010TV0500AZA	INSULATING SHEET	
	Q85G 583195	GASKET	
	X15T8192101CKD00BL	BKT_VESA SGCC	
	X15T8235102CKD00YF	BKT_POWER_L SGCC	
	X15T8574201CKD00YF	BKT_HOLDER	
	X15T8601101CKD00BL	BKT_SPEAKER	
	X15T8603701CKDGMBL	BKT_IO	
	X15T8633101CKD00YF	BKT_KEY	
	X33T00210GM01GC100	COVER_CLOCK_REAR	
	X33T0051ADT01LC100	KEY_FUNCTION	
	X33T0052ADTZ1LC200	KEY_FUNCTION	
	X33T0074AKZ01C0100	LENS_IR	
	X34T0088ADT02LC100	BASE	
	X34T0089ADT01LC100	STAND	
	X34T0091ADTZ3LC1BA	BEZEL TV236WSL-13D-DA5-DA1 --- ---	
	X34T00920GM05KC101	REAR_COVER TV236WSL-13D-DA5-DA1 --- ---	
	X40G024061519A	RATING LABEL FOR LE24D1440/20 AOC BZ	
	X40G2013024X0900ZA	IO LABEL	
	X40G2013024X1000XY	LABEL IO	
	X41G24MV61515A	MANUAL LE24D1440/20	
	X41G78SV61528A	QSG LE24D1440	
	X44GKA161010FA	CUSHION-T	

	X44GKA162010FA	CUSHION-B	
	X44GKA1662402A	DIE CUT CARTON	
M05202	X52G18010TV18901BK	INSULATING SHEET	
M05202	X52G18010TV18901HK	INSULATING SHEET	