英华家电维修资料软件专用 购买QQ:505966338

维 修 手 册

品牌	机种
AOC	L32DS99X
	L42DS99X

英华家电维修资料软件专用 购买QQ:505966338

变更说明

版本	发布日期	变更说明	对外机种名	对内机种名
A00	2009-11-3	首次发布	L32DS99X	E329M1ND4WA6NN
			L42DS99X	E429M1ND4WA5NN
A01	2010-11-08	新增机种名	L32DS99X	E32921ND4WA3NN
			L42DS99X	E429M1ND4WA2NN

英华家电维修资料软件专用 购买QQ:505966338

目录

1.技术规格 ---- 04
1.1 一般规格 ---- 04
1.2 预设显示模式 ---- 05
2.操作说明 ---- 06
2.1 遥控器操作 ---- 06
2.2 控制面板 ---- 07
2.3 背面信源接口 ---- 08
2.4 侧边信源接口 ---- 09
2.5 菜单操作 ---- 10
3.工厂模式调整 ---- 32
4.故障处理流程 ---- 33
5.电气方框图 ---- 41
5.1 主板功能框图---- 41
5.2 主板电源框图---- 42
6.线路图 ---- 43
6.1 主板---- 43
6.2 电源板---- 60
6.3 按键板---- 69
6.4 IR 板---- 70
6.5 IPTV 板 ---- 71
7. BOM---- 78
7.1 L32DS99X ---- 78
7.2 L42DS99X ---- 146

英华家电维修资料软件专用 购买QQ:505966338

1.技术规格

1.1 一般规格

		L32DS99X	L42DS99X
图像/显示 长宽比 图像增强		16:9 逐行扫描, 3D 梳状滤波器(3D Comb Filter), 降噪,智能图像 (5 种模式)	
声音 最大输出功率(RMS) 声音增强 声音模式		2x10W 虚拟环绕 单声道, 立体声, 智能声音(4 种模式)	
方便性		自动搜台, 完全文字, 睡眠时间, 时钟	
屏幕语言		中文, 英文, 俄文	
连接 **背面**		HDMI 1 、HDMI 2 PC 输入 - VGA, 音频 Component 1, 2- 分量视频(YPbPr), 音频左/右输入 TV / RF , SPDIF输出 AV IN -视频输入,音频左/右输入 AV OUT-视频输出,音频左/右输出	
侧面		RJ45 、 USB1,2、 耳机 AV IN 2 - 音频左/右输入, 复合视频， S-Video HDMI 3	
纸箱尺寸 (W x H x D) mm		875X665X188	1112X792X200
TV尺寸 (W x H x D) mm	无底座	792.6X519.5X97	1015.3X648.6X96.7
	含底座	*本机不含底座	
净重（kg）		11.2kg	19.3 kg
毛重（kg）		13.1 kg	22.2 kg
电源 能耗 待机耗电 主电源		155W ≤ 1W 100-240V, 60-50Hz	230W ≤ 1W 100-240V, 60-50Hz
墙式安装		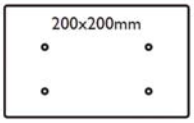	
		墙式安装需Metric6(10mm)螺丝 （不包含）	

英华家电维修资料软件专用 购买QQ:505966338

1.2 预设显示模式

计算机格式

编号	分辨率	模式	垂直频率 (Hz)	水平频率 (kHz)
1	640 x 480	VGA	59.940	31.469
2	800 x 600	VESA	60.317	37.879
3	1024 x 768	VESA	60.004	48.363
4	1280 x 720	CVT	59.855	44.772
5	1280 x 768	CVT	59.87	47.776
6	1280 x 1024	CVT	60.02	63.981
*7	1360 x 768	CVT	59.799	47.720
#8	1920x1080	CVT	60	66.587

*** 32"推荐分辨率, # 42"推荐分辨率.**

视频格式

编号	分辨率	模式	垂直频率 (Hz)	水平频率 (kHz)
1	720x480	CVI	29.97	15.734
2	720x480	CVI	59.94	31.469
3	720x576	CVI	25	15.625
4	720x576	CVI	50	31.25
5	1280x720	CVI	50	37.5
6	1280x720	CVI	60	45
7	1920X1080	CVI	25	28.125
8	1920X1080	CVI	30	33.75
9	720x480	HDMI	60	31.5
10	720x576	HDMI	50	31.25
11	1440x480	HDMI	60	31.5
12	1440x576	HDMI	50	31.25
13	1280x720	HDMI	50	37.5
14	1280x720	HDMI	60	45
15	1920X1080	HDMI	25	28.125
16	1920X1080	HDMI	60	33.75

英华家电维修资料软件专用 购买QQ:505966338

2.操作说明

2.1 遥控器操作

1. 信源按钮
按此按钮可以选择视频输入源：电视、COMP1、COMP2、电脑、HDMI1、HDMI2、HDMI 3、视频/S-端子、iTV。

2. 电源按钮
按此按钮可以打开或关闭液晶电视的电源，进入待机模式。

3. 数字按钮
在非iTV 信源按数字按钮可以直接进入电视频道。对于2位数频道，先输入第1位，然后输入第2位。
在iTV 信源数字按钮用作打字功能（在网络的超级搜索界面）。
*用作删除功能。

4. 回看按钮
按此按钮返回先前选择的频道。
按此按钮返回前一菜单。
#在iTV 信源用作切换输入法功能（在网络的超级搜索界面）。

5. HDMI按钮
按此按钮 HDMI 1、HDMI 2、HDMI3。

6. 分量信号按钮
按此按钮 分量信号1、分量信号2。

7. 视频按钮
按此按钮选择AV和S-端子。

8. 电视/电脑
按此按钮选择电脑输入源和电视频道。

9. 音量+ / 音量- 按钮
按此按钮可以增减音量。

10. 静音
按此按钮可以静音或恢复音频输出。

11. 缩放
按此按钮可以显示可用显示格式的列表。可用的显示格式由您所接收的信号类型确定。要选择想要的显示格式，请重复按格式按钮。

12. 节目+ /节目- 按钮
按此按钮可以选择上一个或下一个节目。

13. 丽音按钮
按此按钮可以将立体声和丽音立体声切换为单声。在双语节目中选择第一语言（双语I）或第二语言 （双语II）。
注意： 必须要在信号源带有这些声道的情况下，才能实现这样的功能。

14. 音质按钮
反复按此按钮选择4项设置之一：标准、音乐、摇滚、个人设定。

15. 画质按钮
反复按此按钮选择个人设定、鲜艳、标准、电影、节能等画面设置。

16. 睡眠按钮
按此按钮可以设置液晶电视，使其在特定时间内自动进入待机模式。

17. OK 按钮
在TV根目录下按OK将进入喜爱频道。
在菜单里按OK表示确定。

18. 上/下/左/右按钮
在菜单中导航。

19. 菜单按钮
按此按钮可以激活银幕菜单或退出银幕菜单。

20. 显示按钮
按此按钮可以在电视屏幕上显示当前频道信息。

21. 静止按钮
按此按钮冻结或解冻画面。
使用遥控器执行iTV功能。

22. iTV按钮
按此按钮直接切换到iTV信源。

23. 音乐幻灯按钮
按此按钮在浏览照片时播放音乐。

24. 声道切换按钮
按此按钮在多声道的视频中可以进行左右声道和立体声的切换。

25. 停止按钮 ■
按此按钮停止播放。

26. 暂停播放按钮 ▌▌
按此按钮暂停和播放。

27. 按钮 ◀◀
按此按钮快退。

28. 按钮 ▶▶
按此按钮快进。

29. 按钮 |◀◀
按此按钮到前一个。

30. 按钮 ▶▶|
按此按钮到下一个。

31. 返回按钮
按此按钮返回到上一层。

32. 播放菜单按钮
在播放视频和浏览图片的时候按此按钮显示播放菜单。

英华家电维修资料软件专用 购买QQ:505966338

2.2 控制面板

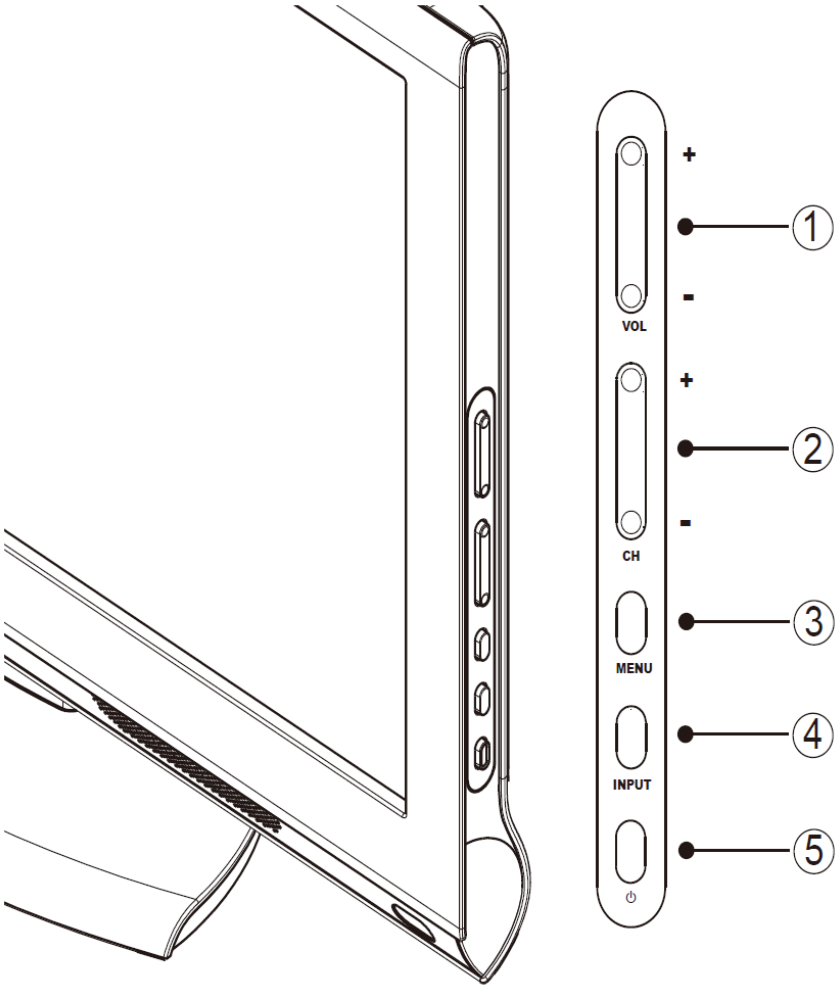

① VOLUME +/−：增加或降低音量。

② CH +/−：切换到下一或上一频道。

③ MENU:进入或退出菜单。

④ INPUT：选择输入信号的类型。

⑤ ⏻ POWER：打开或关闭TV。除非拔掉电源线，否则TV始终都不会完全关闭。

英华家电维修资料软件专用 购买QQ:505966338

2.3 背面信源接口

背面信源接口如下图：

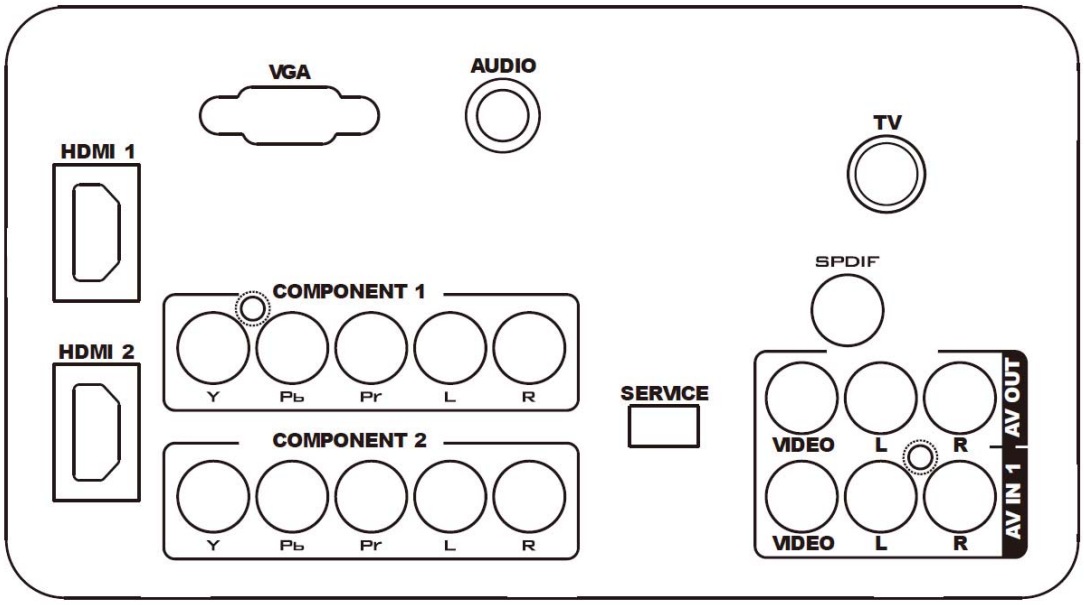

• SERVIC
用于软件更新。

• PC IN（VGA 和 AUDIO IN）
来自计算机的音频和视频输入。

• TV
天线、有线或卫星信号输入。

• AV IN
来自模拟或数字设备（如 DVD 播放机、卫星接收器和 VCR）的模拟音频和视频输入。

• AV OUT
到模拟设备（如其它电视机或录制设备）的音频和视频输出。

• Component（YPbPr和AUDIO L/R）
来自模拟或数字设备（如 DVD 播放机或游戏机）的模拟音频和视频输入。

• HDMI
来自高清数字设备（如 Blu-ray 播放机）的数字音频和视频输入。

• SPDIF
需要外接解码器(带数字解码输入的功放)进行解码的数字音频输出。

英华家电维修资料软件专用 购买QQ:505966338

2.4 侧边信源接口

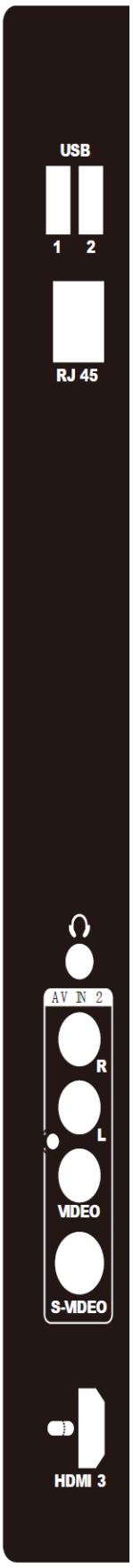

- USB：
支持部分视频、音频播放。

- AUDIO L/R
来自连接到 VIDEO 的模拟设备的音频输入。

- VIDEO
来自模拟设备（如 VCR）的复合视频输入。

- S-video
来自模拟设备（如 DVD、VCD）的 Y/C 分离信号输入。

- RJ45 的功能描述：RJ45 接口通过插入网线，连接到网络。

英华家电维修资料软件专用 购买QQ:505966338

2.5 菜单操作

使用TV

本节将帮助您执行基本的TV操作。

打开/关闭电视机或将其切换为待机

打开电视机

- 如果待机指示灯熄灭，请按电视机侧面的⏻。
- 如果待机指示灯将变为红色，请按遥控器上的⏻（待机-开机）。

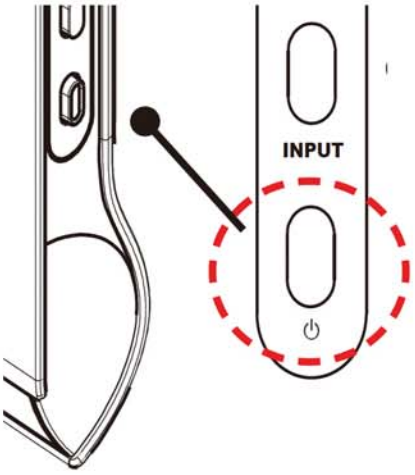

切换为待机模式

- 按遥控器上的⏻（开机-待机）。
  ↳ 待机指示灯将变为红色。

关闭电视机

- 按电视机侧面的⏻。
  ↳ 待机指示灯熄灭。

提示

尽管待机时电视机的耗电量很少，但电视机会继续耗电。当长时间不使用电视机时，请将电视机电源线与电源插座断开。

注意

如果您找不到遥控器，但又想从待机状态下打开电 视机，请按电视机侧面的CH。

切换频道

1 按遥控器上的节目+/-或电视机侧面的CH。

2 按（OK）进入喜好频道列表进行频道选择。

3 使用（数字按钮）输入频道编号。

注意

在使用喜好频道列表时，您只能选择列表(请参阅 17 页，为 ‘创建和使用收藏频道列表’）中的那些频道。

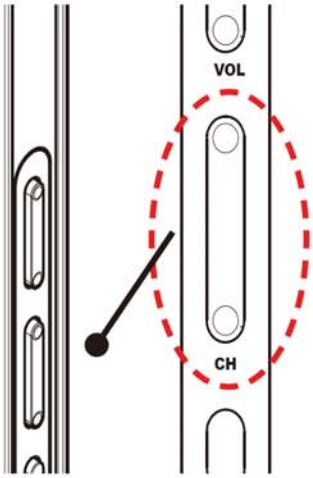

英华家电维修资料软件专用 购买QQ:505966338

观看连接的设备

注意
要轻松访问，请将新设备与电视机相连接，然后再选择它们。

使用信号源按钮。

1 按（信源）。
↳ 将显示信号源列表。

2 按上或下选择连接的设备。

3 按（OK）确认选择。

注意
根据机型不同，信号源列表也不同。

机型的信号源列表：

- 32″/42″：电视、分量信号1、分量信号2、电脑、HDMI1、HDMI2、HDMI3、视频输入1、视频输入2、S-端子、iTV。

调节电视机音量

提高或降低音量

1 按音量+/-。

2 按电视机侧面的 VOL。

静音或取消静音

1 按（静音）使音频静音。

2 再次按（静音） 恢复音频。

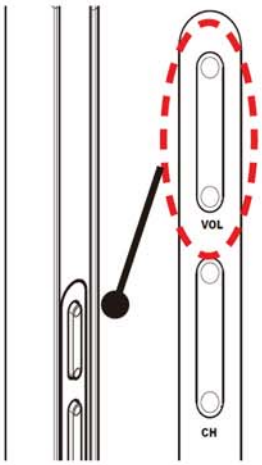

英华家电维修资料软件专用 购买QQ:505966338

TV的其它用途

访问电视机菜单

菜单可帮助您设定频道、更改画面和声音设置以及访问其它功能。

1 按(菜单)。
↳ 将显示菜单屏幕

2 按（上/下）键选择并浏览以下菜单之一。

- [图像]调整画面设置以便获得最佳观看效果。
- [声音]调整声音设置。
- [功能]访问不同功能，如定时器、电视锁。
- [设定]选择频道设定菜单、调整首选项和将电视机重置为出厂设置。

3 按（OK）确认选择。

提示
任何时候按菜单均会退出菜单。
按（返回）可后退一个屏幕。

更改画面和声音设置

更改画面和声音设置以适合您的喜好。您可以应用预定义的设置，也可以手动更改设置。

使用智能模式下的画面

使用智能模式下的画面应用预定义的画面设置。

1 按（画质）键
↳ 将显示[画质] 菜单。

2 按（上/下）键选择以下智能图像设置之一。

- [个人设定]调整画面为自定义的个人画面设置。
- [鲜艳]优化画面设置。
- [标准]调整画面设置以适应大多数环境和视频类型。
- [电影]应用最适合于观看电影的画面设置。
- [节能]应用低能耗画面设置。

3 按（OK）确认选择。
↳ 即会应用所选的智能图像设置。

英华家电维修资料软件专用 购买QQ:505966338

手动调整画面设置

1 按(菜单)

2 按(OK)以选择[图像]。
↳ 将显示[图像] 菜单。

3 按（上/下）键选择以下图像设置之一。

- [智能图像]访问预定义的智能图像设置。
- [对比度]调节亮区域的强度，暗区域保持不变。
- [亮度]调节暗区域的强度和细节。
- [色彩]调节色彩饱和度。
- [色度]补偿 NTSC 编码传输中的颜色变化。
- [清晰度]调节图像细节的清晰度级别。
- [降噪]过滤和消除图像中的杂信号。
- [色温]调节色温。
- [数位清晰]以数字方式将画面品质调整到最佳对比度、色彩和清晰度。
  - [动态对比度]自动增强图像中的对比度。推荐使用[中等]设置。
  - [动态背光]根据画面的亮阶情况动态调整背光来获取最佳观看效果。
  - [色彩增强]使色彩更加鲜艳，提高明亮色彩中细节部分的分辨率。您可以打开或关闭此功能。
- [画面格式]更改画面格式。
- [水平移动]针对 PC-VGA 或 CVI 输入水平调节画面。
- [垂直移动]针对 PC-VGA 或 CVI 输入垂直调节画面。
- [智能亮度]根据周围环境亮度的变化自动调节亮度（32″及其以上有此功能）。

注意
根据画面信号源格式的不同，一些画面设置不可用。

英华家电维修资料软件专用 购买QQ:505966338

更改画面格式

1 按（缩放）
↳ 将显示画面格式栏。

按此按钮可以显示可用显示格式的列表。

可用的显示格式由您所接收的信号类型确定。

2 按（上下）键或重复按（缩放）按钮选择画面格式。
↳ 即会激活所选的画面格式。

3 按（OK）确认选择。

画面格式摘要

可对画面格式进行设置。

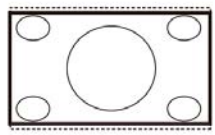
超放大屏幕

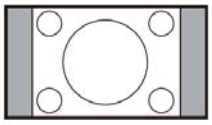
4:3

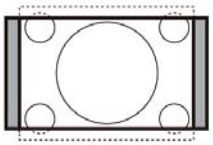
电影扩展14:9模式

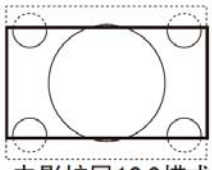
电影扩展16:9模式

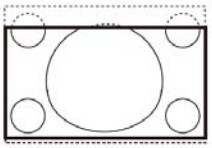
字幕放大

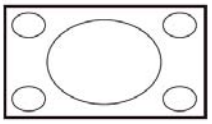
宽屏幕

字幕放大模式会使画面尽可能填满屏幕。建议您按光标向上/向下按钮调整屏幕上的画面位置使字幕显示出来。

注意

根据画面信号源格式的不同，一些画面设置不可用。

英华家电维修资料软件专用 购买QQ:505966338

使用智能模式下的声音

使用智能模式下的声音应用预定义的声音设置。

1 按（音质）
↳ 将显示[音质]菜单。

2 按（上/下）键选择以下智能声音设置之一。
- [标准]调整声音设置以适应大多数环境和音频类型。
- [音乐]应用最适合于播放音乐时的声音设置。
- [摇滚]应用最适合于播放摇滚时的声音设置。
- [个人设定]选择声音为菜单中自定义的设置。

3 按(OK)确认选择。
↳ 即会应用所选的智能声音设置。

调整声音设置

1 按（菜单）。

2 按（上/下）键选择[声音]。
↳ 即将显示 [声音] 菜单。

3 按（上/下/左/右）键选择和调整：
- [智能声音]访问预定义的智能声音设置。
- [低音]调节低音级别。
- [高音]调节高音级别。
- [音量]调节音量。
- [平衡]调节左右扬声器的平衡，以便最适合您的倾听位置。
- [双语 I-II]播放双语声音时选择音频语言。
- [单声/立体声]播放立体声时选择单声或立体声。
- [环绕]启用空间声。
- [自动音量]自动减小突然性的音量变化，比如更换频道时。 启用后会产生更加一致的音量。
- [差异音量]均衡不同频道或已连接设备之间的音量差异。更改差音量之前，请切换到所连接的设备。

注意
根据画面信号源格式的不同，一些声音设置不可用。

英华家电维修资料软件专用 购买QQ:505966338

创建和使用收藏频道列表

您可以创建最喜爱的电视频道和电台的列表，以便可以轻松地找到这些频道。

提示

您最多可以在电视机上创建并储存四个收藏列表。

选择收藏列表

1 观看电视时，按（OK）键以显示频道选项菜单。

2 按确认以选择[显示喜好频道]。
↳ 将显示收藏列表。

3 按（上/下）键以选择收藏列表。

4 按（OK）。
↳ 显示收藏列表中的频道。

向收藏列表中添加频道

1 观看电视时，切换到您要添加到收藏列表 （请参阅11页, 为‘切换频道’）中的频道。

2 按 (OK)。将显示频道选项菜单。

3 按（上/下）键以选择 [标记为喜好频道]。

4 按(OK)键确认。
↳ 将显示收藏列表。

5 按（上/下）键选择要向其中添加频道的收藏列表。

6 按（OK）键确认。
↳ 即会将频道添加到收藏列表中。

从收藏列表中移除频道

注意

在移除频道前，请选择该频道所在的收藏列表。

1 观看电视时，按（OK）键。
↳ 将显示频道选项菜单。

2 按（OK）以进入 [显示喜好频道]。

3 按上下键选择收藏列表，然后按确认进入该列表。

4 按（上/下）键选择要从列表中移除的频道。

5 按（OK）选中。

6 再按（OK）键。
↳ 将显示频道选项菜单。

7 按（上/下）键以选择[取消喜好频道]。

8 按[是]。
↳ 即会从收藏列表中移除频道。

英华家电维修资料软件专用 购买QQ:505966338

使用定时器

您可以设置定时器，以便在指定的时间打开电视机或切换到待机模式。

电视机自动切换到待机模式（睡眠定时器）

睡眠定时器会在预定义的一段时间后将电视机切换为待机模式。

1 按（菜单）。

2 选择[功能] > [睡眠定时器]。
↳ 将显示[睡眠定时器]菜单。

3 按左右键以设置睡眠时间。
↳ 睡眠定时器最多可以设置为180分钟，步长为5分钟。如果设为零分钟，则睡眠定时器关闭。

4 按（OK）启动睡眠定时器。
↳ 电视机将在预定义的一段时间后切换到待机模式。

提示
您始终可以提前关闭电视机，或在倒计时期间重新设定睡眠定时器。

自动打开电视机（开机定时器）

您可以在指定时间从待机模式自动打开电视机，并切换到指定频道。

1 按（菜单）。

2 选择[功能] > [开启定时器]。

3 按右键以进入 [开启定时器] 菜单。

4 按（上/下/左/右）键以选择[启用]并设置一周中的某一天或频率。

5 按（OK）确认。

6 按（上/下/左/右）键以选择[时间]并设置开始时间。

7 按 [完成] 确认。

8 按（上/下/左/右）键以选择[节目编号]并设置频道。

9 按（OK）确认。

10 按菜单键退出。

提示
选择 [关闭] 可关闭 [开启定时器]。
当 [开启定时器] 关闭后，仅 [启用] 选项可用。
在激活 [开启定时器]功能前，请设置电视机时钟。

英华家电维修资料软件专用 购买QQ:505966338

使用电视机时钟

您可以在电视机屏幕上显示一个时钟。

设置电视机时钟

1 按（菜单）键。

2 选择［功能］>［时钟］。
↳ 将显示［时钟］菜单。

3 按（上/下/左/右）键或（数字按钮）以输入时间。

4 按［确定］确认。

5 按 （菜单）键退出。

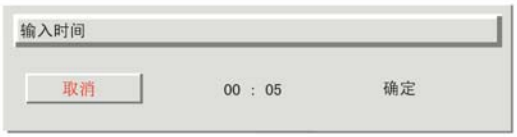

时钟功能（显示当前时间）

1 按（OK）键

2 选［时钟］

3 确认即可。

调节菜单透明度：

1.按（菜单）。

2.选择[功能]>[菜单透明度]
↳ 将显示［关闭]/[最小]/[中等]/[最大]

3.按(上/下)键选择.

4.按（OK）确认

英华家电维修资料软件专用 购买QQ:505966338

使用儿童控制锁

通过锁定电视机控件，您可以禁止儿童观看特定的节目或特定的频道。

设置或更改电视锁密码

1 按（菜单）键

2 按（上/下/左/右）键以选择 [功能] > [设定密码]。

3 使用（数字按钮）输入密码。

4 在新对话框中重新输入相同的密码以进行确认。
↳ 如果密码设置成功，该对话框将消失。但是，如果无法设置密码，将会显示一个新对话框， 提示您重新输入密码。

5 如果要更改密码，请选择 [功能] > [更改密码]。

6 使用（数字按钮）输入您的当前密码。
↳ 如果密码有效，则会显示一个新对话框，提示您输入新密码。

7 使用（数字按钮）输入新密码。
↳ 将显示一条消息，提示您重新输入新密码以进行确认。

注意：
当忘记密码时，可输入万能密码“0000”来解锁。

锁定或解除锁定所有频道和已连接的设备

1 按（菜单）键

2 按（上/下/左/右）键以选择[功能] > [电视锁]。

3 按（上/下）键选择 [锁定] 或 [解锁]。

4 按（OK）。
↳ 将锁定或解除锁定所有频道和已连接的设备。

5 按（菜单）键退出。

待机传输功能

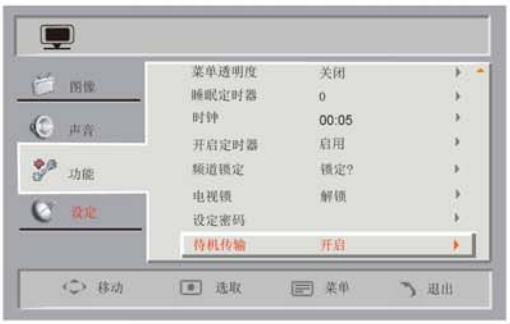

1.按（菜单）键

2.按（上/下/左/右）键以选择[功能] > [待机传输]。

3.按（OK）键开启待机传输功能。

4.此时TV进入待机下载模式，关闭屏幕，后台处于下载模式。

说明：
待机传输功能只在iTV信源下存在。
待机传输功能主要用于待机下载电影，节省电能。

英华家电维修资料软件专用 购买QQ:505966338

更改电视机首选项

1 按（菜单）键 。

2 选择[设定] > [首选项]。

3 进入 [首选项]。

- [位置]优化电视机设置以适合您的位置 – 家中或商店。
- [音量条] 调节音量时显示音量条。
- [设备互连] 在兼容设备之间实现同步播放和同步待机。
- [电子标签]仅适用于商店模式。设置电子标签的位置。

4 按（上/下）键选择您的首选项。

5 按（OK）进入选项，进行设置。

6 按（菜单）键退出。

将电视机重置为出厂设置

您可以恢复电视机的默认画面和声音设置。 频道设定设置保持不变。

1 按（菜单）键。

2 选择 [设定] > [出厂设置]。

3 按右键以进入 [出厂设置] 菜单。
↳ 将突出显示 [重置]。

4 按（OK）重置为出厂设置。

5 按（菜单）键退出。

显示软件版本

1 按（菜单）键。

2 选择 [设定] > [当前软件]。

3 按（OK）。
↳ 将显示软件版本 。

英华家电维修资料软件专用 购买QQ:505966338

安装频道

首次设置电视机时，电视机会提示您选择菜单语言并设定电视机的使用模式。本章介绍重新设定和微调频道的方法。

自动安装频道

本节介绍自动搜索和储存频道的方法。

第 1 步：选择菜单语言

注意
如果语言设置正确，则可以跳过此步骤。

1 按菜单键。
2 选择[设定] > [菜单语言]。
3 按向（右）键以进入 [菜单语言]。
4 按（上/下）键选择语言设置。
5 按（OK）确认。
6 按（菜单）键退出。

第 2 步：设定频道

1 按（菜单）键。
2 选择 [设定] > [频道设定] > [频道助手]。
3 选择[开始]并按（OK）以重新设定频道。
4 如果您要停止搜索，请选择 [停止] 并按（OK）。
↳ 将显示一个对话框，询问您是否确实要 [停止] 或 [继续] 该过程。
5 按（左/右）键选择[停止] 或 [继续]。
6 按（OK）确认选择。
7 完成后，按（菜单）键退出。

英华家电维修资料软件专用 购买QQ:505966338

手动安装频道

本节介绍手动搜索和储存模拟电视频道的方法。

1 按（菜单）键。

2 选择[设定] > [频道设定] > [模拟：手动]
↳ 将显示 [模拟：手动] 菜单。

3 按上下键选择您要调整的项目。
- [彩色制式]
- [声音系统]
- [搜索]
- [微调]
- [储存当前频道]
- [储存新频道]

第 1 步：选择系统

注意
如果系统设置正确，则可以跳过此步骤。

1 按（菜单）键。

2 选择[设定] > [频道设定] > [模拟：手动]
↳ 将显示 [模拟：手动] 菜单。

3 按（上/下）键选择并进入[彩色制式]。

4 按（上/下）键选中彩色制式的类型之后，按（OK）确认。

5 按（上/下）键选择并进入[声音系统]。

6 按上下选中声音系统的类型之后，按（OK）确认。

7 按（菜单）键退出。

第 2 步：搜索并储存新的电视频道

1 按（菜单）键。

2 选择[设定] > [频道设定] > [模拟：手动]。
↳ 将显示 [模拟：手动] 菜单。

3 按（上/下）键选择并进入[搜索]。

4 按（上/下）键或使用（数字按钮）手动输入三位数的频率。

5 按（OK）以开始搜索。

6 发现新频道时搜索停止，按左键返回上级。

7 按（上/下）键选择 [储存新频道]，以将新频道储存为新的频道编号。

8 按（左/右）键选择[是]并按（OK）以储存新频道。

9 按（菜单）键退出。

英华家电维修资料软件专用 购买QQ:505966338

微调模拟频道

1 按（菜单）键。

2 选择[设定] > [频道设定] > [模拟：手动]。
↳ 将显示 [模拟：手动] 菜单。

3 按（上/下）键选择并进入[微调]。

4 按（上/下）键以调整频率。

5 完成后按（OK）确认。

6 按（上/下）键选择并进入[储存当前频道]以储存该频道编号。

7 按（左/右）键选择[是]并按（OK）确认以储存当前频道。

8 按（菜单）键退出。

英华家电维修资料软件专用 购买QQ:505966338

iTV功能

您可以通过该功能读取移动存储设备上的视频，音乐，图片等文件或从网络上浏览和下载电影。

1.按【信源】，使用向上/向下按钮选择iTV。
2.使用左/右按钮选择网络媒体中心/本地磁盘/设置。
3.使用【OK】按钮进入。

设置:

为了更好的使用iTV的功能，我们建议您使用前，先进入“设置”菜单，对系统各项参数进行设置。

1.在主界面，使用左/右按钮选择设置图标，按【OK】键，进入设置界面。
2.使用向上/向下按钮选择菜单项目。
3.使用</向左和>/向右按扭更改设置。
4.使用确认按扭存储设定。

注意:
1. 如果选择“恢复默认设置”项目并按“确认”按钮，将恢复至原始出厂设置。
2. 在设置中的下载功能执行卸载，会只显示本地磁盘/设置。如果发现没有网络媒体中心，请在下载功能中执行安装。

英华家电维修资料软件专用 购买QQ:505966338

网络设置：

A.【有线网络设置】：

1. 插上网线。

2. 选择设置中网络设置的有线网络设置。

3. 根据需要设置IP地址为自动获取IP或手动配置。

B.【无线自动配置】：

1. 插上AOC专用的无线USB网卡。

2. 选择设置中网络设置的无线自动扫描。

3. TV会自动搜索周围环境中存在的无线网络，显示周围环境存在的无线网络。

4. 选择需要连接的无线网络，使用【OK】键进行登陆，如果存在密码，则需要输入密码进行验证。

5. 密码输入完成后，使用上下左右键选择密码输入界面的Done按钮，按【OK】键进行验证。

6. 网络连接成功，会显示网络的IP地址、子网掩码和无线MAC地址等相关网络属性。

C.【无线手动配置】：

1. 插上AOC专用的无线USB网卡。

2. 选择设置中网络设置的无线手动配置。

3. 在无线手动配置手动设置界面输入无线网络名称，选择加密方式(WPA)，输入密码，按【OK】键进行连接。

4. 网络连接成功，会显示网络的IP地址、子网掩码和无线MAC地址等相关网络属性。

英华家电维修资料软件专用 购买QQ:505966338

网络媒体中心：

1.使用</向左、 >/向右按钮选择网络媒体中心。

2.按OK按钮打开网络媒体中心。

3.使用向上/向下按钮选择【排行榜】、【超级搜索】、【正在下载】、【看电影】、【下载设置】菜单项。

4.然后按确认按钮打开它。

A.【排行榜】

1. 使用向上/向下按钮选择排行榜菜单项。

2. 按OK按钮进入排行榜。

3. 在排行榜中，有十四种分类电影可供您选择：热门电影、最新电影、大陆电影、港台电影、日韩电影、欧美电影、热门剧集、大陆剧集、港台剧集、日韩剧集、欧美剧集、热门卡通、综艺节目、电视节目。

4. 选择喜欢的电影类型，按“OK”键进入，获取下载列表。如选择“热门电影”按“OK”键进入，获取“热门电影”下载列表和“热门电影”的下载图片信息。

5. 获取“热门电影”下载列表完毕。

6. 按“上/下”键选择喜好的影片，选中后按“OK”键确认，系统自动添加到下载列表并开始下载。

7. 以此类推，用户可以添加多项下载任务，添加完毕TV自动下载，无须再进行任何操作。但是同时只能下载3 个任务。

8. 如果想查看下载任务的进程，可退出“排行榜”功能，进入“正在下载”功能查询和控制。

英华家电维修资料软件专用 购买QQ:505966338

B.【超级搜索】

1. 使用向上/向下按钮选择超级搜索菜单项。
2. 按OK按钮进入超级搜索。

通过提示使用遥控器输入你想搜索的电影，如输入“疯狂的石头”，输入完成后按“OK”键确认，TV自动搜索种子文件。
TV搜索到种子文件后，按“OK”键，TV会弹出添加下载任务的界面，通过上下键选择需要下载的内容。按“OK”键，TV自动添加到下载列表并开始下载。
如果提示“磁盘空间不足”，则需要更换磁盘或者删除部分内容，重复上述操作。
如果想查看下载任务的进程，可退出“超级搜索”功能，进入“正在下载”功能查询和控制。
（注：您需要成功连接到网络后才能进行该部分的操作，连接网络操作见设置的【网络设置】部分。）

C.【正在下载】

1. 使用向上/向下按钮选择正在下载菜单项。
2. 按OK按钮进入正在下载。
3. 下载任务列表可以查看下载任务的状态、文件名称、进度、大小、下载速度信息。
4. 在“正在下载”功能中，用户可以查看、暂停、停止、删除下载任务，对下载列表进行控制。
5. 下载任务的速度根据用户的网络速度而定。
6. 按“返回”键可退出下载任务列表，退出后下载任务仍然在进行，您可以一边欣赏存储设备中的音乐或电影，一边等待“正在下载”的电影下载

D.【看电影】

1. 使用向上/向下按钮选择下载完成菜单项。
2. 按OK按钮进入下载完成。
3. 进入下载电影存放的存储设备，选择观看已经下载完成的电影。

E.【下载设置】

1. 使用向上/向下按钮选择下载设置菜单项。
2. 按OK按钮进入下载设置。
3. 如果有多个存储分区，按左右键可以选择下载电影的存放路径。
4. 如果需要设置下载限速，按左右键可以选择各种限速方案。

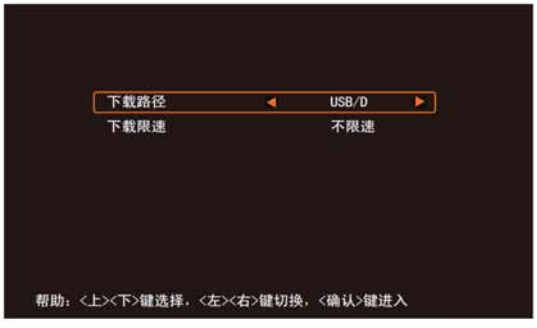

英华家电维修资料软件专用 购买QQ:505966338

多媒体文件操作：

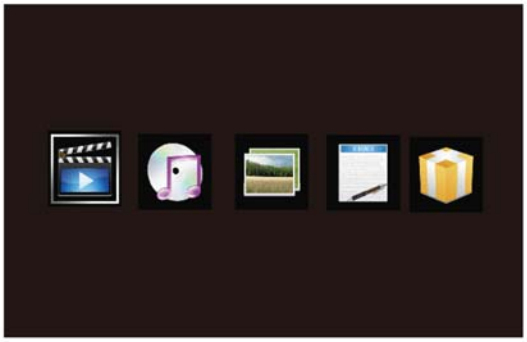

1. 请插入USB存储设备。
2. 选择本地磁盘。
3. 选择您所要操作的磁盘。然后按确认按钮打开它。
4. 您可以根据需要使用</向左和>/向右按钮选择“电影”、“音乐”、“图片”、“文本”或“文件”。

注意：
1. 数字多媒体播放器的USB接口并非万能的，若出现不识别的情况，不属于本机故障，与设备的驱动有关。
2. 随着设备的不同，存储容量的不同，播放器读取信息所需要的时间也是不一样的，有可能出现信息读取速度暂时变慢，请注意这并非本机故障。
3. 本机的USB接口提供5V电压，最大电流为500mA，某些存储设备由于采用的接口规范与标准USB协议有差异，因而会影响到数字多媒体播放器的正确识别，这属于正常现象。
4. USB可同时作为软件升级接口。
5. 多媒体播放时建议先切换到多媒体信号源，等初始化完成，多媒体菜单正常显示后再接存储设备。
6. 在此系统中，NTFS类型只能读取，不能写入。
7. 选择“图片”图标时，可以搜索最多4级文件夹中的文件，否则可以搜索最多8级文件夹中的文件。

A【播放电影】：

1. 使用</向左、 >/向右按钮选择电影图标。
2. 打开音乐文件夹。
3. 选择您所要操作的磁盘。然后按确认按钮打开它。
4. 使用向上/向下按钮选择所需的电影，等候几秒钟，然后即可在小窗口中预览它。
5. 按确认按钮进行播放。

英华家电维修资料软件专用 购买QQ:505966338

播放菜单：

1. 播放电影后，可以按播放菜单按钮打开播放OSD。
2. 您可以在“设置”菜单中选择重复模式：重复一个或重复所有。

3. 播放OSD

⏮ 选择此按钮播放上一部。
◀◀在播放期间选择后退速度（x2、x3、x4）。
▶ 选择此按钮播放/⏸选择此按钮暂停。
▶▶在播放期间选择前进速度（x2、x3、x4）。
⏭ 选择此按钮播放下一部。
■ 选择此按钮停止。
🔍选择此按钮选择缩放（x2、x3、x4）。
选择开启或关闭字幕。
00:00:28显示已播放时间。

B.【播放音乐】：

1. 使用</向左、 >/向右按钮选择音乐图标。
2. 打开音乐文件夹。
3. 选择您所要操作的磁盘。然后按确认按钮打开它。
4. 使用向上/向下按钮选择所需的音乐。等候几秒钟，
然后即可在小窗口中播放它。
5. 您可以在“设置”菜单中选择重复模式：重复一个或重复所有。

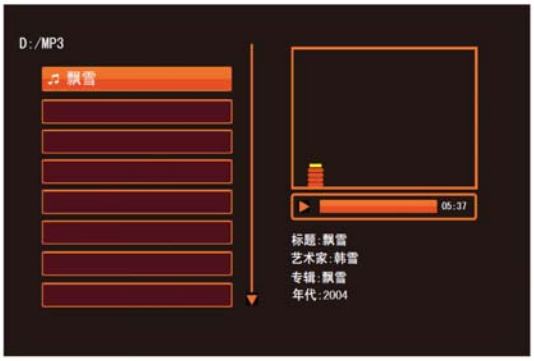

C.【播放图片】：

1. 使用</向左、 >/向右按钮选择图片文件夹。
2. 打开图片文件夹。

查看照片：

1. 使用</向左、 >/向右、 向上/向下按钮选择所需的照片。
2. 按确认按钮进行查看。

英华家电维修资料软件专用 购买QQ:505966338

播放菜单：

1. 播放图片后，可以按播放菜单按钮打开播放OSD。

2. 您可以在“设置”菜单中选择图片显示速度和图片显示方式。

播放OSD：

1. 播放照片后，可以按OK或播放菜单按钮打开播放OSD。

2. 您可以在“设置”菜单中选择重复模式。

3. 播放OSD

⏮ 选择此按钮播放上一张照片。
▶ 选择此按钮播放/ ⏸ 选择此按钮暂停。
⏭ 选择此按钮播放下一张照片。
↻ 选择此按钮旋转照片。
■ 选择此按钮停止。
🔍 选择此按钮选择缩放（x2、x4、x8、x16）。

D.【打开文本】：

1. 使用</向左、 >/向右按钮选择文本图标。

2. 打开文本文件夹。

3. 选择您所要操作的磁盘。然后按确认按钮打开它。

查看文本：

1. 按确认按钮进行查看。

2. 使用</向左、 >/向右、 向上/向下按钮进行翻页。

E.【打开文件】：

1. 使用</向左、 >/向右按钮选择文件图标。

2. 打开文件文件夹（多媒体节目列表）。

3. 选择您所要操作的磁盘。然后按确认按钮打开它。

（多媒体节目列表）

1. 使用向上/向下光标选择菜单项目。

2. 按确认按钮确认所作的选择。

英华家电维修资料软件专用 购买QQ:505966338

复制功能：

1. 使用向上/向下光标选择菜单项目和文件。
2. 如果是文件，按向右按钮。
3. 按 播放菜单按钮打开子菜单。
4. 使用向上/向下光标选择“复制”项目。
5. 按确认按钮，列出目的地列表。
6. 使用向上/向下光标选择菜单文件夹。按向右按钮进入文件夹。
7. 用户选择了目的地文件夹后，按OK按钮执行复制功能。
8. 复制完毕后，显示“完成”。按OK按钮关闭子菜单并返回文件列表。

删除功能：

1. 使用向上/向下光标选择菜单项目和文件。
2. 如果是文件，按向右按钮。
3. 按 播放菜单按钮打开子菜单。
4. 使用向上/向下光标选择“删除”项目，按OK按钮。
5. 确认是否删除文件。
6. 文件删除完毕后，按OK按钮返回文件列表。光标移到当前文件夹的第一个文件。

（注：如果播放电影、浏览图片和播放歌曲时后台有下载任务，可能会有播放不流畅的现象，如出现这种现象，请暂停或删除下载任务。）

本地(C:) 系统自带的2G Flash，具体的操作类似与存储设备的操作，故不做重复介绍。

英华家电维修资料软件专用 购买QQ:505966338

3.工厂模式调整

进入工厂模式的方法：先按遥控器上的“菜单”键，再按 1→9→9→9。

此 2 个机种无需调白平衡。

CCT @ TV	x	y
Normal	0.289 ± 0.015	0.291 ± 0.015
Cool	0.278 ± 0.015	0.278 ± 0.015
Warm	0.314 ± 0.015	0.319 ± 0.015

CCT @ others	x	y
Normal	0.289 + 0.015	0.291 + 0.015
Cool	0.278 + 0.015	0.278 + 0.015
Warm	0.314 + 0.015	0.319 + 0.015

英华家电维修资料软件专用 购买QQ:505966338

4.故障处理流程

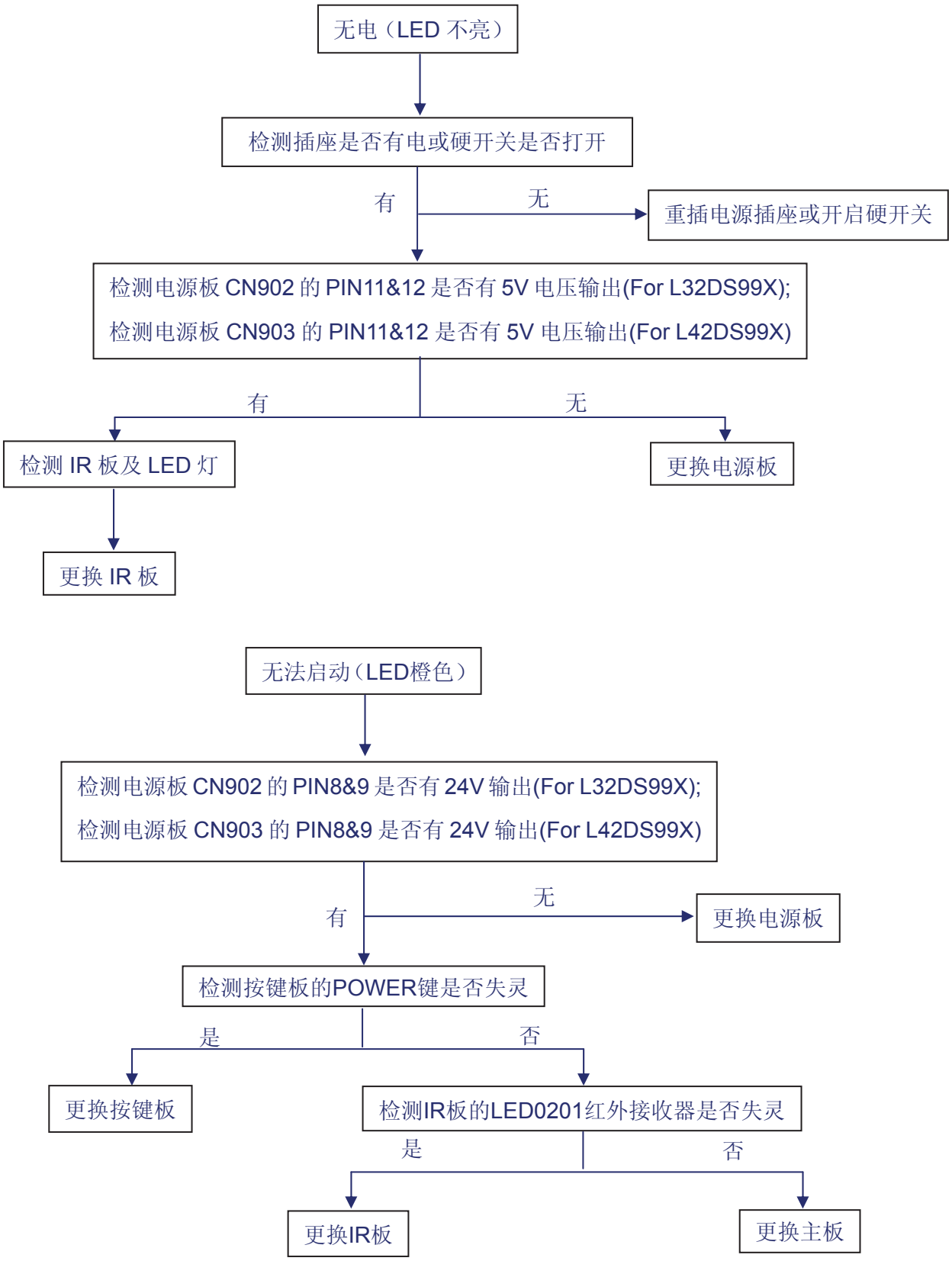

英华家电维修资料软件专用 购买QQ:505966338

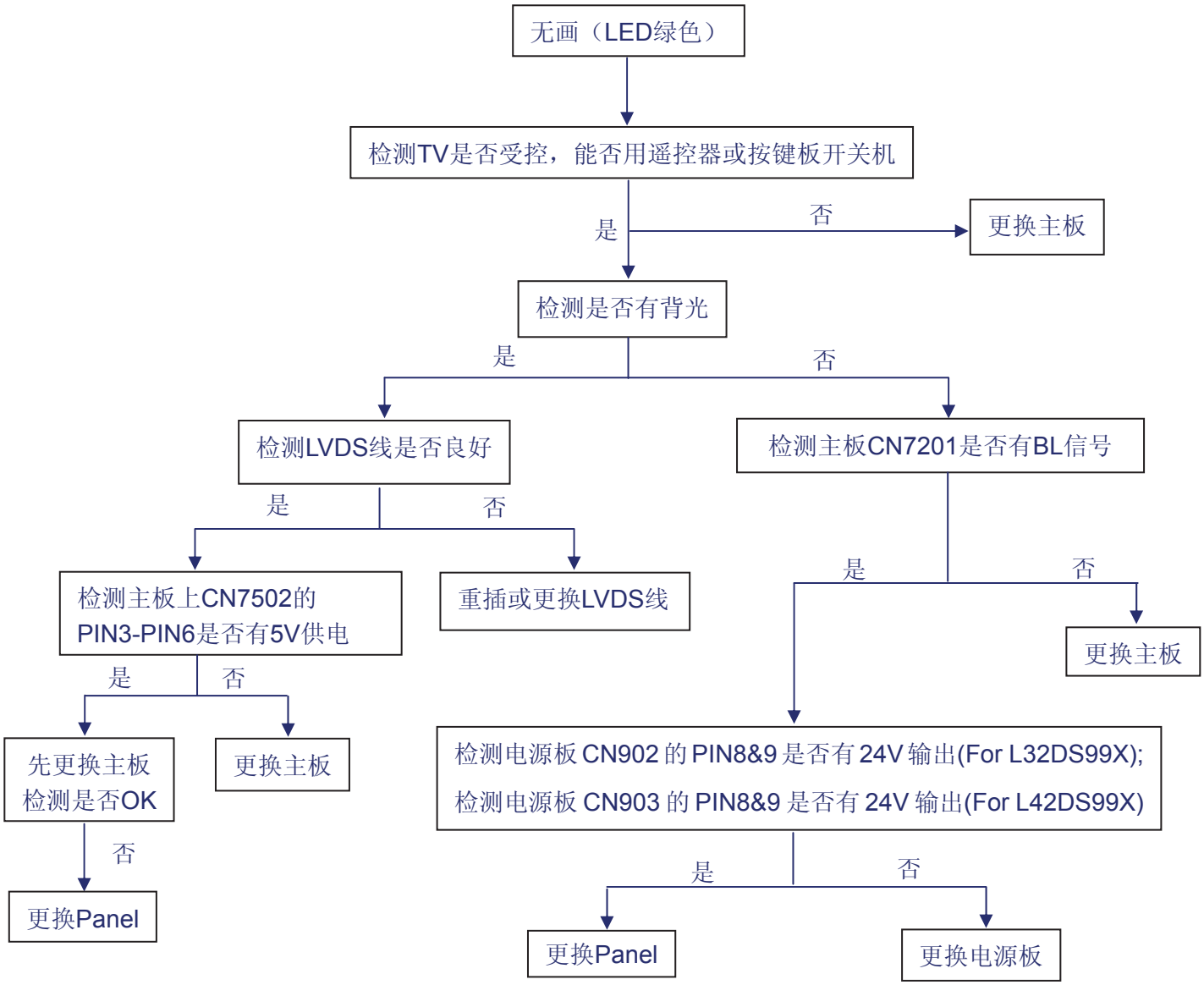

英华家电维修资料软件专用 购买QQ:505966338

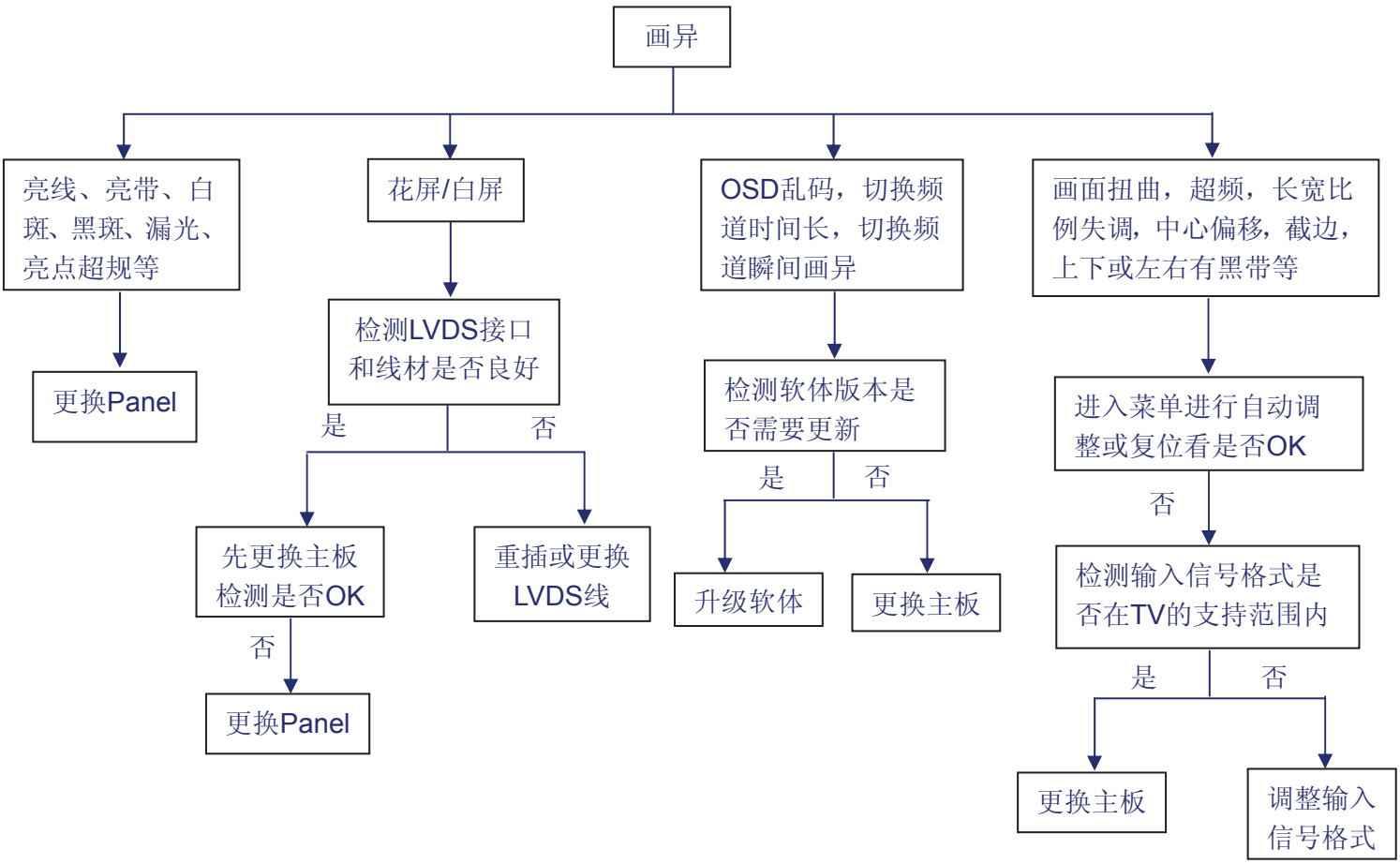

英华家电维修资料软件专用 购买QQ:505966338

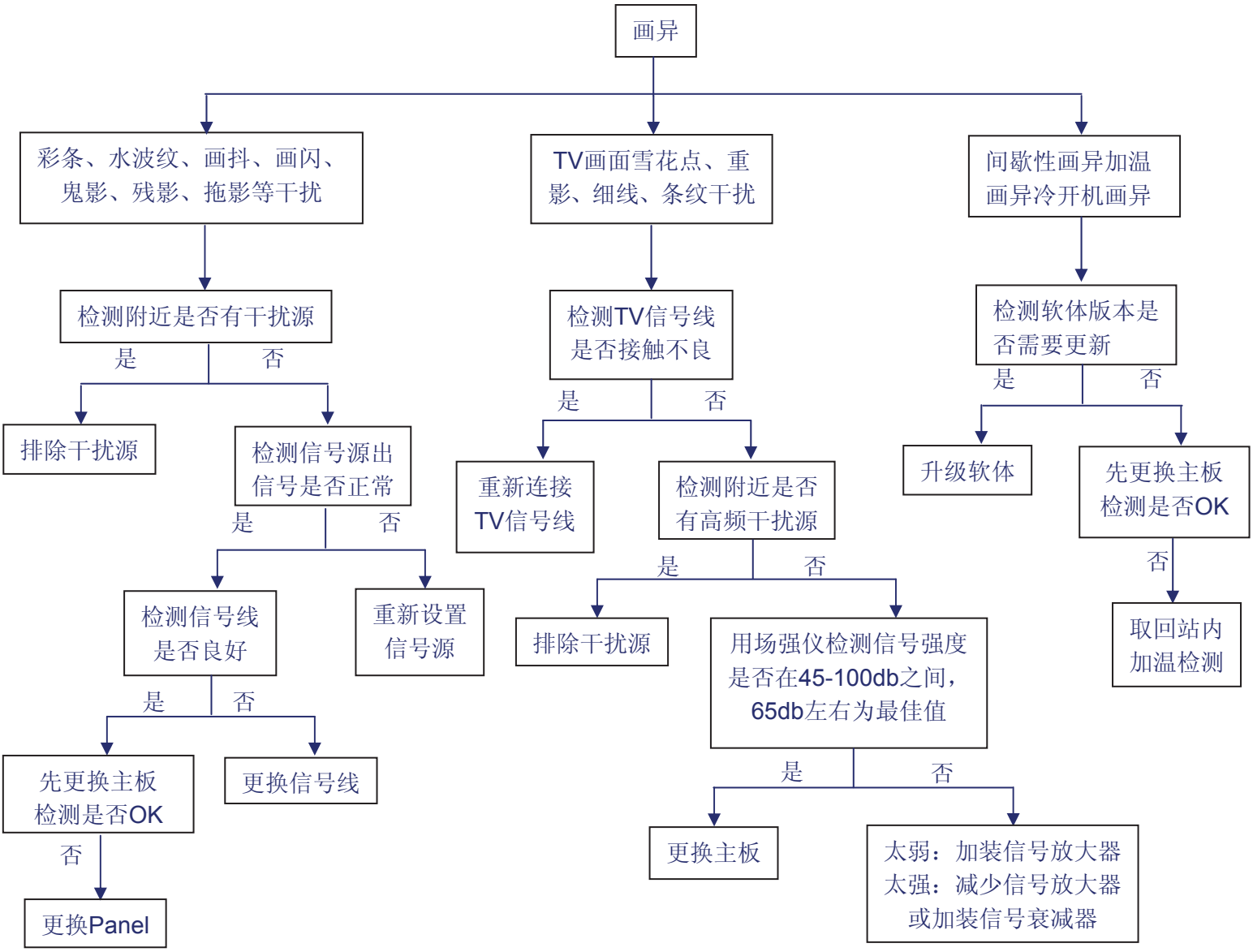

英华家电维修资料软件专用 购买QQ:505966338

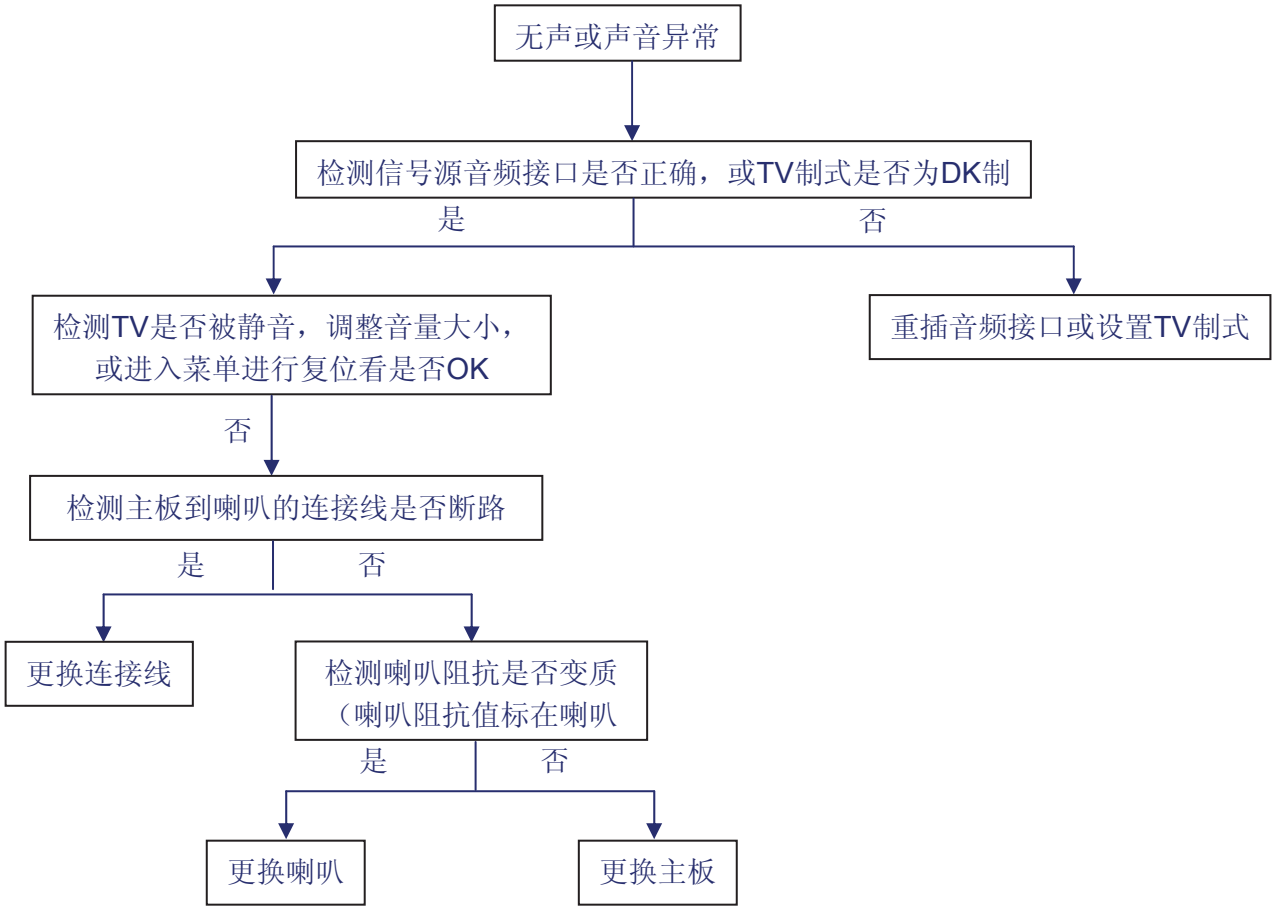

英华家电维修资料软件专用 购买QQ:505966338

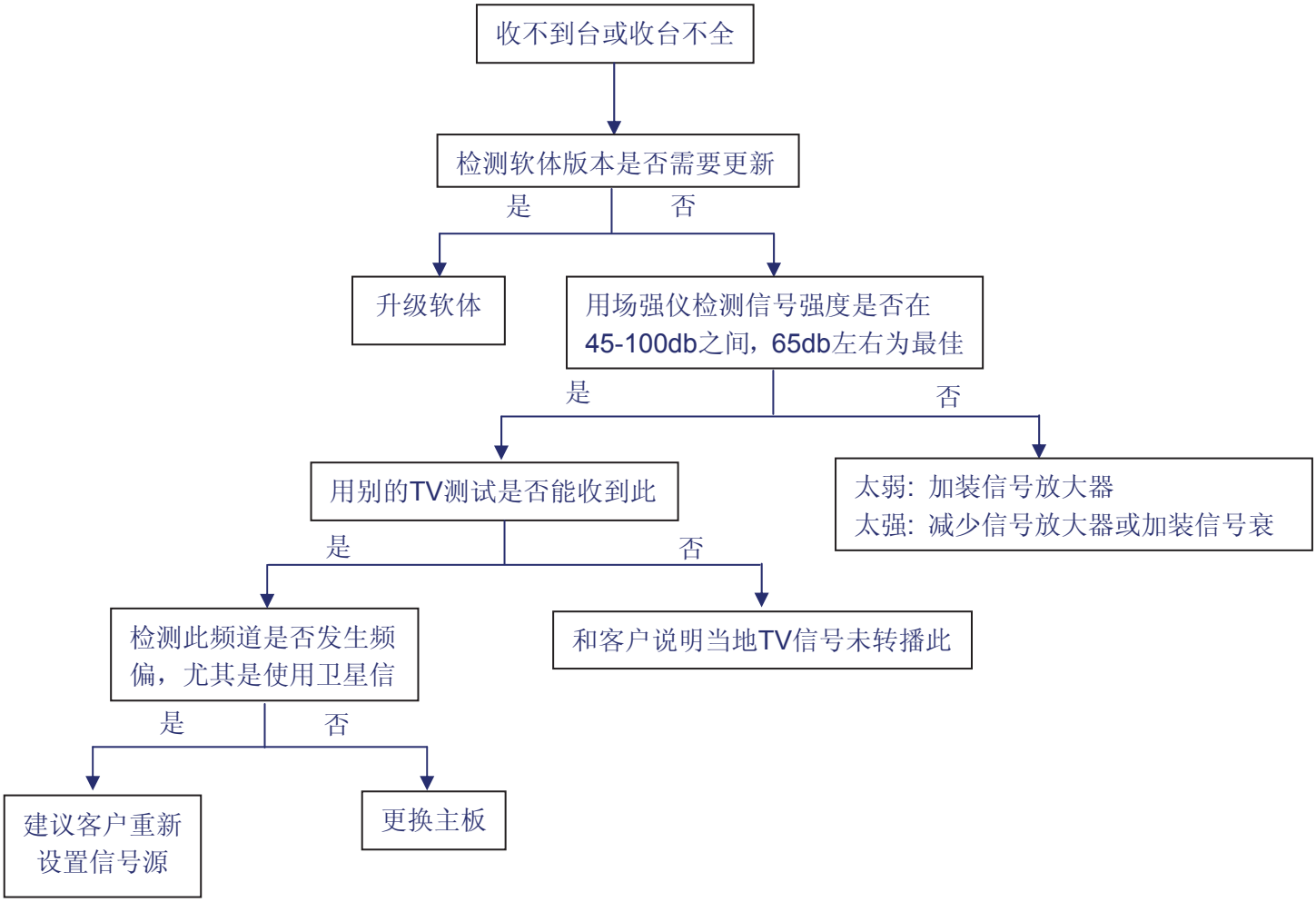

英华家电维修资料软件专用 购买QQ:505966338

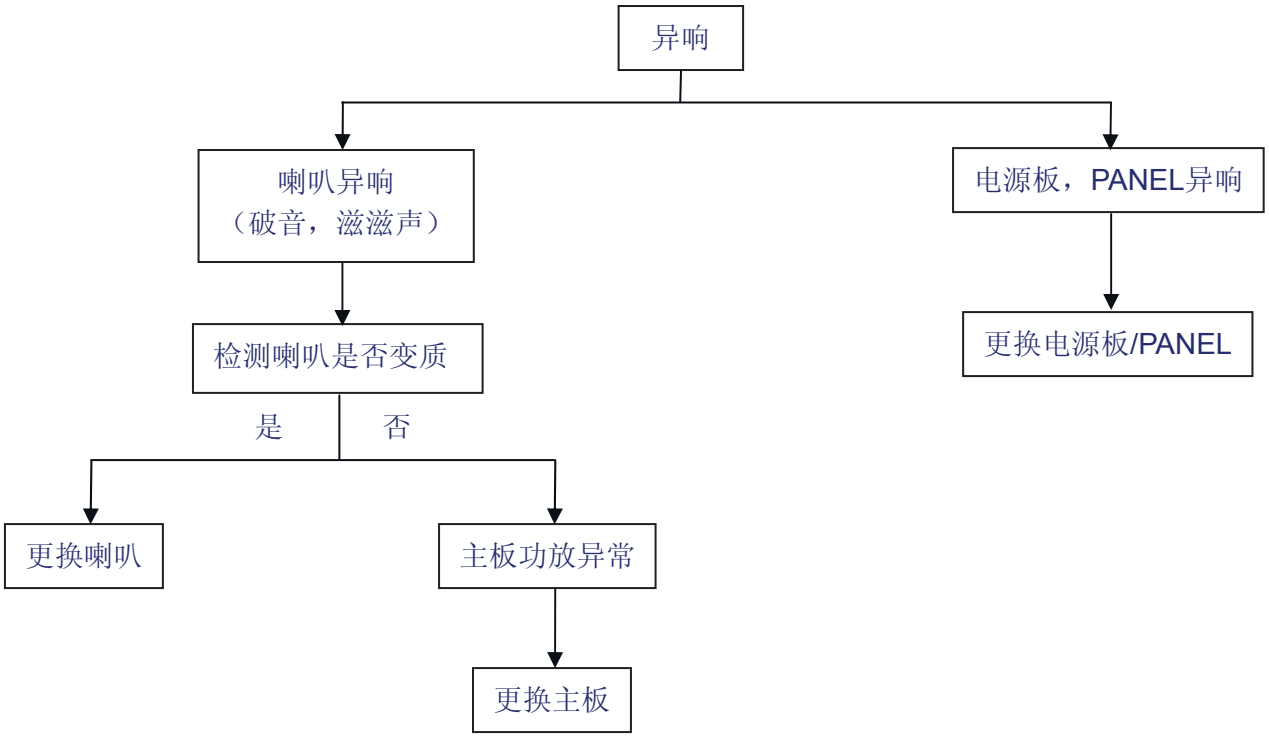

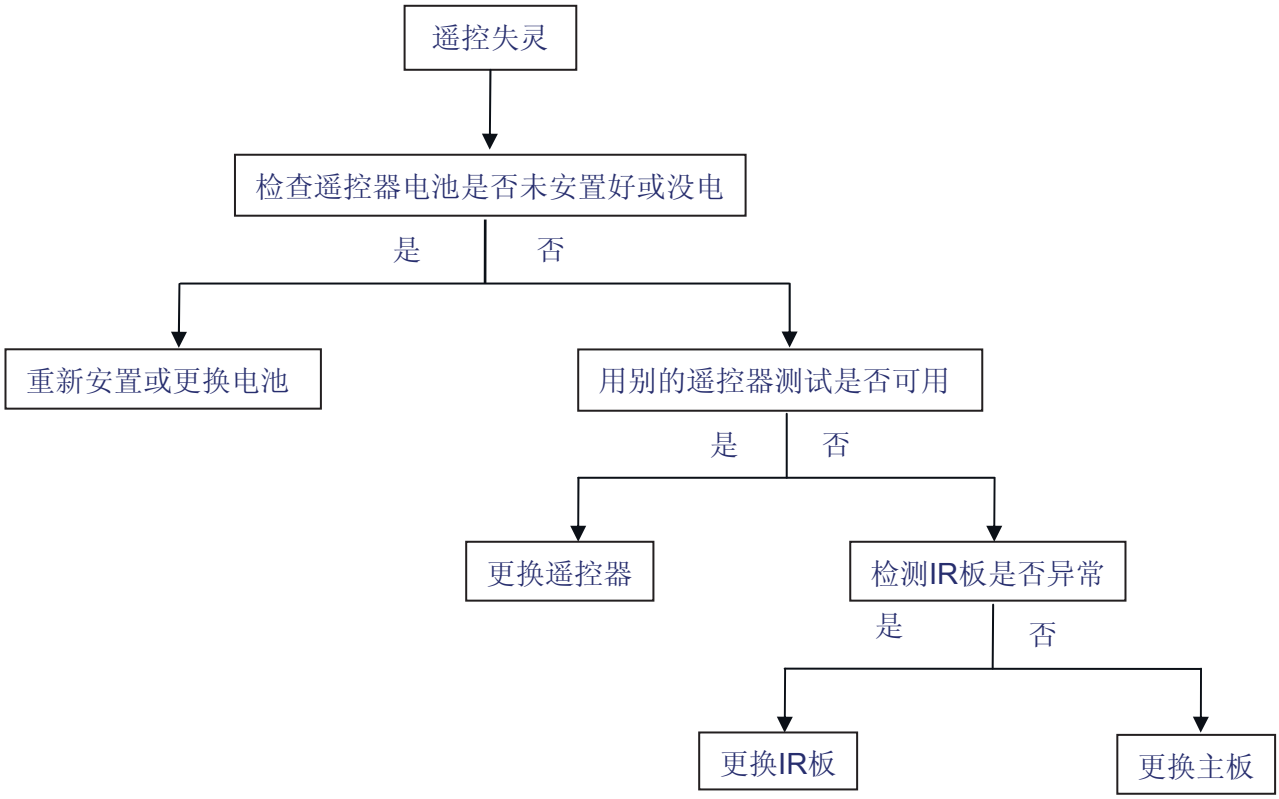

英华家电维修资料软件专用 购买QQ:505966338

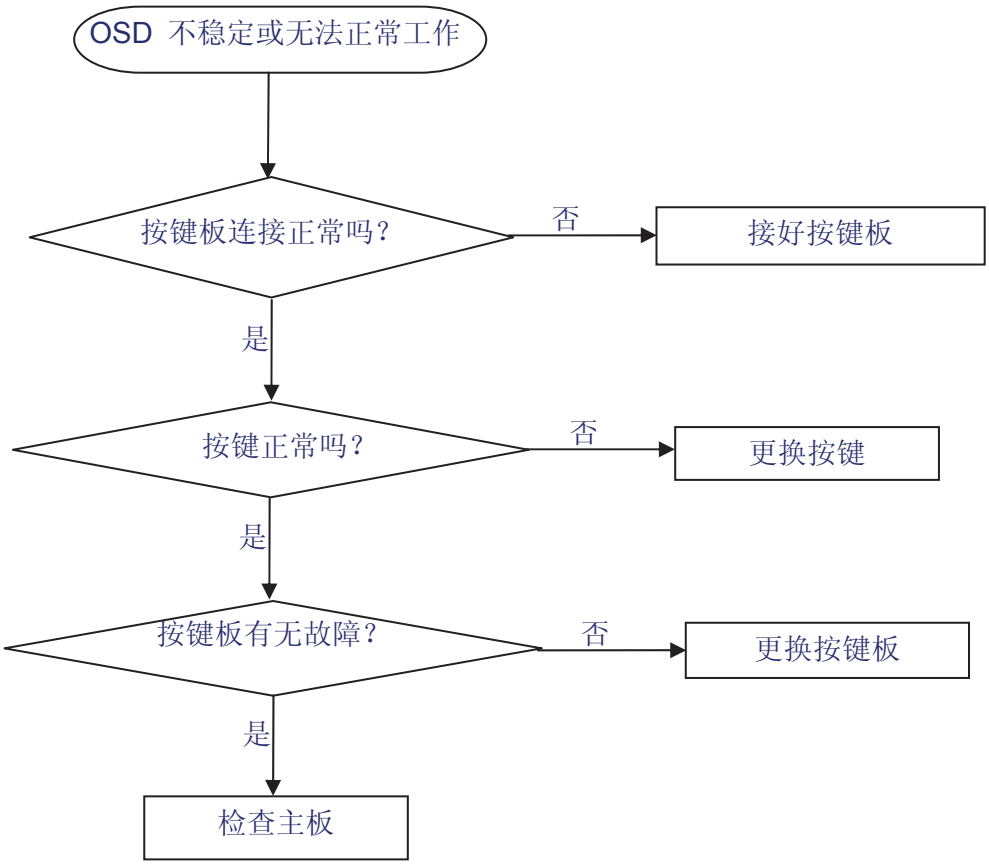

英华家电维修资料软件专用 购买QQ:505966338

5.电气方框图

5.1 主板功能框图

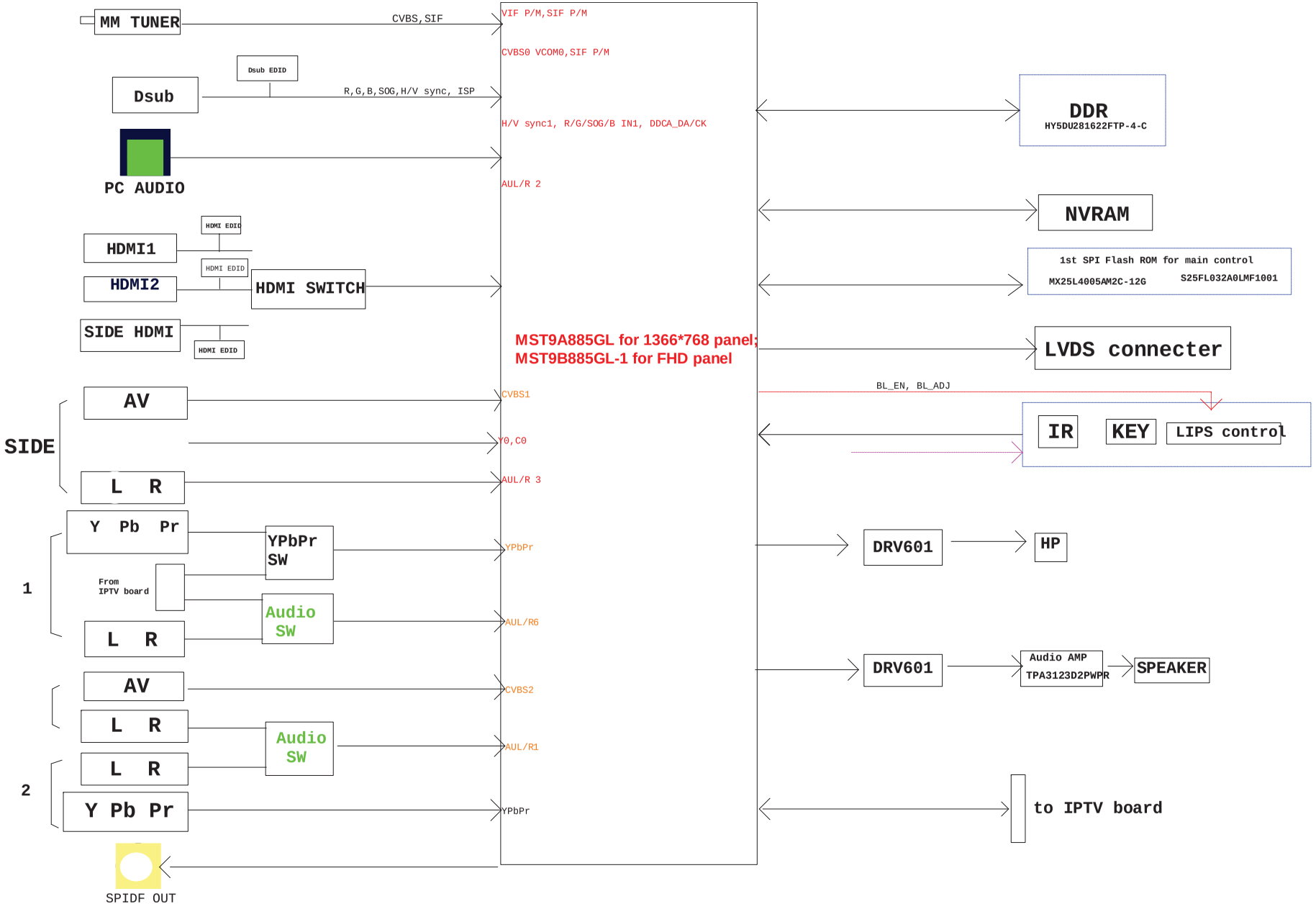

英华家电维修资料软件专用 购买QQ:505966338

5.2 主板电源框图

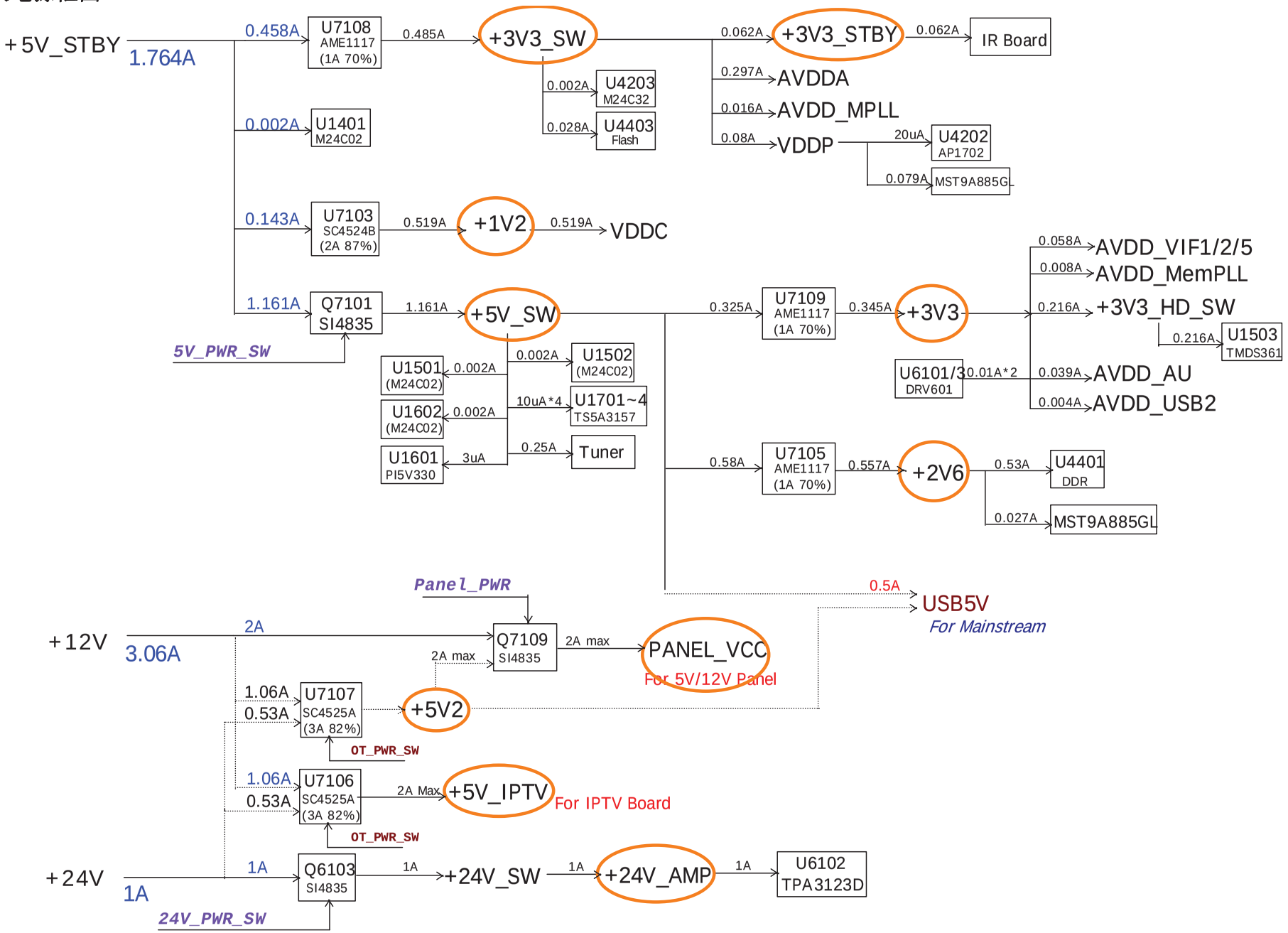

英华家电维修资料软件专用 购买QQ:505966338

6.线路图

6.1 主板 715G3422-2

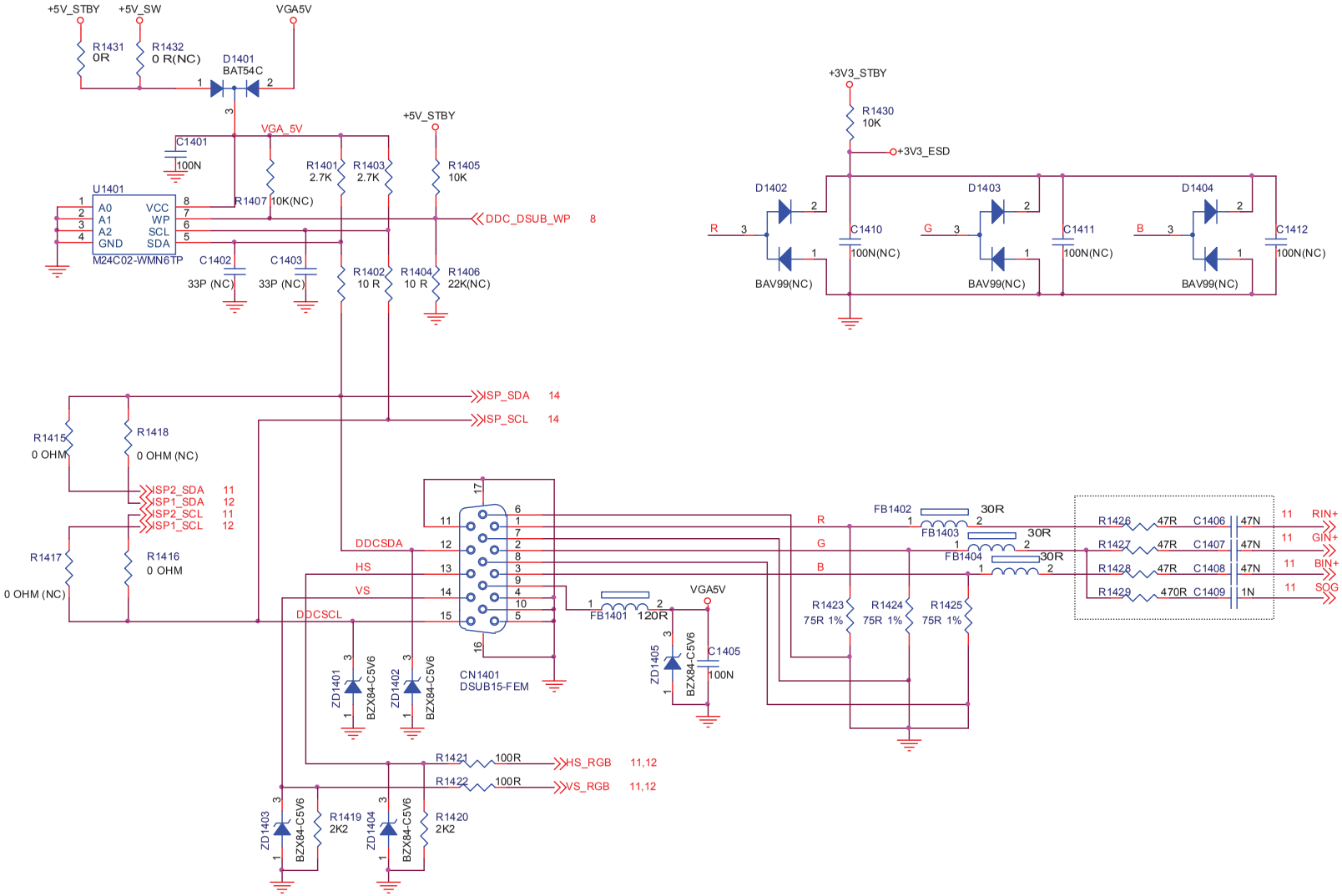

TPV (Top Victory Electronics Co., Ltd.)		OEM MODEL		Size	Custom
結隔瓜銀腹	T3422-1-X-X-3-20090506	TPV MODEL		Rev	1
Key Component	04. D-SUB INPUT	PCB NAME	715G3422	称爹	
Date	Wednesday, May 06, 2009	Sheet	4 of 21		

英华家电维修资料软件专用 购买QQ:505966338

CVBS OUT

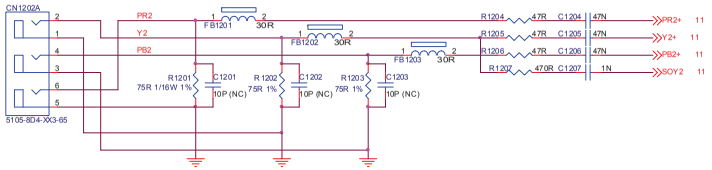

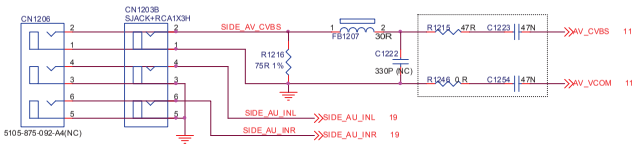

With S-Video : CN1203
Without S-Video : CN1206

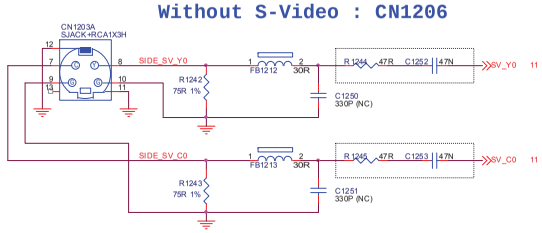

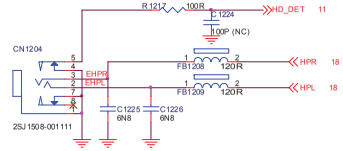

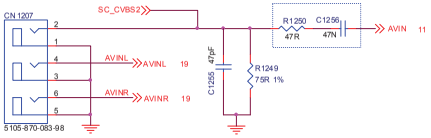

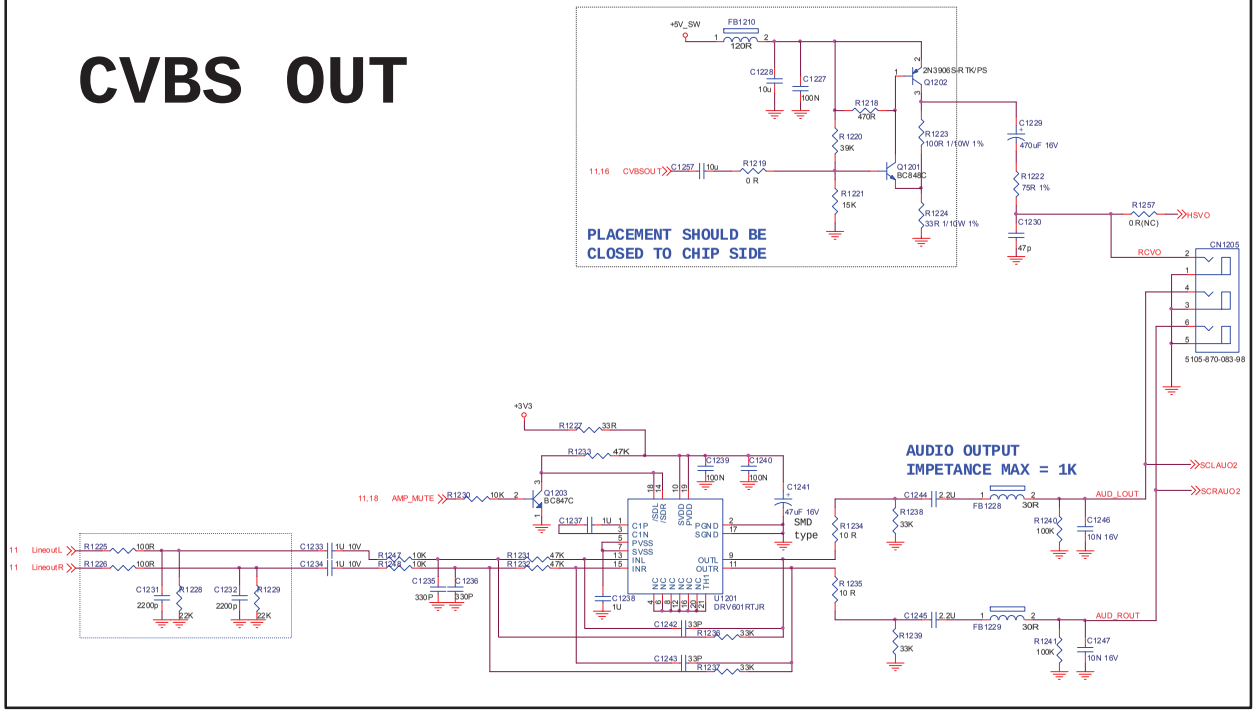

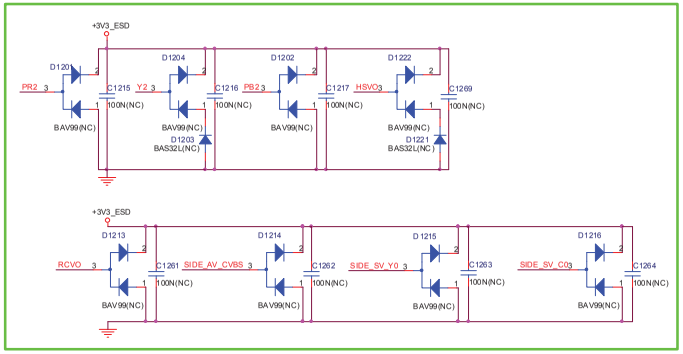

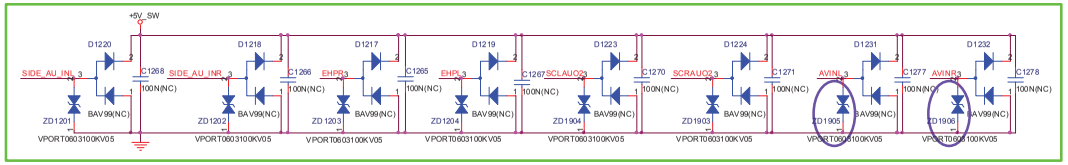

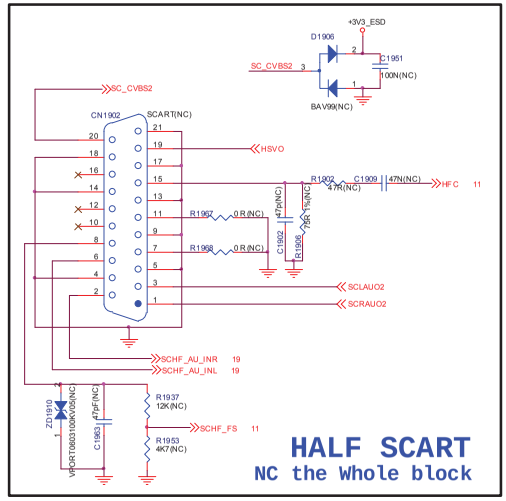

TPV (Top Victory Electronics Co., Ltd.)	OEM MODEL		Size: Custom
基隆瓦眉集	T3422-1-X-X-3-20090506	TPV MODEL	Rev: 1
Key Component	05. VIDEO INPUT AND CVBS OUTPUT	PCB NAME: 715G3422	标签
Date: Wednesday, May 06, 2009		Sheet: 5 of 21	

英华家电维修资料软件专用 购买QQ:505966338

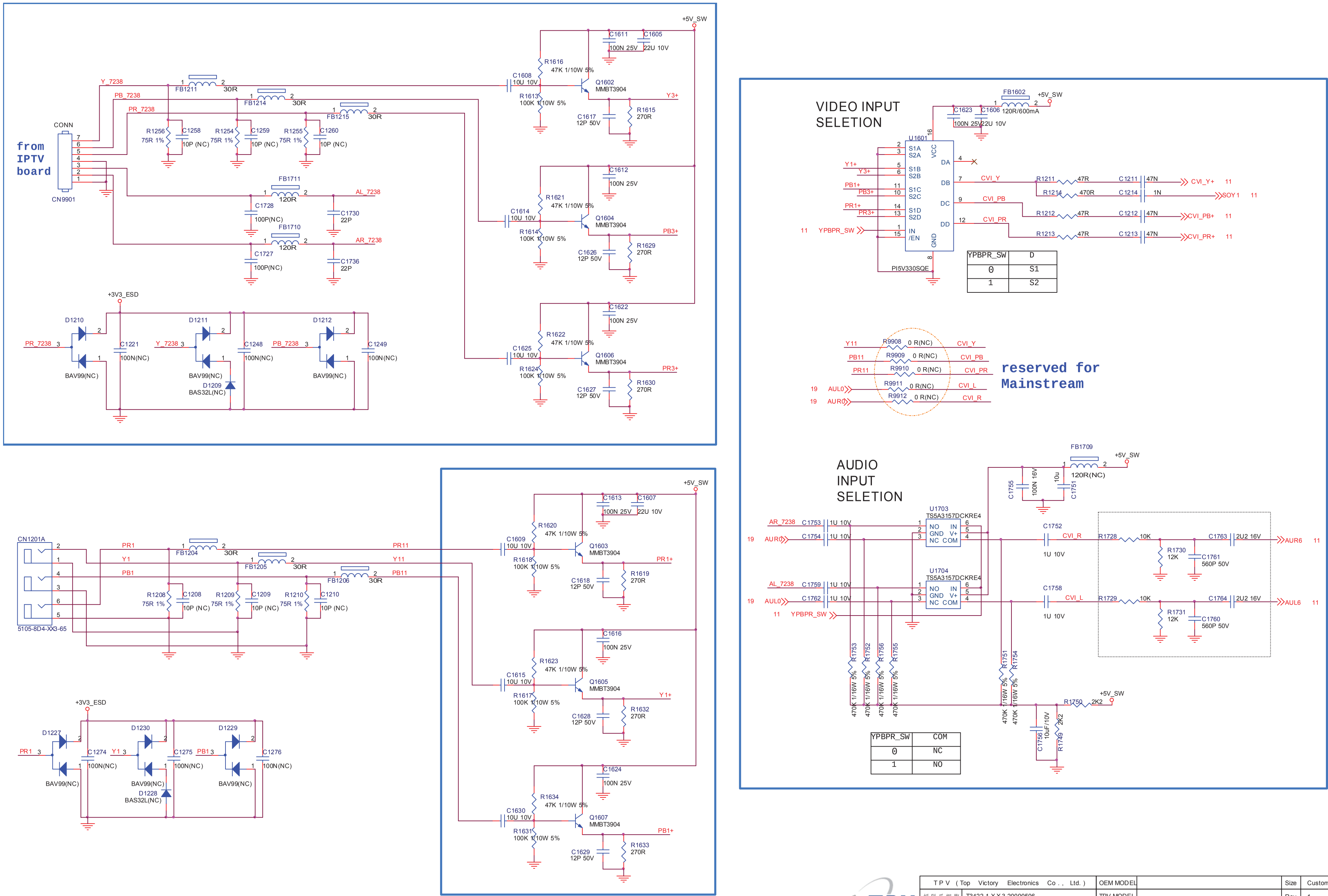

TPV (Top Victory Electronics Co., Ltd.)	OEM MODEL		Size	Custom
鋁 隔 瓜 鋼 腹 T3422-1-X-X-3-20090506	TPV MODEL		Rev	1
Key Component 06. IPTV / CVI Switch	PCB NAME	715G3422	稱爹	
Date Wednesday, May 06, 2009	Sheet	6 of 21		

英华家电维修资料软件专用 购买QQ:505966338

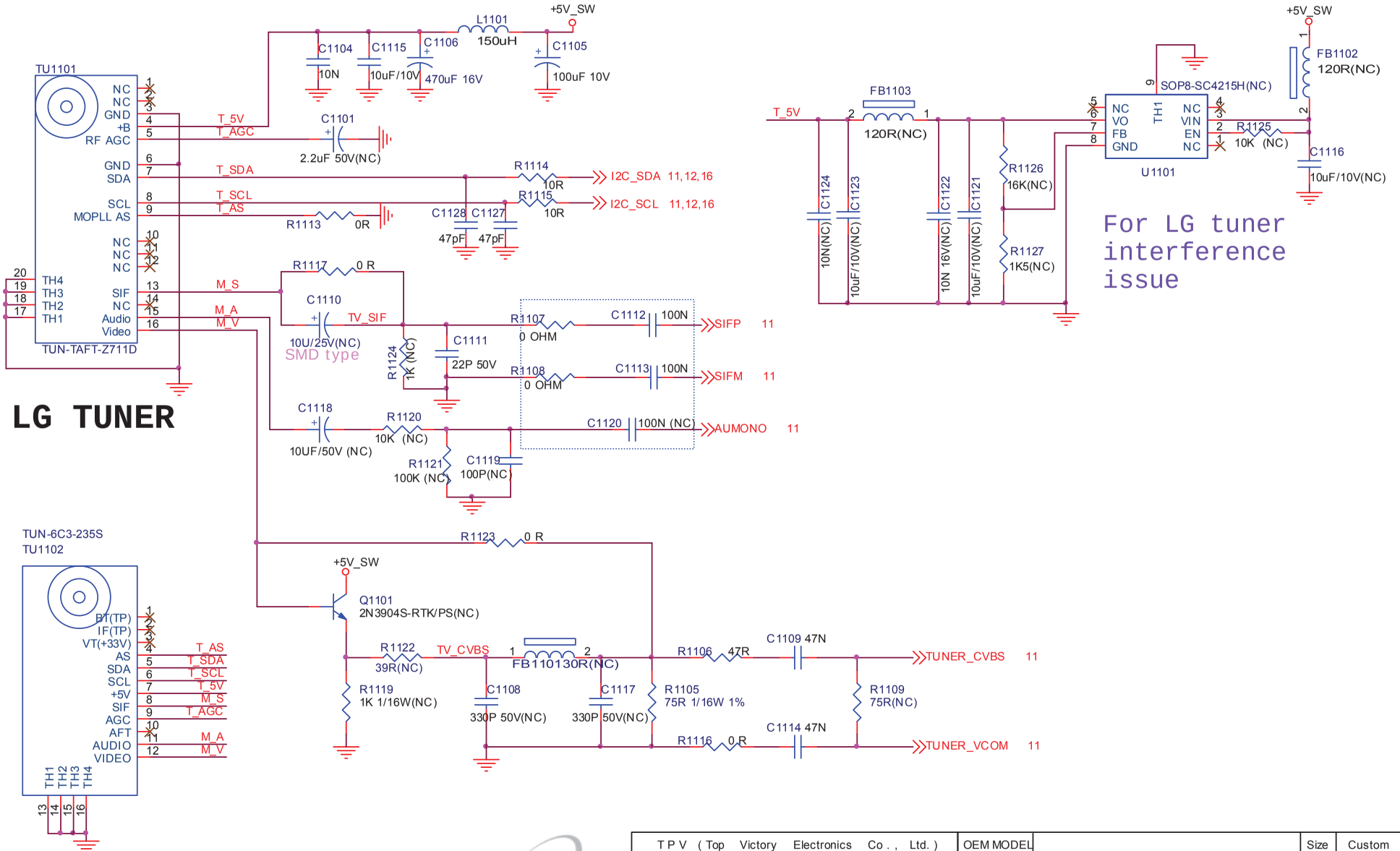

TPV (Top Victory Electronics Co., Ltd.)		OEM MODEL		Size	Custom
結隔瓜細腹	T3422-1-X-X-3-20090506	TPV MODEL		Rev	1
Key Component	07. TUNER	PCB NAME	715G3422	称爹	
Date	Wednesday, May 06, 2009	Sheet	7 of 21		

英华家电维修资料软件专用 购买QQ:505966338

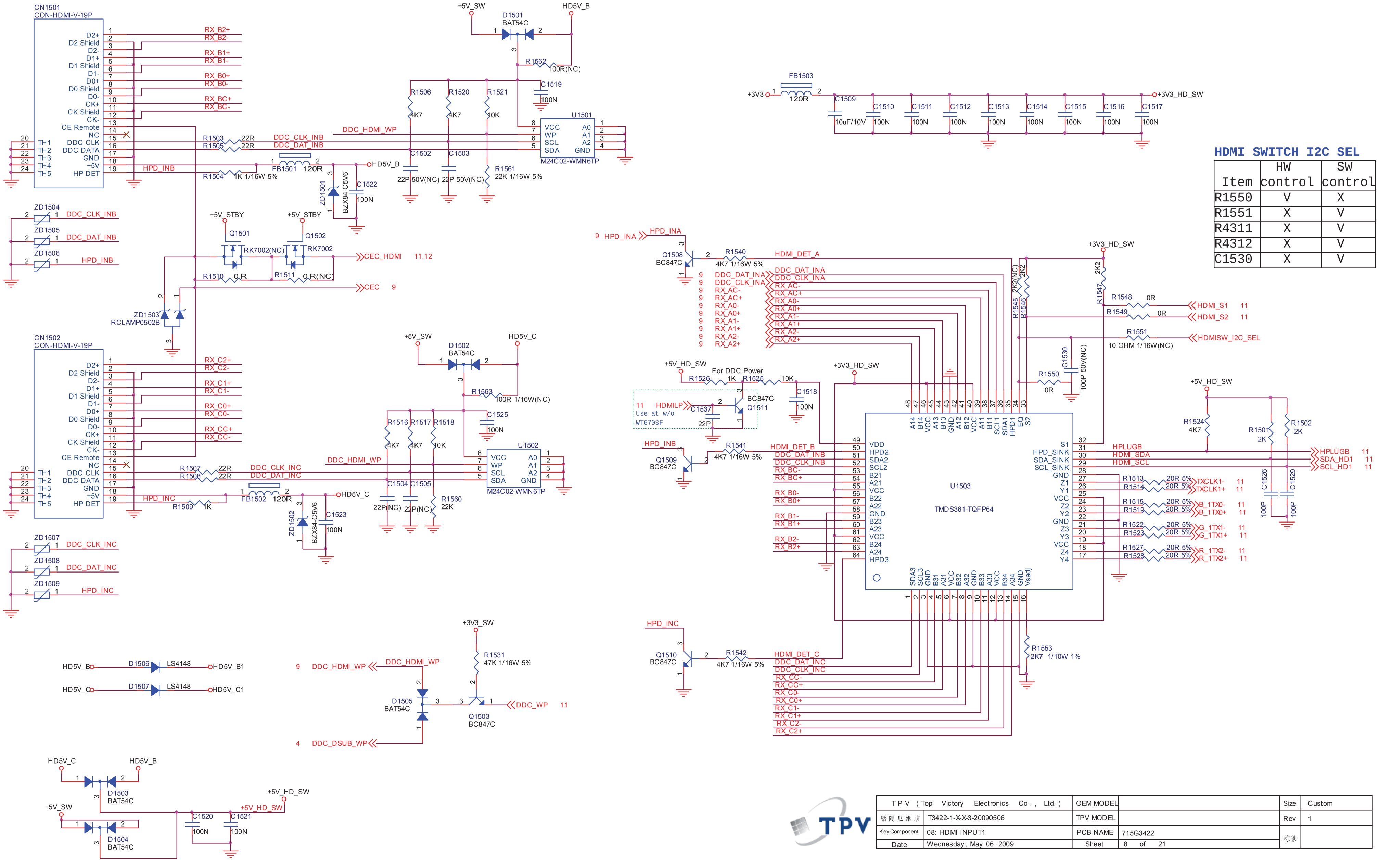

HDMI SWITCH I2C SEL

Item	HW control	SW control
R1550	V	X
R1551	X	V
R4311	X	V
R4312	X	V
C1530	X	V

T P V (Top Victory Electronics Co . , Ltd.)		OEM MODEL		Size	Custom
絬 隔 瓜 網 腹	T3422-1-X-X-3-20090506	TPV MODEL		Rev	1
Key Component	08: HDMI INPUT1	PCB NAME	715G3422	称爹	
Date	Wednesday , May 06, 2009	Sheet	8 of 21		

英华家电维修资料软件专用 购买QQ:505966338

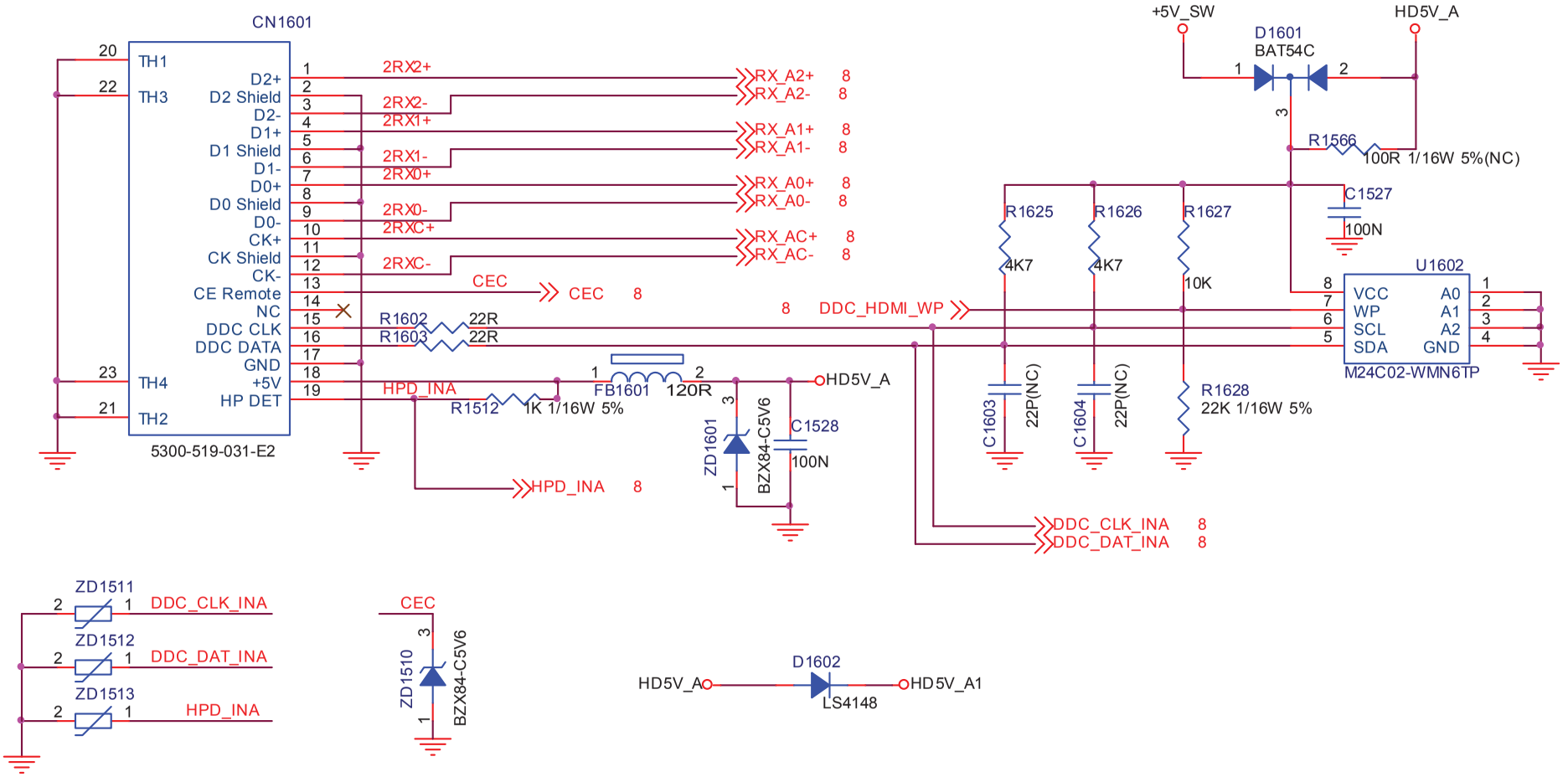

TPV (Top Victory Electronics Co., Ltd.)		OEM MODEL		Size	Custom
結構代號	T3422-1-X-X-3-20090506	TPV MODEL		Rev	1
Key Component	09. HDMI INPUT 2	PCB NAME	715G3422	称爹	
Date	Wednesday, May 06, 2009	Sheet	9 of 21		

英华家电维修资料软件专用 购买QQ:505966338

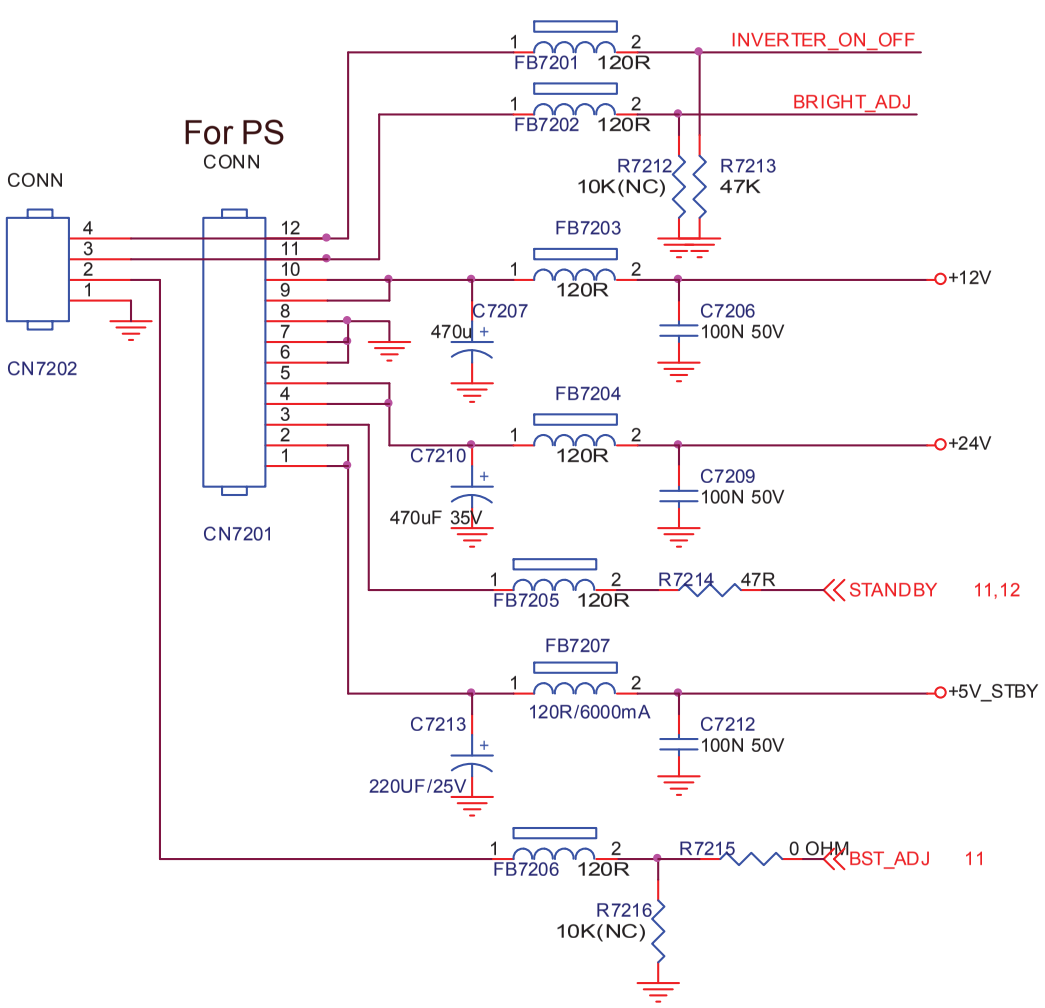

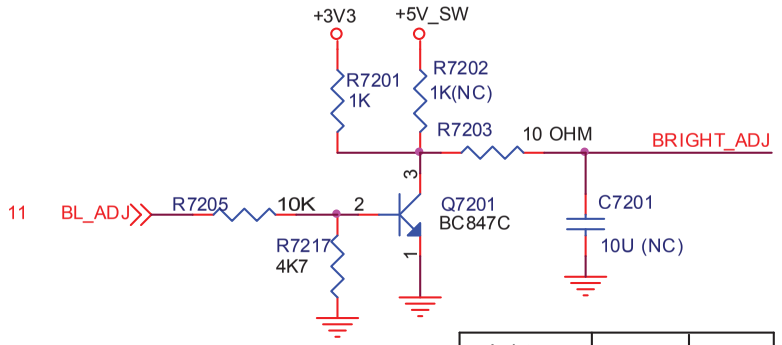

Bright_ADJ	R7203	C7201
PWM	10R	NC
DC	5K6	10Uf

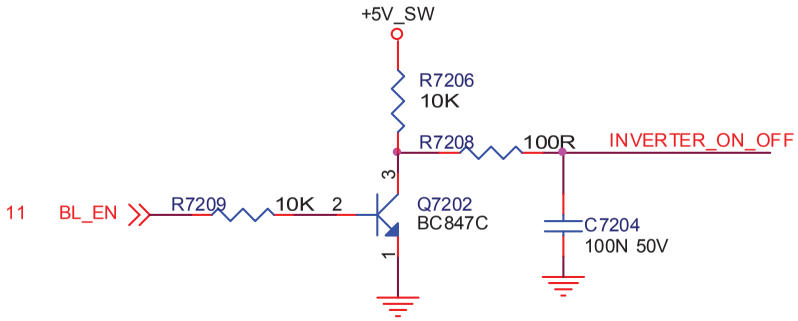

T P V (Top Victory Electronics Co . , Ltd.)		OEM MODEL		Size	Custom
結 隔 瓜 綢 腹	T3422-1-X-X-3-20090506	TPV MODEL		Rev	1
Key Component	10: Power & INVERTER I/F	PCB NAME	715G3422	称爹	
Date	Thursday, August 20, 2009	Sheet	10 of 21		

英华家电维修资料软件专用 购买QQ:505966338

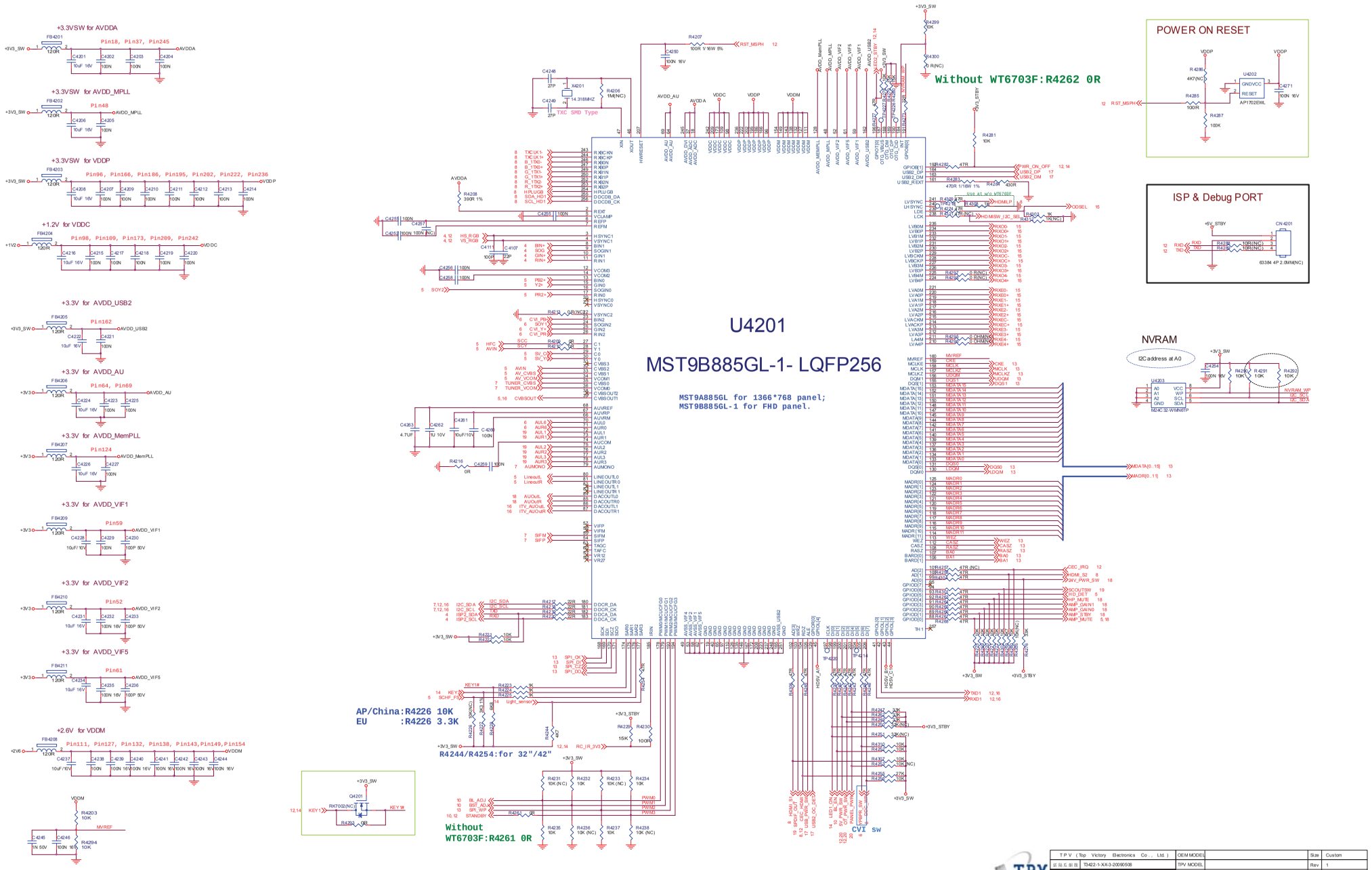

英华家电维修资料软件专用 购买QQ:505966338

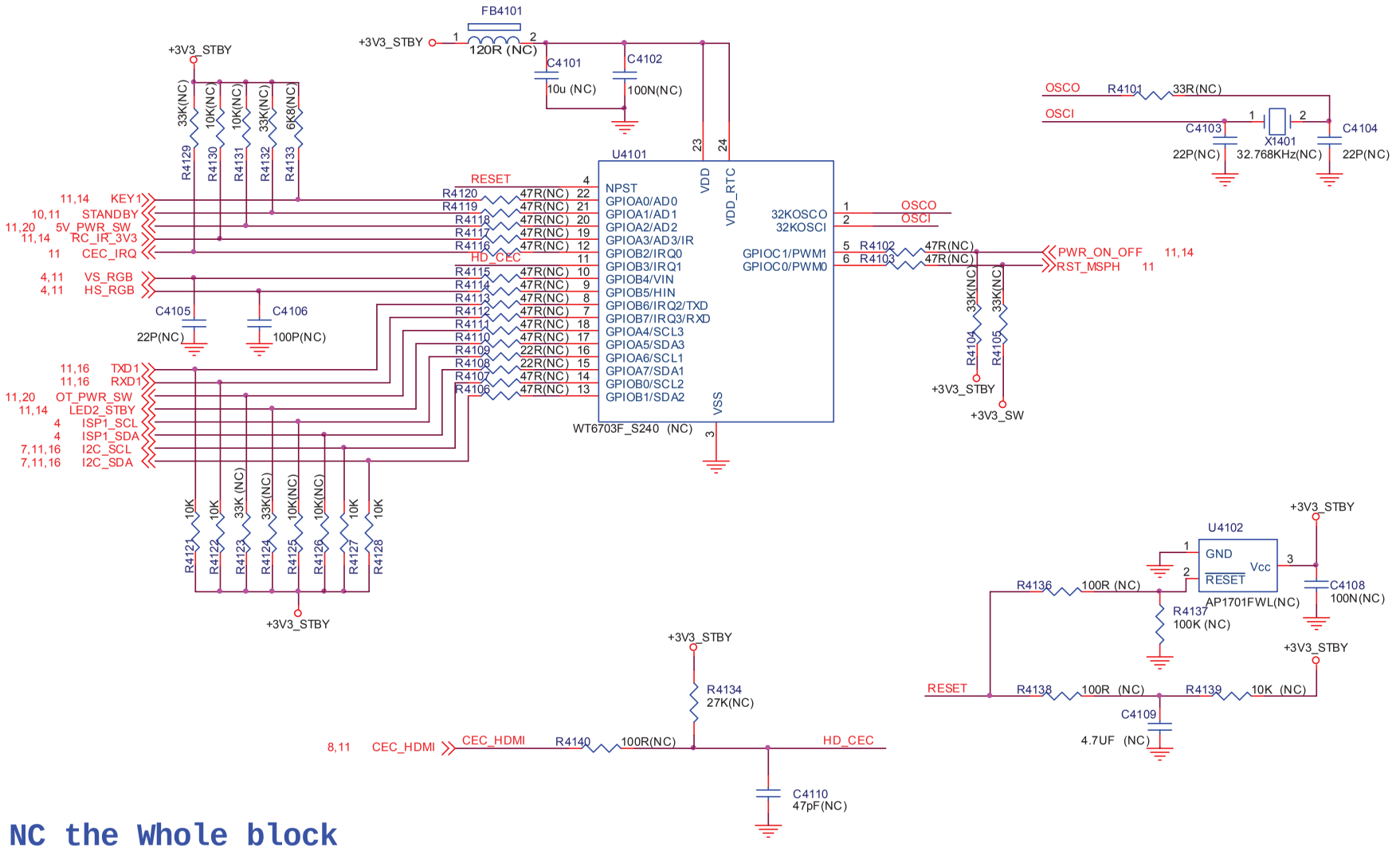

NC the Whole block

TPV (Top Victory Electronics Co., Ltd.)		OEM MODEL		Size	Custom
結隔瓜細腹	T3422-1-X-X-3-20090506	TPV MODEL		Rev	1
Key Component	12: WT6703F (STANDBY MCU)	PCB NAME	715G3422	称爹	
Date	Wednesday, May 06, 2009	Sheet	12 of 21		

英华家电维修资料软件专用 购买QQ:505966338

Add By Jack to reduce ripple voltage

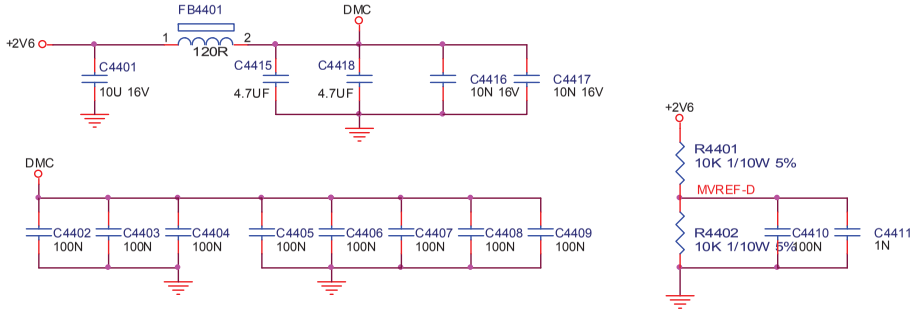

1st SPI Flash ROM for Main Control

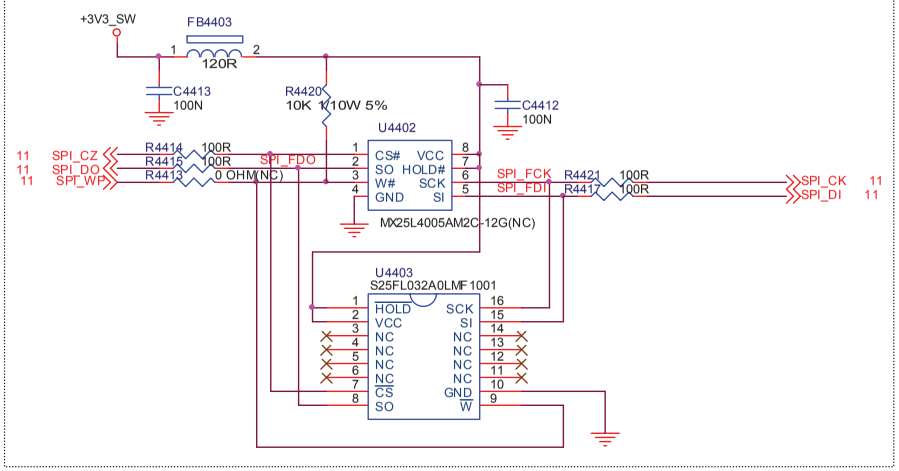

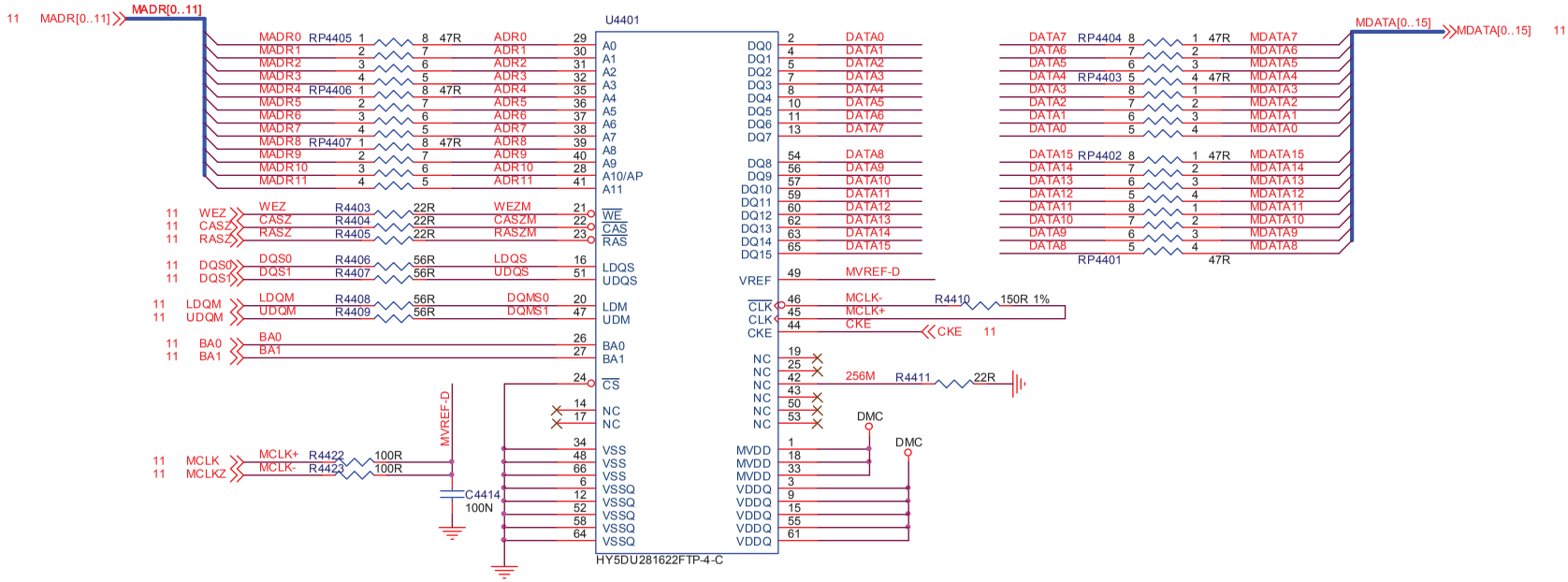

DDR 2M x 16bit x 4BK

U4401: HY5DU281622FTP-5-C for 26"/32"
HY5DU281622FTP-4-C for 42"

TPV (Top Victory Electronics Co., Ltd.)		OEM MODEL		Size	Custom
結構瓜編腹	T3422-1-X-X-3-20090506	TPV MODEL		Rev	1
Key Component	13: FLASH ROM and MEMORY	PCB NAME	715G3422	称爹	
Date	Wednesday, May 06, 2009	Sheet	13 of 21		

英华家电维修资料软件专用 购买QQ:505966338

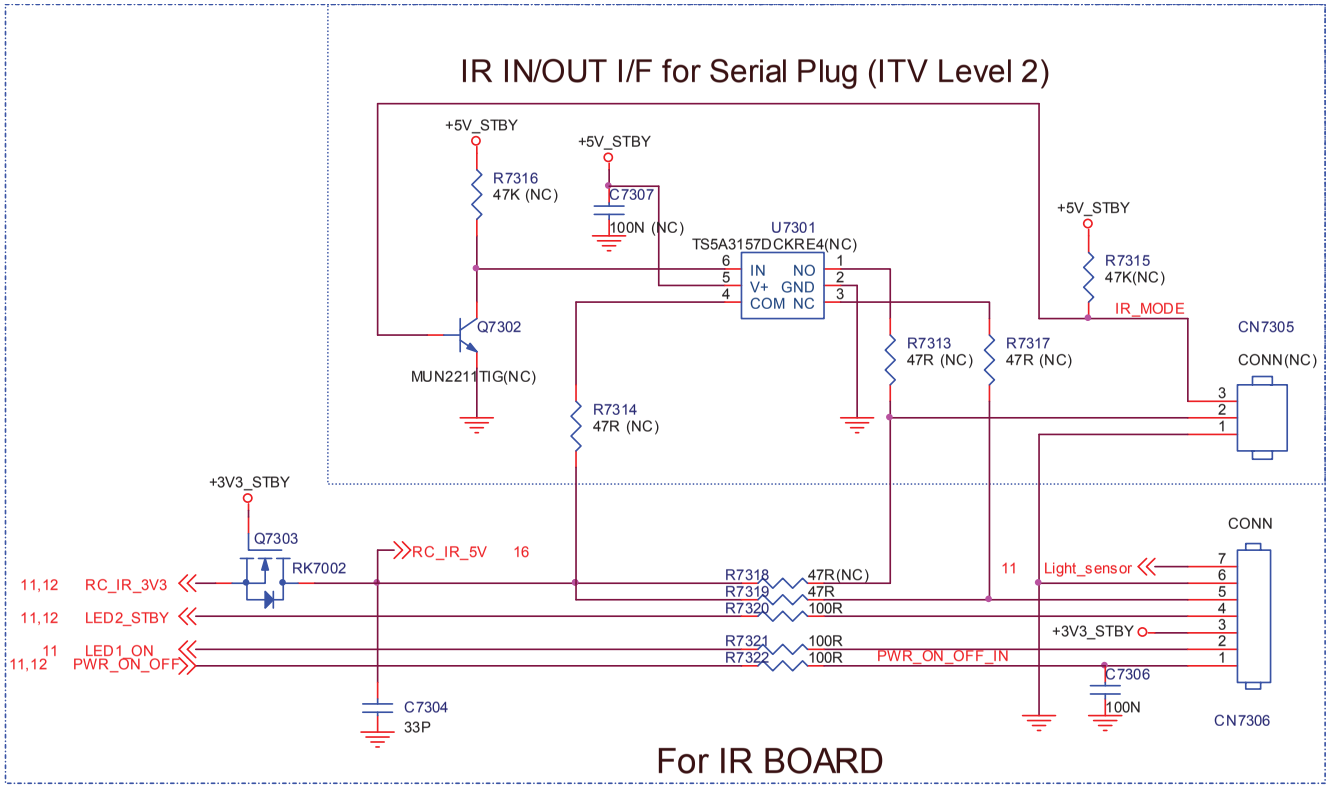

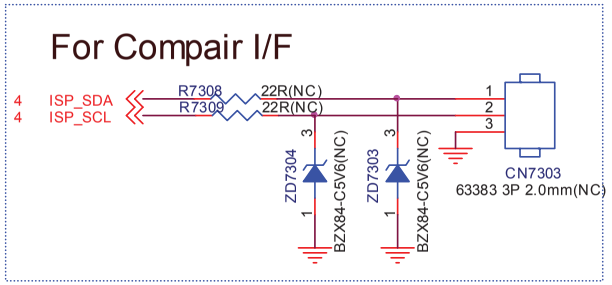

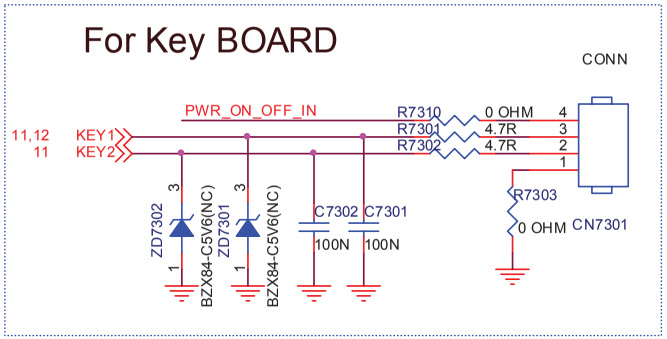

TPV (Top Victory Electronics Co., Ltd.)		OEM MODEL		Size	Custom
結構組織	T3422-1-X-X-3-20090506	TPV MODEL		Rev	1
Key Component	14: KEY, IR BD, & Compair I/F	PCB NAME	715G3422	称爹	
Date	Wednesday, May 06, 2009	Sheet	14 of 21		

英华家电维修资料软件专用 购买QQ:505966338

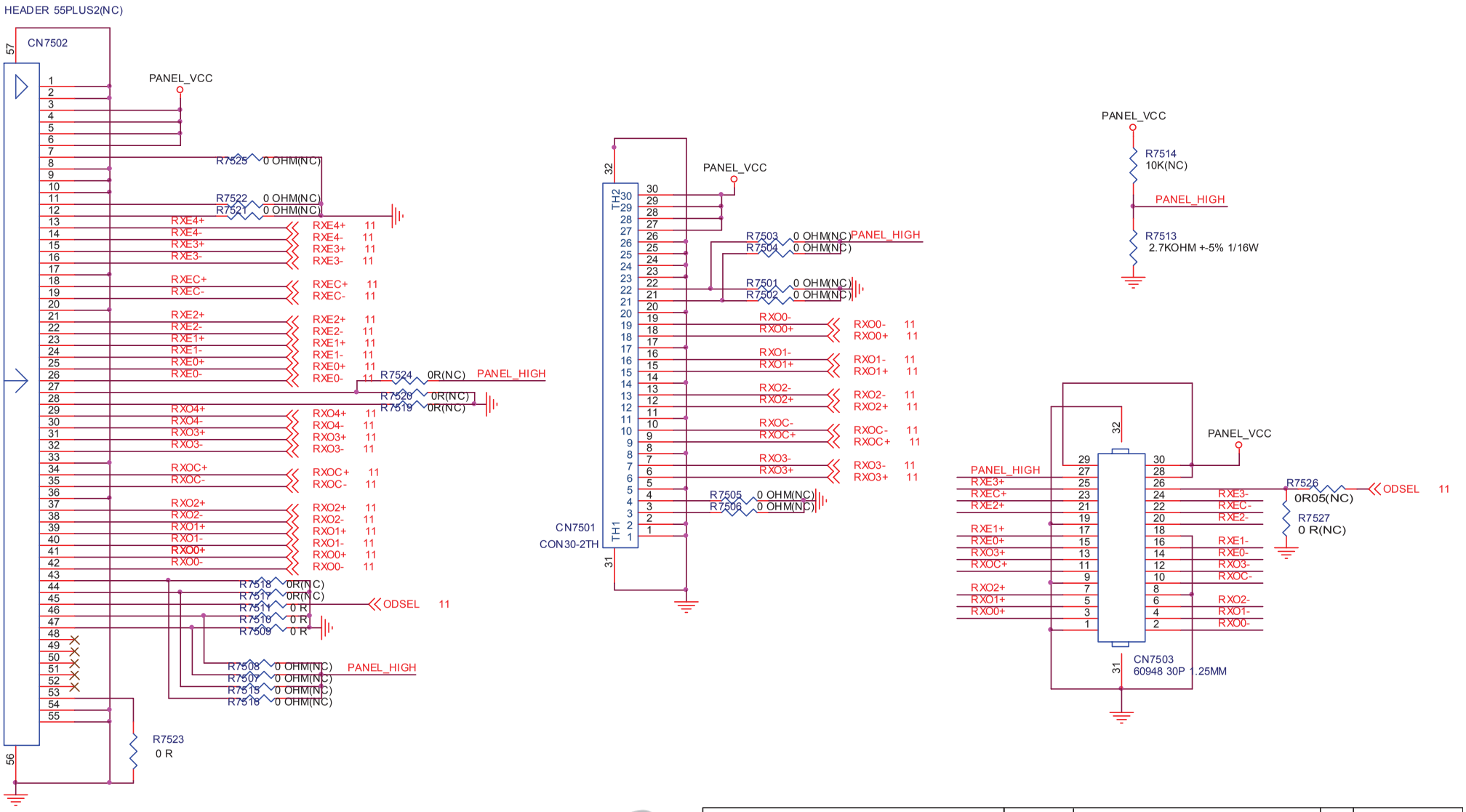

TPV (Top Victory Electronics Co., Ltd.)		OEM MODEL		Size	Custom
結隔瓜細腹	T3422-1-X-X-3-20090506	TPV MODEL		Rev	1
Key Component	15: PANEL I/F	PCB NAME	715G3422	称爹	
Date	Wednesday, May 06, 2009	Sheet	15 of 21		

英华家电维修资料软件专用 购买QQ:505966338

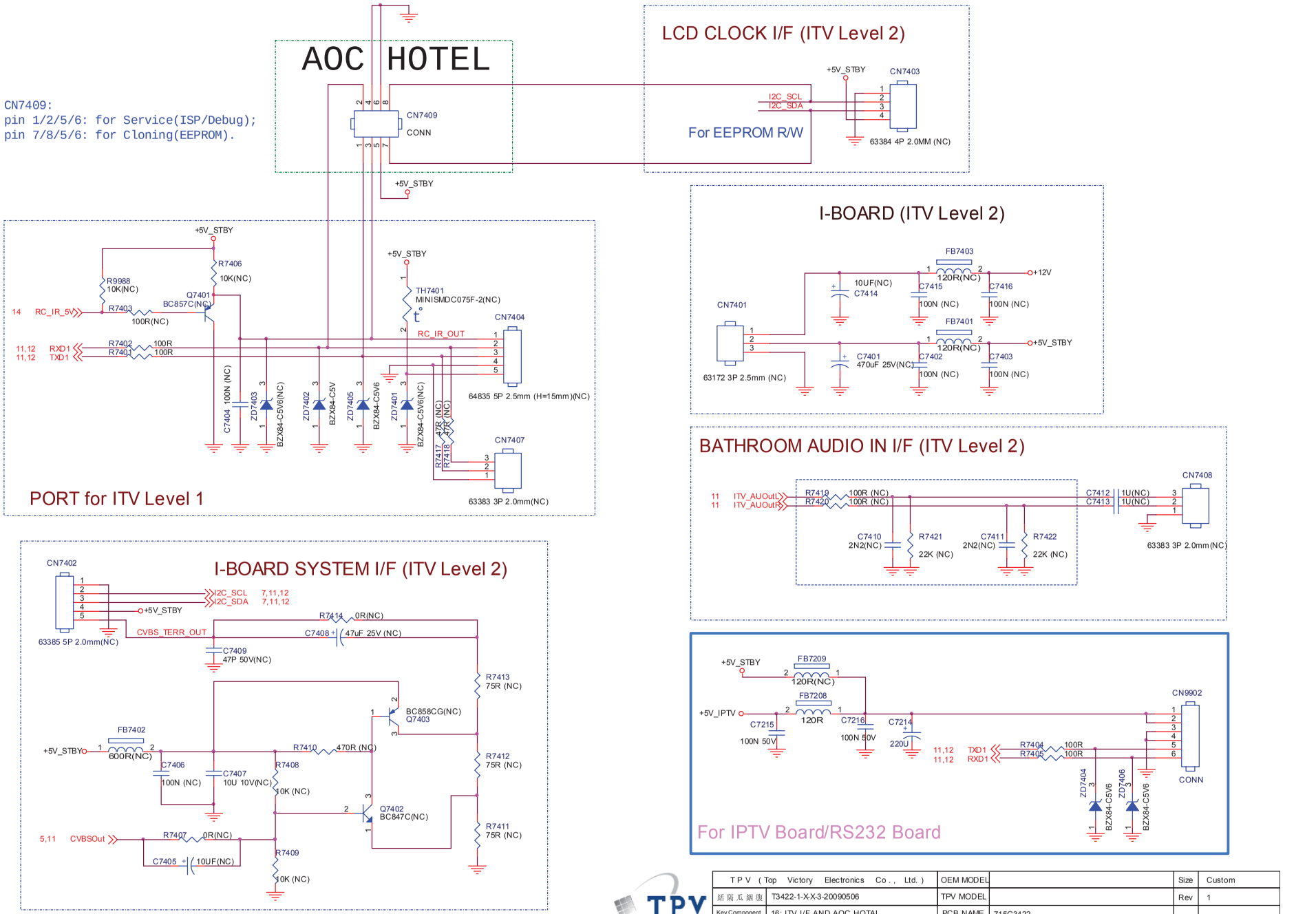

TPV (Top Victory Electronics Co., Ltd.)		OEM MODEL		Size	Custom
結隔瓜錮腹	T3422-1-X-X-3-20090506	TPV MODEL		Rev	1
Key Component	16: ITV I/F AND AOC HOTAL	PCB NAME	715G3422	称爹	
Date	Wednesday, May 06, 2009	Sheet	16 of 21		

英华家电维修资料软件专用 购买QQ:505966338

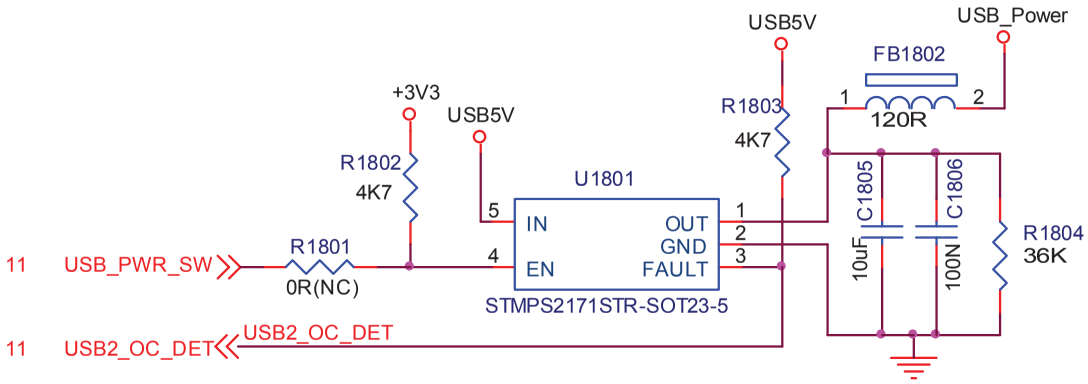

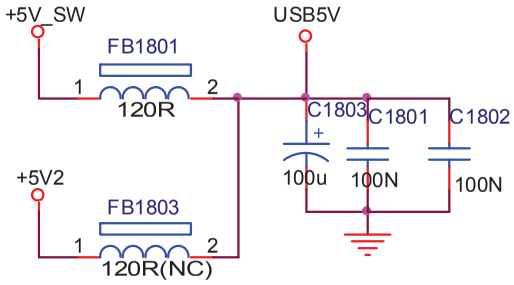

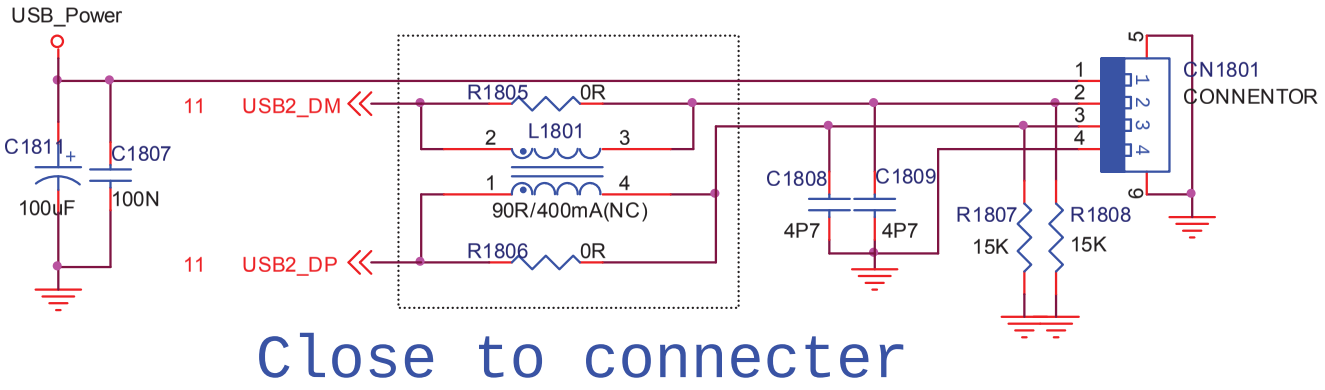

Close to connecter

T P V （Top Victory Electronics Co . , Ltd. ）		OEM MODEL		Size	Custom
結 隔 瓜 綑 腹	T3422-1-X-X-3-20090506	TPV MODEL		Rev	1
Key Component	17: USB	PCB NAME	715G3422	称 爹	
Date	Wednesday , May 06, 2009	Sheet	17 of 21		

英华家电维修资料软件专用 购买QQ:505966338

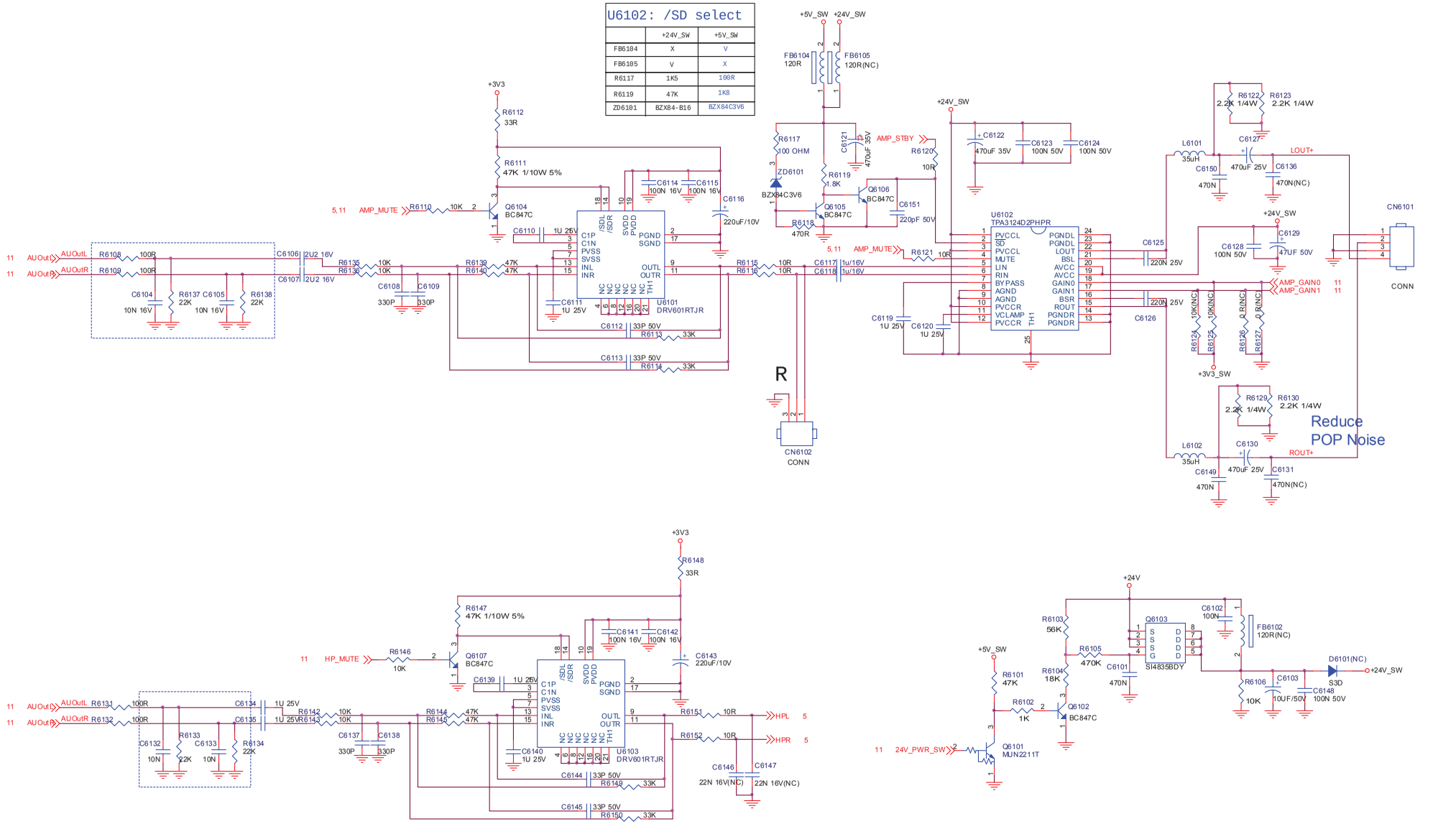

TPV (Top Victory Electronics Co., Ltd.)		OEM MODEL		Size	Custom
结 隔 瓜 细 腹	T3422-1-X-X-3-20090506	TPV MODEL		Rev	1
Key Component	18: AUDIO/AMP	PCB NAME	715G3422	称 爹	
Date	Wednesday, May 06, 2009	Sheet	18 of 21		

英华家电维修资料软件专用 购买QQ:505966338

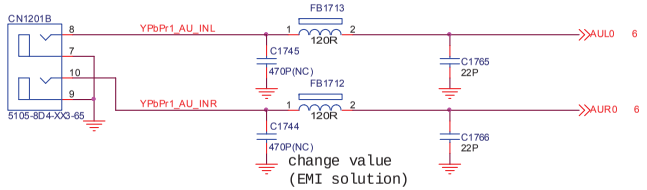

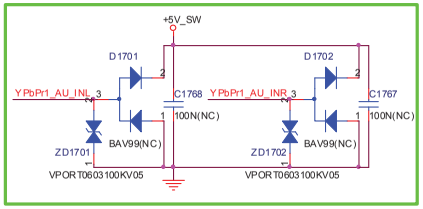

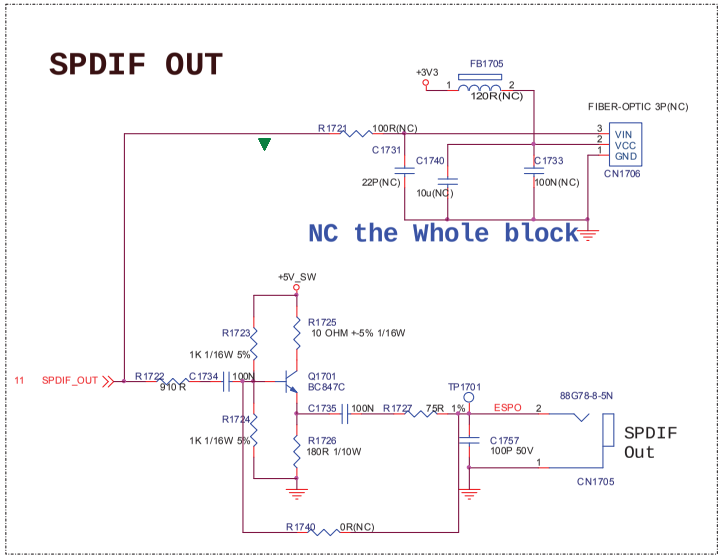

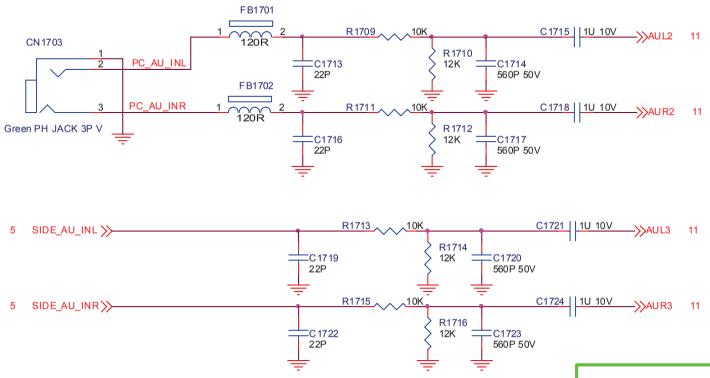

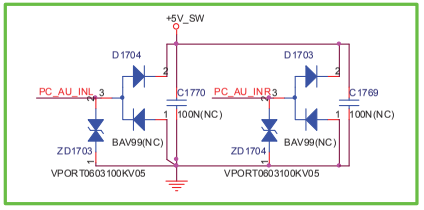

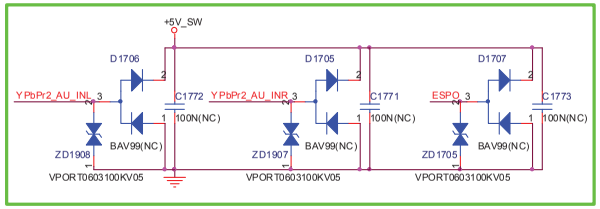

AP/China: C1725 NC ,C1726 NC
EU:C1725 470p,C1726 470p, CN1202 NC

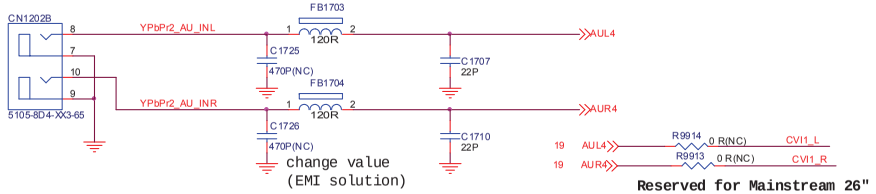

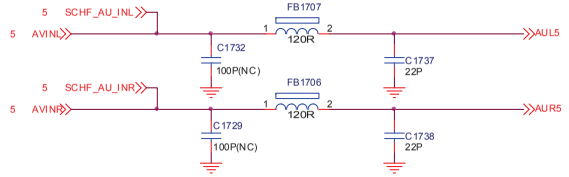

AP/China: C1732 NC ,C1729 NC
EU: C1732 100p ,C1729 100p , CN1207 NC

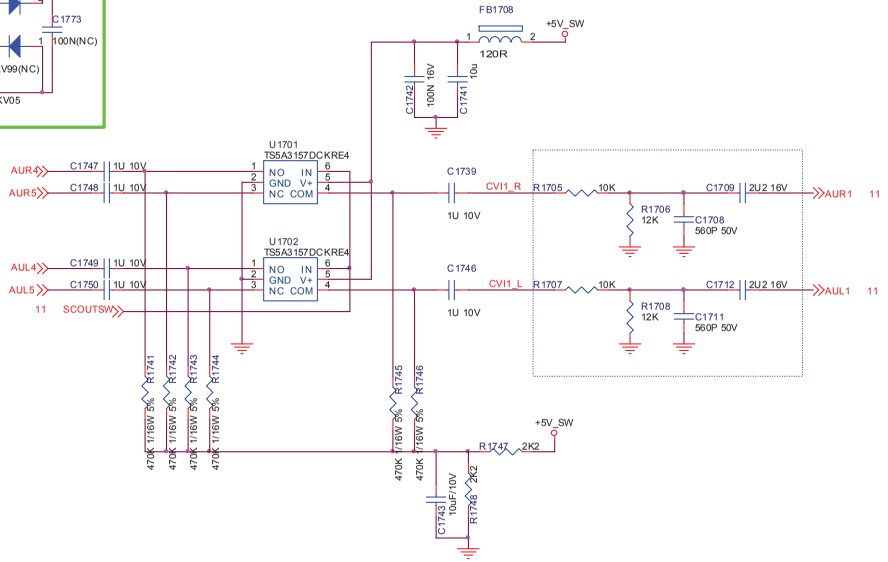

TPV (Top Victory Electronics Co., Ltd.)		OEM MODEL		Size	Custom
站點瓜旗股	T3422-1-X-X-3-20090506	TPV MODEL		Rev	1
Key Component	19: AUDIO I/F AND SPIDF OUT	PCB NAME	715G3422		
Date	Wednesday, May 06, 2009	Sheet	19 of 21	称爹	

英华家电维修资料软件专用 购买QQ:505966338

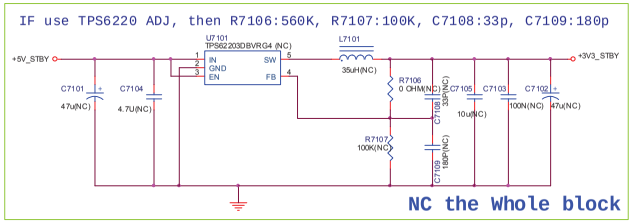

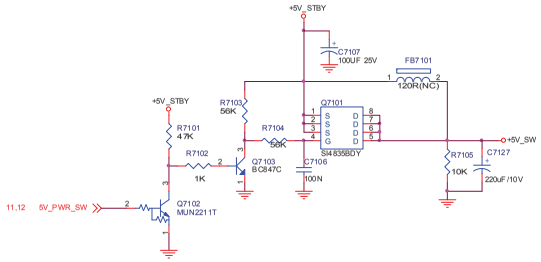

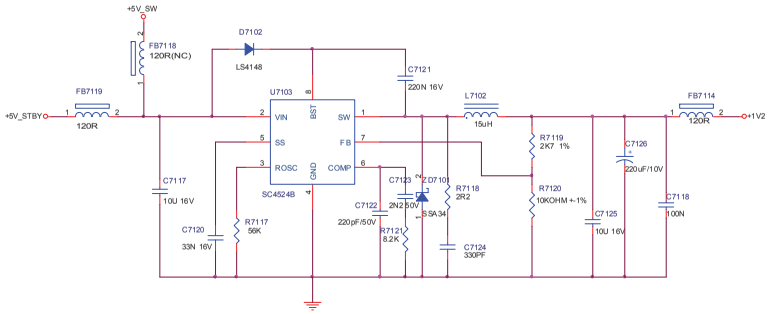

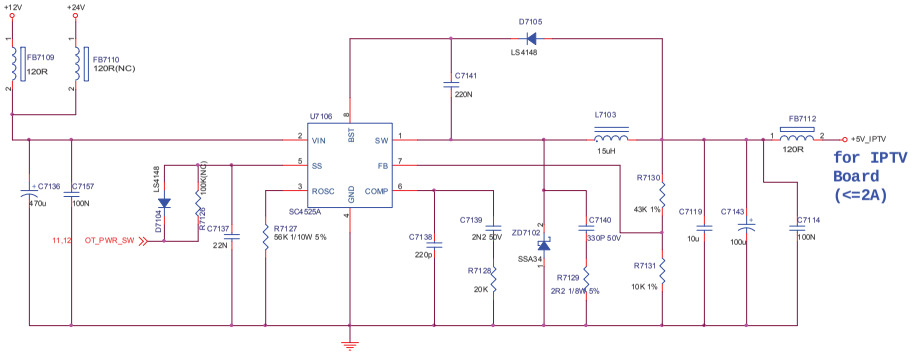

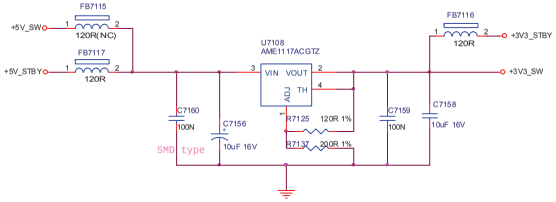

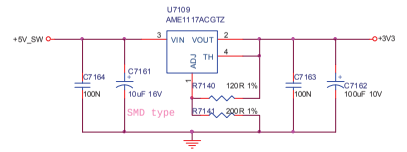

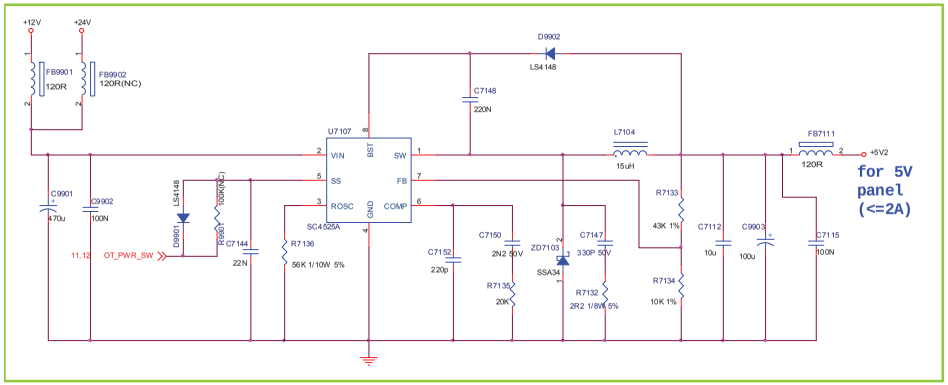

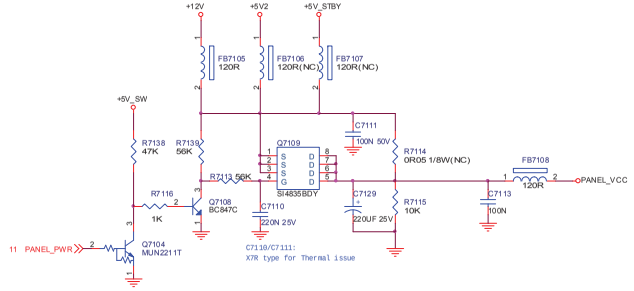

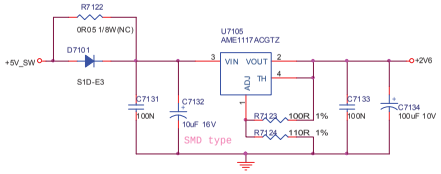

TPV (Top Victory Electronics Co., Ltd.)		OEM MODEL		Size Custom
版面压版面	T3422-1-X-X-3-2000506	TPV MODEL		Rev 1
Key Component	20. DC-DC POWER	PCB NAME	715G3422	
Date	Wednesday, May 06, 2009	Sheet	20 of 21	标签

英华家电维修资料软件专用 购买QQ:505966338

6.2 电源板

L32DS99X　715G3332P01H20003M

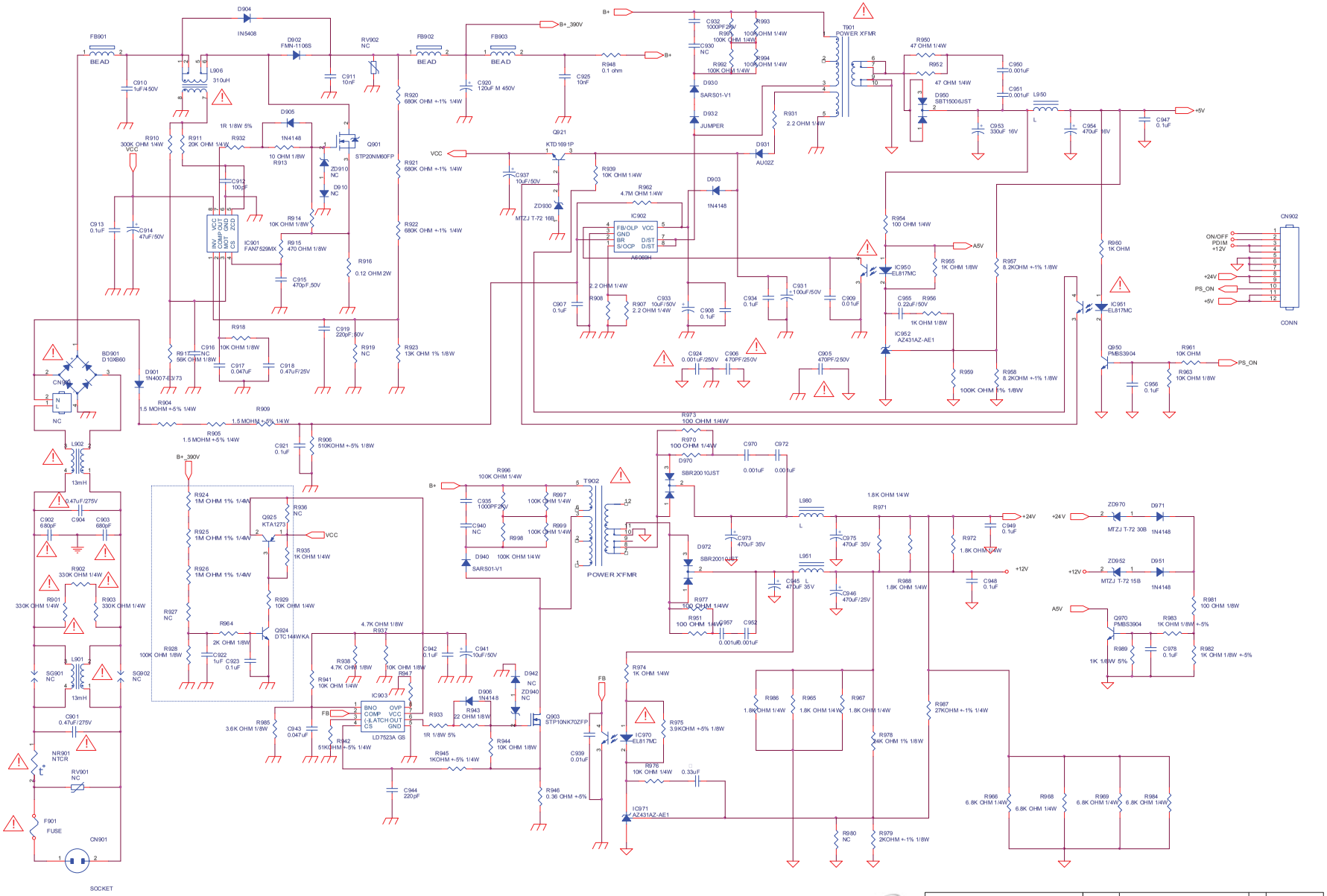

英华家电维修资料软件专用 购买QQ:505966338

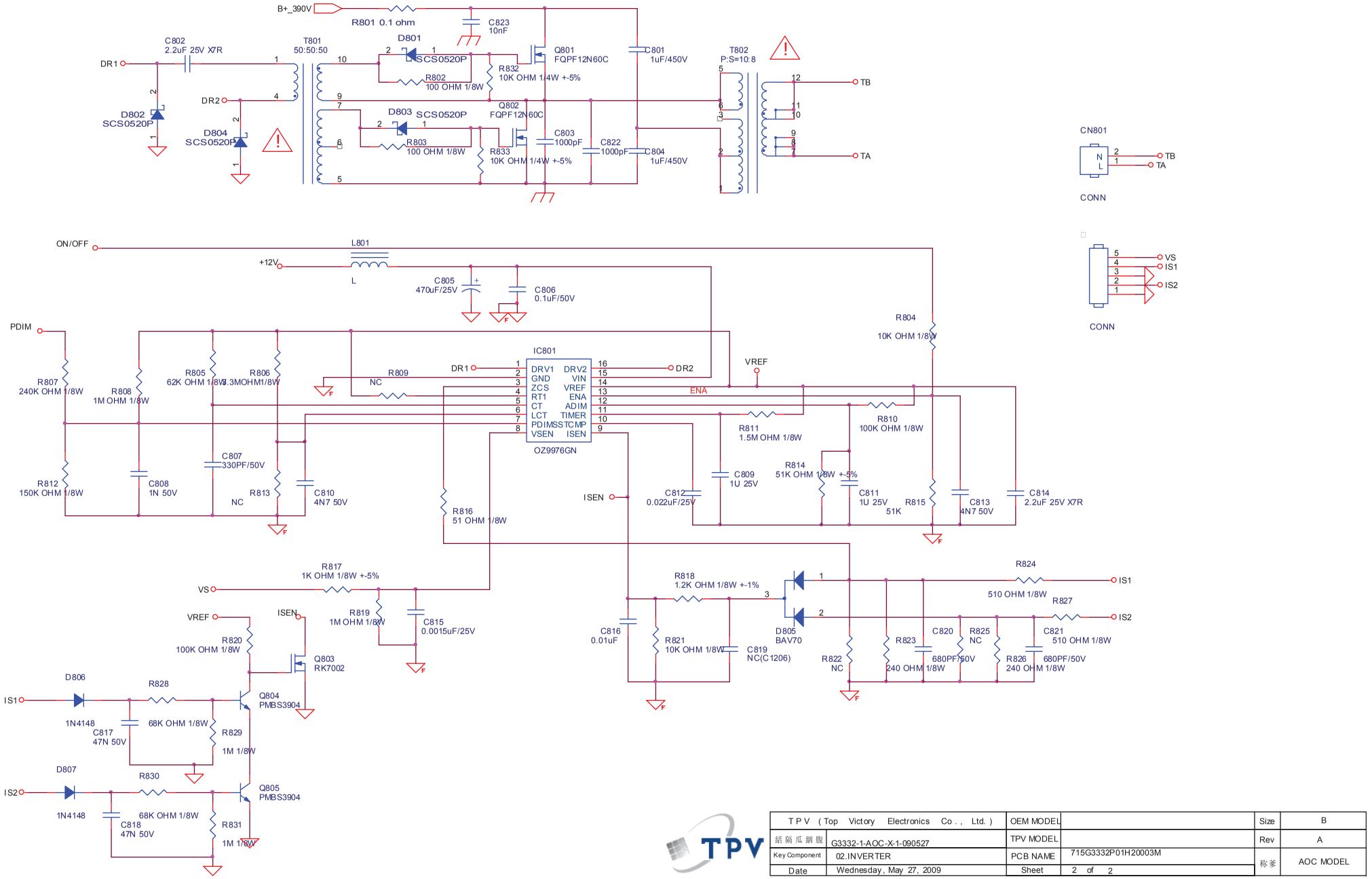

TPV (Top Victory Electronics Co., Ltd.)		OEM MODEL		Size	B
結構瓜鋼腹	G3332-1-AOC-X-1-090527	TPV MODEL		Rev	A
Key Component	02.INVERTER	PCB NAME	715G3332P01H20003M	称爹	AOC MODEL
Date	Wednesday, May 27, 2009	Sheet	2 of 2		

英华家电维修资料软件专用 购买QQ:505966338

L32DS99X 715G3333-1

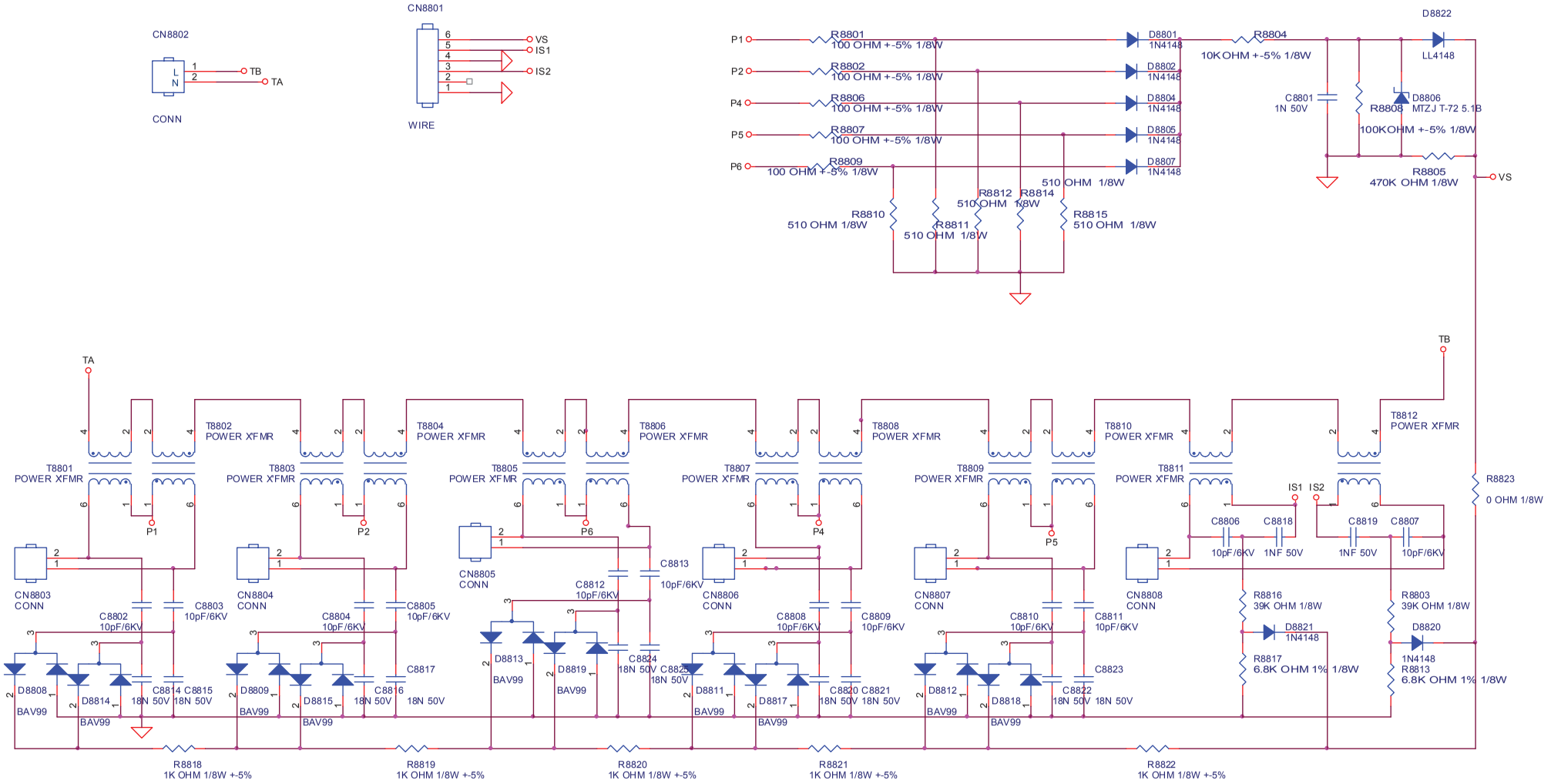

TPV (Top Victory Electronics Co., Ltd.)		OEM MODEL		Size	B
結 隔 瓜 銅 股		TPV MODEL		Rev	A
Key Component	02.INVERTER	PCB NAME	715G3333-1	称 爹	
Date	Tuesday, March 03, 2009	Sheet	1 of 2		

英华家电维修资料软件专用 购买QQ:505966338

L42DS99X 715G3351-1-HV

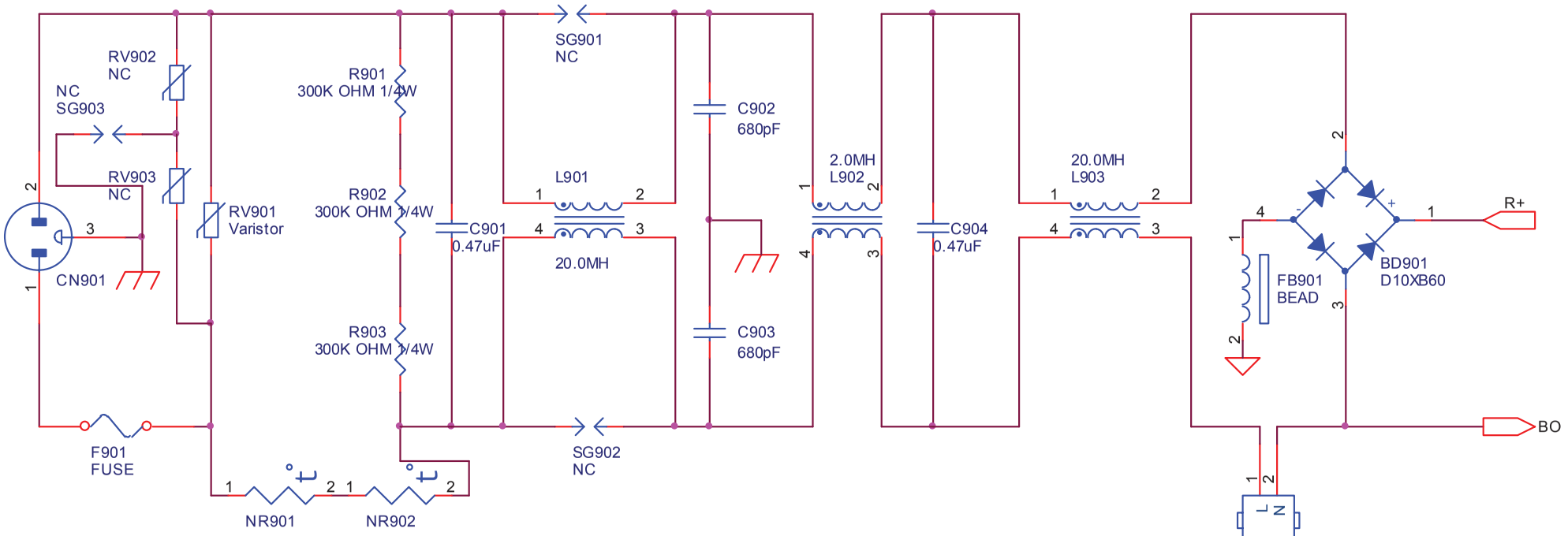

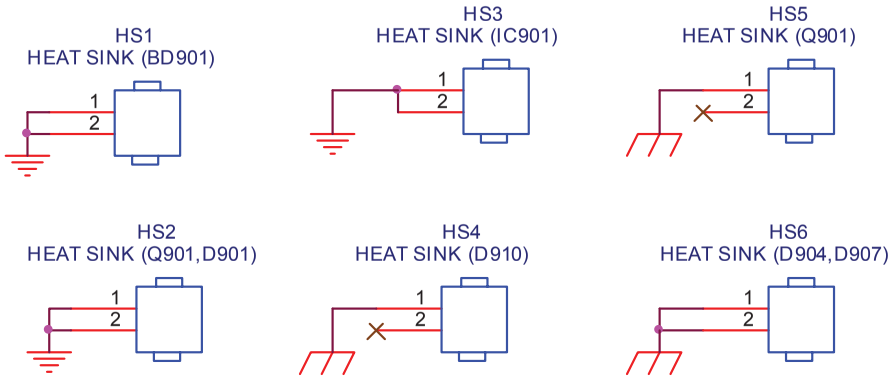

TPV (Top Victory Electronics Co., Ltd.)		OEM MODEL		Size	A
結隔瓜綑腹	G3351-H-X-X-1-0890216	TPV MODEL		Rev	1.0
Key Component	02.ACside	PCB NAME	715G3351-H	称爹	
Date	Monday, February 16, 2009	Sheet	2 of 6		

英华家电维修资料软件专用 购买QQ:505966338

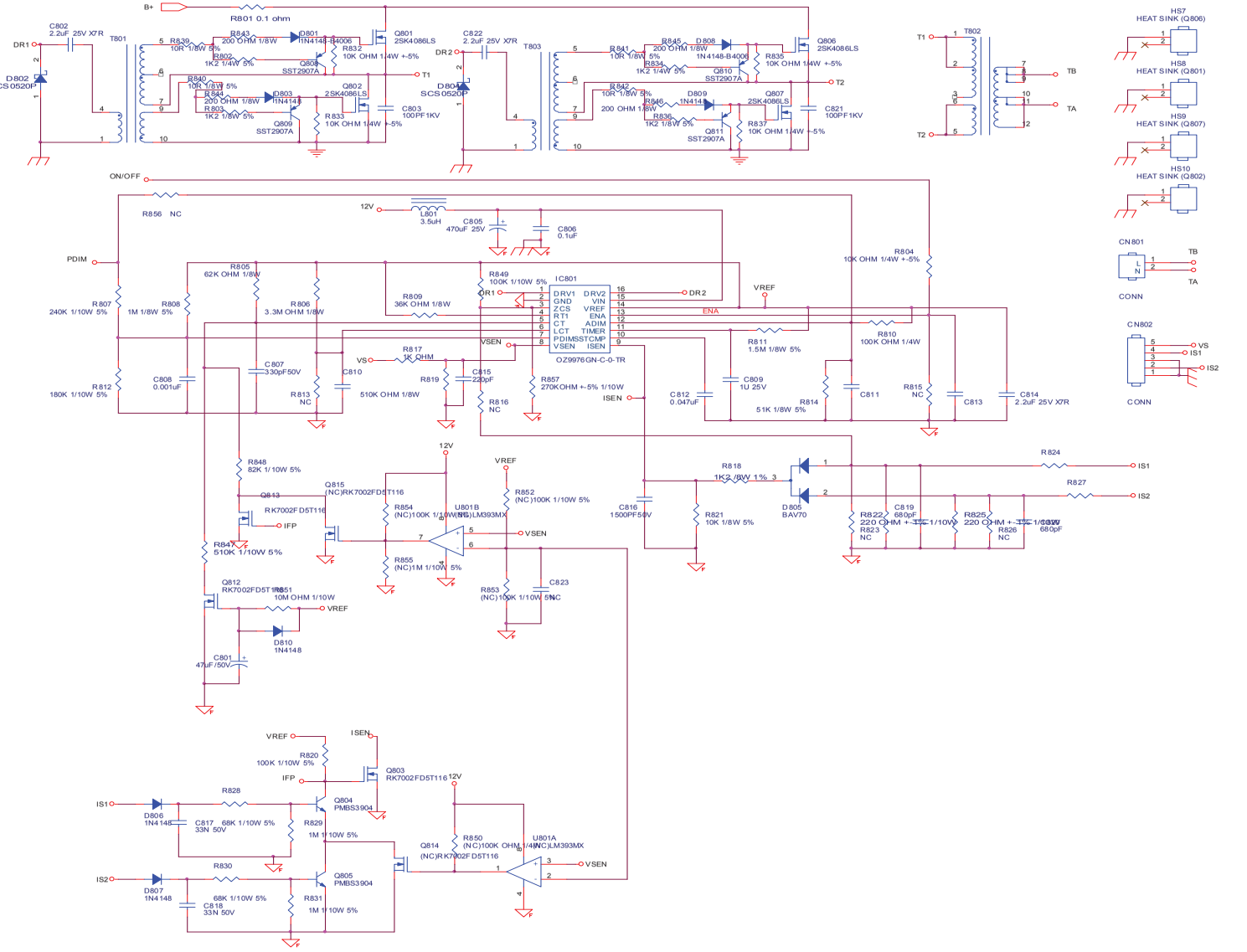

TPV (Top Victory Electronics Co., Ltd.)		OEM MODEL		Size	Custom
质隔瓜烟腹	G3351-H-X-X-1-0890216	TPV MODEL		Rev	1.0
Key Component	03.Inverter Control	PCB NAME	715G3351-H	称爹	
Date	Monday, February 16, 2009	Sheet	3 of 6		

英华家电维修资料软件专用 购买QQ:505966338

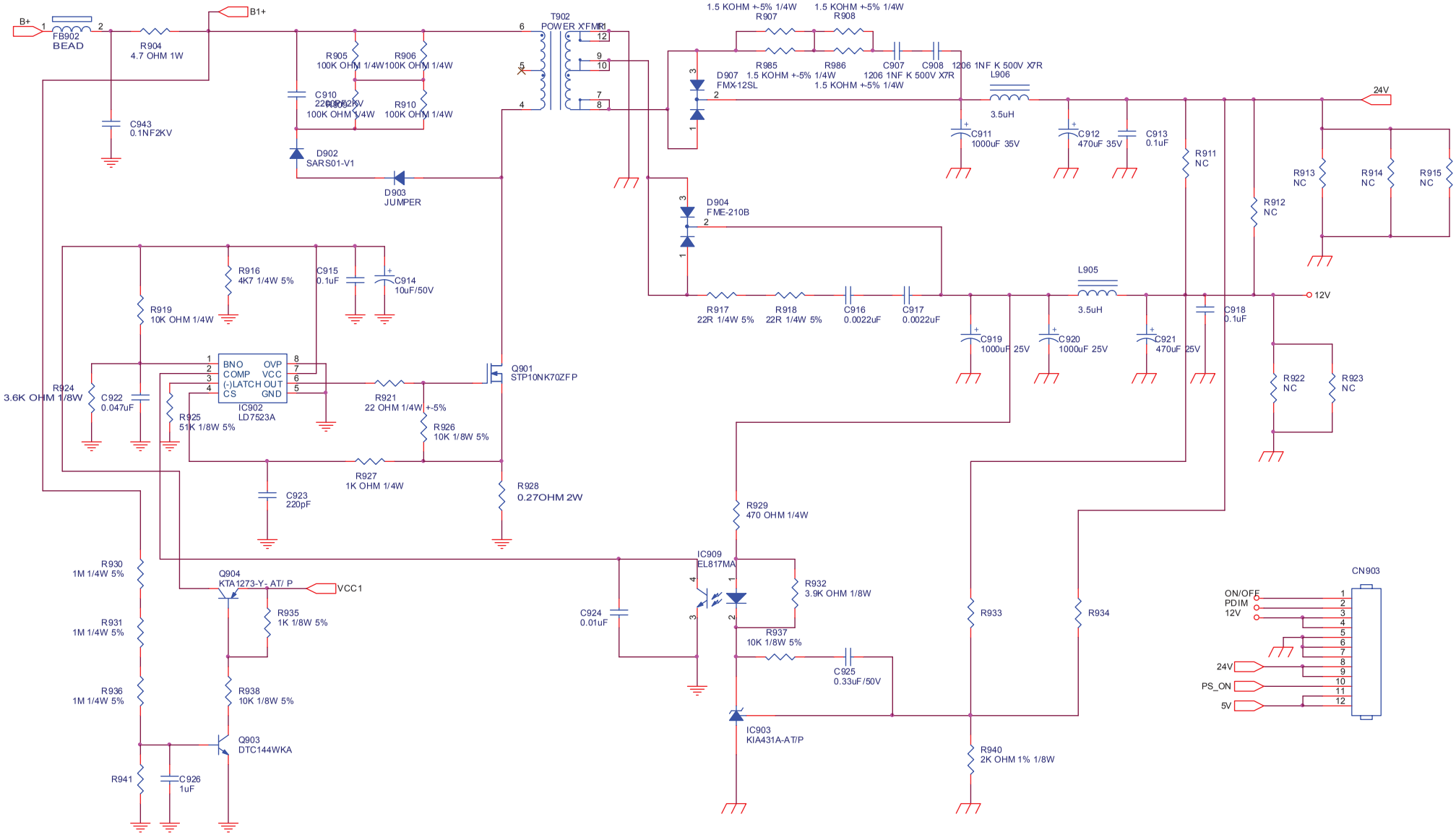

TPV (Top Victory Electronics Co., Ltd.)		OEM MODEL		Size	B
結陽瓜網腹	G3351-H-X-X-1-0890216	TPV MODEL		Rev	1.0
Key Component	04.MAINPOWER	PCB NAME	715G3351-H	称爹	
Date	Monday, February 16, 2009	Sheet	4 of 6		

英华家电维修资料软件专用 购买QQ:505966338

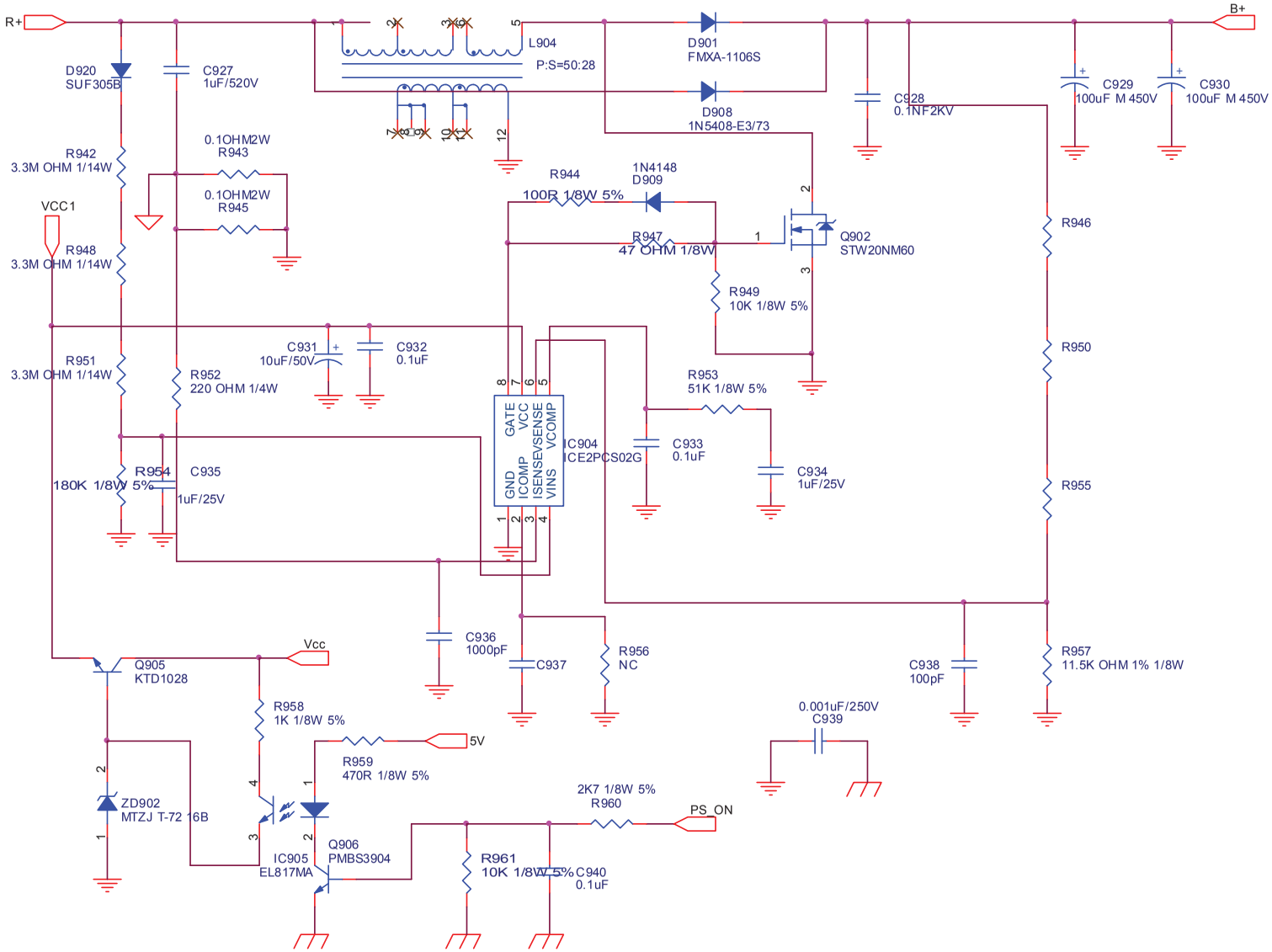

TPV (Top Victory Electronics Co., Ltd.)		OEM MODEL		Size	Custom
結隔瓜細腹	G3351-H-X-X-1-0890216	TPV MODEL		Rev	1.0
Key Component	04.MAINPOWER	PCB NAME	715G3351-H	称爹	
Date	Sunday, August 16, 2009	Sheet	4 of 6		

英华家电维修资料软件专用 购买QQ:505966338

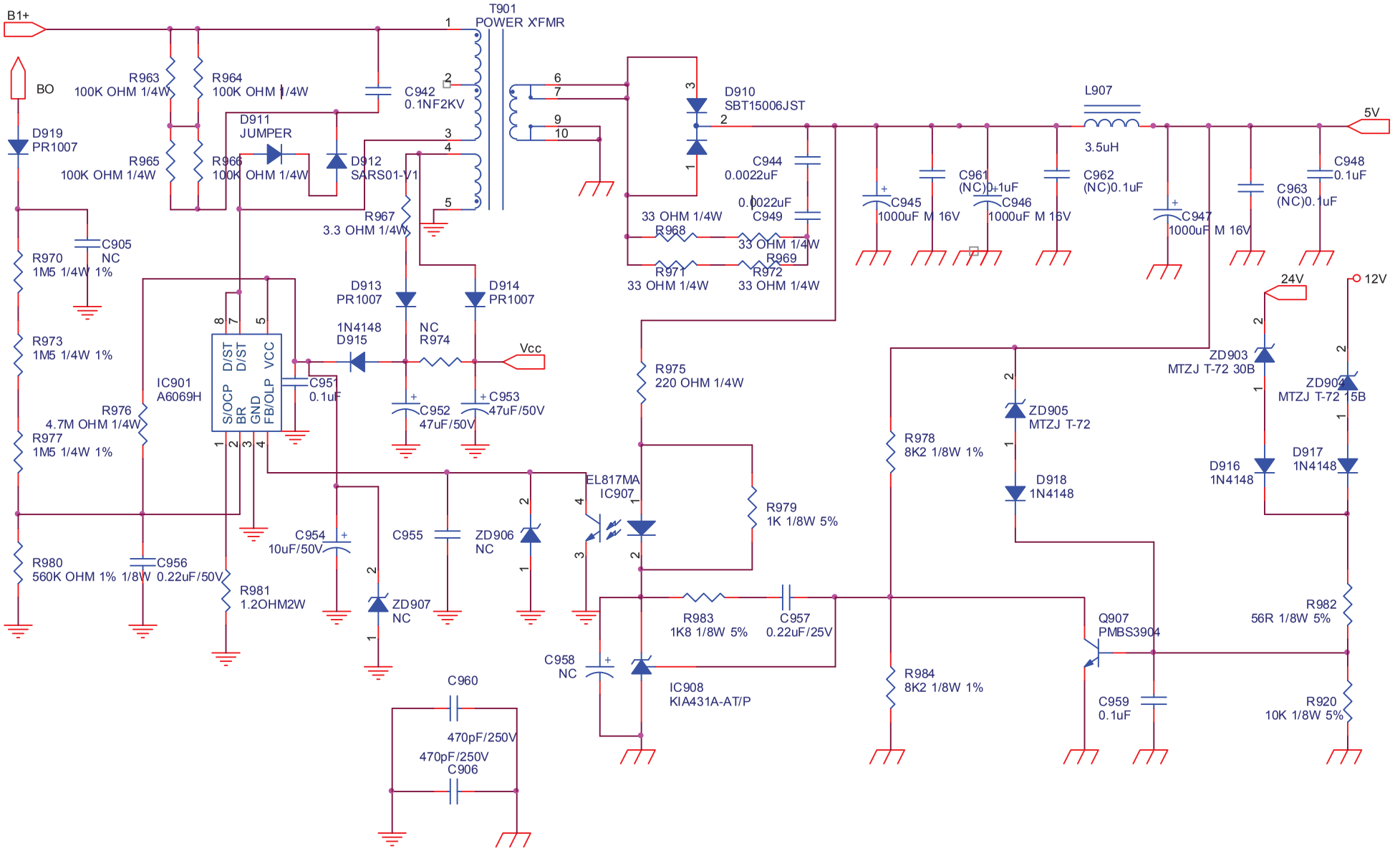

T P V （Top Victory Electronics Co . , Ltd. ）		OEM MODEL		Size	Custom
結 隔 瓜 絹 腹	G3351-H-X-X-1-0890216	TPV MODEL		Rev	1.0
Key Component	06.STANDBY	PCB NAME	715G3351-H	称 爹	
Date	Monday, February 16, 2009	Sheet	6 of 6		

英华家电维修资料软件专用 购买QQ:505966338

L42DS99X 715G3358-1

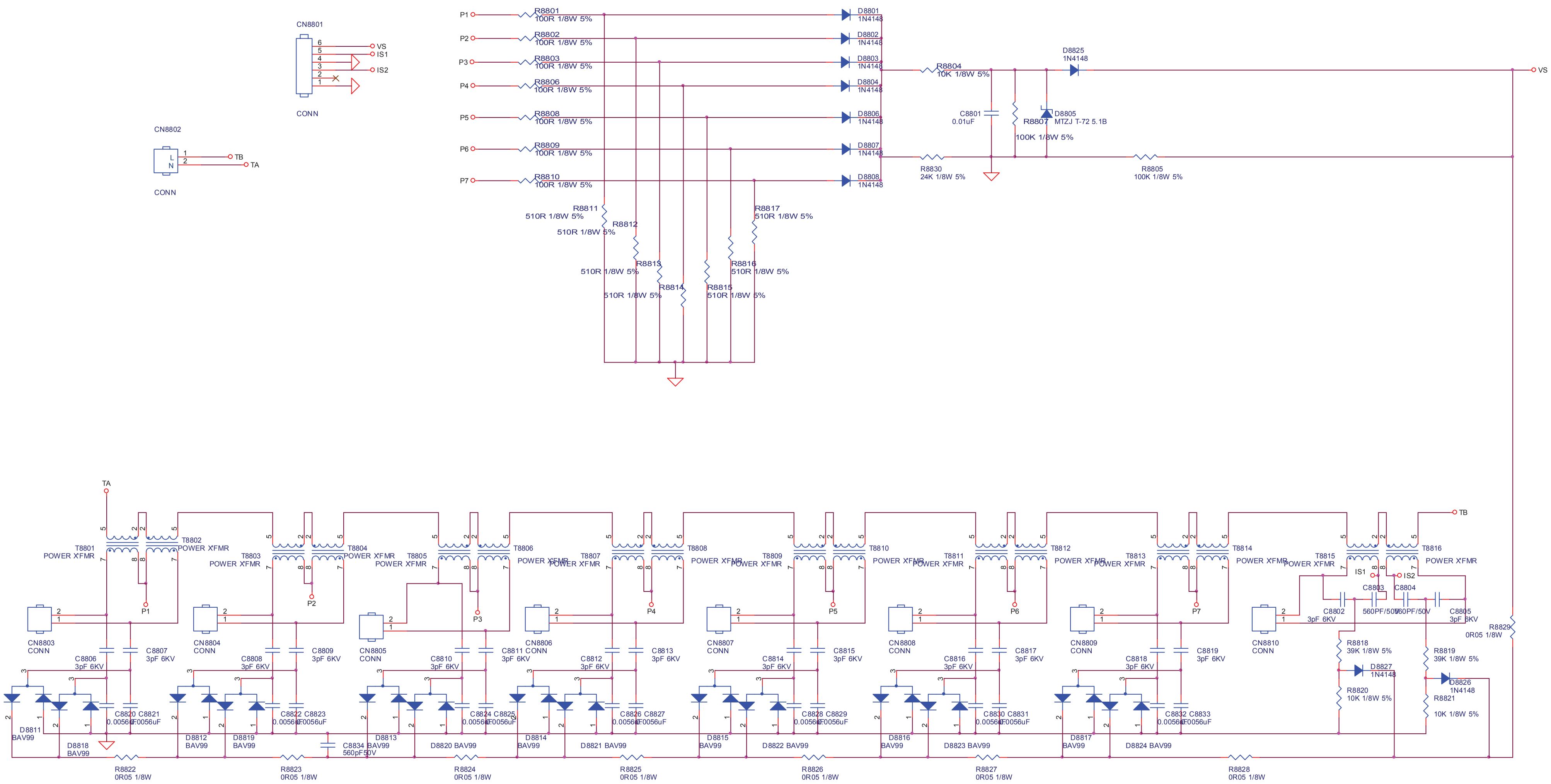

TPV (Top Victory Electronics Co., Ltd.)		OEM MODEL		Size	C
組 隔 瓜 圖 撒	G3358-F-X-X-2-090209	TPV MODEL		Rev	1.0
Key Component	02.INVERTER	PCB NAME	715G3358-F	核 著	
Date	Monday, February 09, 2009	Sheet	2 of 2		

英华家电维修资料软件专用 购买QQ:505966338

6.3 按键板

715G3403-2

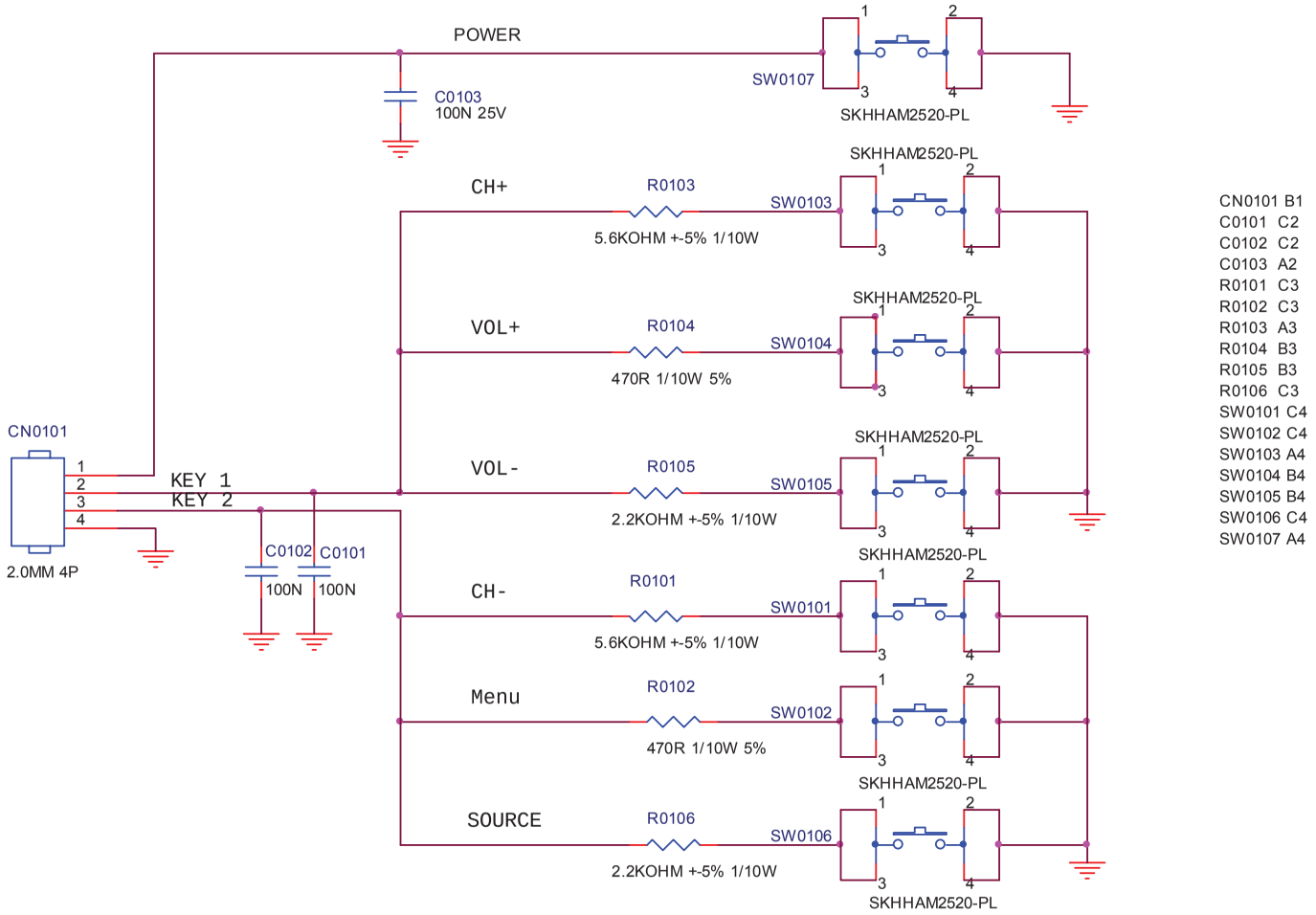

CN0101 B1
C0101 C2
C0102 C2
C0103 A2
R0101 C3
R0102 C3
R0103 A3
R0104 B3
R0105 B3
R0106 C3
SW0101 C4
SW0102 C4
SW0103 A4
SW0104 B4
SW0105 B4
SW0106 C4
SW0107 A4

TPV (Top Victory Electronics Co., Ltd.)		OEM MODEL	AOC 2k9	Size	A
紙隔瓜網腹	T3403-2-X-X-2-20090403	TPV MODEL		Rev	1
Key Component	KEY BOARD	PCB NAME	715G3403-2	称爹	
Date	Friday, April 03, 2009	Sheet	1 of 1		

英华家电维修资料软件专用 购买QQ:505966338

6.4 IR 板
715G3401-2

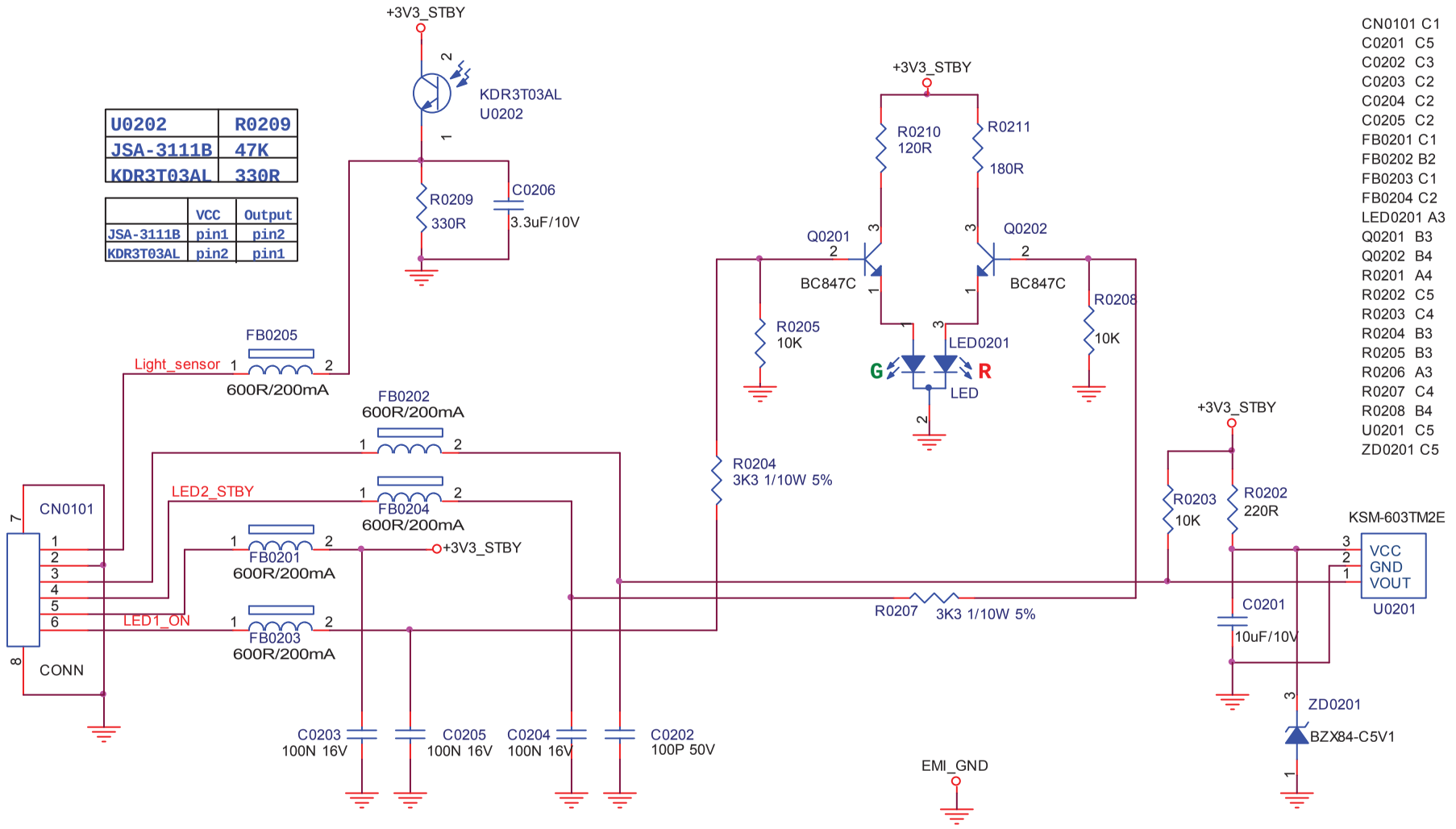

T P V （Top Victory Electronics Co., Ltd.）		OEM MODEL	AOC 2K9 IR BOARD	Size	A
結構組別	T3401-1-X-X-1-20090415	TPV MODEL		Rev	1
Key Component	IR BOARD	PCB NAME	715G3401-1	称爹	
Date	Wednesday, April 15, 2009	Sheet	1 of 1		

英华家电维修资料软件专用 购买QQ:505966338

6.5 IPTV 板
715G3459-E

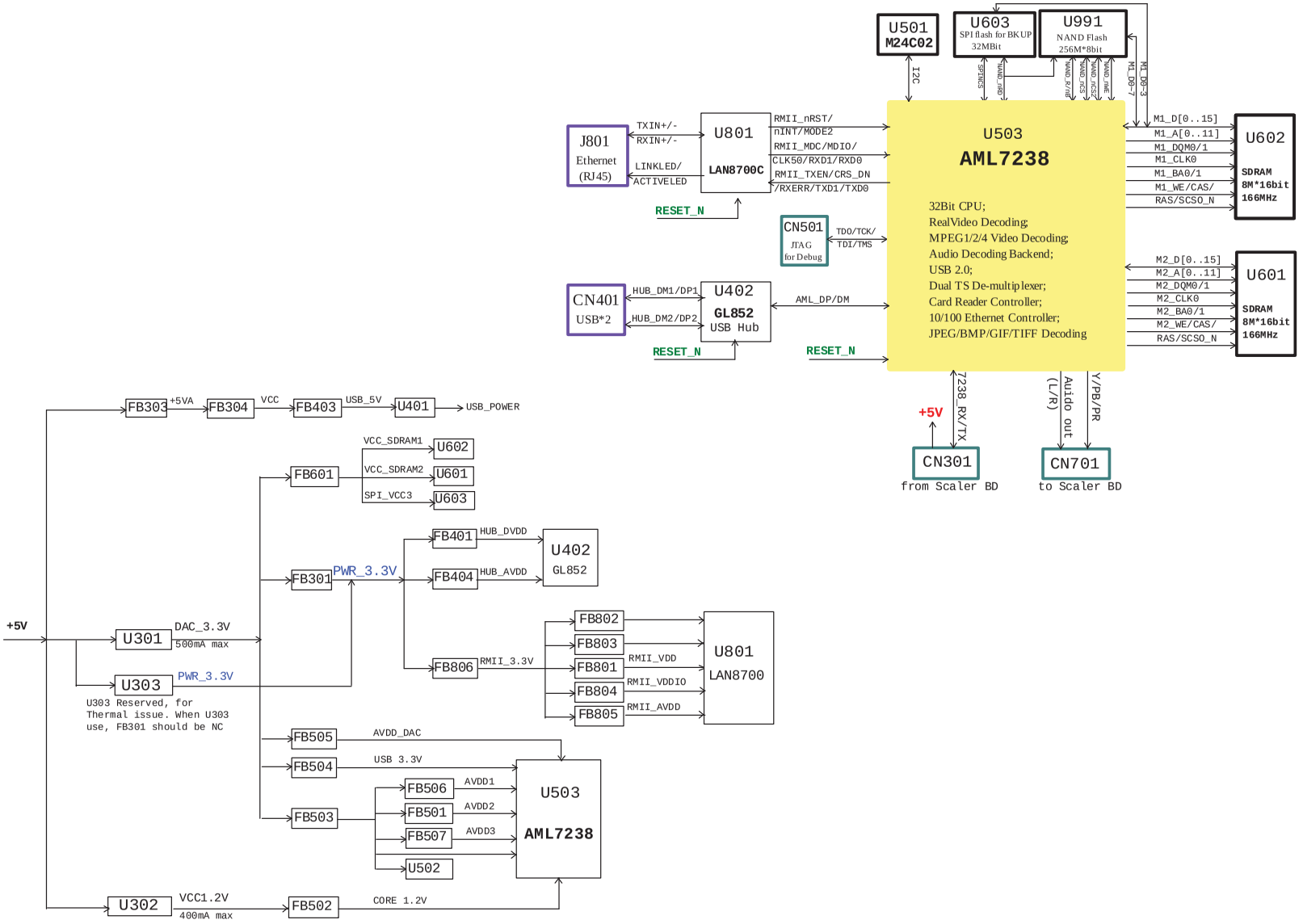

TPV (Top Victory Electronics Co., Ltd.)		OEM MODEL		Size	Custom
結 隔 瓜 鋼 腹	T3459-E-X-X-1-090813	TPV MODEL	AOC 2K9 IPTV BOARD	Rev	A
Key Component	02: Block Diagram / PWR Distribtion	PCB NAME	715G3459	称 爹	
Date	Thursday, August 13, 2009	Sheet	2 of 8		

英华家电维修资料软件专用 购买QQ:505966338

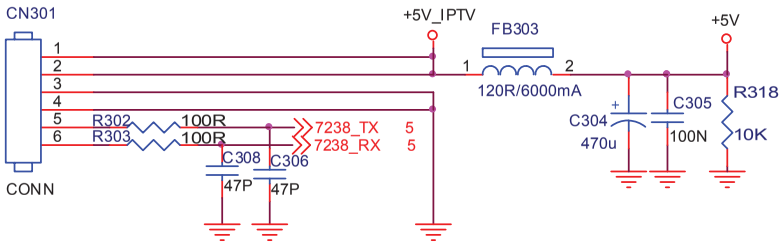

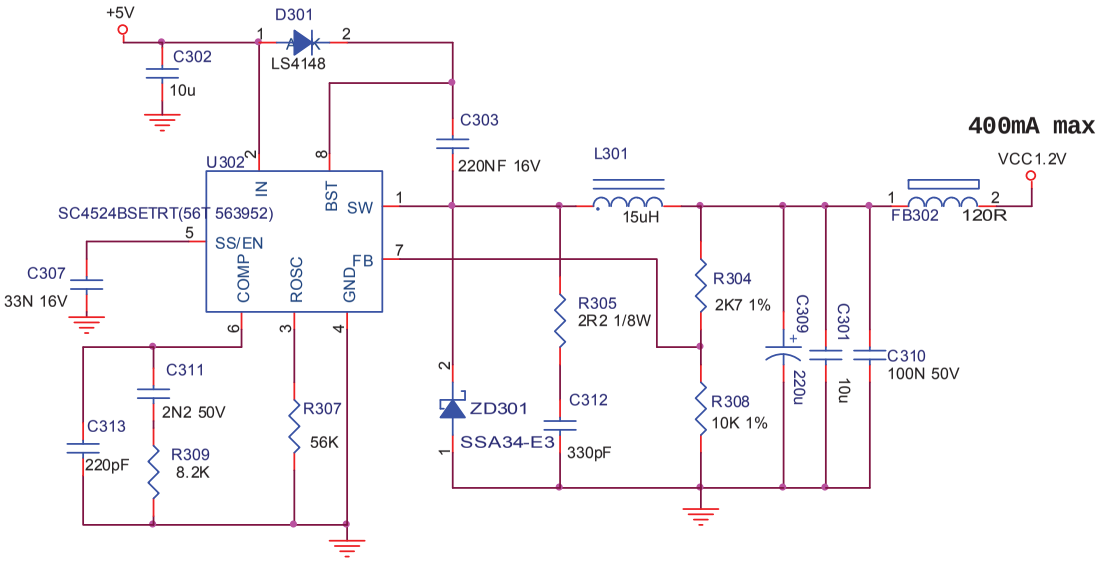

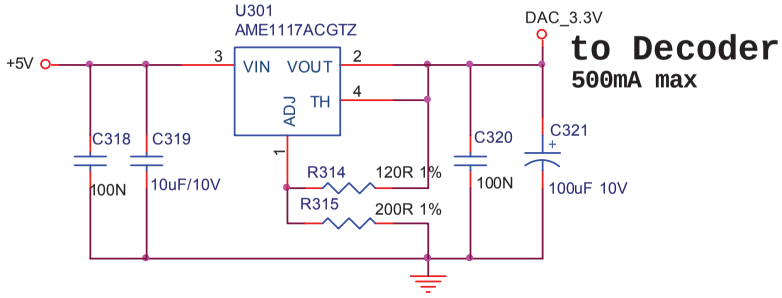

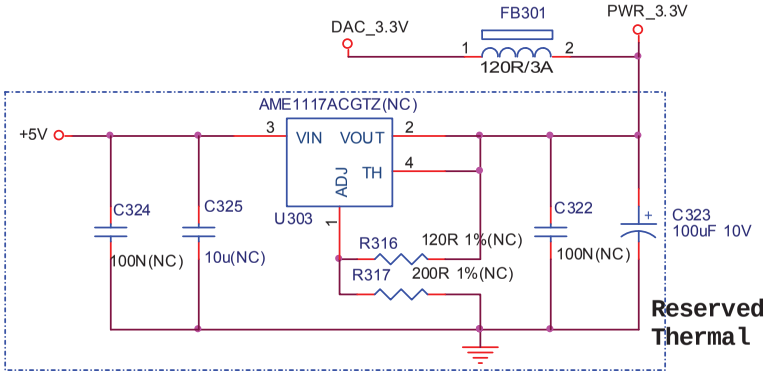

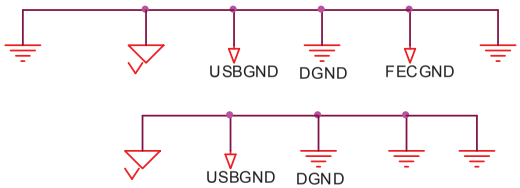

TPV (Top Victory Electronics Co., Ltd.)		OEM MODEL		Size	Custom
結隔瓜細腹	T3459-E-X-X-1-090813	TPV MODEL	AOC 2K9 IPTV BOARD	Rev	A
Key Component	03: Power	PCB NAME	715G3459	称爹	
Date	Thursday, August 13, 2009	Sheet	3 of 8		

英华家电维修资料软件专用 购买QQ:505966338

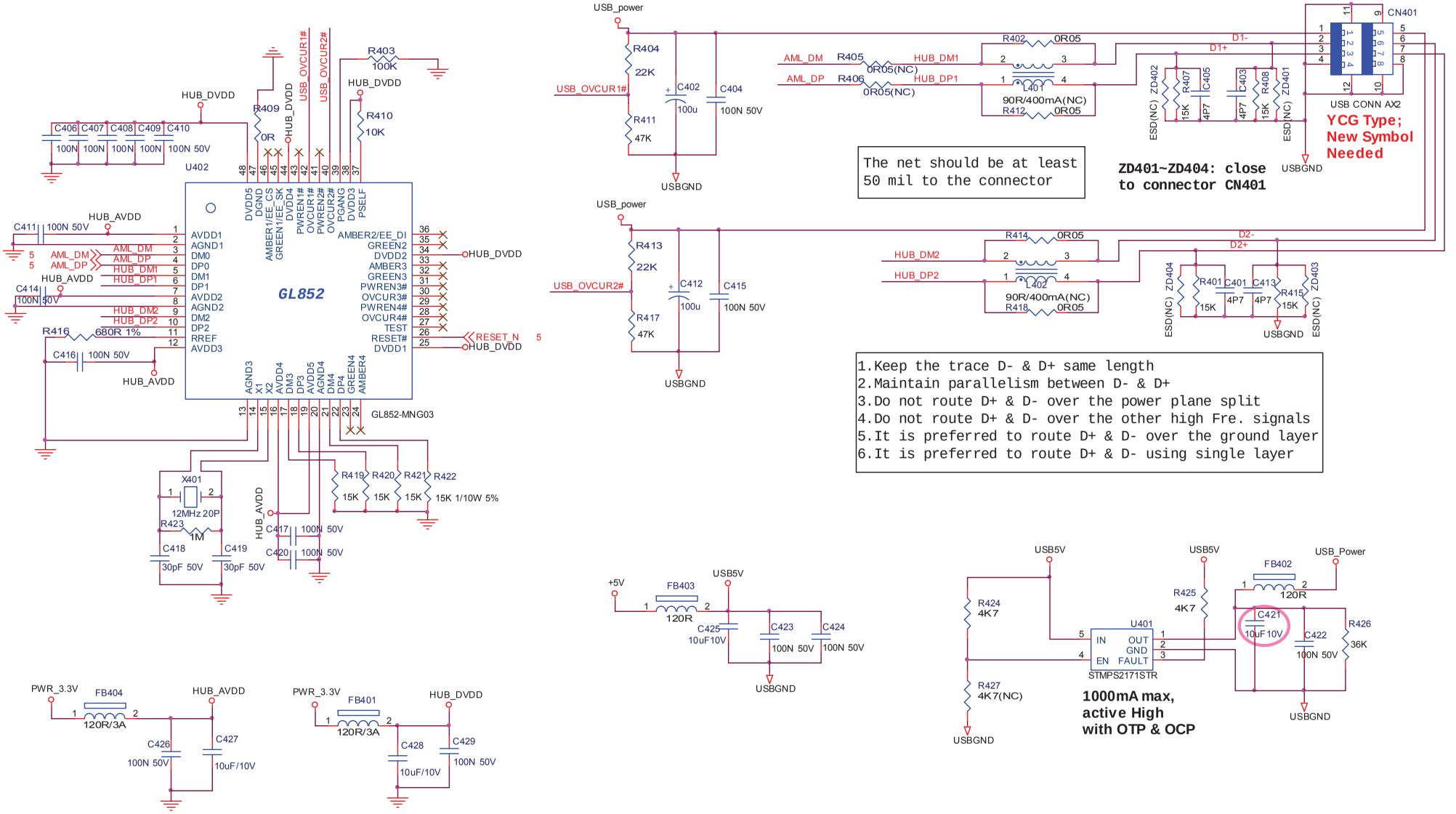

TPV (Top Victory Electronics Co., Ltd.)		OEM MODEL		Size	Custom
紙隔瓜細腹	T3459-E-X-X-1-090813	TPV MODEL	AOC 2K9 IPTV BOARD	Rev	A
Key Component	04: USB Input Port	PCB NAME	715G3459	称爹	
Date	Thursday, August 13, 2009	Sheet	4 of 8		

英华家电维修资料软件专用 购买QQ:505966338

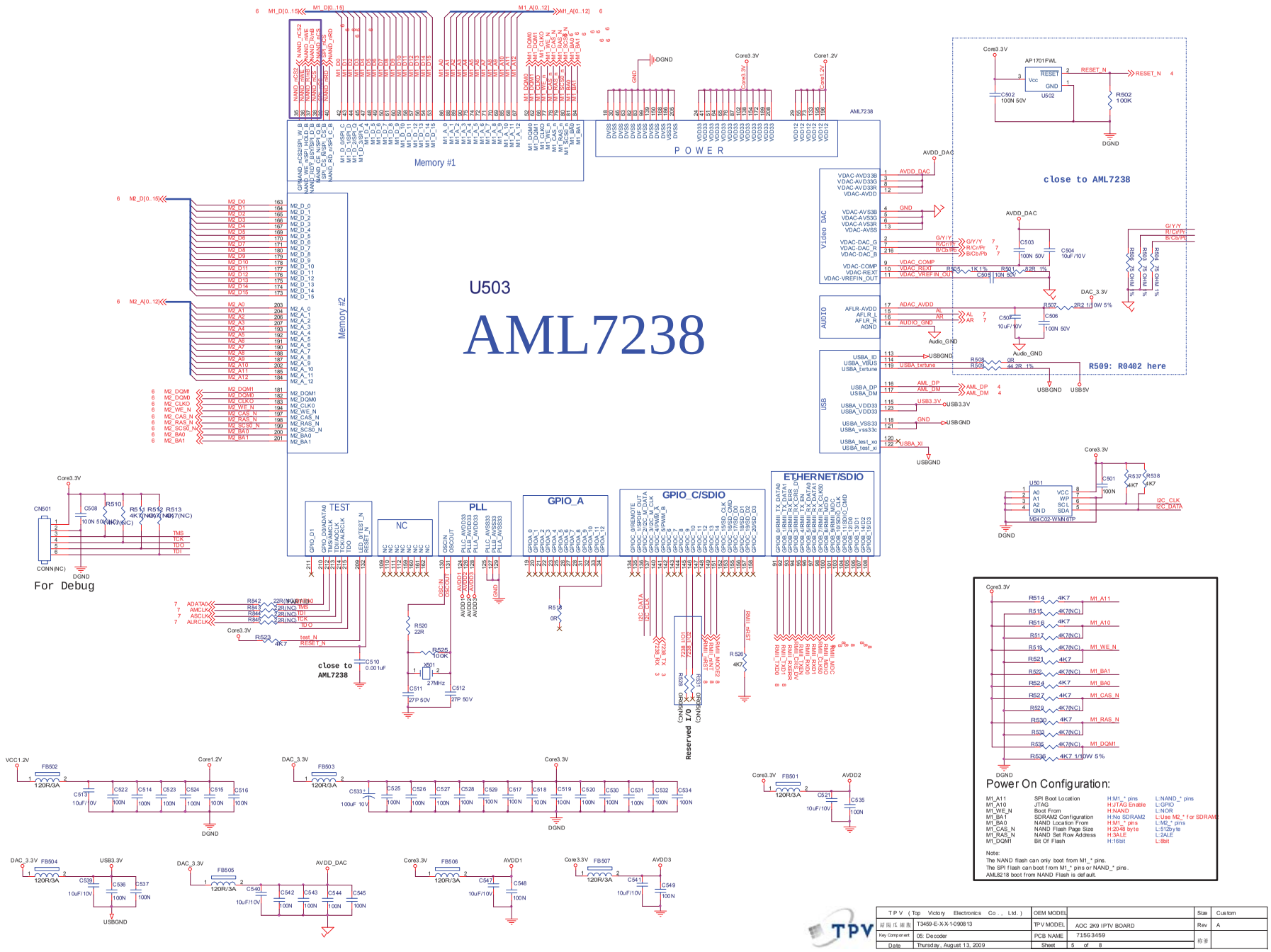

英华家电维修资料软件专用 购买QQ:505966338

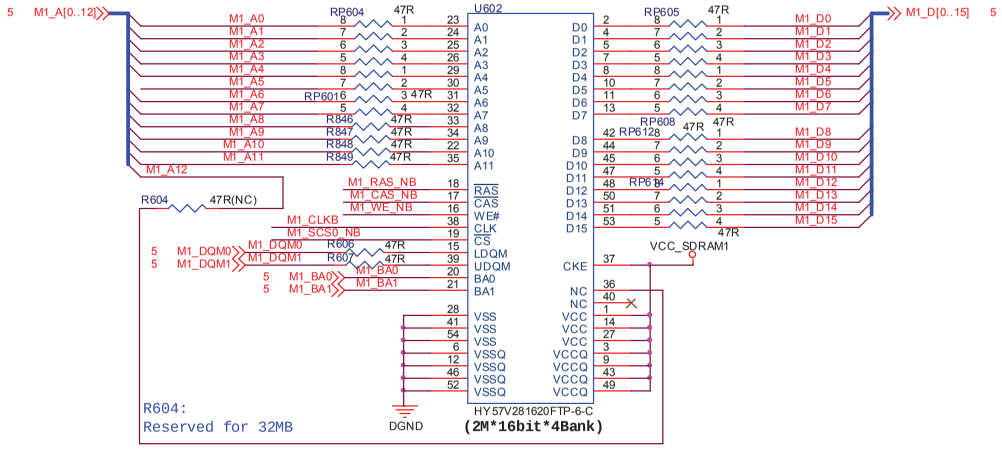

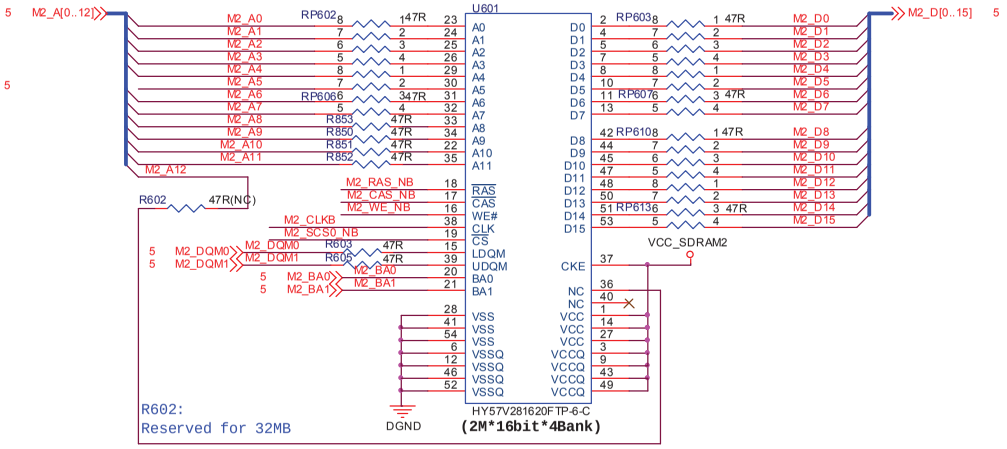

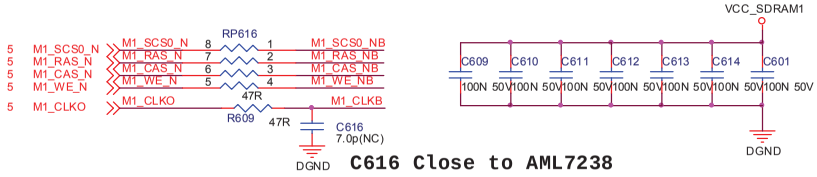

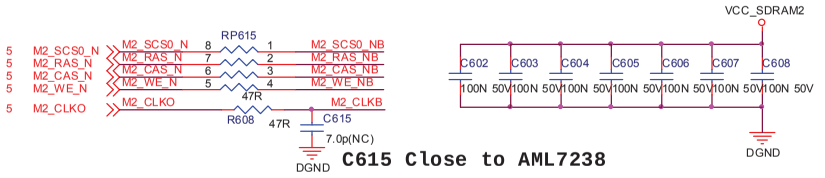

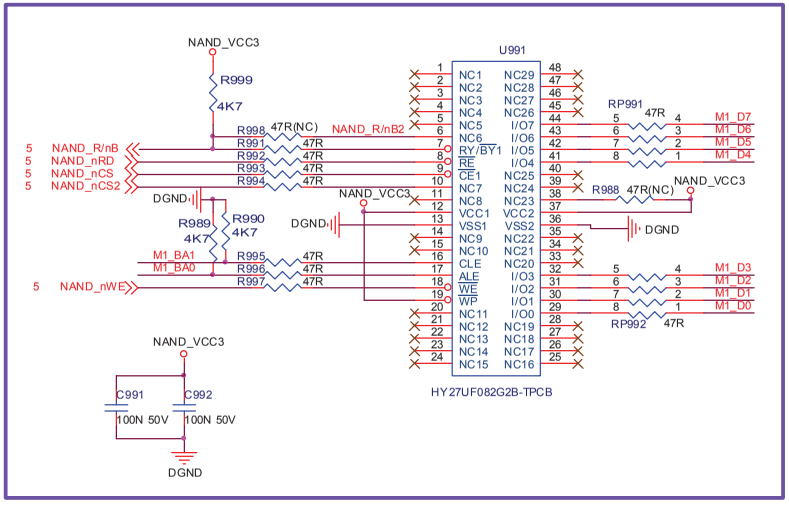

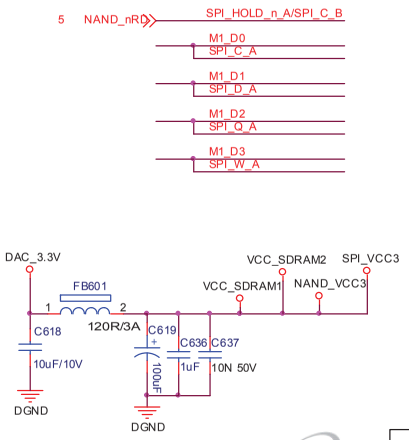

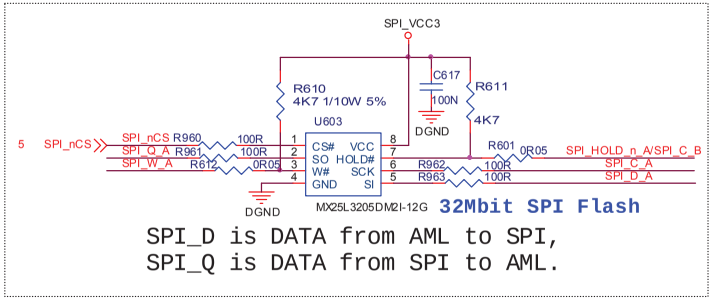

TPV (Top Victory Electronics Co., Ltd.)		OEM MODEL		Size	Custom
結隔瓜網腹	T3459-E-X-X-1-090813	TPV MODEL	AOC 2K9 IPTV BOARD	Rev	A
Key Component	06: SDRAM & FLASH	PCB NAME	715G3459	称爹	
Date	Thursday, August 13, 2009	Sheet	6 of 8		

英华家电维修资料软件专用 购买QQ:505966338

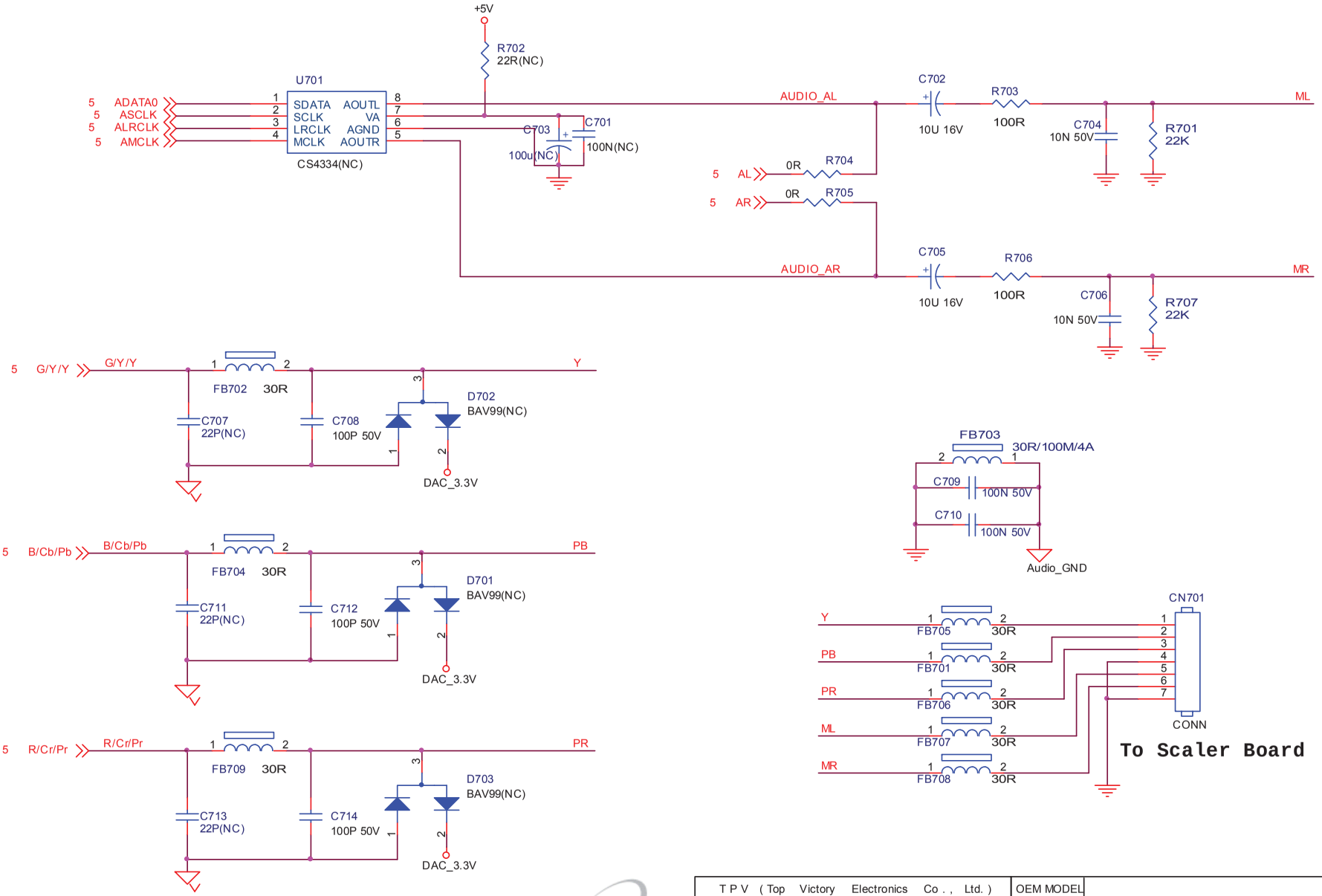

T P V (Top Victory Electronics Co., Ltd.)		OEM MODEL		Size	Custom
結 隔 瓜 細 腹	T3459-E-X-X-1-090813	TPV MODEL	AOC 2K9 IPTV BOARD	Rev	A
Key Component	07: Video&Audio output to scaler BD	PCB NAME	715G3459	称爹	
Date	Thursday, August 13, 2009	Sheet	7 of 8		

英华家电维修资料软件专用 购买QQ:505966338

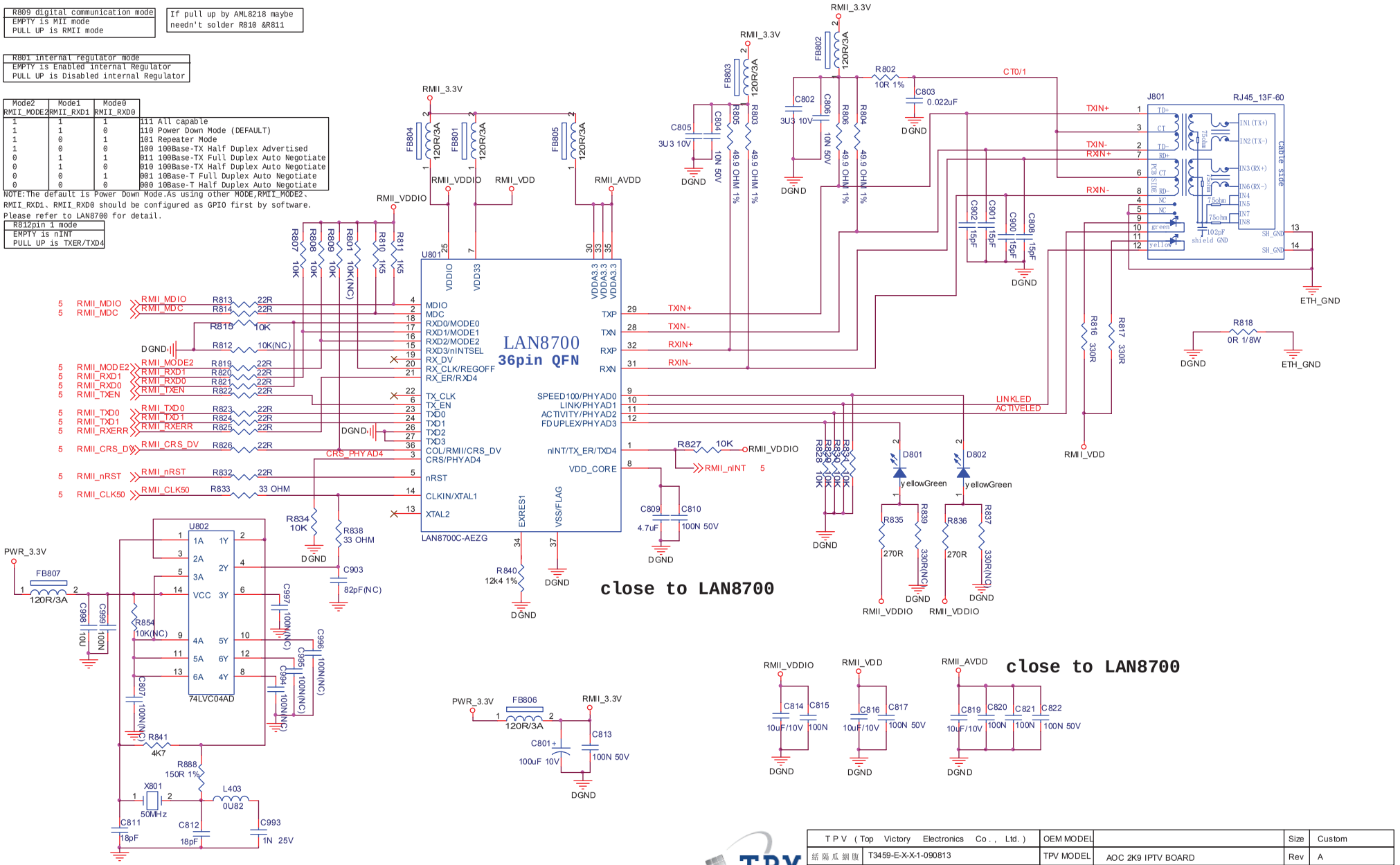

TPV (Top Victory Electronics Co., Ltd.)	OEM MODEL		Size / Custom
結隔瓜細腹 T3459-E-X-X-1-090813	TPV MODEL	AOC 2K9 IPTV BOARD	Rev / A
Key Component 08: Ethernet	PCB NAME	715G3459-E	称爹
Date Thursday, August 13, 2009	Sheet	8 of 8	

英华家电维修资料软件专用 购买QQ:505966338

7. BOM

备注：以下 BOM 料号后续可能会做变更，故仅供参考，恕不另行通知。准确的料号请查询 CS 网站：http://cs.tpv.com.cn/。

7.1 L32DS99X E329M1ND4WA6NN

点位	组件	对象描述	备注
	040G 581689 4A	BARCODE LABEL FOR 1	
	052G 1150522	PAPER TAPE	
	052G 1186	SMALL TAPE	
	052G 1211 B	CONDUCTIVE TAPE 85MM *40MM *0.09MM	
	052G 2191 A	PAPER TAPE	
	078G0120 2 M	SPEAKER 6 OHM 12W 160X42MM	
	089G214A18N IS	POWER CORD 1.8M FA37B201312180TP	
E09501	095G801312FA02	WIRE HARNESS 12P-12P 120MM 89122	
E09501	095G801312XA02	WIRE HARNESS 12P-12P 120MM S-LCDXXTA9973	2nd source
E09502	095G8014 4FA20	WIRE HARNESS 4P-4P 900MM 89125	
E09503	095G8014 4FA21	HARNESS 4P-2*(2*PAST) 800+450MM 89126	
E09502	095G8014 4XA20	WIRE HARNESS 4P-4P 900MM S-LCDXXTA9971	2nd source
E09503	095G8014 4XA21	WIRE HARNESS 4P-2*(2*PAST) 800+450MM	2nd source
E09504	095G8014 6FA08	WIRE HARNESS 6P-6P 160MM 89878	
E09504	095G8014 6XA08	WIRE HARNESS 6P-6P 60MM LCDXXTA0973	2nd source
E09505	095G8014 7FA15	WIRE HARNESS 7P-6P 650MM 89124	
E09506	095G8014 7FA17	WIRE HARNESS 7P-7P 320MM 89920	
E09505	095G8014 7XA15	WIRE HARNESS 7P-6P 650MM S-LCDXXTA9972	2nd source
E09506	095G8014 7XA17	WIRE HARNESS 7P-7P 320MM LCDXXTA0974	2nd source
E09507	095G801830FA25	LVDS 30P-2*15P 260MM 89147	
E09507	095G801830XA25	LVDS 30P-2*15P 260MM S-LVDSXTA9968	2nd source
E09508	095G8019 3FA02	WIRE HARNESS 3P-3P 120MM 89153	
E09508	095G8019 3XA02	WIRE HARNESS 3P-3P 120MM S-LCDXXTA9967	2nd source
	098GRABD2NCACJ	RC-GJ2100B-F	
	0M1G 340 4120	SCREW	
	0M1G 340 4120	SCREW	
	0M1G1430 6 47 CR3	SCREW	
	0M1G1730 8120	SCREW	
	0Q1G 930 10 47 CR3	SCREW	
	705TQ933J18	PLASTIC ASS'Y 32	
	P33T0132 VT 1L0100	FUNCITON KEY	
	705TQ934JB3	REAR COVER ASS'Y 32	
	0Q1G 930 10 47 CR3	SCREW	
	P15T0320101	BRACKET_VESA	
	P34T0300ADT 1L0100	COVER_REAR IO(CN)	
	P34T0304ADT 1L0130	REAR COVER 32	
	705TQ934JE8	BEZEL ASS'Y 32	
	036T 600 18115 GP	HIMERON	
	0Q1G 930 10 47 CR3	SCREW	
	P33T0135AFT 1C0100	LENS_IR	
	P34T0302 VT 1L0130	BEZEL	
	P34T0303ADTA1L0100	DECO	

英华家电维修资料软件专用 购买QQ:505966338

	Q36T 600 18113	CLOTH_GRIDDING	
	Q36T 600 18114	CLOTH_GRIDDING	
	Q52G 3 81	3M DOUBLE FACE TAPE	
	705TQ949001	COMSUPTIVE ASS'Y-A4	
E750	750TVM315BN313N000	PANEL V315B3-LN3 C1/C2 NH CMO	
E750	750TVM315BN3TQN000	PANEL V315B3-LN3 T FQ CMO	2nd source
	756TQ9CB 1D011	MAIN BOARD-CBPF93KDQ2	
U1401	056G1133 34	M24C02-WMN6TP	
U1401	056G1133918	IC AT24C02BN-SH-T 8-SOIC	
U4403	056G1133935	IC MX25L3205DMI-12G SOP-16	
SMTF-U4403	100TAMMK003D11	MCU ASS'Y-056G1133935	
SMTF-U1401	100TAMMKV01D1E	MCU ASS'Y-056G1133 34	
	756TQ9PT 1D001	PTPF BOARD-PTPF9QA2	
U603	056G1133939	IC MX25L3205DM2I-12G SOP-8	
SPTP-U603	100TAMMK005D11	MCU ASS'Y-056G1133939	
	040G 45762412B	CBPC LABEL	
CN7301	033G3802 4B Y	CONNECTOR	
CN6101	033G3802 4B Y	CONNECTOR	
CN9902	033G3802 6B Y	CONN 6PIN 2.0	
CN7306	033G3802 7B Y	CONNECTOR 7P 2.0 DIP	
CN9901	033G3802 7B Y	CONNECTOR 7P 2.0 DIP	
CN7201	033G380212B Y	WAFER	
CN7409	033G8027 8M X	WAFER 2.0MM DIP 2*4P	
C6121	067G 305471 6C	EC 470UF 35V KM 10X16MM	
C6122	067G 305471 6C	EC 470UF 35V KM 10X16MM	
C7136	067G 305471 6C	EC 470UF 35V KM 10X16MM	
C7210	067G 305471 6C	EC 470UF 35V KM 10X16MM	
C7210	067G 305471 6E	EC 470UF 35V RGA 10X16MM	
C7136	067G 305471 6E	EC 470UF 35V RGA 10X16MM	
C6122	067G 305471 6E	EC 470UF 35V RGA 10X16MM	
C6121	067G 305471 6E	EC 470UF 35V RGA 10X16MM	
C6127	067T 2154714CT	EC 470UF 25V GF 10X12MM	
C6130	067T 2154714CT	EC 470UF 25V GF 10X12MM	
C7207	067T 2154714CT	EC 470UF 25V GF 10X12MM	
C7210	067T 305471 6K	EC 470UF 35V PF 10X16MM	
C7136	067T 305471 6K	EC 470UF 35V PF 10X16MM	
C6122	067T 305471 6K	EC 470UF 35V PF 10X16MM	
C6121	067T 305471 6K	EC 470UF 35V PF 10X16MM	
L6101	073G 253900 L	CHOKE COIL 35UH+/-10% 82MOHM DR10*8	
L6102	073G 253900 L	CHOKE COIL 35UH+/-10% 82MOHM DR10*8	
L6101	073G 253900 LS	CHOKE COIL 35UH+/-10% 82MOHM DR10*8	
L6102	073G 253900 LS	CHOKE COIL 35UH+/-10% 82MOHM DR10*8	
L1101	073G 253920 H	CHOKE COIL 150UH+/-10% 50MOHM DR10*8	
L7102	073T 253916 H	CHOKE COIL 15UH+/-10% 38MOHM DR10*8	
L7103	073T 253916 H	CHOKE COIL 15UH+/-10% 38MOHM DR10*8	
L7102	073T 253916 LS	CHOKE COIL 15UH+/-10% 38MOHM DR10*8	
L7103	073T 253916 LS	CHOKE COIL 15UH+/-10% 38MOHM DR10*8	

英华家电维修资料软件专用 购买QQ:505966338

L6101	073T 253B00 H	CHOKE COIL 35.0UH+/-10% 82MOHM	
L6102	073T 253B00 H	CHOKE COIL 35.0UH+/-10% 82MOHM	
CN1207	088G 78 13938 YG	RCA JACK 1*3 Y/W/R V/A RCA-346D-03	
CN1205	088G 78 13938 YG	RCA JACK 1*3 Y/W/R V/A RCA-346D-03	
CN1201	088G 78 13942 YG	RCA JACK 1*5 G/B/R/W/R RCA-512DF	
CN1202	088G 78 13942 YG	RCA JACK 1*5 G/B/R/W/R RCA-512DF	
CN1703	088G 302A17 YG	PHONE JACK 3.5MM 3P V/T GREEN	
CN1401	088G 35315F FX	D-SUB 15PIN FEMALE VERTICAL 附螺絲	
CN1705	088T 78 8904 TN	RCA JACK 1P WHITE 5105-810-001-A9	
CN1705	088T 78 8A04 YG	RCA JACK 1P BLACK RCA-176D-01	
CN1205	088T 78 13938 JC	RCA JACK 1*3 Y/W/R V/A MKC21-093AN	
CN1207	088T 78 13938 JC	RCA JACK 1*3 Y/W/R V/A MKC21-093AN	
CN1205	088T 78 13938 TN	RCA JACK 1*3 Y/W/R V/A 5105-870-083-98	
CN1207	088T 78 13938 TN	RCA JACK 1*3 Y/W/R V/A 5105-870-083-98	
CN1203	088T 78 13939 JC	RCA JACK 1*3 Y/W/R + S JACK	
CN1203	088T 78 13A39 YG	S JACK + RCA JACK 1*3 Y/W/R RCA-333S-010	
CN1204	088T 302912 S	PHONE JACK 3.5MM 7P BLACK 2SJ1508-001111	
CN1204	088T 302A12 YG	PHONE JACK 3.5MM 7P BLACK	
CN1401	088T 35315F VC	D-SUB 15PIN VERTICAL CONNECTOR	
CN1401	088T 35315FTNA	D-SUB CONN V 15P F (WITH SCREW UNLOCKED)	
TU1102	094GNPSEALL 2X	TUNER NTSC+PAL+SECAM STM-6C3/235	
C6103	067G 3051007CT	EC 10UF/50V KM 5*11MM	
C1105	067G 3051012CT	EC 100UF 10V KM 5X11MM	
C7134	067G 3051012CT	EC 100UF 10V KM 5X11MM	
C7143	067G 3051012CT	EC 100UF 10V KM 5X11MM	
C7162	067G 3051012CT	EC 100UF 10V KM 5X11MM	
C7213	067G 3052214CT	EC 220UF/25V KM 8*11MM	
C7214	067G 3052214CT	EC 220UF/25V KM 8*11MM	
C7213	067G 3052214ET	EC 220UF 25V RGA 8X11MM	
C7214	067G 3052214ET	EC 220UF 25V RGA 8X11MM	
C7129	067G 3152214CT	EC 220UF 25V GF 8*11.5MM	
C1106	067G215D4713KT	/105℃ EC 470UF M 16V KINGNICHI	
C1229	067G215D4713KT	/105℃ EC 470UF M 16V KINGNICHI	
C7127	067G215Y2212KT	LOW ESR EC 220UF 10V 6.3*11MM	
C7126	067G215Y2212KT	LOW ESR EC 220UF 10V 6.3*11MM	
C6143	067G215Y2212KT	LOW ESR EC 220UF 10V 6.3*11MM	
C6116	067G215Y2212KT	LOW ESR EC 220UF 10V 6.3*11MM	
C6103	067T 3051007ET	EC 10UF 50V RGA 5X11 MM	
C6103	067T 3051007KT	EC 10UF/50V PF 5*11MM	
C1105	067T 3051012ET	EC 100UF 10V RGA 5X11MM	
C7162	067T 3051012ET	EC 100UF 10V RGA 5X11MM	
C7143	067T 3051012ET	EC 100UF 10V RGA 5X11MM	
C7134	067T 3051012ET	EC 100UF 10V RGA 5X11MM	
C1105	067T 3051012KT	EC 100UF 10V PF 5X11MM	
C7162	067T 3051012KT	EC 100UF 10V PF 5X11MM	
C7143	067T 3051012KT	EC 100UF 10V PF 5X11MM	
C7134	067T 3051012KT	EC 100UF 10V PF 5X11MM	

英华家电维修资料软件专用 购买QQ:505966338

C7214	067T 3052214KT	EC 220UF 25V PF 8X12MM	
C7213	067T 3052214KT	EC 220UF 25V PF 8X12MM	
C7129	067T 3152214KT	EC 220UF 25V ED 8*12MM	
C6129	067T 5154707CT	EC 47UF 50V GF 6.3*11MM	
C7107	067T215L1014CT	EC 100UF 25V KH 6.3*11MM	
C7127	067T215Y2212CT	EC 220UF 10V GL 6.3X11MM	
C7126	067T215Y2212CT	EC 220UF 10V GL 6.3X11MM	
C6143	067T215Y2212CT	EC 220UF 10V GL 6.3X11MM	
C6116	067T215Y2212CT	EC 220UF 10V GL 6.3X11MM	
CN7503	033G8033 30 FP	WAFER PLUG 30P 1.25MM 60948	
CN7503	033T8033 30 X	CON. V 2*15P M 1.25 SM S1312-30SVA-1R	
U7109	056G 133 30AAC	AZ1117H-ADJ-E1	
U7108	056G 133 30AAC	AZ1117H-ADJ-E1	
U7105	056G 133 30AAC	AZ1117H-ADJ-E1	
U7108	056G 563922	AME1117ACGTZ	
U7109	056G 563922	AME1117ACGTZ	
U7105	056G 563922	AME1117ACGTZ	
U7109	056G 585 10	IC AP1117ELA-ADJ	
U7108	056G 585 10	IC AP1117ELA-ADJ	
U7105	056G 585 10	IC AP1117ELA-ADJ	
U6102	056G 616917	IC TPA3124D2PWPR	
U1601	056G 634 2 1	IC PI5V330SQEX QSOP-16 PERICOM	
ZD1503	056G 662902	IC RCLAMP0502B.TCT SC-75 3L	
U1401	056G1133 34	M24C02-WMN6TP	
U1501	056G1133 34	M24C02-WMN6TP	
U1502	056G1133 34	M24C02-WMN6TP	
U1602	056G1133 34	M24C02-WMN6TP	
U4203	056G113353A	IC M24C32-WMN6T SO-8 ST	MSTARTV-HDCP
U1602	056G1133918	IC AT24C02BN-SH-T 8-SOIC	
U1502	056G1133918	IC AT24C02BN-SH-T 8-SOIC	
U1501	056G1133918	IC AT24C02BN-SH-T 8-SOIC	
U1401	056G1133918	IC AT24C02BN-SH-T 8-SOIC	
U4403	056G1133935	IC MX25L3205DMI-12G SOP-16	
U1201	056T 192901	IC DRV601RTJR QFN-20	
U6101	056T 192901	IC DRV601RTJR QFN-20	
U6103	056T 192901	IC DRV601RTJR QFN-20	
U7106	056T 379907	IC SC4525ASETRT SO-8	
U7103	056T 563952	IC SC4524BSETRT SO-8	
U4401	056T 615902	IC HY5DU281622FTP-5-C TSOPII66	
U1701	056T 623904	IC TS5A3157DCKR SC70	
U1702	056T 623904	IC TS5A3157DCKR SC70	
U1703	056T 623904	IC TS5A3157DCKR SC70	
U1704	056T 623904	IC TS5A3157DCKR SC70	
U1503	056T 634 23	IC TMDS361PAGT TQFP-64	
U4202	056T 643903	IC AP1702EWL-7 SOT23	
U4201	056T1126 62	IC MST9A885GL-LF LQFP-256	
U4203	056T1133933	IC AT24C32CN-SH-T SO8	MSTARTV-HDCP

英华家电维修资料软件专用 购买QQ:505966338

Q1202	057G 417 6	PMBS3906/PHILIPS-SMT(06)	
Q1202	057G 417 13 T	KEC 2N3906S-RTK/PS	
Q1607	057G 417511	MMBT3904	
Q1606	057G 417511	MMBT3904	
Q1605	057G 417511	MMBT3904	
Q1604	057G 417511	MMBT3904	
Q1603	057G 417511	MMBT3904	
Q1602	057G 417511	MMBT3904	
Q1202	057G 417512	MMBT3906	
Q6104	057G 419513	BC847C	
Q6105	057G 419513	BC847C	
Q6106	057G 419513	BC847C	
Q6107	057G 419513	BC847C	
Q7103	057G 419513	BC847C	
Q7108	057G 419513	BC847C	
Q7201	057G 419513	BC847C	
Q7202	057G 419513	BC847C	
Q6102	057G 419513	BC847C	
Q1201	057G 419513	BC847C	
Q1203	057G 419513	BC847C	
Q1503	057G 419513	BC847C	
Q1508	057G 419513	BC847C	
Q1509	057G 419513	BC847C	
Q1510	057G 419513	BC847C	
Q1511	057G 419513	BC847C	
Q1701	057G 419513	BC847C	
Q1701	057G 477900 T	TRA SIG SM BC847C (KEC0) R	
Q1511	057G 477900 T	TRA SIG SM BC847C (KEC0) R	
Q1510	057G 477900 T	TRA SIG SM BC847C (KEC0) R	
Q1509	057G 477900 T	TRA SIG SM BC847C (KEC0) R	
Q1508	057G 477900 T	TRA SIG SM BC847C (KEC0) R	
Q1503	057G 477900 T	TRA SIG SM BC847C (KEC0) R	
Q1203	057G 477900 T	TRA SIG SM BC847C (KEC0) R	
Q1201	057G 477900 T	TRA SIG SM BC847C (KEC0) R	
Q7202	057G 477900 T	TRA SIG SM BC847C (KEC0) R	
Q7201	057G 477900 T	TRA SIG SM BC847C (KEC0) R	
Q7108	057G 477900 T	TRA SIG SM BC847C (KEC0) R	
Q7103	057G 477900 T	TRA SIG SM BC847C (KEC0) R	
Q6107	057G 477900 T	TRA SIG SM BC847C (KEC0) R	
Q6106	057G 477900 T	TRA SIG SM BC847C (KEC0) R	
Q6105	057G 477900 T	TRA SIG SM BC847C (KEC0) R	
Q6104	057G 477900 T	TRA SIG SM BC847C (KEC0) R	
Q6102	057G 477900 T	TRA SIG SM BC847C (KEC0) R	
Q1502	057G 759 2	RK7002FD5T116 SOT-23 BY ROHM	
Q7303	057G 759 2	RK7002FD5T116 SOT-23 BY ROHM	
Q7104	057G 7601PH	TRA SIG SM MUN2211J(ONSE)R	
Q7102	057G 7601PH	TRA SIG SM MUN2211J(ONSE)R	

英华家电维修资料软件专用 购买QQ:505966338

Q6101	057G 7601PH	TRA SIG SM MUN2211J(ONSE)R	
Q6101	057G 7602PH	TRA PDTC114EK SC-59 PHILIPS	
Q7102	057G 7602PH	TRA PDTC114EK SC-59 PHILIPS	
Q7104	057G 7602PH	TRA PDTC114EK SC-59 PHILIPS	
Q1502	057G 763 53	FET 2N7002ESPT 0.3A/60V SOT-23	
Q7303	057G 763 53	FET 2N7002ESPT 0.3A/60V SOT-23	
Q7109	057G 763901	FET SI4835BDY SO-8	
Q7101	057G 763901	FET SI4835BDY SO-8	
Q6103	057G 763901	FET SI4835BDY SO-8	
Q6103	057G 763912	MOSFET SI4835DDY SO-8	
Q7101	057G 763912	MOSFET SI4835DDY SO-8	
Q7109	057G 763912	MOSFET SI4835DDY SO-8	
RP4407	061G 126470 8Y	RST CHIP AR 8P4R 47 OHM +-5% 1/16W	
RP4406	061G 126470 8Y	RST CHIP AR 8P4R 47 OHM +-5% 1/16W	
RP4405	061G 126470 8Y	RST CHIP AR 8P4R 47 OHM +-5% 1/16W	
RP4404	061G 126470 8Y	RST CHIP AR 8P4R 47 OHM +-5% 1/16W	
RP4403	061G 126470 8Y	RST CHIP AR 8P4R 47 OHM +-5% 1/16W	
RP4402	061G 126470 8Y	RST CHIP AR 8P4R 47 OHM +-5% 1/16W	
RP4401	061G 126470 8Y	RST CHIP AR 8P4R 47 OHM +-5% 1/16W	
R1549	061G0402000 T	RST CHIP MAX 0R05 1/16W	
R1550	061G0402000 T	RST CHIP MAX 0R05 1/16W	
R4209	061G0402000 T	RST CHIP MAX 0R05 1/16W	
R4210	061G0402000 T	RST CHIP MAX 0R05 1/16W	
R4216	061G0402000 T	RST CHIP MAX 0R05 1/16W	
R4261	061G0402000 T	RST CHIP MAX 0R05 1/16W	
R7215	061G0402000 T	RST CHIP MAX 0R05 1/16W	
R7303	061G0402000 T	RST CHIP MAX 0R05 1/16W	
R7310	061G0402000 T	RST CHIP MAX 0R05 1/16W	
R7509	061G0402000 T	RST CHIP MAX 0R05 1/16W	
R1548	061G0402000 T	RST CHIP MAX 0R05 1/16W	
R1416	061G0402000 T	RST CHIP MAX 0R05 1/16W	
R1415	061G0402000 T	RST CHIP MAX 0R05 1/16W	
R1246	061G0402000 T	RST CHIP MAX 0R05 1/16W	
R1219	061G0402000 T	RST CHIP MAX 0R05 1/16W	
R1123	061G0402000 T	RST CHIP MAX 0R05 1/16W	
R1116	061G0402000 T	RST CHIP MAX 0R05 1/16W	
R1113	061G0402000 T	RST CHIP MAX 0R05 1/16W	
R1108	061G0402000 T	RST CHIP MAX 0R05 1/16W	
R1107	061G0402000 T	RST CHIP MAX 0R05 1/16W	
R7510	061G0402000 T	RST CHIP MAX 0R05 1/16W	
R7511	061G0402000 T	RST CHIP MAX 0R05 1/16W	
R7523	061G0402000 T	RST CHIP MAX 0R05 1/16W	
R4209	061G0402000 Y	RST CHIP MAX 0R05 1/16W YAGEO	
R4210	061G0402000 Y	RST CHIP MAX 0R05 1/16W YAGEO	
R4216	061G0402000 Y	RST CHIP MAX 0R05 1/16W YAGEO	
R4261	061G0402000 Y	RST CHIP MAX 0R05 1/16W YAGEO	
R7215	061G0402000 Y	RST CHIP MAX 0R05 1/16W YAGEO	

英华家电维修资料软件专用 购买QQ:505966338

R7303	061G0402000	Y	RST CHIP MAX 0R05 1/16W YAGEO
R7310	061G0402000	Y	RST CHIP MAX 0R05 1/16W YAGEO
R7509	061G0402000	Y	RST CHIP MAX 0R05 1/16W YAGEO
R7510	061G0402000	Y	RST CHIP MAX 0R05 1/16W YAGEO
R7511	061G0402000	Y	RST CHIP MAX 0R05 1/16W YAGEO
R7523	061G0402000	Y	RST CHIP MAX 0R05 1/16W YAGEO
R1550	061G0402000	Y	RST CHIP MAX 0R05 1/16W YAGEO
R1107	061G0402000	Y	RST CHIP MAX 0R05 1/16W YAGEO
R1108	061G0402000	Y	RST CHIP MAX 0R05 1/16W YAGEO
R1113	061G0402000	Y	RST CHIP MAX 0R05 1/16W YAGEO
R1116	061G0402000	Y	RST CHIP MAX 0R05 1/16W YAGEO
R1123	061G0402000	Y	RST CHIP MAX 0R05 1/16W YAGEO
R1219	061G0402000	Y	RST CHIP MAX 0R05 1/16W YAGEO
R1246	061G0402000	Y	RST CHIP MAX 0R05 1/16W YAGEO
R1415	061G0402000	Y	RST CHIP MAX 0R05 1/16W YAGEO
R1416	061G0402000	Y	RST CHIP MAX 0R05 1/16W YAGEO
R1548	061G0402000	Y	RST CHIP MAX 0R05 1/16W YAGEO
R1549	061G0402000	Y	RST CHIP MAX 0R05 1/16W YAGEO
R6152	061G0402100	T	RST CHIP 10R 1/16W 5%
R6151	061G0402100	T	RST CHIP 10R 1/16W 5%
R6121	061G0402100	T	RST CHIP 10R 1/16W 5%
R6120	061G0402100	T	RST CHIP 10R 1/16W 5%
R6116	061G0402100	T	RST CHIP 10R 1/16W 5%
R6115	061G0402100	T	RST CHIP 10R 1/16W 5%
R1725	061G0402100	T	RST CHIP 10R 1/16W 5%
R1114	061G0402100	T	RST CHIP 10R 1/16W 5%
R1115	061G0402100	T	RST CHIP 10R 1/16W 5%
R1234	061G0402100	T	RST CHIP 10R 1/16W 5%
R1235	061G0402100	T	RST CHIP 10R 1/16W 5%
R1402	061G0402100	T	RST CHIP 10R 1/16W 5%
R1404	061G0402100	T	RST CHIP 10R 1/16W 5%
R6152	061G0402100	Y	RST CHIPR 10 OHM +-5% 1/16W YAGEO
R6151	061G0402100	Y	RST CHIPR 10 OHM +-5% 1/16W YAGEO
R6121	061G0402100	Y	RST CHIPR 10 OHM +-5% 1/16W YAGEO
R6120	061G0402100	Y	RST CHIPR 10 OHM +-5% 1/16W YAGEO
R6116	061G0402100	Y	RST CHIPR 10 OHM +-5% 1/16W YAGEO
R6115	061G0402100	Y	RST CHIPR 10 OHM +-5% 1/16W YAGEO
R1725	061G0402100	Y	RST CHIPR 10 OHM +-5% 1/16W YAGEO
R1404	061G0402100	Y	RST CHIPR 10 OHM +-5% 1/16W YAGEO
R1402	061G0402100	Y	RST CHIPR 10 OHM +-5% 1/16W YAGEO
R1235	061G0402100	Y	RST CHIPR 10 OHM +-5% 1/16W YAGEO
R1234	061G0402100	Y	RST CHIPR 10 OHM +-5% 1/16W YAGEO
R1115	061G0402100	Y	RST CHIPR 10 OHM +-5% 1/16W YAGEO
R1114	061G0402100	Y	RST CHIPR 10 OHM +-5% 1/16W YAGEO
R1217	061G0402101	T	RST CHIP 100R 1/16W 5%
R1225	061G0402101	T	RST CHIP 100R 1/16W 5%
R1226	061G0402101	T	RST CHIP 100R 1/16W 5%

英华家电维修资料软件专用 购买QQ:505966338

R1421	061G0402101	T	RST CHIP 100R 1/16W 5%	
R1422	061G0402101	T	RST CHIP 100R 1/16W 5%	
R4207	061G0402101	T	RST CHIP 100R 1/16W 5%	
R4414	061G0402101	T	RST CHIP 100R 1/16W 5%	
R4415	061G0402101	T	RST CHIP 100R 1/16W 5%	
R4417	061G0402101	T	RST CHIP 100R 1/16W 5%	
R4421	061G0402101	T	RST CHIP 100R 1/16W 5%	
R4422	061G0402101	T	RST CHIP 100R 1/16W 5%	
R4423	061G0402101	T	RST CHIP 100R 1/16W 5%	
R6108	061G0402101	T	RST CHIP 100R 1/16W 5%	
R6109	061G0402101	T	RST CHIP 100R 1/16W 5%	
R6131	061G0402101	T	RST CHIP 100R 1/16W 5%	
R6132	061G0402101	T	RST CHIP 100R 1/16W 5%	
R7320	061G0402101	T	RST CHIP 100R 1/16W 5%	
R7321	061G0402101	T	RST CHIP 100R 1/16W 5%	
R7322	061G0402101	T	RST CHIP 100R 1/16W 5%	
R7401	061G0402101	T	RST CHIP 100R 1/16W 5%	
R7402	061G0402101	T	RST CHIP 100R 1/16W 5%	
R7404	061G0402101	T	RST CHIP 100R 1/16W 5%	
R7405	061G0402101	T	RST CHIP 100R 1/16W 5%	
R7404	061G0402101	Y	RST CHIPR 100 OHM +-5% 1/16W YAGEO	
R7402	061G0402101	Y	RST CHIPR 100 OHM +-5% 1/16W YAGEO	
R7401	061G0402101	Y	RST CHIPR 100 OHM +-5% 1/16W YAGEO	
R7322	061G0402101	Y	RST CHIPR 100 OHM +-5% 1/16W YAGEO	
R7321	061G0402101	Y	RST CHIPR 100 OHM +-5% 1/16W YAGEO	
R7320	061G0402101	Y	RST CHIPR 100 OHM +-5% 1/16W YAGEO	
R6132	061G0402101	Y	RST CHIPR 100 OHM +-5% 1/16W YAGEO	
R6131	061G0402101	Y	RST CHIPR 100 OHM +-5% 1/16W YAGEO	
R6109	061G0402101	Y	RST CHIPR 100 OHM +-5% 1/16W YAGEO	
R6108	061G0402101	Y	RST CHIPR 100 OHM +-5% 1/16W YAGEO	
R4423	061G0402101	Y	RST CHIPR 100 OHM +-5% 1/16W YAGEO	
R4422	061G0402101	Y	RST CHIPR 100 OHM +-5% 1/16W YAGEO	
R4421	061G0402101	Y	RST CHIPR 100 OHM +-5% 1/16W YAGEO	
R4417	061G0402101	Y	RST CHIPR 100 OHM +-5% 1/16W YAGEO	
R4415	061G0402101	Y	RST CHIPR 100 OHM +-5% 1/16W YAGEO	
R4414	061G0402101	Y	RST CHIPR 100 OHM +-5% 1/16W YAGEO	
R4207	061G0402101	Y	RST CHIPR 100 OHM +-5% 1/16W YAGEO	
R1422	061G0402101	Y	RST CHIPR 100 OHM +-5% 1/16W YAGEO	
R1421	061G0402101	Y	RST CHIPR 100 OHM +-5% 1/16W YAGEO	
R1226	061G0402101	Y	RST CHIPR 100 OHM +-5% 1/16W YAGEO	
R1225	061G0402101	Y	RST CHIPR 100 OHM +-5% 1/16W YAGEO	
R1217	061G0402101	Y	RST CHIPR 100 OHM +-5% 1/16W YAGEO	
R7405	061G0402101	Y	RST CHIPR 100 OHM +-5% 1/16W YAGEO	
R7201	061G0402102	T	RST CHIP 1K 1/16W 5%	
R4225	061G0402102	T	RST CHIP 1K 1/16W 5%	
R4224	061G0402102	T	RST CHIP 1K 1/16W 5%	
R4223	061G0402102	T	RST CHIP 1K 1/16W 5%	

英华家电维修资料软件专用 购买QQ:505966338

R1724	061G0402102 T	RST CHIP 1K 1/16W 5%	
R1723	061G0402102 T	RST CHIP 1K 1/16W 5%	
R1526	061G0402102 T	RST CHIP 1K 1/16W 5%	
R1512	061G0402102 T	RST CHIP 1K 1/16W 5%	
R1509	061G0402102 T	RST CHIP 1K 1/16W 5%	
R1504	061G0402102 T	RST CHIP 1K 1/16W 5%	
R7201	061G0402102 Y	RST CHIPR 1KOHM +-5% 1/16W YAGEO	
R4225	061G0402102 Y	RST CHIPR 1KOHM +-5% 1/16W YAGEO	
R4224	061G0402102 Y	RST CHIPR 1KOHM +-5% 1/16W YAGEO	
R4223	061G0402102 Y	RST CHIPR 1KOHM +-5% 1/16W YAGEO	
R1724	061G0402102 Y	RST CHIPR 1KOHM +-5% 1/16W YAGEO	
R1723	061G0402102 Y	RST CHIPR 1KOHM +-5% 1/16W YAGEO	
R1526	061G0402102 Y	RST CHIPR 1KOHM +-5% 1/16W YAGEO	
R1512	061G0402102 Y	RST CHIPR 1KOHM +-5% 1/16W YAGEO	
R1509	061G0402102 Y	RST CHIPR 1KOHM +-5% 1/16W YAGEO	
R1504	061G0402102 Y	RST CHIPR 1KOHM +-5% 1/16W YAGEO	
R1117	061G0402102 JT	RST CHIP 1K 1/16W 5% TZAI YUAN	
R1117	061G0402102 JY	RST CHIPR 1KOHM +-5% 1/16W YAGEO	
R1230	061G0402103 T	RST CHIP 10K 1/16W 5%	
R1247	061G0402103 T	RST CHIP 10K 1/16W 5%	
R1248	061G0402103 T	RST CHIP 10K 1/16W 5%	
R4269	061G0402103 T	RST CHIP 10K 1/16W 5%	
R4270	061G0402103 T	RST CHIP 10K 1/16W 5%	
R4271	061G0402103 T	RST CHIP 10K 1/16W 5%	
R4272	061G0402103 T	RST CHIP 10K 1/16W 5%	
R4275	061G0402103 T	RST CHIP 10K 1/16W 5%	
R4278	061G0402103 T	RST CHIP 10K 1/16W 5%	
R4281	061G0402103 T	RST CHIP 10K 1/16W 5%	
R4299	061G0402103 T	RST CHIP 10K 1/16W 5%	
R4302	061G0402103 T	RST CHIP 10K 1/16W 5%	
R4307	061G0402103 T	RST CHIP 10K 1/16W 5%	
R4310	061G0402103 T	RST CHIP 10K 1/16W 5%	
R6110	061G0402103 T	RST CHIP 10K 1/16W 5%	
R4122	061G0402103 T	RST CHIP 10K 1/16W 5%	
R4127	061G0402103 T	RST CHIP 10K 1/16W 5%	
R4128	061G0402103 T	RST CHIP 10K 1/16W 5%	
R4221	061G0402103 T	RST CHIP 10K 1/16W 5%	
R4222	061G0402103 T	RST CHIP 10K 1/16W 5%	
R4232	061G0402103 T	RST CHIP 10K 1/16W 5%	
R4234	061G0402103 T	RST CHIP 10K 1/16W 5%	
R4235	061G0402103 T	RST CHIP 10K 1/16W 5%	
R4237	061G0402103 T	RST CHIP 10K 1/16W 5%	
R4252	061G0402103 T	RST CHIP 10K 1/16W 5%	
R4256	061G0402103 T	RST CHIP 10K 1/16W 5%	
R4260	061G0402103 T	RST CHIP 10K 1/16W 5%	
R1715	061G0402103 T	RST CHIP 10K 1/16W 5%	
R1713	061G0402103 T	RST CHIP 10K 1/16W 5%	

英华家电维修资料软件专用 购买QQ:505966338

R1711	061G0402103 T	RST CHIP 10K 1/16W 5%	
R1709	061G0402103 T	RST CHIP 10K 1/16W 5%	
R1707	061G0402103 T	RST CHIP 10K 1/16W 5%	
R1705	061G0402103 T	RST CHIP 10K 1/16W 5%	
R1627	061G0402103 T	RST CHIP 10K 1/16W 5%	
R1525	061G0402103 T	RST CHIP 10K 1/16W 5%	
R1521	061G0402103 T	RST CHIP 10K 1/16W 5%	
R1518	061G0402103 T	RST CHIP 10K 1/16W 5%	
R1430	061G0402103 T	RST CHIP 10K 1/16W 5%	
R1405	061G0402103 T	RST CHIP 10K 1/16W 5%	
R6135	061G0402103 T	RST CHIP 10K 1/16W 5%	
R6136	061G0402103 T	RST CHIP 10K 1/16W 5%	
R6142	061G0402103 T	RST CHIP 10K 1/16W 5%	
R6143	061G0402103 T	RST CHIP 10K 1/16W 5%	
R6146	061G0402103 T	RST CHIP 10K 1/16W 5%	
R4121	061G0402103 T	RST CHIP 10K 1/16W 5%	
R1734	061G0402103 T	RST CHIP 10K 1/16W 5%	
R1733	061G0402103 T	RST CHIP 10K 1/16W 5%	
R1729	061G0402103 T	RST CHIP 10K 1/16W 5%	
R1728	061G0402103 T	RST CHIP 10K 1/16W 5%	
R1720	061G0402103 T	RST CHIP 10K 1/16W 5%	
R1718	061G0402103 T	RST CHIP 10K 1/16W 5%	
R1713	061G0402103 Y	RST CHIPR 10KOHM +-5% 1/16W YAGEO	
R1715	061G0402103 Y	RST CHIPR 10KOHM +-5% 1/16W YAGEO	
R1718	061G0402103 Y	RST CHIPR 10KOHM +-5% 1/16W YAGEO	
R1720	061G0402103 Y	RST CHIPR 10KOHM +-5% 1/16W YAGEO	
R1728	061G0402103 Y	RST CHIPR 10KOHM +-5% 1/16W YAGEO	
R1729	061G0402103 Y	RST CHIPR 10KOHM +-5% 1/16W YAGEO	
R1733	061G0402103 Y	RST CHIPR 10KOHM +-5% 1/16W YAGEO	
R1734	061G0402103 Y	RST CHIPR 10KOHM +-5% 1/16W YAGEO	
R4121	061G0402103 Y	RST CHIPR 10KOHM +-5% 1/16W YAGEO	
R4122	061G0402103 Y	RST CHIPR 10KOHM +-5% 1/16W YAGEO	
R4127	061G0402103 Y	RST CHIPR 10KOHM +-5% 1/16W YAGEO	
R4128	061G0402103 Y	RST CHIPR 10KOHM +-5% 1/16W YAGEO	
R1711	061G0402103 Y	RST CHIPR 10KOHM +-5% 1/16W YAGEO	
R1230	061G0402103 Y	RST CHIPR 10KOHM +-5% 1/16W YAGEO	
R1247	061G0402103 Y	RST CHIPR 10KOHM +-5% 1/16W YAGEO	
R1248	061G0402103 Y	RST CHIPR 10KOHM +-5% 1/16W YAGEO	
R1405	061G0402103 Y	RST CHIPR 10KOHM +-5% 1/16W YAGEO	
R1430	061G0402103 Y	RST CHIPR 10KOHM +-5% 1/16W YAGEO	
R1518	061G0402103 Y	RST CHIPR 10KOHM +-5% 1/16W YAGEO	
R1521	061G0402103 Y	RST CHIPR 10KOHM +-5% 1/16W YAGEO	
R1525	061G0402103 Y	RST CHIPR 10KOHM +-5% 1/16W YAGEO	
R1627	061G0402103 Y	RST CHIPR 10KOHM +-5% 1/16W YAGEO	
R1705	061G0402103 Y	RST CHIPR 10KOHM +-5% 1/16W YAGEO	
R1707	061G0402103 Y	RST CHIPR 10KOHM +-5% 1/16W YAGEO	
R1709	061G0402103 Y	RST CHIPR 10KOHM +-5% 1/16W YAGEO	

英华家电维修资料软件专用 购买QQ:505966338

R4221	061G0402103 Y	RST CHIPR 10KOHM +-5% 1/16W YAGEO	
R4278	061G0402103 Y	RST CHIPR 10KOHM +-5% 1/16W YAGEO	
R4281	061G0402103 Y	RST CHIPR 10KOHM +-5% 1/16W YAGEO	
R4299	061G0402103 Y	RST CHIPR 10KOHM +-5% 1/16W YAGEO	
R4302	061G0402103 Y	RST CHIPR 10KOHM +-5% 1/16W YAGEO	
R4307	061G0402103 Y	RST CHIPR 10KOHM +-5% 1/16W YAGEO	
R4310	061G0402103 Y	RST CHIPR 10KOHM +-5% 1/16W YAGEO	
R6110	061G0402103 Y	RST CHIPR 10KOHM +-5% 1/16W YAGEO	
R6135	061G0402103 Y	RST CHIPR 10KOHM +-5% 1/16W YAGEO	
R6136	061G0402103 Y	RST CHIPR 10KOHM +-5% 1/16W YAGEO	
R6142	061G0402103 Y	RST CHIPR 10KOHM +-5% 1/16W YAGEO	
R6143	061G0402103 Y	RST CHIPR 10KOHM +-5% 1/16W YAGEO	
R6146	061G0402103 Y	RST CHIPR 10KOHM +-5% 1/16W YAGEO	
R4275	061G0402103 Y	RST CHIPR 10KOHM +-5% 1/16W YAGEO	
R4222	061G0402103 Y	RST CHIPR 10KOHM +-5% 1/16W YAGEO	
R4232	061G0402103 Y	RST CHIPR 10KOHM +-5% 1/16W YAGEO	
R4234	061G0402103 Y	RST CHIPR 10KOHM +-5% 1/16W YAGEO	
R4235	061G0402103 Y	RST CHIPR 10KOHM +-5% 1/16W YAGEO	
R4237	061G0402103 Y	RST CHIPR 10KOHM +-5% 1/16W YAGEO	
R4252	061G0402103 Y	RST CHIPR 10KOHM +-5% 1/16W YAGEO	
R4256	061G0402103 Y	RST CHIPR 10KOHM +-5% 1/16W YAGEO	
R4260	061G0402103 Y	RST CHIPR 10KOHM +-5% 1/16W YAGEO	
R4269	061G0402103 Y	RST CHIPR 10KOHM +-5% 1/16W YAGEO	
R4270	061G0402103 Y	RST CHIPR 10KOHM +-5% 1/16W YAGEO	
R4271	061G0402103 Y	RST CHIPR 10KOHM +-5% 1/16W YAGEO	
R4272	061G0402103 Y	RST CHIPR 10KOHM +-5% 1/16W YAGEO	
R1124	061G0402103 JT	RST CHIP 10K 1/16W 5% TZAI YUAN	
R1124	061G0402103 JY	RST CHIPR 10KOHM +-5% 1/16W YAGEO	
R1240	061G0402104 T	RST CHIP 100K 1/16W 5%	
R1241	061G0402104 T	RST CHIP 100K 1/16W 5%	
R4287	061G0402104 T	RST CHIP 100K 1/16W 5%	
R1240	061G0402104 Y	RST CHIPR 100KOHM +-5% 1/16W YAGEO	
R1241	061G0402104 Y	RST CHIPR 100KOHM +-5% 1/16W YAGEO	
R4287	061G0402104 Y	RST CHIPR 100KOHM +-5% 1/16W YAGEO	
R1735	061G0402123 T	RST CHIP 12K 1/16W 5%	
R1706	061G0402123 T	RST CHIP 12K 1/16W 5%	
R1708	061G0402123 T	RST CHIP 12K 1/16W 5%	
R1710	061G0402123 T	RST CHIP 12K 1/16W 5%	
R1712	061G0402123 T	RST CHIP 12K 1/16W 5%	
R1714	061G0402123 T	RST CHIP 12K 1/16W 5%	
R1732	061G0402123 T	RST CHIP 12K 1/16W 5%	
R1731	061G0402123 T	RST CHIP 12K 1/16W 5%	
R1730	061G0402123 T	RST CHIP 12K 1/16W 5%	
R1719	061G0402123 T	RST CHIP 12K 1/16W 5%	
R1717	061G0402123 T	RST CHIP 12K 1/16W 5%	
R1716	061G0402123 T	RST CHIP 12K 1/16W 5%	
R1735	061G0402123 Y	RST CHIP 12K 1/16W 5%	

英华家电维修资料软件专用 购买QQ:505966338

R1732	061G0402123 Y	RST CHIP 12K 1/16W 5%	
R1731	061G0402123 Y	RST CHIP 12K 1/16W 5%	
R1730	061G0402123 Y	RST CHIP 12K 1/16W 5%	
R1719	061G0402123 Y	RST CHIP 12K 1/16W 5%	
R1717	061G0402123 Y	RST CHIP 12K 1/16W 5%	
R1716	061G0402123 Y	RST CHIP 12K 1/16W 5%	
R1714	061G0402123 Y	RST CHIP 12K 1/16W 5%	
R1712	061G0402123 Y	RST CHIP 12K 1/16W 5%	
R1710	061G0402123 Y	RST CHIP 12K 1/16W 5%	
R1708	061G0402123 Y	RST CHIP 12K 1/16W 5%	
R1706	061G0402123 Y	RST CHIP 12K 1/16W 5%	
R4410	061G04021500FT	RST CHIP 150R 1/16W 1%	
R4410	061G04021500FY	RST CHIP 150R 1/16W 1%	
R1221	061G0402153 T	RST CHIP 15K 1/16W 5%	
R1807	061G0402153 T	RST CHIP 15K 1/16W 5%	
R1808	061G0402153 T	RST CHIP 15K 1/16W 5%	
R4279	061G0402153 T	RST CHIP 15K 1/16W 5%	
R4280	061G0402153 T	RST CHIP 15K 1/16W 5%	
R1221	061G0402153 Y	RST CHIP 15K 1/16W 5%	
R1807	061G0402153 Y	RST CHIP 15K 1/16W 5%	
R1808	061G0402153 Y	RST CHIP 15K 1/16W 5%	
R4279	061G0402153 Y	RST CHIP 15K 1/16W 5%	
R4280	061G0402153 Y	RST CHIP 15K 1/16W 5%	
R1528	061G04022009FT	RST CHIP R 20OHM +-1% 1/16W	
R1527	061G04022009FT	RST CHIP R 20OHM +-1% 1/16W	
R1523	061G04022009FT	RST CHIP R 20OHM +-1% 1/16W	
R1522	061G04022009FT	RST CHIP R 20OHM +-1% 1/16W	
R1519	061G04022009FT	RST CHIP R 20OHM +-1% 1/16W	
R1515	061G04022009FT	RST CHIP R 20OHM +-1% 1/16W	
R1514	061G04022009FT	RST CHIP R 20OHM +-1% 1/16W	
R1513	061G04022009FT	RST CHIP R 20OHM +-1% 1/16W	
R1528	061G04022009FY	RST CHIP R 20OHM +-1% 1/16W	
R1527	061G04022009FY	RST CHIP R 20OHM +-1% 1/16W	
R1523	061G04022009FY	RST CHIP R 20OHM +-1% 1/16W	
R1522	061G04022009FY	RST CHIP R 20OHM +-1% 1/16W	
R1519	061G04022009FY	RST CHIP R 20OHM +-1% 1/16W	
R1515	061G04022009FY	RST CHIP R 20OHM +-1% 1/16W	
R1514	061G04022009FY	RST CHIP R 20OHM +-1% 1/16W	
R1513	061G04022009FY	RST CHIP R 20OHM +-1% 1/16W	
R1501	061G0402202 T	RST CHIP 2K 1/16W 5%	
R1502	061G0402202 T	RST CHIP 2K 1/16W 5%	
R1502	061G0402202 Y	RST CHIPR 2KOHM +-5% 1/16W YAGEO	
R1501	061G0402202 Y	RST CHIPR 2KOHM +-5% 1/16W YAGEO	
R4411	061G0402220 T	RST CHIP 22R 1/16W 5%	
R4405	061G0402220 T	RST CHIP 22R 1/16W 5%	
R4404	061G0402220 T	RST CHIP 22R 1/16W 5%	
R4403	061G0402220 T	RST CHIP 22R 1/16W 5%	

英华家电维修资料软件专用 购买QQ:505966338

R4273	061G0402220 T	RST CHIP 22R 1/16W 5%	
R4220	061G0402220 T	RST CHIP 22R 1/16W 5%	
R4219	061G0402220 T	RST CHIP 22R 1/16W 5%	
R4218	061G0402220 T	RST CHIP 22R 1/16W 5%	
R4217	061G0402220 T	RST CHIP 22R 1/16W 5%	
R1603	061G0402220 T	RST CHIP 22R 1/16W 5%	
R1602	061G0402220 T	RST CHIP 22R 1/16W 5%	
R1508	061G0402220 T	RST CHIP 22R 1/16W 5%	
R1507	061G0402220 T	RST CHIP 22R 1/16W 5%	
R1505	061G0402220 T	RST CHIP 22R 1/16W 5%	
R1503	061G0402220 T	RST CHIP 22R 1/16W 5%	
R4411	061G0402220 Y	RST CHIP 22R 1/16W 5%	
R4405	061G0402220 Y	RST CHIP 22R 1/16W 5%	
R4404	061G0402220 Y	RST CHIP 22R 1/16W 5%	
R4403	061G0402220 Y	RST CHIP 22R 1/16W 5%	
R4273	061G0402220 Y	RST CHIP 22R 1/16W 5%	
R4220	061G0402220 Y	RST CHIP 22R 1/16W 5%	
R4219	061G0402220 Y	RST CHIP 22R 1/16W 5%	
R4218	061G0402220 Y	RST CHIP 22R 1/16W 5%	
R4217	061G0402220 Y	RST CHIP 22R 1/16W 5%	
R1603	061G0402220 Y	RST CHIP 22R 1/16W 5%	
R1602	061G0402220 Y	RST CHIP 22R 1/16W 5%	
R1508	061G0402220 Y	RST CHIP 22R 1/16W 5%	
R1507	061G0402220 Y	RST CHIP 22R 1/16W 5%	
R1505	061G0402220 Y	RST CHIP 22R 1/16W 5%	
R1503	061G0402220 Y	RST CHIP 22R 1/16W 5%	
R1750	061G0402222 T	RST CHIP 2K2 1/16W 5%	
R1749	061G0402222 T	RST CHIP 2K2 1/16W 5%	
R1748	061G0402222 T	RST CHIP 2K2 1/16W 5%	
R1747	061G0402222 T	RST CHIP 2K2 1/16W 5%	
R1547	061G0402222 T	RST CHIP 2K2 1/16W 5%	
R1546	061G0402222 T	RST CHIP 2K2 1/16W 5%	
R1420	061G0402222 T	RST CHIP 2K2 1/16W 5%	
R1419	061G0402222 T	RST CHIP 2K2 1/16W 5%	
R1419	061G0402222 Y	RST CHIPR 2.2KOHM +-5% 1/16W YAGEO	
R1420	061G0402222 Y	RST CHIPR 2.2KOHM +-5% 1/16W YAGEO	
R1546	061G0402222 Y	RST CHIPR 2.2KOHM +-5% 1/16W YAGEO	
R1547	061G0402222 Y	RST CHIPR 2.2KOHM +-5% 1/16W YAGEO	
R1747	061G0402222 Y	RST CHIPR 2.2KOHM +-5% 1/16W YAGEO	
R1748	061G0402222 Y	RST CHIPR 2.2KOHM +-5% 1/16W YAGEO	
R1749	061G0402222 Y	RST CHIPR 2.2KOHM +-5% 1/16W YAGEO	
R1750	061G0402222 Y	RST CHIPR 2.2KOHM +-5% 1/16W YAGEO	
R6138	061G0402223 T	RST CHIP 22K 1/16W 5%	
R6137	061G0402223 T	RST CHIP 22K 1/16W 5%	
R6134	061G0402223 T	RST CHIP 22K 1/16W 5%	
R6133	061G0402223 T	RST CHIP 22K 1/16W 5%	
R1628	061G0402223 T	RST CHIP 22K 1/16W 5%	

英华家电维修资料软件专用 购买QQ:505966338

R1561	061G0402223 T	RST CHIP 22K 1/16W 5%	
R1560	061G0402223 T	RST CHIP 22K 1/16W 5%	
R1229	061G0402223 T	RST CHIP 22K 1/16W 5%	
R1228	061G0402223 T	RST CHIP 22K 1/16W 5%	
R6138	061G0402223 Y	RST CHIPR 22KOHM +-5% 1/16W YAGEO	
R6137	061G0402223 Y	RST CHIPR 22KOHM +-5% 1/16W YAGEO	
R6134	061G0402223 Y	RST CHIPR 22KOHM +-5% 1/16W YAGEO	
R6133	061G0402223 Y	RST CHIPR 22KOHM +-5% 1/16W YAGEO	
R1628	061G0402223 Y	RST CHIPR 22KOHM +-5% 1/16W YAGEO	
R1561	061G0402223 Y	RST CHIPR 22KOHM +-5% 1/16W YAGEO	
R1560	061G0402223 Y	RST CHIPR 22KOHM +-5% 1/16W YAGEO	
R1229	061G0402223 Y	RST CHIPR 22KOHM +-5% 1/16W YAGEO	
R1228	061G0402223 Y	RST CHIPR 22KOHM +-5% 1/16W YAGEO	
R7203	061G0402223 JT	RST CHIP 22K 1/16W 5% TZAI YUAN	
R7203	061G0402223 JY	RST CHIPR 22KOHM +-5% 1/16W YAGEO	
R1401	061G0402272 T	RST CHIP 2K7 1/16W 5%	
R1403	061G0402272 T	RST CHIP 2K7 1/16W 5%	
R7513	061G0402272 T	RST CHIP 2K7 1/16W 5%	
R7513	061G0402272 Y	RST CHIPR 2.7KOHM +-5% 1/16W YAGEO	
R1403	061G0402272 Y	RST CHIPR 2.7KOHM +-5% 1/16W YAGEO	
R1401	061G0402272 Y	RST CHIPR 2.7KOHM +-5% 1/16W YAGEO	
R4255	061G0402273 T	RST CHIP 27K 1/16W 5%	
R4255	061G0402273 Y	RST CHIP 27K 1/16W 5%	
R4227	061G04023301FT	RST CHIP 3K3 1/16W 1%	
R4227	061G04023301FY	RST CHIP 3K3 1/16W 1%	
R6150	061G0402333 T	RST CHIP 33K 1/16W 5%	
R6149	061G0402333 T	RST CHIP 33K 1/16W 5%	
R6114	061G0402333 T	RST CHIP 33K 1/16W 5%	
R6113	061G0402333 T	RST CHIP 33K 1/16W 5%	
R4276	061G0402333 T	RST CHIP 33K 1/16W 5%	
R4262	061G0402333 T	RST CHIP 33K 1/16W 5%	
R4249	061G0402333 T	RST CHIP 33K 1/16W 5%	
R4247	061G0402333 T	RST CHIP 33K 1/16W 5%	
R1239	061G0402333 T	RST CHIP 33K 1/16W 5%	
R1238	061G0402333 T	RST CHIP 33K 1/16W 5%	
R1237	061G0402333 T	RST CHIP 33K 1/16W 5%	
R1236	061G0402333 T	RST CHIP 33K 1/16W 5%	
R1236	061G0402333 Y	RST CHIPR 33KOHM +-5% 1/16W YAGEO	
R1237	061G0402333 Y	RST CHIPR 33KOHM +-5% 1/16W YAGEO	
R1238	061G0402333 Y	RST CHIPR 33KOHM +-5% 1/16W YAGEO	
R1239	061G0402333 Y	RST CHIPR 33KOHM +-5% 1/16W YAGEO	
R4247	061G0402333 Y	RST CHIPR 33KOHM +-5% 1/16W YAGEO	
R4249	061G0402333 Y	RST CHIPR 33KOHM +-5% 1/16W YAGEO	
R4262	061G0402333 Y	RST CHIPR 33KOHM +-5% 1/16W YAGEO	
R4276	061G0402333 Y	RST CHIPR 33KOHM +-5% 1/16W YAGEO	
R6113	061G0402333 Y	RST CHIPR 33KOHM +-5% 1/16W YAGEO	
R6114	061G0402333 Y	RST CHIPR 33KOHM +-5% 1/16W YAGEO	

英华家电维修资料软件专用 购买QQ:505966338

R6149	061G0402333 Y	RST CHIPR 33KOHM +-5% 1/16W YAGEO	
R6150	061G0402333 Y	RST CHIPR 33KOHM +-5% 1/16W YAGEO	
R4208	061G04023900FT	RST CHIP 390R 1/16W 1%	
R4208	061G04023900FY	RST CHIPR 390 OHM +-1% 1/16W YAGEO	
R1220	061G0402393 T	RST CHIP 39K 1/16W 5%	
R1220	061G0402393 Y	RST CHIP 39K 1/16W 5%	
R4284	061G04024300FT	RST CHIP 430R 1/16W 1%	
R4284	061G04024300FY	RST CHIP 430R 1/16W 1%	
R1427	061G0402470 T	RST CHIP 47R 1/16W 5%	
R1428	061G0402470 T	RST CHIP 47R 1/16W 5%	
R4239	061G0402470 T	RST CHIP 47R 1/16W 5%	
R4240	061G0402470 T	RST CHIP 47R 1/16W 5%	
R4241	061G0402470 T	RST CHIP 47R 1/16W 5%	
R4242	061G0402470 T	RST CHIP 47R 1/16W 5%	
R4243	061G0402470 T	RST CHIP 47R 1/16W 5%	
R4245	061G0402470 T	RST CHIP 47R 1/16W 5%	
R4246	061G0402470 T	RST CHIP 47R 1/16W 5%	
R4248	061G0402470 T	RST CHIP 47R 1/16W 5%	
R4254	061G0402470 T	RST CHIP 47R 1/16W 5%	
R1426	061G0402470 T	RST CHIP 47R 1/16W 5%	
R1250	061G0402470 T	RST CHIP 47R 1/16W 5%	
R1245	061G0402470 T	RST CHIP 47R 1/16W 5%	
R1244	061G0402470 T	RST CHIP 47R 1/16W 5%	
R1215	061G0402470 T	RST CHIP 47R 1/16W 5%	
R1213	061G0402470 T	RST CHIP 47R 1/16W 5%	
R1212	061G0402470 T	RST CHIP 47R 1/16W 5%	
R1211	061G0402470 T	RST CHIP 47R 1/16W 5%	
R1206	061G0402470 T	RST CHIP 47R 1/16W 5%	
R1205	061G0402470 T	RST CHIP 47R 1/16W 5%	
R1204	061G0402470 T	RST CHIP 47R 1/16W 5%	
R1106	061G0402470 T	RST CHIP 47R 1/16W 5%	
R7319	061G0402470 T	RST CHIP 47R 1/16W 5%	
R7214	061G0402470 T	RST CHIP 47R 1/16W 5%	
R4309	061G0402470 T	RST CHIP 47R 1/16W 5%	
R4306	061G0402470 T	RST CHIP 47R 1/16W 5%	
R4304	061G0402470 T	RST CHIP 47R 1/16W 5%	
R4301	061G0402470 T	RST CHIP 47R 1/16W 5%	
R4282	061G0402470 T	RST CHIP 47R 1/16W 5%	
R4277	061G0402470 T	RST CHIP 47R 1/16W 5%	
R4258	061G0402470 T	RST CHIP 47R 1/16W 5%	
R4263	061G0402470 T	RST CHIP 47R 1/16W 5%	
R4264	061G0402470 T	RST CHIP 47R 1/16W 5%	
R4265	061G0402470 T	RST CHIP 47R 1/16W 5%	
R4266	061G0402470 T	RST CHIP 47R 1/16W 5%	
R4267	061G0402470 T	RST CHIP 47R 1/16W 5%	
R4268	061G0402470 T	RST CHIP 47R 1/16W 5%	
R4274	061G0402470 T	RST CHIP 47R 1/16W 5%	

英华家电维修资料软件专用 购买QQ:505966338

R1245	061G0402470 Y	RST CHIP 47R 1/16W 5%	
R1244	061G0402470 Y	RST CHIP 47R 1/16W 5%	
R1215	061G0402470 Y	RST CHIP 47R 1/16W 5%	
R1213	061G0402470 Y	RST CHIP 47R 1/16W 5%	
R1212	061G0402470 Y	RST CHIP 47R 1/16W 5%	
R1211	061G0402470 Y	RST CHIP 47R 1/16W 5%	
R1206	061G0402470 Y	RST CHIP 47R 1/16W 5%	
R1205	061G0402470 Y	RST CHIP 47R 1/16W 5%	
R1204	061G0402470 Y	RST CHIP 47R 1/16W 5%	
R1106	061G0402470 Y	RST CHIP 47R 1/16W 5%	
R4254	061G0402470 Y	RST CHIP 47R 1/16W 5%	
R4248	061G0402470 Y	RST CHIP 47R 1/16W 5%	
R4246	061G0402470 Y	RST CHIP 47R 1/16W 5%	
R4245	061G0402470 Y	RST CHIP 47R 1/16W 5%	
R4243	061G0402470 Y	RST CHIP 47R 1/16W 5%	
R4242	061G0402470 Y	RST CHIP 47R 1/16W 5%	
R4241	061G0402470 Y	RST CHIP 47R 1/16W 5%	
R4240	061G0402470 Y	RST CHIP 47R 1/16W 5%	
R4239	061G0402470 Y	RST CHIP 47R 1/16W 5%	
R1428	061G0402470 Y	RST CHIP 47R 1/16W 5%	
R1427	061G0402470 Y	RST CHIP 47R 1/16W 5%	
R1426	061G0402470 Y	RST CHIP 47R 1/16W 5%	
R1250	061G0402470 Y	RST CHIP 47R 1/16W 5%	
R7319	061G0402470 Y	RST CHIP 47R 1/16W 5%	
R4265	061G0402470 Y	RST CHIP 47R 1/16W 5%	
R4258	061G0402470 Y	RST CHIP 47R 1/16W 5%	
R4264	061G0402470 Y	RST CHIP 47R 1/16W 5%	
R4263	061G0402470 Y	RST CHIP 47R 1/16W 5%	
R7214	061G0402470 Y	RST CHIP 47R 1/16W 5%	
R4309	061G0402470 Y	RST CHIP 47R 1/16W 5%	
R4306	061G0402470 Y	RST CHIP 47R 1/16W 5%	
R4304	061G0402470 Y	RST CHIP 47R 1/16W 5%	
R4266	061G0402470 Y	RST CHIP 47R 1/16W 5%	
R4267	061G0402470 Y	RST CHIP 47R 1/16W 5%	
R4268	061G0402470 Y	RST CHIP 47R 1/16W 5%	
R4274	061G0402470 Y	RST CHIP 47R 1/16W 5%	
R4277	061G0402470 Y	RST CHIP 47R 1/16W 5%	
R4282	061G0402470 Y	RST CHIP 47R 1/16W 5%	
R4301	061G0402470 Y	RST CHIP 47R 1/16W 5%	
R4283	061G04024700FT	RST CHIP 470R 1/16W 1%	
R4283	061G04024700FY	RST CHIP 470R 1/16W 1%	
R1207	061G0402471 T	RST CHIP 470R 1/16W 5%	
R1429	061G0402471 T	RST CHIP 470R 1/16W 5%	
R1218	061G0402471 T	RST CHIP 470R 1/16W 5%	
R1214	061G0402471 T	RST CHIP 470R 1/16W 5%	
R1207	061G0402471 Y	RST CHIPR 470 OHM +-5% 1/16W YAGEO	
R1214	061G0402471 Y	RST CHIPR 470 OHM +-5% 1/16W YAGEO	

英华家电维修资料软件专用 购买QQ:505966338

R1218	061G0402471	Y	RST CHIPR 470 OHM +-5% 1/16W YAGEO
R1429	061G0402471	Y	RST CHIPR 470 OHM +-5% 1/16W YAGEO
R4244	061G0402472	T	RST CHIP 4K7 1/16W 5%
R4259	061G0402472	T	RST CHIP 4K7 1/16W 5%
R7217	061G0402472	T	RST CHIP 4K7 1/16W 5%
R1626	061G0402472	T	RST CHIP 4K7 1/16W 5%
R1625	061G0402472	T	RST CHIP 4K7 1/16W 5%
R1542	061G0402472	T	RST CHIP 4K7 1/16W 5%
R1541	061G0402472	T	RST CHIP 4K7 1/16W 5%
R1540	061G0402472	T	RST CHIP 4K7 1/16W 5%
R1524	061G0402472	T	RST CHIP 4K7 1/16W 5%
R1520	061G0402472	T	RST CHIP 4K7 1/16W 5%
R1517	061G0402472	T	RST CHIP 4K7 1/16W 5%
R1516	061G0402472	T	RST CHIP 4K7 1/16W 5%
R1506	061G0402472	T	RST CHIP 4K7 1/16W 5%
R7217	061G0402472	Y	RST CHIPR 4.7KOHM +-5% 1/16W YAGEO
R4259	061G0402472	Y	RST CHIPR 4.7KOHM +-5% 1/16W YAGEO
R4244	061G0402472	Y	RST CHIPR 4.7KOHM +-5% 1/16W YAGEO
R1626	061G0402472	Y	RST CHIPR 4.7KOHM +-5% 1/16W YAGEO
R1625	061G0402472	Y	RST CHIPR 4.7KOHM +-5% 1/16W YAGEO
R1542	061G0402472	Y	RST CHIPR 4.7KOHM +-5% 1/16W YAGEO
R1541	061G0402472	Y	RST CHIPR 4.7KOHM +-5% 1/16W YAGEO
R1506	061G0402472	Y	RST CHIPR 4.7KOHM +-5% 1/16W YAGEO
R1516	061G0402472	Y	RST CHIPR 4.7KOHM +-5% 1/16W YAGEO
R1517	061G0402472	Y	RST CHIPR 4.7KOHM +-5% 1/16W YAGEO
R1540	061G0402472	Y	RST CHIPR 4.7KOHM +-5% 1/16W YAGEO
R1524	061G0402472	Y	RST CHIPR 4.7KOHM +-5% 1/16W YAGEO
R1520	061G0402472	Y	RST CHIPR 4.7KOHM +-5% 1/16W YAGEO
R6140	061G0402473	T	RST CHIP 47K 1/16W 5%
R6144	061G0402473	T	RST CHIP 47K 1/16W 5%
R6145	061G0402473	T	RST CHIP 47K 1/16W 5%
R6139	061G0402473	T	RST CHIP 47K 1/16W 5%
R1531	061G0402473	T	RST CHIP 47K 1/16W 5%
R1232	061G0402473	T	RST CHIP 47K 1/16W 5%
R1231	061G0402473	T	RST CHIP 47K 1/16W 5%
R6145	061G0402473	Y	RST CHIPR 47KOHM +-5% 1/16W YAGEO
R6144	061G0402473	Y	RST CHIPR 47KOHM +-5% 1/16W YAGEO
R6140	061G0402473	Y	RST CHIPR 47KOHM +-5% 1/16W YAGEO
R6139	061G0402473	Y	RST CHIPR 47KOHM +-5% 1/16W YAGEO
R1531	061G0402473	Y	RST CHIPR 47KOHM +-5% 1/16W YAGEO
R1232	061G0402473	Y	RST CHIPR 47KOHM +-5% 1/16W YAGEO
R1231	061G0402473	Y	RST CHIPR 47KOHM +-5% 1/16W YAGEO
R1756	061G0402474	T	RST CHIP 470K 1/16W 5%
R1755	061G0402474	T	RST CHIP 470K 1/16W 5%
R1754	061G0402474	T	RST CHIP 470K 1/16W 5%
R1753	061G0402474	T	RST CHIP 470K 1/16W 5%
R1752	061G0402474	T	RST CHIP 470K 1/16W 5%

英华家电维修资料软件专用 购买QQ:505966338

R1751	061G0402474 T	RST CHIP 470K 1/16W 5%	
R1746	061G0402474 T	RST CHIP 470K 1/16W 5%	
R1745	061G0402474 T	RST CHIP 470K 1/16W 5%	
R1744	061G0402474 T	RST CHIP 470K 1/16W 5%	
R1743	061G0402474 T	RST CHIP 470K 1/16W 5%	
R1742	061G0402474 T	RST CHIP 470K 1/16W 5%	
R1741	061G0402474 T	RST CHIP 470K 1/16W 5%	
R1754	061G0402474 Y	RST CHIP 470K 1/16W 5%	
R1753	061G0402474 Y	RST CHIP 470K 1/16W 5%	
R1752	061G0402474 Y	RST CHIP 470K 1/16W 5%	
R1751	061G0402474 Y	RST CHIP 470K 1/16W 5%	
R1746	061G0402474 Y	RST CHIP 470K 1/16W 5%	
R1745	061G0402474 Y	RST CHIP 470K 1/16W 5%	
R1744	061G0402474 Y	RST CHIP 470K 1/16W 5%	
R1743	061G0402474 Y	RST CHIP 470K 1/16W 5%	
R1742	061G0402474 Y	RST CHIP 470K 1/16W 5%	
R1741	061G0402474 Y	RST CHIP 470K 1/16W 5%	
R1755	061G0402474 Y	RST CHIP 470K 1/16W 5%	
R1756	061G0402474 Y	RST CHIP 470K 1/16W 5%	
R7301	061G0402479 T	RST CHIP 4R7 1/16W 5%	
R7302	061G0402479 T	RST CHIP 4R7 1/16W 5%	
R7302	061G0402479 Y	RST CHIPR 4.7 OHM +-5% 1/16W YAGEO	
R7301	061G0402479 Y	RST CHIPR 4.7 OHM +-5% 1/16W YAGEO	
R4406	061G04025609FT	RST CHIP 56R 1/16W 1%	
R4407	061G04025609FT	RST CHIP 56R 1/16W 1%	
R4408	061G04025609FT	RST CHIP 56R 1/16W 1%	
R4409	061G04025609FT	RST CHIP 56R 1/16W 1%	
R4409	061G04025609FY	RST CHIP 56R 1/16W 1%	
R4408	061G04025609FY	RST CHIP 56R 1/16W 1%	
R4407	061G04025609FY	RST CHIP 56R 1/16W 1%	
R4406	061G04025609FY	RST CHIP 56R 1/16W 1%	
R4228	061G0402682 T	RST CHIP 6K8 1/16W 5%	
R4228	061G0402682 Y	RST CHIP 6K8 1/16W 5%	
R1242	061G04027509FT	RST CHIP 75R 1/16W 1%	
R1243	061G04027509FT	RST CHIP 75R 1/16W 1%	
R1249	061G04027509FT	RST CHIP 75R 1/16W 1%	
R1254	061G04027509FT	RST CHIP 75R 1/16W 1%	
R1255	061G04027509FT	RST CHIP 75R 1/16W 1%	
R1256	061G04027509FT	RST CHIP 75R 1/16W 1%	
R1423	061G04027509FT	RST CHIP 75R 1/16W 1%	
R1424	061G04027509FT	RST CHIP 75R 1/16W 1%	
R1425	061G04027509FT	RST CHIP 75R 1/16W 1%	
R1105	061G04027509FT	RST CHIP 75R 1/16W 1%	
R1201	061G04027509FT	RST CHIP 75R 1/16W 1%	
R1202	061G04027509FT	RST CHIP 75R 1/16W 1%	
R1203	061G04027509FT	RST CHIP 75R 1/16W 1%	
R1208	061G04027509FT	RST CHIP 75R 1/16W 1%	

英华家电维修资料软件专用 购买QQ:505966338

R1209	061G04027509FT	RST CHIP 75R 1/16W 1%	
R1210	061G04027509FT	RST CHIP 75R 1/16W 1%	
R1216	061G04027509FT	RST CHIP 75R 1/16W 1%	
R1222	061G04027509FT	RST CHIP 75R 1/16W 1%	
R1256	061G04027509FY	RST CHIPR 75 OHM +-1% 1/16W YAGEO	
R1255	061G04027509FY	RST CHIPR 75 OHM +-1% 1/16W YAGEO	
R1254	061G04027509FY	RST CHIPR 75 OHM +-1% 1/16W YAGEO	
R1249	061G04027509FY	RST CHIPR 75 OHM +-1% 1/16W YAGEO	
R1243	061G04027509FY	RST CHIPR 75 OHM +-1% 1/16W YAGEO	
R1242	061G04027509FY	RST CHIPR 75 OHM +-1% 1/16W YAGEO	
R1222	061G04027509FY	RST CHIPR 75 OHM +-1% 1/16W YAGEO	
R1216	061G04027509FY	RST CHIPR 75 OHM +-1% 1/16W YAGEO	
R1210	061G04027509FY	RST CHIPR 75 OHM +-1% 1/16W YAGEO	
R1209	061G04027509FY	RST CHIPR 75 OHM +-1% 1/16W YAGEO	
R1208	061G04027509FY	RST CHIPR 75 OHM +-1% 1/16W YAGEO	
R1203	061G04027509FY	RST CHIPR 75 OHM +-1% 1/16W YAGEO	
R1202	061G04027509FY	RST CHIPR 75 OHM +-1% 1/16W YAGEO	
R1201	061G04027509FY	RST CHIPR 75 OHM +-1% 1/16W YAGEO	
R1105	061G04027509FY	RST CHIPR 75 OHM +-1% 1/16W YAGEO	
R1423	061G04027509FY	RST CHIPR 75 OHM +-1% 1/16W YAGEO	
R1424	061G04027509FY	RST CHIPR 75 OHM +-1% 1/16W YAGEO	
R1425	061G04027509FY	RST CHIPR 75 OHM +-1% 1/16W YAGEO	
R4293	061G0603000 T	RST CHIP MAX 0R05 1/10W	
R1806	061G0603000 T	RST CHIP MAX 0R05 1/10W	
R1805	061G0603000 T	RST CHIP MAX 0R05 1/10W	
R1510	061G0603000 T	RST CHIP MAX 0R05 1/10W	
R1431	061G0603000 T	RST CHIP MAX 0R05 1/10W	
R1431	061G0603000 Y	RST CHIP MAX 0R05 1/10W YAGEO	
R1510	061G0603000 Y	RST CHIP MAX 0R05 1/10W YAGEO	
R1805	061G0603000 Y	RST CHIP MAX 0R05 1/10W YAGEO	
R1806	061G0603000 Y	RST CHIP MAX 0R05 1/10W YAGEO	
R4293	061G0603000 Y	RST CHIP MAX 0R05 1/10W YAGEO	
R7123	061G06031000FT	RST CHIP 100R 1/10W 1%	
R1223	061G06031000FT	RST CHIP 100R 1/10W 1%	
R1223	061G06031000FY	RST CHIPR 100 OHM +-1% 1/10W YAGEO	
R7123	061G06031000FY	RST CHIPR 100 OHM +-1% 1/10W YAGEO	
R7120	061G06031002FT	RST CHIP 10K 1/10W 1%	
R7131	061G06031002FT	RST CHIP 10K 1/10W 1%	
R7131	061G06031002FY	RST CHIPR 10KOHM +-1% 1/10W YAGEO	
R7120	061G06031002FY	RST CHIPR 10KOHM +-1% 1/10W YAGEO	
R4230	061G0603101 T	RST CHIP 100R 1/10W 5%	
R4285	061G0603101 T	RST CHIP 100R 1/10W 5%	
R6117	061G0603101 T	RST CHIP 100R 1/10W 5%	
R7208	061G0603101 T	RST CHIP 100R 1/10W 5%	
R7208	061G0603101 Y	RST CHIPR 100 OHM +-5% 1/10W YAGEO	
R6117	061G0603101 Y	RST CHIPR 100 OHM +-5% 1/10W YAGEO	
R4285	061G0603101 Y	RST CHIPR 100 OHM +-5% 1/10W YAGEO	

英华家电维修资料软件专用 购买QQ:505966338

R4230	061G0603101	Y	RST CHIPR 100 OHM +-5% 1/10W YAGEO
R4303	061G0603102	T	RST CHIP 1K 1/10W 5%
R4308	061G0603102	T	RST CHIP 1K 1/10W 5%
R6102	061G0603102	T	RST CHIP 1K 1/10W 5%
R7102	061G0603102	T	RST CHIP 1K 1/10W 5%
R7116	061G0603102	T	RST CHIP 1K 1/10W 5%
R7116	061G0603102	Y	RST CHIPR 1KOHM +-5% 1/10W YAGEO
R7102	061G0603102	Y	RST CHIPR 1KOHM +-5% 1/10W YAGEO
R6102	061G0603102	Y	RST CHIPR 1KOHM +-5% 1/10W YAGEO
R4308	061G0603102	Y	RST CHIPR 1KOHM +-5% 1/10W YAGEO
R4303	061G0603102	Y	RST CHIPR 1KOHM +-5% 1/10W YAGEO
R7209	061G0603103	T	RST CHIP 10K 1/10W 5%
R7206	061G0603103	T	RST CHIP 10K 1/10W 5%
R7205	061G0603103	T	RST CHIP 10K 1/10W 5%
R7115	061G0603103	T	RST CHIP 10K 1/10W 5%
R7105	061G0603103	T	RST CHIP 10K 1/10W 5%
R4420	061G0603103	T	RST CHIP 10K 1/10W 5%
R4402	061G0603103	T	RST CHIP 10K 1/10W 5%
R4401	061G0603103	T	RST CHIP 10K 1/10W 5%
R4294	061G0603103	T	RST CHIP 10K 1/10W 5%
R4292	061G0603103	T	RST CHIP 10K 1/10W 5%
R4291	061G0603103	T	RST CHIP 10K 1/10W 5%
R4290	061G0603103	T	RST CHIP 10K 1/10W 5%
R4203	061G0603103	T	RST CHIP 10K 1/10W 5%
R4203	061G0603103	Y	RST CHIPR 10KOHM +-5% 1/10W YAGEO
R4290	061G0603103	Y	RST CHIPR 10KOHM +-5% 1/10W YAGEO
R4291	061G0603103	Y	RST CHIPR 10KOHM +-5% 1/10W YAGEO
R4292	061G0603103	Y	RST CHIPR 10KOHM +-5% 1/10W YAGEO
R4294	061G0603103	Y	RST CHIPR 10KOHM +-5% 1/10W YAGEO
R4401	061G0603103	Y	RST CHIPR 10KOHM +-5% 1/10W YAGEO
R4402	061G0603103	Y	RST CHIPR 10KOHM +-5% 1/10W YAGEO
R4420	061G0603103	Y	RST CHIPR 10KOHM +-5% 1/10W YAGEO
R7105	061G0603103	Y	RST CHIPR 10KOHM +-5% 1/10W YAGEO
R7115	061G0603103	Y	RST CHIPR 10KOHM +-5% 1/10W YAGEO
R7205	061G0603103	Y	RST CHIPR 10KOHM +-5% 1/10W YAGEO
R7206	061G0603103	Y	RST CHIPR 10KOHM +-5% 1/10W YAGEO
R7209	061G0603103	Y	RST CHIPR 10KOHM +-5% 1/10W YAGEO
R1613	061G0603104	T	RST CHIP 100K 1/10W 5%
R1614	061G0603104	T	RST CHIP 100K 1/10W 5%
R1617	061G0603104	T	RST CHIP 100K 1/10W 5%
R1618	061G0603104	T	RST CHIP 100K 1/10W 5%
R1624	061G0603104	T	RST CHIP 100K 1/10W 5%
R1631	061G0603104	T	RST CHIP 100K 1/10W 5%
R1631	061G0603104	Y	RST CHIPR 100KOHM +-5% 1/10W YAGEO
R1624	061G0603104	Y	RST CHIPR 100KOHM +-5% 1/10W YAGEO
R1618	061G0603104	Y	RST CHIPR 100KOHM +-5% 1/10W YAGEO
R1617	061G0603104	Y	RST CHIPR 100KOHM +-5% 1/10W YAGEO

英华家电维修资料软件专用 购买QQ:505966338

R1614	061G0603104 Y	RST CHIPR 100KOHM +-5% 1/10W YAGEO	
R1613	061G0603104 Y	RST CHIPR 100KOHM +-5% 1/10W YAGEO	
R7124	061G06031100FT	RST CHIP 110R 1/10W 1%	
R7124	061G06031100FY	RST CHIPR 110 OHM +-1% 1/10W YAGEO	
R7140	061G06031200FT	RST CHIP 120R 1/10W 1%	
R7125	061G06031200FT	RST CHIP 120R 1/10W 1%	
R7125	061G06031200FY	RST CHIPR 120 OHM +-1% 1/10W YAGEO	
R7140	061G06031200FY	RST CHIPR 120 OHM +-1% 1/10W YAGEO	
R4229	061G0603153 T	RST CHIP 15K 1/10W 5%	
R4229	061G0603153 Y	RST CHIPR 15KOHM +-5% 1/10W YAGEO	
R1726	061G0603181 T	RST CHIP 180R 1/10W 5%	
R1726	061G0603181 Y	RST CHIPR 180 OHM +-5% 1/10W YAGEO	
R6119	061G0603182 T	RST CHIP 1K8 1/10W 5%	
R6119	061G0603182 Y	RST CHIPR 1.8KOHM +-5% 1/10W YAGEO	
R6104	061G0603183 T	RST CHIP 18K 1/10W 5%	
R6104	061G0603183 Y	RST CHIPR 18KOHM +-5% 1/10W YAGEO	
R7137	061G06032000FT	RST CHIP 200R 1/10W 1%	
R7141	061G06032000FT	RST CHIP 200R 1/10W 1%	
R7137	061G06032000FY	RST CHIPR 200 OHM +-1% 1/10W YAGEO	
R7141	061G06032000FY	RST CHIPR 200 OHM +-1% 1/10W YAGEO	
R7128	061G0603203 T	RST CHIP 20K 1/10W 5%	
R7128	061G0603203 Y	RST CHIPR 20KOHM +-5% 1/10W YAGEO	
R1553	061G06032701FT	RST CHIP 2K7 1/10W 1%	
R7119	061G06032701FT	RST CHIP 2K7 1/10W 1%	
R1553	061G06032701FY	RST CHIPR 2.7KOHM +-1% 1/10W YAGEO	
R7119	061G06032701FY	RST CHIPR 2.7KOHM +-1% 1/10W YAGEO	
R1615	061G0603271 T	RST CHIP 270R 1/10W 5%	
R1619	061G0603271 T	RST CHIP 270R 1/10W 5%	
R1629	061G0603271 T	RST CHIP 270R 1/10W 5%	
R1630	061G0603271 T	RST CHIP 270R 1/10W 5%	
R1632	061G0603271 T	RST CHIP 270R 1/10W 5%	
R1633	061G0603271 T	RST CHIP 270R 1/10W 5%	
R6148	061G0603330 T	RST CHIP 33R 1/10W 5%	
R1227	061G0603330 T	RST CHIP 33R 1/10W 5%	
R6112	061G0603330 T	RST CHIP 33R 1/10W 5%	
R6148	061G0603330 Y	RST CHIPR 33 OHM +-5% 1/10W YAGEO	
R1227	061G0603330 Y	RST CHIPR 33 OHM +-5% 1/10W YAGEO	
R6112	061G0603330 Y	RST CHIPR 33 OHM +-5% 1/10W YAGEO	
R1224	061G06033309FT	RST CHIP 33R 1/10W 1%	
R1224	061G06033309FY	RST CHIPR 33 OHM +-1% 1/10W YAGEO	
R7130	061G06034302FT	RST CHIPR 43KOHM 1% 1/10W TZAI YUAN	
R7130	061G06034302FY	RST CHIPR 43KOHM +-1% 1/10W YAGEO	
R6118	061G0603471 T	RST CHIP 470R 1/10W 5%	
R6118	061G0603471 Y	RST CHIPR 470 OHM +-5% 1/10W YAGEO	
R7213	061G0603473 T	RST CHIP 47K 1/10W 5%	
R7138	061G0603473 T	RST CHIP 47K 1/10W 5%	
R7101	061G0603473 T	RST CHIP 47K 1/10W 5%	

英华家电维修资料软件专用 购买QQ:505966338

R6147	061G0603473 T	RST CHIP 47K 1/10W 5%	
R6111	061G0603473 T	RST CHIP 47K 1/10W 5%	
R6101	061G0603473 T	RST CHIP 47K 1/10W 5%	
R1233	061G0603473 T	RST CHIP 47K 1/10W 5%	
R1616	061G0603473 T	RST CHIP 47K 1/10W 5%	
R1620	061G0603473 T	RST CHIP 47K 1/10W 5%	
R1621	061G0603473 T	RST CHIP 47K 1/10W 5%	
R1622	061G0603473 T	RST CHIP 47K 1/10W 5%	
R1623	061G0603473 T	RST CHIP 47K 1/10W 5%	
R1634	061G0603473 T	RST CHIP 47K 1/10W 5%	
R7213	061G0603473 Y	RST CHIPR 47KOHM +-5% 1/10W YAGEO	
R7138	061G0603473 Y	RST CHIPR 47KOHM +-5% 1/10W YAGEO	
R7101	061G0603473 Y	RST CHIPR 47KOHM +-5% 1/10W YAGEO	
R6147	061G0603473 Y	RST CHIPR 47KOHM +-5% 1/10W YAGEO	
R6111	061G0603473 Y	RST CHIPR 47KOHM +-5% 1/10W YAGEO	
R6101	061G0603473 Y	RST CHIPR 47KOHM +-5% 1/10W YAGEO	
R1634	061G0603473 Y	RST CHIPR 47KOHM +-5% 1/10W YAGEO	
R1623	061G0603473 Y	RST CHIPR 47KOHM +-5% 1/10W YAGEO	
R1622	061G0603473 Y	RST CHIPR 47KOHM +-5% 1/10W YAGEO	
R1621	061G0603473 Y	RST CHIPR 47KOHM +-5% 1/10W YAGEO	
R1620	061G0603473 Y	RST CHIPR 47KOHM +-5% 1/10W YAGEO	
R1616	061G0603473 Y	RST CHIPR 47KOHM +-5% 1/10W YAGEO	
R1233	061G0603473 Y	RST CHIPR 47KOHM +-5% 1/10W YAGEO	
R6105	061G0603474 T	RST CHIP 470K 1/10W 5%	
R6105	061G0603474 Y	RST CHIPR 470KOHM +-5% 1/10W YAGEO	
R7139	061G0603563 T	RST CHIP 56K 1/10W 5%	
R7127	061G0603563 T	RST CHIP 56K 1/10W 5%	
R7117	061G0603563 T	RST CHIP 56K 1/10W 5%	
R7113	061G0603563 T	RST CHIP 56K 1/10W 5%	
R7104	061G0603563 T	RST CHIP 56K 1/10W 5%	
R7103	061G0603563 T	RST CHIP 56K 1/10W 5%	
R6103	061G0603563 T	RST CHIP 56K 1/10W 5%	
R7139	061G0603563 Y	RST CHIPR 56KOHM +-5% 1/10W YAGEO	
R7127	061G0603563 Y	RST CHIPR 56KOHM +-5% 1/10W YAGEO	
R7117	061G0603563 Y	RST CHIPR 56KOHM +-5% 1/10W YAGEO	
R7113	061G0603563 Y	RST CHIPR 56KOHM +-5% 1/10W YAGEO	
R7104	061G0603563 Y	RST CHIPR 56KOHM +-5% 1/10W YAGEO	
R7103	061G0603563 Y	RST CHIPR 56KOHM +-5% 1/10W YAGEO	
R6103	061G0603563 Y	RST CHIPR 56KOHM +-5% 1/10W YAGEO	
R1727	061G06037509FT	RST CHIP 75R 1/10W 1%	
R1727	061G06037509FY	RST CHIPR 75 OHM +-1% 1/10W YAGEO	
R7121	061G0603822 T	RST CHIP 8K2 1/10W 5%	
R7121	061G0603822 Y	RST CHIPR 8.2KOHM +-5% 1/10W YAGEO	
R1722	061G0603911 T	RST CHIP 910R 1/10W 5%	
R1722	061G0603911 Y	RST CHIPR 910 OHM +-5% 1/10W YAGEO	
R6107	061G0805103 T	RST CHIP 10K 1/8W 5%	
R6106	061G0805103 T	RST CHIP 10K 1/8W 5%	

英华家电维修资料软件专用 购买QQ:505966338

R6106	061G0805103 Y	RST CHIPR 10KOHM +-5% 1/8W YAGEO	
R6107	061G0805103 Y	RST CHIPR 10KOHM +-5% 1/8W YAGEO	
R7118	061G0805229 T	RST CHIP 2R2 1/8W 5%	
R7129	061G0805229 T	RST CHIP 2R2 1/8W 5%	
R7118	061G0805229 Y	RST CHIP 2R2 1/8W 5%	
R7129	061G0805229 Y	RST CHIP 2R2 1/8W 5%	
R6666	061G12060007JF	RST CHIPR MAX0R05 7A 1/4W FENGHUA	
R6666	061G12060007JY	RST CHIPR MAX0R05 7A 1/4W YAGEO	
R6122	061G1206222 T	RST CHIP 2K2 1/4W 5%	
R6123	061G1206222 T	RST CHIP 2K2 1/4W 5%	
R6129	061G1206222 T	RST CHIP 2K2 1/4W 5%	
R6130	061G1206222 T	RST CHIP 2K2 1/4W 5%	
R6130	061G1206222 Y	RST CHIPR 2.2KOHM +-5% 1/4W YAGEO	
R6129	061G1206222 Y	RST CHIPR 2.2KOHM +-5% 1/4W YAGEO	
R6123	061G1206222 Y	RST CHIPR 2.2KOHM +-5% 1/4W YAGEO	
R6122	061G1206222 Y	RST CHIPR 2.2KOHM +-5% 1/4W YAGEO	
C4230	065G040210131J 3	CAP CHIP 0402 100P 50V NPO +/-5%	
C4233	065G040210131J 3	CAP CHIP 0402 100P 50V NPO +/-5%	
C4236	065G040210131J 3	CAP CHIP 0402 100P 50V NPO +/-5%	
C1526	065G040210131J 3	CAP CHIP 0402 100P 50V NPO +/-5%	
C1529	065G040210131J 3	CAP CHIP 0402 100P 50V NPO +/-5%	
C1757	065G040210131J 3	CAP CHIP 0402 100P 50V NPO +/-5%	
C4111	065G040210131J 3	CAP CHIP 0402 100P 50V NPO +/-5%	
C4236	065G040210131J Y	CAP CHIP 0402 100P 50V NPO +/-5%	
C4233	065G040210131J Y	CAP CHIP 0402 100P 50V NPO +/-5%	
C4230	065G040210131J Y	CAP CHIP 0402 100P 50V NPO +/-5%	
C4111	065G040210131J Y	CAP CHIP 0402 100P 50V NPO +/-5%	
C1757	065G040210131J Y	CAP CHIP 0402 100P 50V NPO +/-5%	
C1529	065G040210131J Y	CAP CHIP 0402 100P 50V NPO +/-5%	
C1526	065G040210131J Y	CAP CHIP 0402 100P 50V NPO +/-5%	
C1207	065G040210232K 3	CHIP 1000PF 50V X7R	
C1214	065G040210232K 3	CHIP 1000PF 50V X7R	
C1409	065G040210232K 3	CHIP 1000PF 50V X7R	
C4245	065G040210232K 3	CHIP 1000PF 50V X7R	
C4411	065G040210232K 3	CHIP 1000PF 50V X7R	
C4411	065G040210232K Y	CAP CHIP 0402 1N 50V X7R +/-10%	
C4245	065G040210232K Y	CAP CHIP 0402 1N 50V X7R +/-10%	
C1409	065G040210232K Y	CAP CHIP 0402 1N 50V X7R +/-10%	
C1214	065G040210232K Y	CAP CHIP 0402 1N 50V X7R +/-10%	
C1207	065G040210232K Y	CAP CHIP 0402 1N 50V X7R +/-10%	
C6133	065G040210312K Y	CAP CHIP 0402 10N 16V X7R +/-10%	
C6132	065G040210312K Y	CAP CHIP 0402 10N 16V X7R +/-10%	
C6105	065G040210312K Y	CAP CHIP 0402 10N 16V X7R +/-10%	
C6104	065G040210312K Y	CAP CHIP 0402 10N 16V X7R +/-10%	
C4417	065G040210312K Y	CAP CHIP 0402 10N 16V X7R +/-10%	
C4416	065G040210312K Y	CAP CHIP 0402 10N 16V X7R +/-10%	
C1247	065G040210312K Y	CAP CHIP 0402 10N 16V X7R +/-10%	

英华家电维修资料软件专用 购买QQ:505966338

C1246	065G040210312K	Y	CAP CHIP 0402 10N 16V X7R +/-10%	
C1104	065G040210312K	Y	CAP CHIP 0402 10N 16V X7R +/-10%	
C4210	065G040210412K	Y	CAP CHIP 0402 100N 16V X7R +/-10%	
C4209	065G040210412K	Y	CAP CHIP 0402 100N 16V X7R +/-10%	
C4207	065G040210412K	Y	CAP CHIP 0402 100N 16V X7R +/-10%	
C4205	065G040210412K	Y	CAP CHIP 0402 100N 16V X7R +/-10%	
C4204	065G040210412K	Y	CAP CHIP 0402 100N 16V X7R +/-10%	
C4203	065G040210412K	Y	CAP CHIP 0402 100N 16V X7R +/-10%	
C4202	065G040210412K	Y	CAP CHIP 0402 100N 16V X7R +/-10%	
C1755	065G040210412K	Y	CAP CHIP 0402 100N 16V X7R +/-10%	
C1742	065G040210412K	Y	CAP CHIP 0402 100N 16V X7R +/-10%	
C1735	065G040210412K	Y	CAP CHIP 0402 100N 16V X7R +/-10%	
C1734	065G040210412K	Y	CAP CHIP 0402 100N 16V X7R +/-10%	
C4211	065G040210412K	Y	CAP CHIP 0402 100N 16V X7R +/-10%	
C4212	065G040210412K	Y	CAP CHIP 0402 100N 16V X7R +/-10%	
C4213	065G040210412K	Y	CAP CHIP 0402 100N 16V X7R +/-10%	
C4214	065G040210412K	Y	CAP CHIP 0402 100N 16V X7R +/-10%	
C4215	065G040210412K	Y	CAP CHIP 0402 100N 16V X7R +/-10%	
C4217	065G040210412K	Y	CAP CHIP 0402 100N 16V X7R +/-10%	
C4218	065G040210412K	Y	CAP CHIP 0402 100N 16V X7R +/-10%	
C4219	065G040210412K	Y	CAP CHIP 0402 100N 16V X7R +/-10%	
C4220	065G040210412K	Y	CAP CHIP 0402 100N 16V X7R +/-10%	
C4221	065G040210412K	Y	CAP CHIP 0402 100N 16V X7R +/-10%	
C4223	065G040210412K	Y	CAP CHIP 0402 100N 16V X7R +/-10%	
C4225	065G040210412K	Y	CAP CHIP 0402 100N 16V X7R +/-10%	
C7106	065G040210412K	Y	CAP CHIP 0402 100N 16V X7R +/-10%	
C6142	065G040210412K	Y	CAP CHIP 0402 100N 16V X7R +/-10%	
C6141	065G040210412K	Y	CAP CHIP 0402 100N 16V X7R +/-10%	
C6115	065G040210412K	Y	CAP CHIP 0402 100N 16V X7R +/-10%	
C6114	065G040210412K	Y	CAP CHIP 0402 100N 16V X7R +/-10%	
C4414	065G040210412K	Y	CAP CHIP 0402 100N 16V X7R +/-10%	
C4413	065G040210412K	Y	CAP CHIP 0402 100N 16V X7R +/-10%	
C4412	065G040210412K	Y	CAP CHIP 0402 100N 16V X7R +/-10%	
C4410	065G040210412K	Y	CAP CHIP 0402 100N 16V X7R +/-10%	
C4409	065G040210412K	Y	CAP CHIP 0402 100N 16V X7R +/-10%	
C4408	065G040210412K	Y	CAP CHIP 0402 100N 16V X7R +/-10%	
C4407	065G040210412K	Y	CAP CHIP 0402 100N 16V X7R +/-10%	
C4406	065G040210412K	Y	CAP CHIP 0402 100N 16V X7R +/-10%	
C7306	065G040210412K	Y	CAP CHIP 0402 100N 16V X7R +/-10%	
C7302	065G040210412K	Y	CAP CHIP 0402 100N 16V X7R +/-10%	
C7301	065G040210412K	Y	CAP CHIP 0402 100N 16V X7R +/-10%	
C7164	065G040210412K	Y	CAP CHIP 0402 100N 16V X7R +/-10%	
C7163	065G040210412K	Y	CAP CHIP 0402 100N 16V X7R +/-10%	
C7160	065G040210412K	Y	CAP CHIP 0402 100N 16V X7R +/-10%	
C7159	065G040210412K	Y	CAP CHIP 0402 100N 16V X7R +/-10%	
C7157	065G040210412K	Y	CAP CHIP 0402 100N 16V X7R +/-10%	
C7133	065G040210412K	Y	CAP CHIP 0402 100N 16V X7R +/-10%	

英华家电维修资料软件专用 购买QQ:505966338

C7131	065G040210412K	Y	CAP CHIP 0402 100N 16V X7R +/-10%	
C7118	065G040210412K	Y	CAP CHIP 0402 100N 16V X7R +/-10%	
C7114	065G040210412K	Y	CAP CHIP 0402 100N 16V X7R +/-10%	
C7113	065G040210412K	Y	CAP CHIP 0402 100N 16V X7R +/-10%	
C4250	065G040210412K	Y	CAP CHIP 0402 100N 16V X7R +/-10%	
C4246	065G040210412K	Y	CAP CHIP 0402 100N 16V X7R +/-10%	
C4244	065G040210412K	Y	CAP CHIP 0402 100N 16V X7R +/-10%	
C4243	065G040210412K	Y	CAP CHIP 0402 100N 16V X7R +/-10%	
C4242	065G040210412K	Y	CAP CHIP 0402 100N 16V X7R +/-10%	
C4241	065G040210412K	Y	CAP CHIP 0402 100N 16V X7R +/-10%	
C4240	065G040210412K	Y	CAP CHIP 0402 100N 16V X7R +/-10%	
C4239	065G040210412K	Y	CAP CHIP 0402 100N 16V X7R +/-10%	
C4238	065G040210412K	Y	CAP CHIP 0402 100N 16V X7R +/-10%	
C4235	065G040210412K	Y	CAP CHIP 0402 100N 16V X7R +/-10%	
C4232	065G040210412K	Y	CAP CHIP 0402 100N 16V X7R +/-10%	
C4229	065G040210412K	Y	CAP CHIP 0402 100N 16V X7R +/-10%	
C4227	065G040210412K	Y	CAP CHIP 0402 100N 16V X7R +/-10%	
C4405	065G040210412K	Y	CAP CHIP 0402 100N 16V X7R +/-10%	
C4404	065G040210412K	Y	CAP CHIP 0402 100N 16V X7R +/-10%	
C4403	065G040210412K	Y	CAP CHIP 0402 100N 16V X7R +/-10%	
C4402	065G040210412K	Y	CAP CHIP 0402 100N 16V X7R +/-10%	
C4271	065G040210412K	Y	CAP CHIP 0402 100N 16V X7R +/-10%	
C4260	065G040210412K	Y	CAP CHIP 0402 100N 16V X7R +/-10%	
C4259	065G040210412K	Y	CAP CHIP 0402 100N 16V X7R +/-10%	
C4258	065G040210412K	Y	CAP CHIP 0402 100N 16V X7R +/-10%	
C4256	065G040210412K	Y	CAP CHIP 0402 100N 16V X7R +/-10%	
C4255	065G040210412K	Y	CAP CHIP 0402 100N 16V X7R +/-10%	
C4254	065G040210412K	Y	CAP CHIP 0402 100N 16V X7R +/-10%	
C4252	065G040210412K	Y	CAP CHIP 0402 100N 16V X7R +/-10%	
C4251	065G040210412K	Y	CAP CHIP 0402 100N 16V X7R +/-10%	
C1528	065G040210412K	Y	CAP CHIP 0402 100N 16V X7R +/-10%	
C1112	065G040210412K	Y	CAP CHIP 0402 100N 16V X7R +/-10%	
C1113	065G040210412K	Y	CAP CHIP 0402 100N 16V X7R +/-10%	
C1227	065G040210412K	Y	CAP CHIP 0402 100N 16V X7R +/-10%	
C1239	065G040210412K	Y	CAP CHIP 0402 100N 16V X7R +/-10%	
C1240	065G040210412K	Y	CAP CHIP 0402 100N 16V X7R +/-10%	
C1401	065G040210412K	Y	CAP CHIP 0402 100N 16V X7R +/-10%	
C1405	065G040210412K	Y	CAP CHIP 0402 100N 16V X7R +/-10%	
C1510	065G040210412K	Y	CAP CHIP 0402 100N 16V X7R +/-10%	
C1511	065G040210412K	Y	CAP CHIP 0402 100N 16V X7R +/-10%	
C1512	065G040210412K	Y	CAP CHIP 0402 100N 16V X7R +/-10%	
C1513	065G040210412K	Y	CAP CHIP 0402 100N 16V X7R +/-10%	
C1514	065G040210412K	Y	CAP CHIP 0402 100N 16V X7R +/-10%	
C1527	065G040210412K	Y	CAP CHIP 0402 100N 16V X7R +/-10%	
C1525	065G040210412K	Y	CAP CHIP 0402 100N 16V X7R +/-10%	
C1523	065G040210412K	Y	CAP CHIP 0402 100N 16V X7R +/-10%	
C1522	065G040210412K	Y	CAP CHIP 0402 100N 16V X7R +/-10%	

英华家电维修资料软件专用 购买QQ:505966338

C1521	065G040210412K	Y	CAP CHIP 0402 100N 16V X7R +/-10%	
C1520	065G040210412K	Y	CAP CHIP 0402 100N 16V X7R +/-10%	
C1519	065G040210412K	Y	CAP CHIP 0402 100N 16V X7R +/-10%	
C1518	065G040210412K	Y	CAP CHIP 0402 100N 16V X7R +/-10%	
C1517	065G040210412K	Y	CAP CHIP 0402 100N 16V X7R +/-10%	
C1516	065G040210412K	Y	CAP CHIP 0402 100N 16V X7R +/-10%	
C1515	065G040210412K	Y	CAP CHIP 0402 100N 16V X7R +/-10%	
C1707	065G040222031J	3	CAP CHIP 0402 22P 50V NPO +/-5%	
C1710	065G040222031J	3	CAP CHIP 0402 22P 50V NPO +/-5%	
C1713	065G040222031J	3	CAP CHIP 0402 22P 50V NPO +/-5%	
C1716	065G040222031J	3	CAP CHIP 0402 22P 50V NPO +/-5%	
C1719	065G040222031J	3	CAP CHIP 0402 22P 50V NPO +/-5%	
C1722	065G040222031J	3	CAP CHIP 0402 22P 50V NPO +/-5%	
C1730	065G040222031J	3	CAP CHIP 0402 22P 50V NPO +/-5%	
C1736	065G040222031J	3	CAP CHIP 0402 22P 50V NPO +/-5%	
C1737	065G040222031J	3	CAP CHIP 0402 22P 50V NPO +/-5%	
C1738	065G040222031J	3	CAP CHIP 0402 22P 50V NPO +/-5%	
C1765	065G040222031J	3	CAP CHIP 0402 22P 50V NPO +/-5%	
C1766	065G040222031J	3	CAP CHIP 0402 22P 50V NPO +/-5%	
C4107	065G040222031J	3	CAP CHIP 0402 22P 50V NPO +/-5%	
C1111	065G040222031J	3	CAP CHIP 0402 22P 50V NPO +/-5%	
C1537	065G040222031J	3	CAP CHIP 0402 22P 50V NPO +/-5%	
C1730	065G040222031J	Y	CAP CHIP 0402 22P 50V NPO +/-5%	
C1722	065G040222031J	Y	CAP CHIP 0402 22P 50V NPO +/-5%	
C1719	065G040222031J	Y	CAP CHIP 0402 22P 50V NPO +/-5%	
C1716	065G040222031J	Y	CAP CHIP 0402 22P 50V NPO +/-5%	
C1713	065G040222031J	Y	CAP CHIP 0402 22P 50V NPO +/-5%	
C1710	065G040222031J	Y	CAP CHIP 0402 22P 50V NPO +/-5%	
C1707	065G040222031J	Y	CAP CHIP 0402 22P 50V NPO +/-5%	
C1736	065G040222031J	Y	CAP CHIP 0402 22P 50V NPO +/-5%	
C1737	065G040222031J	Y	CAP CHIP 0402 22P 50V NPO +/-5%	
C1537	065G040222031J	Y	CAP CHIP 0402 22P 50V NPO +/-5%	
C1111	065G040222031J	Y	CAP CHIP 0402 22P 50V NPO +/-5%	
C4107	065G040222031J	Y	CAP CHIP 0402 22P 50V NPO +/-5%	
C1766	065G040222031J	Y	CAP CHIP 0402 22P 50V NPO +/-5%	
C1765	065G040222031J	Y	CAP CHIP 0402 22P 50V NPO +/-5%	
C1738	065G040222031J	Y	CAP CHIP 0402 22P 50V NPO +/-5%	
C6151	065G040222132K	Y	CAP CHIP 0402 220PF 50V X7R +/-10%	
C1232	065G040222232K	3	CAP CHIP 0402 2N2 50V X7R +/-10%	
C1231	065G040222232K	3	CAP CHIP 0402 2N2 50V X7R +/-10%	
C1232	065G040222232K	Y	CAP CHIP 0402 2N2 50V X7R +/-10%	
C1231	065G040222232K	Y	CAP CHIP 0402 2N2 50V X7R +/-10%	
C1242	065G040233031J	Y	CAP CHIP 0402 33P 50V NPO +/-5%	
C1243	065G040233031J	Y	CAP CHIP 0402 33P 50V NPO +/-5%	
C6112	065G040233031J	Y	CAP CHIP 0402 33P 50V NPO +/-5%	
C6113	065G040233031J	Y	CAP CHIP 0402 33P 50V NPO +/-5%	
C6144	065G040233031J	Y	CAP CHIP 0402 33P 50V NPO +/-5%	

英华家电维修资料软件专用 购买QQ:505966338

C6145	065G040233031J Y	CAP CHIP 0402 33P 50V NPO +/-5%	
C7304	065G040233031J Y	CAP CHIP 0402 33P 50V NPO +/-5%	
C1235	065G040233132K 3	CAP CHIP 0402 330P 50V X7R 10%	
C1236	065G040233132K 3	CAP CHIP 0402 330P 50V X7R 10%	
C6108	065G040233132K 3	CAP CHIP 0402 330P 50V X7R 10%	
C6109	065G040233132K 3	CAP CHIP 0402 330P 50V X7R 10%	
C6137	065G040233132K 3	CAP CHIP 0402 330P 50V X7R 10%	
C6138	065G040233132K 3	CAP CHIP 0402 330P 50V X7R 10%	
C1235	065G040233132K Y	CAP CHIP 0402 330P 50V X7R +/-10%	
C1236	065G040233132K Y	CAP CHIP 0402 330P 50V X7R +/-10%	
C6108	065G040233132K Y	CAP CHIP 0402 330P 50V X7R +/-10%	
C6109	065G040233132K Y	CAP CHIP 0402 330P 50V X7R +/-10%	
C6137	065G040233132K Y	CAP CHIP 0402 330P 50V X7R +/-10%	
C6138	065G040233132K Y	CAP CHIP 0402 330P 50V X7R +/-10%	
C1255	065G040247031J 3	CAP CHIP 0402 47P 50V NPO +/-5%	
C1230	065G040247031J 3	CAP CHIP 0402 47P 50V NPO +/-5%	
C1128	065G040247031J 3	CAP CHIP 0402 47P 50V NPO +/-5%	
C1127	065G040247031J 3	CAP CHIP 0402 47P 50V NPO +/-5%	
C1127	065G040247031J Y	CAP CHIP 0402 47PF 50V NPO +/-5%	
C1128	065G040247031J Y	CAP CHIP 0402 47PF 50V NPO +/-5%	
C1230	065G040247031J Y	CAP CHIP 0402 47PF 50V NPO +/-5%	
C1255	065G040247031J Y	CAP CHIP 0402 47PF 50V NPO +/-5%	
C1109	065G040247312K Y	CAP CHIP 0402 47NF 16V X7R	
C1256	065G040247312K Y	CAP CHIP 0402 47NF 16V X7R	
C1406	065G040247312K Y	CAP CHIP 0402 47NF 16V X7R	
C1407	065G040247312K Y	CAP CHIP 0402 47NF 16V X7R	
C1408	065G040247312K Y	CAP CHIP 0402 47NF 16V X7R	
C1254	065G040247312K Y	CAP CHIP 0402 47NF 16V X7R	
C1253	065G040247312K Y	CAP CHIP 0402 47NF 16V X7R	
C1252	065G040247312K Y	CAP CHIP 0402 47NF 16V X7R	
C1223	065G040247312K Y	CAP CHIP 0402 47NF 16V X7R	
C1213	065G040247312K Y	CAP CHIP 0402 47NF 16V X7R	
C1212	065G040247312K Y	CAP CHIP 0402 47NF 16V X7R	
C1211	065G040247312K Y	CAP CHIP 0402 47NF 16V X7R	
C1206	065G040247312K Y	CAP CHIP 0402 47NF 16V X7R	
C1205	065G040247312K Y	CAP CHIP 0402 47NF 16V X7R	
C1204	065G040247312K Y	CAP CHIP 0402 47NF 16V X7R	
C1114	065G040247312K Y	CAP CHIP 0402 47NF 16V X7R	
C1611	065G060310422K 3	CAP CHIP 0603 100N 25V X7R +/-10%	
C1612	065G060310422K 3	CAP CHIP 0603 100N 25V X7R +/-10%	
C1613	065G060310422K 3	CAP CHIP 0603 100N 25V X7R +/-10%	
C1616	065G060310422K 3	CAP CHIP 0603 100N 25V X7R +/-10%	
C1622	065G060310422K 3	CAP CHIP 0603 100N 25V X7R +/-10%	
C1623	065G060310422K 3	CAP CHIP 0603 100N 25V X7R +/-10%	
C1624	065G060310422K 3	CAP CHIP 0603 100N 25V X7R +/-10%	
C1611	065G060310422K Y	CAP CHIP 0603 100N 25V X7R +/-10%	
C1612	065G060310422K Y	CAP CHIP 0603 100N 25V X7R +/-10%	

英华家电维修资料软件专用 购买QQ:505966338

C1613	065G060310422K	Y	CAP CHIP 0603 100N 25V X7R +/-10%	
C1616	065G060310422K	Y	CAP CHIP 0603 100N 25V X7R +/-10%	
C1622	065G060310422K	Y	CAP CHIP 0603 100N 25V X7R +/-10%	
C1623	065G060310422K	Y	CAP CHIP 0603 100N 25V X7R +/-10%	
C1624	065G060310422K	Y	CAP CHIP 0603 100N 25V X7R +/-10%	
C7111	065G060310432K	3	CAP CHIP 0603 0.1UF K 50V X7R	
C7111	065G060310432K	Y	CAP CHIP 0603 0.1UF K 50V X7R	
C7216	065G060310437Z	3	CAP CHIP 0603 0.1UF Z 50V Y5V	
C7215	065G060310437Z	3	CAP CHIP 0603 0.1UF Z 50V Y5V	
C7212	065G060310437Z	3	CAP CHIP 0603 0.1UF Z 50V Y5V	
C7209	065G060310437Z	3	CAP CHIP 0603 0.1UF Z 50V Y5V	
C7206	065G060310437Z	3	CAP CHIP 0603 0.1UF Z 50V Y5V	
C7204	065G060310437Z	3	CAP CHIP 0603 0.1UF Z 50V Y5V	
C6148	065G060310437Z	3	CAP CHIP 0603 0.1UF Z 50V Y5V	
C6102	065G060310437Z	3	CAP CHIP 0603 0.1UF Z 50V Y5V	
C7216	065G060310437Z	Y	CAP CHIP 0603 100N 50V Y5V -20%+80%	
C7215	065G060310437Z	Y	CAP CHIP 0603 100N 50V Y5V -20%+80%	
C7212	065G060310437Z	Y	CAP CHIP 0603 100N 50V Y5V -20%+80%	
C7209	065G060310437Z	Y	CAP CHIP 0603 100N 50V Y5V -20%+80%	
C7206	065G060310437Z	Y	CAP CHIP 0603 100N 50V Y5V -20%+80%	
C7204	065G060310437Z	Y	CAP CHIP 0603 100N 50V Y5V -20%+80%	
C6148	065G060310437Z	Y	CAP CHIP 0603 100N 50V Y5V -20%+80%	
C6102	065G060310437Z	Y	CAP CHIP 0603 100N 50V Y5V -20%+80%	
C6117	065G060310512K	3	MLCC 0603 CAP 1UF K 16V X7R	
C6118	065G060310512K	3	MLCC 0603 CAP 1UF K 16V X7R	
C6117	065G060310512K	T	CAP CHIP 0603 1UF K 16V X7R	
C6118	065G060310512K	T	CAP CHIP 0603 1UF K 16V X7R	
C4262	065G0603105A7Z	3	CAP CHIP 0603 1U 10V Y5V -20%+80%	
C1762	065G0603105A7Z	3	CAP CHIP 0603 1U 10V Y5V -20%+80%	
C1759	065G0603105A7Z	3	CAP CHIP 0603 1U 10V Y5V -20%+80%	
C1754	065G0603105A7Z	3	CAP CHIP 0603 1U 10V Y5V -20%+80%	
C1753	065G0603105A7Z	3	CAP CHIP 0603 1U 10V Y5V -20%+80%	
C1750	065G0603105A7Z	3	CAP CHIP 0603 1U 10V Y5V -20%+80%	
C1749	065G0603105A7Z	3	CAP CHIP 0603 1U 10V Y5V -20%+80%	
C1748	065G0603105A7Z	3	CAP CHIP 0603 1U 10V Y5V -20%+80%	
C1747	065G0603105A7Z	3	CAP CHIP 0603 1U 10V Y5V -20%+80%	
C1724	065G0603105A7Z	3	CAP CHIP 0603 1U 10V Y5V -20%+80%	
C1721	065G0603105A7Z	3	CAP CHIP 0603 1U 10V Y5V -20%+80%	
C1718	065G0603105A7Z	3	CAP CHIP 0603 1U 10V Y5V -20%+80%	
C1715	065G0603105A7Z	3	CAP CHIP 0603 1U 10V Y5V -20%+80%	
C1234	065G0603105A7Z	3	CAP CHIP 0603 1U 10V Y5V -20%+80%	
C1233	065G0603105A7Z	3	CAP CHIP 0603 1U 10V Y5V -20%+80%	
C1754	065G0603105A7Z	Y	CAP CHIP 0603 1U 10V Y5V -20%+80%	
C1753	065G0603105A7Z	Y	CAP CHIP 0603 1U 10V Y5V -20%+80%	
C1750	065G0603105A7Z	Y	CAP CHIP 0603 1U 10V Y5V -20%+80%	
C1749	065G0603105A7Z	Y	CAP CHIP 0603 1U 10V Y5V -20%+80%	
C1748	065G0603105A7Z	Y	CAP CHIP 0603 1U 10V Y5V -20%+80%	

英华家电维修资料软件专用 购买QQ:505966338

C1747	065G0603105A7Z	Y	CAP CHIP 0603 1U 10V Y5V -20%+80%	
C1724	065G0603105A7Z	Y	CAP CHIP 0603 1U 10V Y5V -20%+80%	
C1721	065G0603105A7Z	Y	CAP CHIP 0603 1U 10V Y5V -20%+80%	
C1718	065G0603105A7Z	Y	CAP CHIP 0603 1U 10V Y5V -20%+80%	
C1715	065G0603105A7Z	Y	CAP CHIP 0603 1U 10V Y5V -20%+80%	
C1234	065G0603105A7Z	Y	CAP CHIP 0603 1U 10V Y5V -20%+80%	
C1233	065G0603105A7Z	Y	CAP CHIP 0603 1U 10V Y5V -20%+80%	
C1759	065G0603105A7Z	Y	CAP CHIP 0603 1U 10V Y5V -20%+80%	
C1762	065G0603105A7Z	Y	CAP CHIP 0603 1U 10V Y5V -20%+80%	
C4262	065G0603105A7Z	Y	CAP CHIP 0603 1U 10V Y5V -20%+80%	
C1629	065G060312031J	Y	CAP CHIP 0603 12P 50V NPO +/-5%	
C1628	065G060312031J	Y	CAP CHIP 0603 12P 50V NPO +/-5%	
C1627	065G060312031J	Y	CAP CHIP 0603 12P 50V NPO +/-5%	
C1626	065G060312031J	Y	CAP CHIP 0603 12P 50V NPO +/-5%	
C1618	065G060312031J	Y	CAP CHIP 0603 12P 50V NPO +/-5%	
C1617	065G060312031J	Y	CAP CHIP 0603 12P 50V NPO +/-5%	
C7122	065G060322131J	3	CAP CHIP 0603 220PF J 50V NPO	
C7138	065G060322131J	3	CAP CHIP 0603 220PF J 50V NPO	
C7122	065G060322131J	Y	CAP CHIP 0603 220P 50V NPO +/-5%	
C7138	065G060322131J	Y	CAP CHIP 0603 220P 50V NPO +/-5%	
C7123	065G060322232K	3	CAP CHIP 0603 2200PF K 50V X7R	
C7139	065G060322232K	3	CAP CHIP 0603 2200PF K 50V X7R	
C7123	065G060322232K	Y	CAP CHIP 0603 2N2 50V X7R +/-10%	
C7139	065G060322232K	Y	CAP CHIP 0603 2N2 50V X7R +/-10%	
C7137	065G060322312K	3	CAP CHIP 0603 22N 16V X7R +/-10%	
C7137	065G060322312K	Y	CAP CHIP 0603 22N 16V X7R +/-10%	
C7141	065G060322412K	3	CAP CHIP 0603 220N 16V X7R +/-10%	
C7121	065G060322412K	3	CAP CHIP 0603 220N 16V X7R +/-10%	
C7141	065G060322412K	Y	CAP CHIP 0603 220N 16V X7R 10%	
C7121	065G060322412K	Y	CAP CHIP 0603 220N 16V X7R 10%	
C6125	065G060322422K	3	CAP CHIP 0603 220N 25V X7R +/-10%	
C6126	065G060322422K	3	CAP CHIP 0603 220N 25V X7R +/-10%	
C6125	065G060322422K	Y	CAP CHIP 0603 0.22UF K 25V X7R	
C6126	065G060322422K	Y	CAP CHIP 0603 0.22UF K 25V X7R	
C1709	065G060322517Z	Y	CAP CHIP 0603 2.2UF Z 16V Y5V	
C1712	065G060322517Z	Y	CAP CHIP 0603 2.2UF Z 16V Y5V	
C1763	065G060322517Z	Y	CAP CHIP 0603 2.2UF Z 16V Y5V	
C1764	065G060322517Z	Y	CAP CHIP 0603 2.2UF Z 16V Y5V	
C1245	065G060322517Z	Y	CAP CHIP 0603 2.2UF Z 16V Y5V	
C1244	065G060322517Z	Y	CAP CHIP 0603 2.2UF Z 16V Y5V	
C4249	065G060327031J	3	CAP CHIP 0603 27PF 50V NPO +/-5%	
C4248	065G060327031J	3	CAP CHIP 0603 27PF 50V NPO +/-5%	
C4248	065G060327031J	Y	CAP CHIP 0603 27P 50V NPO +/-5%	
C4249	065G060327031J	Y	CAP CHIP 0603 27P 50V NPO +/-5%	
C7120	065G060333312K	3	CAP CHIP 0603 33N 16V X7R +/-10%	
C7120	065G060333312K	Y	CAP CHIP 0603 33N 16V X7R +/-10%	
C1226	065G060368232K	Y	CAP CHIP 0603 6N8 50V X7R +/-10%	

英华家电维修资料软件专用 购买QQ:505966338

C1225	065G060368232K	Y	CAP CHIP 0603 6N8 50V X7R +/-10%	
C6124	065G080510432K	Y	CAP CHIP 0805 100N 50V X7R +/-10%	
C6128	065G080510432K	Y	CAP CHIP 0805 100N 50V X7R +/-10%	
C6123	065G080510432K	Y	CAP CHIP 0805 100N 50V X7R +/-10%	
C6140	065G080510522K	3	CAP CHIP 0805 1U 25V X7R +/-10%	
C6139	065G080510522K	3	CAP CHIP 0805 1U 25V X7R +/-10%	
C6135	065G080510522K	3	CAP CHIP 0805 1U 25V X7R +/-10%	
C6134	065G080510522K	3	CAP CHIP 0805 1U 25V X7R +/-10%	
C1237	065G080510522K	3	CAP CHIP 0805 1U 25V X7R +/-10%	
C1238	065G080510522K	3	CAP CHIP 0805 1U 25V X7R +/-10%	
C6110	065G080510522K	3	CAP CHIP 0805 1U 25V X7R +/-10%	
C6111	065G080510522K	3	CAP CHIP 0805 1U 25V X7R +/-10%	
C6119	065G080510522K	3	CAP CHIP 0805 1U 25V X7R +/-10%	
C6120	065G080510522K	3	CAP CHIP 0805 1U 25V X7R +/-10%	
C1237	065G080510522K	Y	CAP CHIP 0805 1UF K 25V X7R	
C1238	065G080510522K	Y	CAP CHIP 0805 1UF K 25V X7R	
C6110	065G080510522K	Y	CAP CHIP 0805 1UF K 25V X7R	
C6111	065G080510522K	Y	CAP CHIP 0805 1UF K 25V X7R	
C6119	065G080510522K	Y	CAP CHIP 0805 1UF K 25V X7R	
C6120	065G080510522K	Y	CAP CHIP 0805 1UF K 25V X7R	
C6134	065G080510522K	Y	CAP CHIP 0805 1UF K 25V X7R	
C6135	065G080510522K	Y	CAP CHIP 0805 1UF K 25V X7R	
C6139	065G080510522K	Y	CAP CHIP 0805 1UF K 25V X7R	
C6140	065G080510522K	Y	CAP CHIP 0805 1UF K 25V X7R	
C1115	065G0805106A5K	3	CHIP 10UF 10V X5R 10%	
C1228	065G0805106A5K	3	CHIP 10UF 10V X5R 10%	
C1257	065G0805106A5K	3	CHIP 10UF 10V X5R 10%	
C1509	065G0805106A5K	3	CHIP 10UF 10V X5R 10%	
C1741	065G0805106A5K	3	CHIP 10UF 10V X5R 10%	
C1743	065G0805106A5K	3	CHIP 10UF 10V X5R 10%	
C1751	065G0805106A5K	3	CHIP 10UF 10V X5R 10%	
C7201	065G0805106A5K	3	CHIP 10UF 10V X5R 10%	
C7119	065G0805106A5K	3	CHIP 10UF 10V X5R 10%	
C4261	065G0805106A5K	3	CHIP 10UF 10V X5R 10%	
C1756	065G0805106A5K	3	CHIP 10UF 10V X5R 10%	
C4228	065G0805106A5K	3	CHIP 10UF 10V X5R 10%	
C4237	065G0805106A5K	3	CHIP 10UF 10V X5R 10%	
C4237	065G0805106A5K	Y	CHIP 10UF 10V X5R 0805(T:1.25+/-0.2MM)	
C4228	065G0805106A5K	Y	CHIP 10UF 10V X5R 0805(T:1.25+/-0.2MM)	
C1756	065G0805106A5K	Y	CHIP 10UF 10V X5R 0805(T:1.25+/-0.2MM)	
C4261	065G0805106A5K	Y	CHIP 10UF 10V X5R 0805(T:1.25+/-0.2MM)	
C7119	065G0805106A5K	Y	CHIP 10UF 10V X5R 0805(T:1.25+/-0.2MM)	
C7201	065G0805106A5K	Y	CHIP 10UF 10V X5R 0805(T:1.25+/-0.2MM)	
C1751	065G0805106A5K	Y	CHIP 10UF 10V X5R 0805(T:1.25+/-0.2MM)	
C1115	065G0805106A5K	Y	CHIP 10UF 10V X5R 0805(T:1.25+/-0.2MM)	
C1228	065G0805106A5K	Y	CHIP 10UF 10V X5R 0805(T:1.25+/-0.2MM)	
C1257	065G0805106A5K	Y	CHIP 10UF 10V X5R 0805(T:1.25+/-0.2MM)	

英华家电维修资料软件专用 购买QQ:505966338

C1509	065G0805106A5K	Y	CHIP 10UF 10V X5R 0805(T:1.25+/-0.2MM)	
C1741	065G0805106A5K	Y	CHIP 10UF 10V X5R 0805(T:1.25+/-0.2MM)	
C1743	065G0805106A5K	Y	CHIP 10UF 10V X5R 0805(T:1.25+/-0.2MM)	
C1608	065G0805106A7Z	3	CAP CHIP 0805 10U 10V Y5V -20~+80%	
C1609	065G0805106A7Z	3	CAP CHIP 0805 10U 10V Y5V -20~+80%	
C1614	065G0805106A7Z	3	CAP CHIP 0805 10U 10V Y5V -20~+80%	
C1615	065G0805106A7Z	3	CAP CHIP 0805 10U 10V Y5V -20~+80%	
C1625	065G0805106A7Z	3	CAP CHIP 0805 10U 10V Y5V -20~+80%	
C1630	065G0805106A7Z	3	CAP CHIP 0805 10U 10V Y5V -20~+80%	
C1608	065G0805106A7Z	Y	CAP CHIP 0805 10UF Z 10V Y5V	
C1609	065G0805106A7Z	Y	CAP CHIP 0805 10UF Z 10V Y5V	
C1614	065G0805106A7Z	Y	CAP CHIP 0805 10UF Z 10V Y5V	
C1615	065G0805106A7Z	Y	CAP CHIP 0805 10UF Z 10V Y5V	
C1625	065G0805106A7Z	Y	CAP CHIP 0805 10UF Z 10V Y5V	
C1630	065G0805106A7Z	Y	CAP CHIP 0805 10UF Z 10V Y5V	
C7110	065G080522422K	3	CAP CHIP 0805 220N 25V X7R -/+ 10%	
C7110	065G080522422K	Y	CAP CHIP 0805 220N 25V X7R -/+ 10%	
C6107	065G080522512K	3	CAP CHIP 0805 2U2 16V X7R +/-10%	
C6106	065G080522512K	3	CAP CHIP 0805 2U2 16V X7R +/-10%	
C6106	065G080522512K	Y	CAP CHIP 0805 2.2UF K 16V X7R	
C6107	065G080522512K	Y	CAP CHIP 0805 2.2UF K 16V X7R	
C7124	065G080533132K	3	CAP CHIP 0805 330P 50V X7R +/-10%	
C7140	065G080533132K	3	CAP CHIP 0805 330P 50V X7R +/-10%	
C7124	065G080533132K	Y	CAP CHIP 0805 330PF K 50V X7R	
C7140	065G080533132K	Y	CAP CHIP 0805 330PF K 50V X7R	
C6101	065G080547437Z	Y	CAP CHIP 0805 0.47UF Z 50V Y5V	
C4263	065G0805475A2K	3	CAP CHIP 4.7UF 10V X7R +/- 10%	
C4415	065G0805475A2K	3	CAP CHIP 4.7UF 10V X7R +/- 10%	
C4418	065G0805475A2K	3	CAP CHIP 4.7UF 10V X7R +/- 10%	
C4263	065G0805475A2K	T	CAP CHIP 4U7 10V X7R 10%	
C4415	065G0805475A2K	T	CAP CHIP 4U7 10V X7R 10%	
C4418	065G0805475A2K	T	CAP CHIP 4U7 10V X7R 10%	
C1774	065G080556131J	Y	CAP CHIP 0805 560P 50V NPO +/-5%	
C1761	065G080556131J	Y	CAP CHIP 0805 560P 50V NPO +/-5%	
C1746	065G080556131J	Y	CAP CHIP 0805 560P 50V NPO +/-5%	
C1739	065G080556131J	Y	CAP CHIP 0805 560P 50V NPO +/-5%	
C1723	065G080556131J	Y	CAP CHIP 0805 560P 50V NPO +/-5%	
C1720	065G080556131J	Y	CAP CHIP 0805 560P 50V NPO +/-5%	
C1717	065G080556131J	Y	CAP CHIP 0805 560P 50V NPO +/-5%	
C1714	065G080556131J	Y	CAP CHIP 0805 560P 50V NPO +/-5%	
C1711	065G080556131J	Y	CAP CHIP 0805 560P 50V NPO +/-5%	
C1708	065G080556131J	Y	CAP CHIP 0805 560P 50V NPO +/-5%	
C1775	065G080556131J	Y	CAP CHIP 0805 560P 50V NPO +/-5%	
C1776	065G080556131J	Y	CAP CHIP 0805 560P 50V NPO +/-5%	
C7158	065G120610612K	3	CHIP 10UF 16V X7R 10%	
C7125	065G120610612K	3	CHIP 10UF 16V X7R 10%	
C7117	065G120610612K	3	CHIP 10UF 16V X7R 10%	

英华家电维修资料软件专用 购买QQ:505966338

C4401	065G120610612K	3	CHIP 10UF 16V X7R 10%	
C4234	065G120610612K	3	CHIP 10UF 16V X7R 10%	
C4231	065G120610612K	3	CHIP 10UF 16V X7R 10%	
C4226	065G120610612K	3	CHIP 10UF 16V X7R 10%	
C4224	065G120610612K	3	CHIP 10UF 16V X7R 10%	
C4222	065G120610612K	3	CHIP 10UF 16V X7R 10%	
C4216	065G120610612K	3	CHIP 10UF 16V X7R 10%	
C4208	065G120610612K	3	CHIP 10UF 16V X7R 10%	
C4206	065G120610612K	3	CHIP 10UF 16V X7R 10%	
C4201	065G120610612K	3	CHIP 10UF 16V X7R 10%	
C1607	065G1206226A7Z	Y	CER 1206 22U 10V Y5V -20%+80%	
C1606	065G1206226A7Z	Y	CER 1206 22U 10V Y5V -20%+80%	
C1605	065G1206226A7Z	Y	CER 1206 22U 10V Y5V -20%+80%	
C6149	065G120647437M	Y	CER 1206 470N 50V Y5V +/-20%	
C6150	065G120647437M	Y	CER 1206 470N 50V Y5V +/-20%	
C6133	065T040210312K	3	CAP CHIP 0402 10N 16V X7R +/-10%	
C6132	065T040210312K	3	CAP CHIP 0402 10N 16V X7R +/-10%	
C6105	065T040210312K	3	CAP CHIP 0402 10N 16V X7R +/-10%	
C6104	065T040210312K	3	CAP CHIP 0402 10N 16V X7R +/-10%	
C4417	065T040210312K	3	CAP CHIP 0402 10N 16V X7R +/-10%	
C4416	065T040210312K	3	CAP CHIP 0402 10N 16V X7R +/-10%	
C1247	065T040210312K	3	CAP CHIP 0402 10N 16V X7R +/-10%	
C1246	065T040210312K	3	CAP CHIP 0402 10N 16V X7R +/-10%	
C1104	065T040210312K	3	CAP CHIP 0402 10N 16V X7R +/-10%	
C4210	065T040210412K	3	CAP CHIP 0402 100N 16V X7R +/-10%	
C4209	065T040210412K	3	CAP CHIP 0402 100N 16V X7R +/-10%	
C4207	065T040210412K	3	CAP CHIP 0402 100N 16V X7R +/-10%	
C4205	065T040210412K	3	CAP CHIP 0402 100N 16V X7R +/-10%	
C4204	065T040210412K	3	CAP CHIP 0402 100N 16V X7R +/-10%	
C4203	065T040210412K	3	CAP CHIP 0402 100N 16V X7R +/-10%	
C4202	065T040210412K	3	CAP CHIP 0402 100N 16V X7R +/-10%	
C1755	065T040210412K	3	CAP CHIP 0402 100N 16V X7R +/-10%	
C1742	065T040210412K	3	CAP CHIP 0402 100N 16V X7R +/-10%	
C1735	065T040210412K	3	CAP CHIP 0402 100N 16V X7R +/-10%	
C1734	065T040210412K	3	CAP CHIP 0402 100N 16V X7R +/-10%	
C4211	065T040210412K	3	CAP CHIP 0402 100N 16V X7R +/-10%	
C4212	065T040210412K	3	CAP CHIP 0402 100N 16V X7R +/-10%	
C4213	065T040210412K	3	CAP CHIP 0402 100N 16V X7R +/-10%	
C4214	065T040210412K	3	CAP CHIP 0402 100N 16V X7R +/-10%	
C4215	065T040210412K	3	CAP CHIP 0402 100N 16V X7R +/-10%	
C4217	065T040210412K	3	CAP CHIP 0402 100N 16V X7R +/-10%	
C4218	065T040210412K	3	CAP CHIP 0402 100N 16V X7R +/-10%	
C4219	065T040210412K	3	CAP CHIP 0402 100N 16V X7R +/-10%	
C4220	065T040210412K	3	CAP CHIP 0402 100N 16V X7R +/-10%	
C4221	065T040210412K	3	CAP CHIP 0402 100N 16V X7R +/-10%	
C4223	065T040210412K	3	CAP CHIP 0402 100N 16V X7R +/-10%	
C4225	065T040210412K	3	CAP CHIP 0402 100N 16V X7R +/-10%	

英华家电维修资料软件专用 购买QQ:505966338

C7106	065T040210412K	3	CAP CHIP 0402 100N 16V X7R +/-10%	
C6142	065T040210412K	3	CAP CHIP 0402 100N 16V X7R +/-10%	
C6141	065T040210412K	3	CAP CHIP 0402 100N 16V X7R +/-10%	
C6115	065T040210412K	3	CAP CHIP 0402 100N 16V X7R +/-10%	
C6114	065T040210412K	3	CAP CHIP 0402 100N 16V X7R +/-10%	
C4414	065T040210412K	3	CAP CHIP 0402 100N 16V X7R +/-10%	
C4413	065T040210412K	3	CAP CHIP 0402 100N 16V X7R +/-10%	
C4412	065T040210412K	3	CAP CHIP 0402 100N 16V X7R +/-10%	
C4410	065T040210412K	3	CAP CHIP 0402 100N 16V X7R +/-10%	
C4409	065T040210412K	3	CAP CHIP 0402 100N 16V X7R +/-10%	
C4408	065T040210412K	3	CAP CHIP 0402 100N 16V X7R +/-10%	
C4407	065T040210412K	3	CAP CHIP 0402 100N 16V X7R +/-10%	
C4406	065T040210412K	3	CAP CHIP 0402 100N 16V X7R +/-10%	
C7306	065T040210412K	3	CAP CHIP 0402 100N 16V X7R +/-10%	
C7302	065T040210412K	3	CAP CHIP 0402 100N 16V X7R +/-10%	
C7301	065T040210412K	3	CAP CHIP 0402 100N 16V X7R +/-10%	
C7164	065T040210412K	3	CAP CHIP 0402 100N 16V X7R +/-10%	
C7163	065T040210412K	3	CAP CHIP 0402 100N 16V X7R +/-10%	
C7160	065T040210412K	3	CAP CHIP 0402 100N 16V X7R +/-10%	
C7159	065T040210412K	3	CAP CHIP 0402 100N 16V X7R +/-10%	
C7157	065T040210412K	3	CAP CHIP 0402 100N 16V X7R +/-10%	
C7133	065T040210412K	3	CAP CHIP 0402 100N 16V X7R +/-10%	
C7131	065T040210412K	3	CAP CHIP 0402 100N 16V X7R +/-10%	
C7118	065T040210412K	3	CAP CHIP 0402 100N 16V X7R +/-10%	
C7114	065T040210412K	3	CAP CHIP 0402 100N 16V X7R +/-10%	
C7113	065T040210412K	3	CAP CHIP 0402 100N 16V X7R +/-10%	
C4250	065T040210412K	3	CAP CHIP 0402 100N 16V X7R +/-10%	
C4246	065T040210412K	3	CAP CHIP 0402 100N 16V X7R +/-10%	
C4244	065T040210412K	3	CAP CHIP 0402 100N 16V X7R +/-10%	
C4243	065T040210412K	3	CAP CHIP 0402 100N 16V X7R +/-10%	
C4242	065T040210412K	3	CAP CHIP 0402 100N 16V X7R +/-10%	
C4241	065T040210412K	3	CAP CHIP 0402 100N 16V X7R +/-10%	
C4240	065T040210412K	3	CAP CHIP 0402 100N 16V X7R +/-10%	
C4239	065T040210412K	3	CAP CHIP 0402 100N 16V X7R +/-10%	
C4238	065T040210412K	3	CAP CHIP 0402 100N 16V X7R +/-10%	
C4235	065T040210412K	3	CAP CHIP 0402 100N 16V X7R +/-10%	
C4232	065T040210412K	3	CAP CHIP 0402 100N 16V X7R +/-10%	
C4229	065T040210412K	3	CAP CHIP 0402 100N 16V X7R +/-10%	
C4227	065T040210412K	3	CAP CHIP 0402 100N 16V X7R +/-10%	
C4405	065T040210412K	3	CAP CHIP 0402 100N 16V X7R +/-10%	
C4404	065T040210412K	3	CAP CHIP 0402 100N 16V X7R +/-10%	
C4403	065T040210412K	3	CAP CHIP 0402 100N 16V X7R +/-10%	
C4402	065T040210412K	3	CAP CHIP 0402 100N 16V X7R +/-10%	
C4271	065T040210412K	3	CAP CHIP 0402 100N 16V X7R +/-10%	
C4260	065T040210412K	3	CAP CHIP 0402 100N 16V X7R +/-10%	
C4259	065T040210412K	3	CAP CHIP 0402 100N 16V X7R +/-10%	
C4258	065T040210412K	3	CAP CHIP 0402 100N 16V X7R +/-10%	

英华家电维修资料软件专用 购买QQ:505966338

C4256	065T040210412K 3	CAP CHIP 0402 100N 16V X7R +/-10%	
C4255	065T040210412K 3	CAP CHIP 0402 100N 16V X7R +/-10%	
C4254	065T040210412K 3	CAP CHIP 0402 100N 16V X7R +/-10%	
C4252	065T040210412K 3	CAP CHIP 0402 100N 16V X7R +/-10%	
C4251	065T040210412K 3	CAP CHIP 0402 100N 16V X7R +/-10%	
C1528	065T040210412K 3	CAP CHIP 0402 100N 16V X7R +/-10%	
C1112	065T040210412K 3	CAP CHIP 0402 100N 16V X7R +/-10%	
C1113	065T040210412K 3	CAP CHIP 0402 100N 16V X7R +/-10%	
C1227	065T040210412K 3	CAP CHIP 0402 100N 16V X7R +/-10%	
C1239	065T040210412K 3	CAP CHIP 0402 100N 16V X7R +/-10%	
C1240	065T040210412K 3	CAP CHIP 0402 100N 16V X7R +/-10%	
C1401	065T040210412K 3	CAP CHIP 0402 100N 16V X7R +/-10%	
C1405	065T040210412K 3	CAP CHIP 0402 100N 16V X7R +/-10%	
C1510	065T040210412K 3	CAP CHIP 0402 100N 16V X7R +/-10%	
C1511	065T040210412K 3	CAP CHIP 0402 100N 16V X7R +/-10%	
C1512	065T040210412K 3	CAP CHIP 0402 100N 16V X7R +/-10%	
C1513	065T040210412K 3	CAP CHIP 0402 100N 16V X7R +/-10%	
C1514	065T040210412K 3	CAP CHIP 0402 100N 16V X7R +/-10%	
C1527	065T040210412K 3	CAP CHIP 0402 100N 16V X7R +/-10%	
C1525	065T040210412K 3	CAP CHIP 0402 100N 16V X7R +/-10%	
C1523	065T040210412K 3	CAP CHIP 0402 100N 16V X7R +/-10%	
C1522	065T040210412K 3	CAP CHIP 0402 100N 16V X7R +/-10%	
C1521	065T040210412K 3	CAP CHIP 0402 100N 16V X7R +/-10%	
C1520	065T040210412K 3	CAP CHIP 0402 100N 16V X7R +/-10%	
C1519	065T040210412K 3	CAP CHIP 0402 100N 16V X7R +/-10%	
C1518	065T040210412K 3	CAP CHIP 0402 100N 16V X7R +/-10%	
C1517	065T040210412K 3	CAP CHIP 0402 100N 16V X7R +/-10%	
C1516	065T040210412K 3	CAP CHIP 0402 100N 16V X7R +/-10%	
C1515	065T040210412K 3	CAP CHIP 0402 100N 16V X7R +/-10%	
C7304	065T040233031J 3	CAP CHIP 0402 33P 50V NPO +/-5%	
C6145	065T040233031J 3	CAP CHIP 0402 33P 50V NPO +/-5%	
C6144	065T040233031J 3	CAP CHIP 0402 33P 50V NPO +/-5%	
C6113	065T040233031J 3	CAP CHIP 0402 33P 50V NPO +/-5%	
C6112	065T040233031J 3	CAP CHIP 0402 33P 50V NPO +/-5%	
C1242	065T040233031J 3	CAP CHIP 0402 33P 50V NPO +/-5%	
C1243	065T040233031J 3	CAP CHIP 0402 33P 50V NPO +/-5%	
C1252	065T040247312K 3	CHIP CAP 47N 16V X7R 10%	
C1223	065T040247312K 3	CHIP CAP 47N 16V X7R 10%	
C1213	065T040247312K 3	CHIP CAP 47N 16V X7R 10%	
C1212	065T040247312K 3	CHIP CAP 47N 16V X7R 10%	
C1211	065T040247312K 3	CHIP CAP 47N 16V X7R 10%	
C1206	065T040247312K 3	CHIP CAP 47N 16V X7R 10%	
C1205	065T040247312K 3	CHIP CAP 47N 16V X7R 10%	
C1204	065T040247312K 3	CHIP CAP 47N 16V X7R 10%	
C1114	065T040247312K 3	CHIP CAP 47N 16V X7R 10%	
C1109	065T040247312K 3	CHIP CAP 47N 16V X7R 10%	
C1253	065T040247312K 3	CHIP CAP 47N 16V X7R 10%	

英华家电维修资料软件专用 购买QQ:505966338

C1254	065T040247312K 3	CHIP CAP 47N 16V X7R 10%	
C1256	065T040247312K 3	CHIP CAP 47N 16V X7R 10%	
C1406	065T040247312K 3	CHIP CAP 47N 16V X7R 10%	
C1407	065T040247312K 3	CHIP CAP 47N 16V X7R 10%	
C1408	065T040247312K 3	CHIP CAP 47N 16V X7R 10%	
C1629	065T060312031J 3	CAP CHIP 0603 12PF J 50V NPO	
C1628	065T060312031J 3	CAP CHIP 0603 12PF J 50V NPO	
C1627	065T060312031J 3	CAP CHIP 0603 12PF J 50V NPO	
C1626	065T060312031J 3	CAP CHIP 0603 12PF J 50V NPO	
C1618	065T060312031J 3	CAP CHIP 0603 12PF J 50V NPO	
C1617	065T060312031J 3	CAP CHIP 0603 12PF J 50V NPO	
C1763	065T060322517Z 3	CAP CHIP 0603 2U2 16V Y5V -20%+80%	
C1764	065T060322517Z 3	CAP CHIP 0603 2U2 16V Y5V -20%+80%	
C1712	065T060322517Z 3	CAP CHIP 0603 2U2 16V Y5V -20%+80%	
C1709	065T060322517Z 3	CAP CHIP 0603 2U2 16V Y5V -20%+80%	
C1245	065T060322517Z 3	CAP CHIP 0603 2U2 16V Y5V -20%+80%	
C1244	065T060322517Z 3	CAP CHIP 0603 2U2 16V Y5V -20%+80%	
C1225	065T060368232K 3	CAP CHIP 0603 6N8 50V X7R +/-10%	
C1226	065T060368232K 3	CAP CHIP 0603 6N8 50V X7R +/-10%	
C6101	065T080547437Z 3	CAP CHIP 0805 470N 50V Y5V -20%+80%	
C4263	065T0805475A2K T	CAP CHIP 0805 4.7UF K 10V X7R	
C4415	065T0805475A2K T	CAP CHIP 0805 4.7UF K 10V X7R	
C4418	065T0805475A2K T	CAP CHIP 0805 4.7UF K 10V X7R	
C4201	065T120610612K Y	CER 1206 10U 16V X7R 10%	
C4206	065T120610612K Y	CER 1206 10U 16V X7R 10%	
C4208	065T120610612K Y	CER 1206 10U 16V X7R 10%	
C4216	065T120610612K Y	CER 1206 10U 16V X7R 10%	
C4222	065T120610612K Y	CER 1206 10U 16V X7R 10%	
C4224	065T120610612K Y	CER 1206 10U 16V X7R 10%	
C4226	065T120610612K Y	CER 1206 10U 16V X7R 10%	
C4231	065T120610612K Y	CER 1206 10U 16V X7R 10%	
C4234	065T120610612K Y	CER 1206 10U 16V X7R 10%	
C4401	065T120610612K Y	CER 1206 10U 16V X7R 10%	
C7117	065T120610612K Y	CER 1206 10U 16V X7R 10%	
C7125	065T120610612K Y	CER 1206 10U 16V X7R 10%	
C7158	065T120610612K Y	CER 1206 10U 16V X7R 10%	
C7132	067G 3111003CT	EC SMD 10UF 16V HV 4X5.5MM	
C7156	067G 3111003CT	EC SMD 10UF 16V HV 4X5.5MM	
C7161	067G 3111003CT	EC SMD 10UF 16V HV 4X5.5MM	
C1241	067G 3114703CT	EC SMD 47UF 16V HV 6.3X5.5MM	
C7161	067T 3111003ET	EC SMD 10UF 16V VEJ 4X5.3MM	
C7156	067T 3111003ET	EC SMD 10UF 16V VEJ 4X5.3MM	
C7132	067T 3111003ET	EC SMD 10UF 16V VEJ 4X5.3MM	
C1241	067T 3114703ET	EC SMD 47UF 16V VEJ 6.3X5.3MM	
FB7112	071G 56121 TA	IND FXD 0805 EMI 100MHZ 120R R	
FB7109	071G 56121 TA	IND FXD 0805 EMI 100MHZ 120R R	
FB7108	071G 56121 TA	IND FXD 0805 EMI 100MHZ 120R R	

英华家电维修资料软件专用 购买QQ:505966338

FB1709	071G 56121 TA	IND FXD 0805 EMI 100MHZ 120R R	
FB1708	071G 56121 TA	IND FXD 0805 EMI 100MHZ 120R R	
FB1601	071G 56121 TA	IND FXD 0805 EMI 100MHZ 120R R	
FB1503	071G 56121 TA	IND FXD 0805 EMI 100MHZ 120R R	
FB1502	071G 56121 TA	IND FXD 0805 EMI 100MHZ 120R R	
FB1501	071G 56121 TA	IND FXD 0805 EMI 100MHZ 120R R	
FB1401	071G 56121 TA	IND FXD 0805 EMI 100MHZ 120R R	
FB1210	071G 56121 TA	IND FXD 0805 EMI 100MHZ 120R R	
FB7114	071G 56121 TA	IND FXD 0805 EMI 100MHZ 120R R	
FB7208	071G 56121 TA	IND FXD 0805 EMI 100MHZ 120R R	
FB7206	071G 56121 TA	IND FXD 0805 EMI 100MHZ 120R R	
FB7205	071G 56121 TA	IND FXD 0805 EMI 100MHZ 120R R	
FB7202	071G 56121 TA	IND FXD 0805 EMI 100MHZ 120R R	
FB7201	071G 56121 TA	IND FXD 0805 EMI 100MHZ 120R R	
FB7119	071G 56121 TA	IND FXD 0805 EMI 100MHZ 120R R	
FB7117	071G 56121 TA	IND FXD 0805 EMI 100MHZ 120R R	
FB7116	071G 56121 TA	IND FXD 0805 EMI 100MHZ 120R R	
FB6104	071G 56K121 TA	CHIP BEAD 120R/6000MA HCB2012KF-121T60	
FB7105	071G 56K121 TA	CHIP BEAD 120R/6000MA HCB2012KF-121T60	
FB7203	071G 56K121 TA	CHIP BEAD 120R/6000MA HCB2012KF-121T60	
FB7204	071G 56K121 TA	CHIP BEAD 120R/6000MA HCB2012KF-121T60	
FB7207	071G 56K121 TA	CHIP BEAD 120R/6000MA HCB2012KF-121T60	
FB1713	071G 59A121 TA	CHIP BEAD 120R/3000MA HCB1608KF-121T30	
FB1712	071G 59A121 TA	CHIP BEAD 120R/3000MA HCB1608KF-121T30	
FB1711	071G 59A121 TA	CHIP BEAD 120R/3000MA HCB1608KF-121T30	
FB1710	071G 59A121 TA	CHIP BEAD 120R/3000MA HCB1608KF-121T30	
FB1707	071G 59A121 TA	CHIP BEAD 120R/3000MA HCB1608KF-121T30	
FB1706	071G 59A121 TA	CHIP BEAD 120R/3000MA HCB1608KF-121T30	
FB1704	071G 59A121 TA	CHIP BEAD 120R/3000MA HCB1608KF-121T30	
FB1703	071G 59A121 TA	CHIP BEAD 120R/3000MA HCB1608KF-121T30	
FB1702	071G 59A121 TA	CHIP BEAD 120R/3000MA HCB1608KF-121T30	
FB1701	071G 59A121 TA	CHIP BEAD 120R/3000MA HCB1608KF-121T30	
FB1209	071G 59A121 TA	CHIP BEAD 120R/3000MA HCB1608KF-121T30	
FB1208	071G 59A121 TA	CHIP BEAD 120R/3000MA HCB1608KF-121T30	
FB4201	071G 59A121 TA	CHIP BEAD 120R/3000MA HCB1608KF-121T30	
FB4403	071G 59A121 TA	CHIP BEAD 120R/3000MA HCB1608KF-121T30	
FB4401	071G 59A121 TA	CHIP BEAD 120R/3000MA HCB1608KF-121T30	
FB4211	071G 59A121 TA	CHIP BEAD 120R/3000MA HCB1608KF-121T30	
FB4210	071G 59A121 TA	CHIP BEAD 120R/3000MA HCB1608KF-121T30	
FB4209	071G 59A121 TA	CHIP BEAD 120R/3000MA HCB1608KF-121T30	
FB4208	071G 59A121 TA	CHIP BEAD 120R/3000MA HCB1608KF-121T30	
FB4207	071G 59A121 TA	CHIP BEAD 120R/3000MA HCB1608KF-121T30	
FB4206	071G 59A121 TA	CHIP BEAD 120R/3000MA HCB1608KF-121T30	
FB4205	071G 59A121 TA	CHIP BEAD 120R/3000MA HCB1608KF-121T30	
FB4204	071G 59A121 TA	CHIP BEAD 120R/3000MA HCB1608KF-121T30	
FB4203	071G 59A121 TA	CHIP BEAD 120R/3000MA HCB1608KF-121T30	
FB4202	071G 59A121 TA	CHIP BEAD 120R/3000MA HCB1608KF-121T30	

英华家电维修资料软件专用 购买QQ:505966338

FB1602	071G 59D121 TA	CHIP BEAD 120R/600MA FCM1608KF-121T06	
FB1229	071G 59K300 TA	CHIP BEAD 0603 30R/700MA TAI-TECH	
FB1228	071G 59K300 TA	CHIP BEAD 0603 30R/700MA TAI-TECH	
FB1215	071G 59K300 TA	CHIP BEAD 0603 30R/700MA TAI-TECH	
FB1214	071G 59K300 TA	CHIP BEAD 0603 30R/700MA TAI-TECH	
FB1213	071G 59K300 TA	CHIP BEAD 0603 30R/700MA TAI-TECH	
FB1212	071G 59K300 TA	CHIP BEAD 0603 30R/700MA TAI-TECH	
FB1211	071G 59K300 TA	CHIP BEAD 0603 30R/700MA TAI-TECH	
FB1207	071G 59K300 TA	CHIP BEAD 0603 30R/700MA TAI-TECH	
FB1206	071G 59K300 TA	CHIP BEAD 0603 30R/700MA TAI-TECH	
FB1205	071G 59K300 TA	CHIP BEAD 0603 30R/700MA TAI-TECH	
FB1204	071G 59K300 TA	CHIP BEAD 0603 30R/700MA TAI-TECH	
FB1203	071G 59K300 TA	CHIP BEAD 0603 30R/700MA TAI-TECH	
FB1202	071G 59K300 TA	CHIP BEAD 0603 30R/700MA TAI-TECH	
FB1201	071G 59K300 TA	CHIP BEAD 0603 30R/700MA TAI-TECH	
FB1402	071G 59K300 TA	CHIP BEAD 0603 30R/700MA TAI-TECH	
FB1403	071G 59K300 TA	CHIP BEAD 0603 30R/700MA TAI-TECH	
FB1404	071G 59K300 TA	CHIP BEAD 0603 30R/700MA TAI-TECH	
CN1601	088G 34019E VD	HDMI HEADER 19P HDM24A-19BM4YN10	
CN1501	088T 340 19 VD	HDMI HEADER 19P V/A	
CN1502	088T 340 19 VD	HDMI HEADER 19P V/A	
CN1601	088T 340 19TNR	HDMI HEADER 19P 5300-519-281-E1	
CN1502	088T 340 19TNS	HDMI HEADER 19P 5300-519-441-72	
CN1501	088T 340 19TNS	HDMI HEADER 19P 5300-519-441-72	
D1401	093G 60230	BAT54C(L43)	
D1501	093G 60230	BAT54C(L43)	
D1502	093G 60230	BAT54C(L43)	
D1503	093G 60230	BAT54C(L43)	
D1504	093G 60230	BAT54C(L43)	
D1505	093G 60230	BAT54C(L43)	
D1601	093G 60230	BAT54C(L43)	
D1401	093G 60505	DIO SIG SM BAT54C(PHSE)R	
D1501	093G 60505	DIO SIG SM BAT54C(PHSE)R	
D1502	093G 60505	DIO SIG SM BAT54C(PHSE)R	
D1503	093G 60505	DIO SIG SM BAT54C(PHSE)R	
D1504	093G 60505	DIO SIG SM BAT54C(PHSE)R	
D1505	093G 60505	DIO SIG SM BAT54C(PHSE)R	
D1601	093G 60505	DIO SIG SM BAT54C(PHSE)R	
ZD1504	093G 64 65 TY	SMD ESD PROTECTER PESD0603-240	
ZD1505	093G 64 65 TY	SMD ESD PROTECTER PESD0603-240	
ZD1506	093G 64 65 TY	SMD ESD PROTECTER PESD0603-240	
ZD1507	093G 64 65 TY	SMD ESD PROTECTER PESD0603-240	
ZD1508	093G 64 65 TY	SMD ESD PROTECTER PESD0603-240	
ZD1509	093G 64 65 TY	SMD ESD PROTECTER PESD0603-240	
ZD1511	093G 64 65 TY	SMD ESD PROTECTER PESD0603-240	
ZD1512	093G 64 65 TY	SMD ESD PROTECTER PESD0603-240	
ZD1513	093G 64 65 TY	SMD ESD PROTECTER PESD0603-240	

英华家电维修资料软件专用 购买QQ:505966338

X4201	093G 22S903 C	CRYSTAL 14M318 18P HC49/S	
ZD6101	093G 39S 47	BZX84C3V6 SOT-23	
ZD1401	093G 39S901 T	DIODE BZX84-C5V6 SOT-23 VISHAY	
ZD1402	093G 39S901 T	DIODE BZX84-C5V6 SOT-23 VISHAY	
ZD1403	093G 39S901 T	DIODE BZX84-C5V6 SOT-23 VISHAY	
ZD1404	093G 39S901 T	DIODE BZX84-C5V6 SOT-23 VISHAY	
ZD1405	093G 39S901 T	DIODE BZX84-C5V6 SOT-23 VISHAY	
ZD1501	093G 39S901 T	DIODE BZX84-C5V6 SOT-23 VISHAY	
ZD1502	093G 39S901 T	DIODE BZX84-C5V6 SOT-23 VISHAY	
ZD1510	093G 39S901 T	DIODE BZX84-C5V6 SOT-23 VISHAY	
ZD1601	093G 39S901 T	DIODE BZX84-C5V6 SOT-23 VISHAY	
ZD7402	093G 39S901 T	DIODE BZX84-C5V6 SOT-23 VISHAY	
ZD7404	093G 39S901 T	DIODE BZX84-C5V6 SOT-23 VISHAY	
ZD7405	093G 39S901 T	DIODE BZX84-C5V6 SOT-23 VISHAY	
ZD7406	093G 39S901 T	DIODE BZX84-C5V6 SOT-23 VISHAY	
ZD7406	093G 39S911 T	DIODE BZX84-C5V6 SOT-23 PHILIPS	
ZD7405	093G 39S911 T	DIODE BZX84-C5V6 SOT-23 PHILIPS	
ZD7404	093G 39S911 T	DIODE BZX84-C5V6 SOT-23 PHILIPS	
ZD7402	093G 39S911 T	DIODE BZX84-C5V6 SOT-23 PHILIPS	
ZD1601	093G 39S911 T	DIODE BZX84-C5V6 SOT-23 PHILIPS	
ZD1510	093G 39S911 T	DIODE BZX84-C5V6 SOT-23 PHILIPS	
ZD1502	093G 39S911 T	DIODE BZX84-C5V6 SOT-23 PHILIPS	
ZD1501	093G 39S911 T	DIODE BZX84-C5V6 SOT-23 PHILIPS	
ZD1405	093G 39S911 T	DIODE BZX84-C5V6 SOT-23 PHILIPS	
ZD1404	093G 39S911 T	DIODE BZX84-C5V6 SOT-23 PHILIPS	
ZD1403	093G 39S911 T	DIODE BZX84-C5V6 SOT-23 PHILIPS	
ZD1402	093G 39S911 T	DIODE BZX84-C5V6 SOT-23 PHILIPS	
ZD1401	093G 39S911 T	DIODE BZX84-C5V6 SOT-23 PHILIPS	
ZD7102	093G 60S801	DIODE SSA34 VISHAY	
ZD7101	093G 60S801	DIODE SSA34 VISHAY	
D1506	093G 64S3PH	BAS32L	
D1507	093G 64S3PH	BAS32L	
D1602	093G 64S3PH	BAS32L	
D7102	093G 64S3PH	BAS32L	
D7104	093G 64S3PH	BAS32L	
D7105	093G 64S3PH	BAS32L	
D1506	093G 64S522SEM	LL4148	
D1507	093G 64S522SEM	LL4148	
D1602	093G 64S522SEM	LL4148	
D7102	093G 64S522SEM	LL4148	
D7104	093G 64S522SEM	LL4148	
D7105	093G 64S522SEM	LL4148	
D7105	093G 64S901 T	DIODE LS4148	
D7104	093G 64S901 T	DIODE LS4148	
D7102	093G 64S901 T	DIODE LS4148	
D1602	093G 64S901 T	DIODE LS4148	
D1507	093G 64S901 T	DIODE LS4148	

英华家电维修资料软件专用 购买QQ:505966338

D1506	093G 64S901 T	DIODE LS4148	
D7101	093G1020 PH	DIODE S1D-E3 VISHAY	
	715G3422 2	TV MAIN-PCB 225X220X1.6MM FR4 1OZ DS	
Q1607	057G 417 18 T	PMBT3904 SOT-23	
Q1606	057G 417 18 T	PMBT3904 SOT-23	
Q1605	057G 417 18 T	PMBT3904 SOT-23	
Q1604	057G 417 18 T	PMBT3904 SOT-23	
Q1603	057G 417 18 T	PMBT3904 SOT-23	
Q1602	057G 417 18 T	PMBT3904 SOT-23	
Q6101	057G 761 15	PDTC114ET SOT23	
Q7102	057G 761 15	PDTC114ET SOT23	
Q7104	057G 761 15	PDTC114ET SOT23	
C6123	065G080510432K F	CAP CHIP 0805 0.1UF K 50V X7R	
C6124	065G080510432K F	CAP CHIP 0805 0.1UF K 50V X7R	
C6128	065G080510432K F	CAP CHIP 0805 0.1UF K 50V X7R	
C1605	065G1206226A7Z T	CAP CHIP 1206 22UF Z 10V Y5V	
C1606	065G1206226A7Z T	CAP CHIP 1206 22UF Z 10V Y5V	
C1607	065G1206226A7Z T	CAP CHIP 1206 22UF Z 10V Y5V	
U4203	070GHDCP500HDC	HDCP CODE	MSTARTV-HDCP
	INTV9L6CMSA3	INVERTER BOARD	
	040G 45762412B	CBPC LABEL	
CN8808	033G8021 2A F	INVTER CONN. 13MM 2P	
CN8807	033G8021 2A F	INVTER CONN. 13MM 2P	
CN8806	033G8021 2A F	INVTER CONN. 13MM 2P	
CN8805	033G8021 2A F	INVTER CONN. 13MM 2P	
CN8804	033G8021 2A F	INVTER CONN. 13MM 2P	
CN8803	033G8021 2A F	INVTER CONN. 13MM 2P	
CN8802	033G8029 3A H	B2P3S-VH	
CN8808	033T8021 2A U	CONN 13.0MM 2P R/A	
CN8807	033T8021 2A U	CONN 13.0MM 2P R/A	
CN8806	033T8021 2A U	CONN 13.0MM 2P R/A	
CN8805	033T8021 2A U	CONN 13.0MM 2P R/A	
CN8804	033T8021 2A U	CONN 13.0MM 2P R/A	
CN8803	033T8021 2A U	CONN 13.0MM 2P R/A	
CN8808	033T8021 2A JS	CONNECTOR 13.0MM 2P (ONLY FOR TESTING)	
CN8803	033T8021 2A JS	CONNECTOR 13.0MM 2P (ONLY FOR TESTING)	
CN8804	033T8021 2A JS	CONNECTOR 13.0MM 2P (ONLY FOR TESTING)	
CN8805	033T8021 2A JS	CONNECTOR 13.0MM 2P (ONLY FOR TESTING)	
CN8806	033T8021 2A JS	CONNECTOR 13.0MM 2P (ONLY FOR TESTING)	
CN8807	033T8021 2A JS	CONNECTOR 13.0MM 2P (ONLY FOR TESTING)	
C8813	065G 6J1006ET	10PF 5% SL 6KV	
C8812	065G 6J1006ET	10PF 5% SL 6KV	
C8811	065G 6J1006ET	10PF 5% SL 6KV	
C8810	065G 6J1006ET	10PF 5% SL 6KV	
C8809	065G 6J1006ET	10PF 5% SL 6KV	
C8808	065G 6J1006ET	10PF 5% SL 6KV	
C8807	065G 6J1006ET	10PF 5% SL 6KV	

英华家电维修资料软件专用 购买QQ:505966338

C8806	065G 6J1006ET	10PF 5% SL 6KV	
C8805	065G 6J1006ET	10PF 5% SL 6KV	
C8804	065G 6J1006ET	10PF 5% SL 6KV	
C8803	065G 6J1006ET	10PF 5% SL 6KV	
C8802	065G 6J1006ET	10PF 5% SL 6KV	
T8801	080GL32T 14 DN	INVERTER X'FMR 182UH TK.6518A.101 VOC	
T8802	080GL32T 14 DN	INVERTER X'FMR 182UH TK.6518A.101 VOC	
T8803	080GL32T 14 DN	INVERTER X'FMR 182UH TK.6518A.101 VOC	
T8804	080GL32T 14 DN	INVERTER X'FMR 182UH TK.6518A.101 VOC	
T8805	080GL32T 14 DN	INVERTER X'FMR 182UH TK.6518A.101 VOC	
T8806	080GL32T 14 DN	INVERTER X'FMR 182UH TK.6518A.101 VOC	
T8807	080GL32T 14 DN	INVERTER X'FMR 182UH TK.6518A.101 VOC	
T8808	080GL32T 14 DN	INVERTER X'FMR 182UH TK.6518A.101 VOC	
T8809	080GL32T 14 DN	INVERTER X'FMR 182UH TK.6518A.101 VOC	
T8810	080GL32T 14 DN	INVERTER X'FMR 182UH TK.6518A.101 VOC	
T8811	080GL32T 14 DN	INVERTER X'FMR 182UH TK.6518A.101 VOC	
T8812	080GL32T 14 DN	INVERTER X'FMR 182UH TK.6518A.101 VOC	
CN8801	095G 825 6D504	HARNESS 6P(SCN)-5P(PLUG) 140MM	
CN8801	095G 825 6J504	HARNESS 6P(SCN)-5P(PLUG) 160MM	
	709T3333 QM001	COMSUPTIVE ASS'Y	
	055G 23524	WELDING FLUX WITHOUT PB	
	Q55G 100625	TIN STICK_LOW ARGENTUM	
R8823	061G0805000	RST CHIP MAX 0R05 1/8W	
R8809	061G0805101	1ST CHIPR 100 OHM +-5% 1/8W	
R8807	061G0805101	1ST CHIPR 100 OHM +-5% 1/8W	
R8806	061G0805101	1ST CHIPR 100 OHM +-5% 1/8W	
R8802	061G0805101	1ST CHIPR 100 OHM +-5% 1/8W	
R8801	061G0805101	1ST CHIPR 100 OHM +-5% 1/8W	
R8822	061G0805102	RST CHIPR 1K OHM +-5% 1/8W	
R8821	061G0805102	RST CHIPR 1K OHM +-5% 1/8W	
R8820	061G0805102	RST CHIPR 1K OHM +-5% 1/8W	
R8819	061G0805102	RST CHIPR 1K OHM +-5% 1/8W	
R8818	061G0805102	RST CHIPR 1K OHM +-5% 1/8W	
R8804	061G0805103	RST CHIPR 10K OHM +-5% 1/8W	
R8808	061G0805104	RST CHIPR 100K OHM +-5% 1/8W	
R8805	061G0805104	RST CHIPR 100K OHM +-5% 1/8W	
R8803	061G0805390 2F	RST CHIPR 39 KOHM +-1% 1/8W	
R8816	061G0805390 2F	RST CHIPR 39 KOHM +-1% 1/8W	
R8815	061G0805511	RST CHIPR 510 OHM +-5% 1/8W	
R8814	061G0805511	RST CHIPR 510 OHM +-5% 1/8W	
R8812	061G0805511	RST CHIPR 510 OHM +-5% 1/8W	
R8811	061G0805511	RST CHIPR 510 OHM +-5% 1/8W	
R8810	061G0805511	RST CHIPR 510 OHM +-5% 1/8W	
R8813	061G08056801FY	RST CHIPR 6.8KOHM +-1% 1/8W YAGEO	
R8817	061G08056801FY	RST CHIPR 6.8KOHM +-1% 1/8W YAGEO	
RJ8801	061G1206000	RST CHIP MAX 0R05 1/4W	
C8819	065G0805102 32	CHIP 1000P 50VX7R 0805	

英华家电维修资料软件专用 购买QQ:505966338

C8818	065G0805102 32	CHIP 1000P 50VX7R 0805
C8801	065G080510232K Y	CAP CHIP 0805 1N 50V X7R +/-10%
C8825	065G080518332K 3	CAP CHIP 0805 18N 50V X7R +/-10%
C8824	065G080518332K 3	CAP CHIP 0805 18N 50V X7R +/-10%
C8823	065G080518332K 3	CAP CHIP 0805 18N 50V X7R +/-10%
C8822	065G080518332K 3	CAP CHIP 0805 18N 50V X7R +/-10%
C8821	065G080518332K 3	CAP CHIP 0805 18N 50V X7R +/-10%
C8820	065G080518332K 3	CAP CHIP 0805 18N 50V X7R +/-10%
C8817	065G080518332K 3	CAP CHIP 0805 18N 50V X7R +/-10%
C8816	065G080518332K 3	CAP CHIP 0805 18N 50V X7R +/-10%
C8815	065G080518332K 3	CAP CHIP 0805 18N 50V X7R +/-10%
C8814	065G080518332K 3	CAP CHIP 0805 18N 50V X7R +/-10%
D8808	093G 64 33	DIO SIG SM BAV99 (PHSE)R
D8809	093G 64 33	DIO SIG SM BAV99 (PHSE)R
D8811	093G 64 33	DIO SIG SM BAV99 (PHSE)R
D8812	093G 64 33	DIO SIG SM BAV99 (PHSE)R
D8813	093G 64 33	DIO SIG SM BAV99 (PHSE)R
D8814	093G 64 33	DIO SIG SM BAV99 (PHSE)R
D8815	093G 64 33	DIO SIG SM BAV99 (PHSE)R
D8817	093G 64 33	DIO SIG SM BAV99 (PHSE)R
D8818	093G 64 33	DIO SIG SM BAV99 (PHSE)R
D8819	093G 64 33	DIO SIG SM BAV99 (PHSE)R
D8819	093G 6433S	DIODE BAV99 SEMTECH
D8818	093G 6433S	DIODE BAV99 SEMTECH
D8817	093G 6433S	DIODE BAV99 SEMTECH
D8815	093G 6433S	DIODE BAV99 SEMTECH
D8814	093G 6433S	DIODE BAV99 SEMTECH
D8813	093G 6433S	DIODE BAV99 SEMTECH
D8812	093G 6433S	DIODE BAV99 SEMTECH
D8811	093G 6433S	DIODE BAV99 SEMTECH
D8809	093G 6433S	DIODE BAV99 SEMTECH
D8808	093G 6433S	DIODE BAV99 SEMTECH
D8822	093G 64S522SEM	LL4148
D8806	093G 3919552T	DIODE MTZJ T-72 5.1B 500MW/5.1V DO-34
D8820	093G 64 1152T	1N4148
D8807	093G 64 1152T	1N4148
D8805	093G 64 1152T	1N4148
D8804	093G 64 1152T	1N4148
D8802	093G 64 1152T	1N4148
D8801	093G 64 1152T	1N4148
D8821	093G 64 1152T	1N4148
D8801	093G 64 1152T PH	SWITCH DIODE 1N4148 BY PHILIPS
D8802	093G 64 1152T PH	SWITCH DIODE 1N4148 BY PHILIPS
D8804	093G 64 1152T PH	SWITCH DIODE 1N4148 BY PHILIPS
D8821	093G 64 1152T PH	SWITCH DIODE 1N4148 BY PHILIPS
D8820	093G 64 1152T PH	SWITCH DIODE 1N4148 BY PHILIPS
D8807	093G 64 1152T PH	SWITCH DIODE 1N4148 BY PHILIPS

英华家电维修资料软件专用 购买QQ:505966338

D8805	093G 64 1152T PH	SWITCH DIODE 1N4148 BY PHILIPS	
J8805	095G 90 23	JUMPER WIRE	
J8804	095G 90 23	JUMPER WIRE	
J8803	095G 90 23	JUMPER WIRE	
J8806	095G 90 23	JUMPER WIRE	
J8807	095G 90 23	JUMPER WIRE	
J8801	095G 90 23	JUMPER WIRE	
J8802	095G 90 23	JUMPER WIRE	
J8808	095G 90 23	JUMPER WIRE	
J8809	095G 90 23	JUMPER WIRE	
J8810	095G 90 23	JUMPER WIRE	
J8811	095G 90 23	JUMPER WIRE	
J8812	095G 90 23	JUMPER WIRE	
J8813	095G 90 23	JUMPER WIRE	
	715G3333 1	POWER-PCB,CEM-1,376*85MM,S/S,T1.6MM	
	709T3333 QA001	COMSUPTIVE ASS'Y	
C8814	065G080518332K Y	CAP CHIP 0805 18NF K 50V X7R	
C8815	065G080518332K Y	CAP CHIP 0805 18NF K 50V X7R	
C8816	065G080518332K Y	CAP CHIP 0805 18NF K 50V X7R	
C8817	065G080518332K Y	CAP CHIP 0805 18NF K 50V X7R	
C8820	065G080518332K Y	CAP CHIP 0805 18NF K 50V X7R	
C8821	065G080518332K Y	CAP CHIP 0805 18NF K 50V X7R	
C8822	065G080518332K Y	CAP CHIP 0805 18NF K 50V X7R	
C8823	065G080518332K Y	CAP CHIP 0805 18NF K 50V X7R	
C8824	065G080518332K Y	CAP CHIP 0805 18NF K 50V X7R	
C8825	065G080518332K Y	CAP CHIP 0805 18NF K 50V X7R	
	709T3333 QS001	COMSUPTIVE ASS'Y	
T8805	S80GL32T14V	TRANSFORMER ASS'Y	
	071FPE13101 05	FP2 EEL13	
	S80GL32T14VZ	TRANSFORMER ASS'Y	
T8806	S80GL32T14V	TRANSFORMER ASS'Y	
	071FPE13101 05	FP2 EEL13	
	S80GL32T14VZ	TRANSFORMER ASS'Y	
T8808	S80GL32T14V	TRANSFORMER ASS'Y	
	071FPE13101 05	FP2 EEL13	
	S80GL32T14VZ	TRANSFORMER ASS'Y	
T8804	S80GL32T14V	TRANSFORMER ASS'Y	
	071FPE13101 05	FP2 EEL13	
	S80GL32T14VZ	TRANSFORMER ASS'Y	
T8807	S80GL32T14V	TRANSFORMER ASS'Y	
	071FPE13101 05	FP2 EEL13	
	S80GL32T14VZ	TRANSFORMER ASS'Y	
T8809	S80GL32T14V	TRANSFORMER ASS'Y	
	071FPE13101 05	FP2 EEL13	
	S80GL32T14VZ	TRANSFORMER ASS'Y	
T8811	S80GL32T14V	TRANSFORMER ASS'Y	
	071FPE13101 05	FP2 EEL13	

英华家电维修资料软件专用 购买QQ:505966338

	S80GL32T14VZ	TRANSFORMER ASS'Y	
T8812	S80GL32T14V	TRANSFORMER ASS'Y	
	071FPE13101 05	FP2 EEL13	
	S80GL32T14VZ	TRANSFORMER ASS'Y	
T8802	S80GL32T14V	TRANSFORMER ASS'Y	
	071FPE13101 05	FP2 EEL13	
	S80GL32T14VZ	TRANSFORMER ASS'Y	
T8810	S80GL32T14V	TRANSFORMER ASS'Y	
	071FPE13101 05	FP2 EEL13	
	S80GL32T14VZ	TRANSFORMER ASS'Y	
T8801	S80GL32T14V	TRANSFORMER ASS'Y	
	071FPE13101 05	FP2 EEL13	
	S80GL32T14VZ	TRANSFORMER ASS'Y	
T8803	S80GL32T14V	TRANSFORMER ASS'Y	
	071FPE13101 05	FP2 EEL13	
	S80GL32T14VZ	TRANSFORMER ASS'Y	
	IRPF9QB5	IR BOARD	
U0202	056G 627A00	LIGHT SENSOR KDR3T03AL 560NM	
U0201	056T 627 33 1	IR 37.9KHZ KSM-603TM2E	
C0206	067G305M101 2C	EC 100UF 10V SK 5X7MM	
LED0201	081G 12 6C GP	LED RED/GREEN	
U0201	P11G0021101	IR-HOLDER	
U0202	P11G0022101	IR-HOLDER	
LED0201	P11G0027101	HOLDER	
CN0101	033G8032 6F HR	CONNECTOR	
Q0202	057G 419513	BC847C	
Q0201	057G 419513	BC847C	
Q0201	057G 477900 T	TRA SIG SM BC847C (KEC0) R	
Q0202	057G 477900 T	TRA SIG SM BC847C (KEC0) R	
R0210	061G0603101 T	RST CHIP 100R 1/10W 5%	
R0210	061G0603101 Y	RST CHIPR 100 OHM +-5% 1/10W YAGEO	
R0211	061G0603102 T	RST CHIP 1K 1/10W 5%	
R0211	061G0603102 Y	RST CHIPR 1KOHM +-5% 1/10W YAGEO	
R0203	061G0603103 T	RST CHIP 10K 1/10W 5%	
R0205	061G0603103 T	RST CHIP 10K 1/10W 5%	
R0208	061G0603103 T	RST CHIP 10K 1/10W 5%	
R0203	061G0603103 Y	RST CHIPR 10KOHM +-5% 1/10W YAGEO	
R0205	061G0603103 Y	RST CHIPR 10KOHM +-5% 1/10W YAGEO	
R0208	061G0603103 Y	RST CHIPR 10KOHM +-5% 1/10W YAGEO	
R0202	061G0603221 T	RST CHIP 220R 1/10W 5%	
R0202	061G0603221 Y	RST CHIPR 220 OHM +-5% 1/10W YAGEO	
R0216	061G0603271 JF	RST CHIPR 270OHM 1/10W FENGHUA	
R0216	061G0603271 JT	RST CHIP 270R 1/10W 5% TZAI YUAN	
R0204	061G0603332 T	RST CHIP 3K3 1/10W 5%	
R0207	061G0603332 T	RST CHIP 3K3 1/10W 5%	
R0207	061G0603332 Y	RST CHIPR 3.3KOHM +-5% 1/10W YAGEO	
R0204	061G0603332 Y	RST CHIPR 3.3KOHM +-5% 1/10W YAGEO	

英华家电维修资料软件专用 购买QQ:505966338

R0209	061G0603561 JT	RST CHIPR 560OHM +-5% 1/10W TZAI YUAN	
C0202	065G060310131J Y	CAP CHIP 0603 100P 50V NPO +/-5%	
C0203	065G060310412K Y	CAP CHIP 0603 100N 16V X7R +/-10%	
C0204	065G060310412K Y	CAP CHIP 0603 100N 16V X7R +/-10%	
C0205	065G060310412K Y	CAP CHIP 0603 100N 16V X7R +/-10%	
C0201	065G0805106A5K 3	CHIP 10UF 10V X5R 10%	
C0201	065G0805106A5K T	CHIP 10UF 10V X5R 0805	
C0202	065T060310131J 3	CAP CHIP 0603 100P 50V NPO +/-5%	
C0203	065T060310412K 3	CAP CHIP 0603 100N 16V X7R +/-10%	
C0204	065T060310412K 3	CAP CHIP 0603 100N 16V X7R +/-10%	
C0205	065T060310412K 3	CAP CHIP 0603 100N 16V X7R +/-10%	
C0201	065T0805106A5K T	CAP CHIP 0805 10UF K 10V X5R	
FB0201	071G 59C601 MR	CHIP BEAD 600R/200MA BLM18AG601SN1D	
FB0202	071G 59C601 MR	CHIP BEAD 600R/200MA BLM18AG601SN1D	
FB0203	071G 59C601 MR	CHIP BEAD 600R/200MA BLM18AG601SN1D	
FB0204	071G 59C601 MR	CHIP BEAD 600R/200MA BLM18AG601SN1D	
FB0205	071G 59C601 MR	CHIP BEAD 600R/200MA BLM18AG601SN1D	
FB0205	071G 59C601 TA	CHIP BEAD 600R/200MA FCM1608K-601T02	
FB0204	071G 59C601 TA	CHIP BEAD 600R/200MA FCM1608K-601T02	
FB0203	071G 59C601 TA	CHIP BEAD 600R/200MA FCM1608K-601T02	
FB0202	071G 59C601 TA	CHIP BEAD 600R/200MA FCM1608K-601T02	
FB0201	071G 59C601 TA	CHIP BEAD 600R/200MA FCM1608K-601T02	
FB0201	071G 59S601 T	CHIP BEAD 600R/500MA MMZ1608S601CT	
FB0202	071G 59S601 T	CHIP BEAD 600R/500MA MMZ1608S601CT	
FB0203	071G 59S601 T	CHIP BEAD 600R/500MA MMZ1608S601CT	
FB0204	071G 59S601 T	CHIP BEAD 600R/500MA MMZ1608S601CT	
FB0205	071G 59S601 T	CHIP BEAD 600R/500MA MMZ1608S601CT	
ZD0201	093G 39S 66	DIO REG SM BZX84-C5V1 (PHSE)R	
ZD0201	093G 39S900 T	DIO REG SM BZX84-C5V1-V(VISH)R	
	715G3401 2	TV IR-PCB FR-4 14.2¡Á64.3¡Á1.6MM DS	
	KEPF9QA2	KEY BOARD T3403-2-X-X-2-090403	
CN0101	033G3802 4 BH F	CONNECTOR	
R0105	061G0603222 T	RST CHIP 2K2 1/10W 5%	
R0106	061G0603222 T	RST CHIP 2K2 1/10W 5%	
R0105	061G0603222 Y	RST CHIPR 2.2KOHM +-5% 1/10W YAGEO	
R0106	061G0603222 Y	RST CHIPR 2.2KOHM +-5% 1/10W YAGEO	
R0102	061G0603471 T	RST CHIP 470R 1/10W 5%	
R0104	061G0603471 T	RST CHIP 470R 1/10W 5%	
R0102	061G0603471 Y	RST CHIPR 470 OHM +-5% 1/10W YAGEO	
R0104	061G0603471 Y	RST CHIPR 470 OHM +-5% 1/10W YAGEO	
R0103	061G0603562 T	RST CHIP 5K6 1/10W 5%	
R0101	061G0603562 T	RST CHIP 5K6 1/10W 5%	
R0103	061G0603562 Y	RST CHIPR 5.6KOHM +-5% 1/10W YAGEO	
R0101	061G0603562 Y	RST CHIPR 5.6KOHM +-5% 1/10W YAGEO	
C0102	065G060310422K T	CAP CHIP 0603 0.1UF K 25V X7R	
C0101	065G060310422K T	CAP CHIP 0603 0.1UF K 25V X7R	
C0103	065G060310422K T	CAP CHIP 0603 0.1UF K 25V X7R	

英华家电维修资料软件专用 购买QQ:505966338

C0102	065G060310422K Y	CAP CHIP 0603 100N 25V X7R +/-10%	
C0103	065G060310422K Y	CAP CHIP 0603 100N 25V X7R +/-10%	
C0101	065G060310422K Y	CAP CHIP 0603 100N 25V X7R +/-10%	
SW0101	077G 603 AI HJ	TACT SWITCH 2PIN	
SW0102	077G 603 AI HJ	TACT SWITCH 2PIN	
SW0103	077G 603 AI HJ	TACT SWITCH 2PIN	
SW0104	077G 603 AI HJ	TACT SWITCH 2PIN	
SW0105	077G 603 AI HJ	TACT SWITCH 2PIN	
SW0106	077G 603 AI HJ	TACT SWITCH 2PIN	
SW0107	077G 603 AI HJ	TACT SWITCH 2PIN	
	715G3403 2	KEY PCB FR2 162×13.5×1.6MM SS	
	P15T0460101	BRACKET_SIDE_AV_CN	
	P15T0497101	BRACKET_IP_TV_RIGHT	
	P15T0501101	BRACKET SUPPORT RIGHT	
	P15T0536101	BRACKET_TOP	
	P15T0537101	BRACKET_LEFT_TOP	
	P15T0538101	BRACKET_VESA	
	P15T0539101	BRACKET_PCB_SUPPORT	
	P15T0540101	BRACKET_BASE	
	P15T0541101	BRACKET_HOLD_TOP	
	P15T0542101	BRACKET_HOLD_TOP	
	P15T0543101	BRACKET_IP_TV	
	040G 45762412B	CBPC LABEL	
CN301	033G3802 6B Y	CONN 6PIN 2.0	
CN701	033G3802 7B Y	CONNECTOR 7P 2.0 DIP	
L301	073T 253916 H	CHOKE COIL 15UH+/-10% 38MOHM DR10*8	
L301	073T 253916 L	CHOKE COIL 15UH+/-10% 38MOHM DR10*8	
L301	073T 253916 LS	CHOKE COIL 15UH+/-10% 38MOHM DR10*8	
J801	088G 342A00 CL	RJ45 CONNECTOR (WITH LED)	
J801	088G 342A00 TN	RJ45 CONNECTOR (WITH LED)	
CN401	088G 350A00 YG	USB CONNECTOR AX2 TYPE USB-202	
C801	067G 3051012CT	EC 100UF 10V KM 5X11MM	
C619	067G 3051012CT	EC 100UF 10V KM 5X11MM	
C533	067G 3051012CT	EC 100UF 10V KM 5X11MM	
C412	067G 3051012CT	EC 100UF 10V KM 5X11MM	
C402	067G 3051012CT	EC 100UF 10V KM 5X11MM	
C321	067G 3051012CT	EC 100UF 10V KM 5X11MM	
C309	067G215Y2212KT	LOW ESR EC 220UF 10V 6.3*11MM	
C533	067T 3051012ET	EC 100UF 10V RGA 5X11MM	
C619	067T 3051012ET	EC 100UF 10V RGA 5X11MM	
C801	067T 3051012ET	EC 100UF 10V RGA 5X11MM	
C402	067T 3051012ET	EC 100UF 10V RGA 5X11MM	
C412	067T 3051012ET	EC 100UF 10V RGA 5X11MM	
C321	067T 3051012ET	EC 100UF 10V RGA 5X11MM	
C321	067T 3051012KT	EC 100UF 10V PF 5X11MM	
C801	067T 3051012KT	EC 100UF 10V PF 5X11MM	
C619	067T 3051012KT	EC 100UF 10V PF 5X11MM	

英华家电维修资料软件专用 购买QQ:505966338

C533	067T 3051012KT	EC 100UF 10V PF 5X11MM	
C412	067T 3051012KT	EC 100UF 10V PF 5X11MM	
C402	067T 3051012KT	EC 100UF 10V PF 5X11MM	
C309	067T215Y2212CT	EC 220UF 10V GL 6.3X11MM	
C304	067T305S4712CT	EC 470UF 10V KW 8X9MM	
U301	056G 133 30AAC	AZ1117H-ADJ-E1	
U402	056G 545900	IC GL852-MNG03 LQFP48	
U301	056G 563922	AME1117ACGTZ	
U301	056G 585 10	IC AP1117ELA-ADJ	
U801	056G 665A27	IC LAN8700C-AEZG	
U501	056G1133 34	M24C02-WMN6TP	
U991	056G1133127	IC HY27UF082G2B-TPCB 2GB TSOP1-48	
U501	056G1133918	IC AT24C02BN-SH-T 8-SOIC	
U603	056G1133939	IC MX25L3205DM2I-12G SOP-8	
U302	056T 563952	IC SC4524BSETRT SO-8	
U601	056T 615 73	IC HY57V281620FTP-6-C 128MB TSOPII-54	
U602	056T 615 73	IC HY57V281620FTP-6-C 128MB TSOPII-54	
U502	056T 643600	IC AP1701FWL	
U401	056T 665918	IC STMPS2171STR SOT23-5L	
U802	056T4LVC 04 P	IC 74LVC04AD SO-14	
R601	061G0603000 T	RST CHIP MAX 0R05 1/10W	
R612	061G0603000 T	RST CHIP MAX 0R05 1/10W	
R704	061G0603000 T	RST CHIP MAX 0R05 1/10W	
R705	061G0603000 T	RST CHIP MAX 0R05 1/10W	
R518	061G0603000 T	RST CHIP MAX 0R05 1/10W	
R508	061G0603000 T	RST CHIP MAX 0R05 1/10W	
R418	061G0603000 T	RST CHIP MAX 0R05 1/10W	
R402	061G0603000 T	RST CHIP MAX 0R05 1/10W	
R409	061G0603000 T	RST CHIP MAX 0R05 1/10W	
R412	061G0603000 T	RST CHIP MAX 0R05 1/10W	
R414	061G0603000 T	RST CHIP MAX 0R05 1/10W	
R402	061G0603000 Y	RST CHIP MAX 0R05 1/10W YAGEO	
R409	061G0603000 Y	RST CHIP MAX 0R05 1/10W YAGEO	
R705	061G0603000 Y	RST CHIP MAX 0R05 1/10W YAGEO	
R704	061G0603000 Y	RST CHIP MAX 0R05 1/10W YAGEO	
R612	061G0603000 Y	RST CHIP MAX 0R05 1/10W YAGEO	
R601	061G0603000 Y	RST CHIP MAX 0R05 1/10W YAGEO	
R518	061G0603000 Y	RST CHIP MAX 0R05 1/10W YAGEO	
R508	061G0603000 Y	RST CHIP MAX 0R05 1/10W YAGEO	
R418	061G0603000 Y	RST CHIP MAX 0R05 1/10W YAGEO	
R414	061G0603000 Y	RST CHIP MAX 0R05 1/10W YAGEO	
R412	061G0603000 Y	RST CHIP MAX 0R05 1/10W YAGEO	
R505	061G06031001FT	RST CHIP 1K 1/10W 1%	
R505	061G06031001FY	RST CHIPR 1KOHM +-1% 1/10W YAGEO	
R308	061G06031002FT	RST CHIP 10K 1/10W 1%	
R308	061G06031002FY	RST CHIPR 10KOHM +-1% 1/10W YAGEO	
R802	061G06031009FT	RST CHIP R 10OHM +/-1% 1/10W	

英华家电维修资料软件专用 购买QQ:505966338

R802	061G06031009FY	RST CHIP R 10OHM +/-1% 1/10W	
R963	061G0603101 T	RST CHIP 100R 1/10W 5%	
R962	061G0603101 T	RST CHIP 100R 1/10W 5%	
R961	061G0603101 T	RST CHIP 100R 1/10W 5%	
R960	061G0603101 T	RST CHIP 100R 1/10W 5%	
R706	061G0603101 T	RST CHIP 100R 1/10W 5%	
R703	061G0603101 T	RST CHIP 100R 1/10W 5%	
R303	061G0603101 T	RST CHIP 100R 1/10W 5%	
R302	061G0603101 T	RST CHIP 100R 1/10W 5%	
R302	061G0603101 Y	RST CHIPR 100 OHM +-5% 1/10W YAGEO	
R303	061G0603101 Y	RST CHIPR 100 OHM +-5% 1/10W YAGEO	
R703	061G0603101 Y	RST CHIPR 100 OHM +-5% 1/10W YAGEO	
R706	061G0603101 Y	RST CHIPR 100 OHM +-5% 1/10W YAGEO	
R960	061G0603101 Y	RST CHIPR 100 OHM +-5% 1/10W YAGEO	
R961	061G0603101 Y	RST CHIPR 100 OHM +-5% 1/10W YAGEO	
R962	061G0603101 Y	RST CHIPR 100 OHM +-5% 1/10W YAGEO	
R963	061G0603101 Y	RST CHIPR 100 OHM +-5% 1/10W YAGEO	
R834	061G0603103 T	RST CHIP 10K 1/10W 5%	
R831	061G0603103 T	RST CHIP 10K 1/10W 5%	
R830	061G0603103 T	RST CHIP 10K 1/10W 5%	
R829	061G0603103 T	RST CHIP 10K 1/10W 5%	
R828	061G0603103 T	RST CHIP 10K 1/10W 5%	
R827	061G0603103 T	RST CHIP 10K 1/10W 5%	
R318	061G0603103 T	RST CHIP 10K 1/10W 5%	
R410	061G0603103 T	RST CHIP 10K 1/10W 5%	
R807	061G0603103 T	RST CHIP 10K 1/10W 5%	
R808	061G0603103 T	RST CHIP 10K 1/10W 5%	
R809	061G0603103 T	RST CHIP 10K 1/10W 5%	
R815	061G0603103 T	RST CHIP 10K 1/10W 5%	
R834	061G0603103 Y	RST CHIPR 10KOHM +-5% 1/10W YAGEO	
R831	061G0603103 Y	RST CHIPR 10KOHM +-5% 1/10W YAGEO	
R830	061G0603103 Y	RST CHIPR 10KOHM +-5% 1/10W YAGEO	
R829	061G0603103 Y	RST CHIPR 10KOHM +-5% 1/10W YAGEO	
R828	061G0603103 Y	RST CHIPR 10KOHM +-5% 1/10W YAGEO	
R827	061G0603103 Y	RST CHIPR 10KOHM +-5% 1/10W YAGEO	
R815	061G0603103 Y	RST CHIPR 10KOHM +-5% 1/10W YAGEO	
R809	061G0603103 Y	RST CHIPR 10KOHM +-5% 1/10W YAGEO	
R808	061G0603103 Y	RST CHIPR 10KOHM +-5% 1/10W YAGEO	
R807	061G0603103 Y	RST CHIPR 10KOHM +-5% 1/10W YAGEO	
R410	061G0603103 Y	RST CHIPR 10KOHM +-5% 1/10W YAGEO	
R318	061G0603103 Y	RST CHIPR 10KOHM +-5% 1/10W YAGEO	
R525	061G0603104 T	RST CHIP 100K 1/10W 5%	
R502	061G0603104 T	RST CHIP 100K 1/10W 5%	
R403	061G0603104 T	RST CHIP 100K 1/10W 5%	
R403	061G0603104 Y	RST CHIPR 100KOHM +-5% 1/10W YAGEO	
R502	061G0603104 Y	RST CHIPR 100KOHM +-5% 1/10W YAGEO	
R525	061G0603104 Y	RST CHIPR 100KOHM +-5% 1/10W YAGEO	

英华家电维修资料软件专用 购买QQ:505966338

R423	061G0603105 T	RST CHIP 1M 1/10W 5%	
R423	061G0603105 Y	RST CHIPR 1MOHM +-5% 1/10W YAGEO	
R314	061G06031200FY	RST CHIPR 120 OHM +-1% 1/10W YAGEO	
R840	061G06031242FT	RST CHIP 12K4 1/10W 1%	
R840	061G06031242FY	RST CHIP 12K4 1/10W 1%	
R888	061G06031500FT	RST CHIP 150R 1/10W 1%	
R888	061G06031500FY	BRST CHIPR 150 OHM +-1% 1/10W YAGEO	
R810	061G0603152 T	RST CHIP 1K5 1/10W 5%	
R811	061G0603152 T	RST CHIP 1K5 1/10W 5%	
R810	061G0603152 Y	RST CHIPR 1.5KOHM +-5% 1/10W YAGEO	
R811	061G0603152 Y	RST CHIPR 1.5KOHM +-5% 1/10W YAGEO	
R422	061G0603153 T	RST CHIP 15K 1/10W 5%	
R421	061G0603153 T	RST CHIP 15K 1/10W 5%	
R420	061G0603153 T	RST CHIP 15K 1/10W 5%	
R419	061G0603153 T	RST CHIP 15K 1/10W 5%	
R415	061G0603153 T	RST CHIP 15K 1/10W 5%	
R408	061G0603153 T	RST CHIP 15K 1/10W 5%	
R407	061G0603153 T	RST CHIP 15K 1/10W 5%	
R401	061G0603153 T	RST CHIP 15K 1/10W 5%	
R422	061G0603153 Y	RST CHIPR 15KOHM +-5% 1/10W YAGEO	
R421	061G0603153 Y	RST CHIPR 15KOHM +-5% 1/10W YAGEO	
R420	061G0603153 Y	RST CHIPR 15KOHM +-5% 1/10W YAGEO	
R419	061G0603153 Y	RST CHIPR 15KOHM +-5% 1/10W YAGEO	
R415	061G0603153 Y	RST CHIPR 15KOHM +-5% 1/10W YAGEO	
R408	061G0603153 Y	RST CHIPR 15KOHM +-5% 1/10W YAGEO	
R407	061G0603153 Y	RST CHIPR 15KOHM +-5% 1/10W YAGEO	
R401	061G0603153 Y	RST CHIPR 15KOHM +-5% 1/10W YAGEO	
R315	061G06032000FT	RST CHIP 200R 1/10W 1%	
R315	061G06032000FY	RST CHIPR 200 OHM +-1% 1/10W YAGEO	
R832	061G0603220 T	RST CHIP 22R 1/10W 5%	
R826	061G0603220 T	RST CHIP 22R 1/10W 5%	
R825	061G0603220 T	RST CHIP 22R 1/10W 5%	
R824	061G0603220 T	RST CHIP 22R 1/10W 5%	
R823	061G0603220 T	RST CHIP 22R 1/10W 5%	
R822	061G0603220 T	RST CHIP 22R 1/10W 5%	
R821	061G0603220 T	RST CHIP 22R 1/10W 5%	
R820	061G0603220 T	RST CHIP 22R 1/10W 5%	
R819	061G0603220 T	RST CHIP 22R 1/10W 5%	
R814	061G0603220 T	RST CHIP 22R 1/10W 5%	
R813	061G0603220 T	RST CHIP 22R 1/10W 5%	
R520	061G0603220 T	RST CHIP 22R 1/10W 5%	
R520	061G0603220 Y	RST CHIPR 22 OHM +-5% 1/10W YAGEO	
R813	061G0603220 Y	RST CHIPR 22 OHM +-5% 1/10W YAGEO	
R814	061G0603220 Y	RST CHIPR 22 OHM +-5% 1/10W YAGEO	
R819	061G0603220 Y	RST CHIPR 22 OHM +-5% 1/10W YAGEO	
R820	061G0603220 Y	RST CHIPR 22 OHM +-5% 1/10W YAGEO	
R821	061G0603220 Y	RST CHIPR 22 OHM +-5% 1/10W YAGEO	

英华家电维修资料软件专用 购买QQ:505966338

R822	061G0603220 Y	RST CHIPR 22 OHM +-5% 1/10W YAGEO	
R823	061G0603220 Y	RST CHIPR 22 OHM +-5% 1/10W YAGEO	
R824	061G0603220 Y	RST CHIPR 22 OHM +-5% 1/10W YAGEO	
R825	061G0603220 Y	RST CHIPR 22 OHM +-5% 1/10W YAGEO	
R826	061G0603220 Y	RST CHIPR 22 OHM +-5% 1/10W YAGEO	
R832	061G0603220 Y	RST CHIPR 22 OHM +-5% 1/10W YAGEO	
R404	061G0603223 T	RST CHIP 22K 1/10W 5%	
R413	061G0603223 T	RST CHIP 22K 1/10W 5%	
R701	061G0603223 T	RST CHIP 22K 1/10W 5%	
R707	061G0603223 T	RST CHIP 22K 1/10W 5%	
R707	061G0603223 Y	RST CHIPR 22KOHM +-5% 1/10W YAGEO	
R701	061G0603223 Y	RST CHIPR 22KOHM +-5% 1/10W YAGEO	
R413	061G0603223 Y	RST CHIPR 22KOHM +-5% 1/10W YAGEO	
R404	061G0603223 Y	RST CHIPR 22KOHM +-5% 1/10W YAGEO	
R507	061G0603229 T	RST CHIP 2R2 1/10W 5%	
R507	061G0603229 Y	RST CHIPR 2.2 OHM +-5% 1/10W YAGEO	
R304	061G06032701FT	RST CHIP 2K7 1/10W 1%	
R304	061G06032701FY	RST CHIPR 2.7KOHM +-1% 1/10W YAGEO	
R835	061G0603271 T	RST CHIP 270R 1/10W 5%	
R836	061G0603271 T	RST CHIP 270R 1/10W 5%	
R835	061G0603271 Y	RST CHIPR 270 OHM +-5% 1/10W YAGEO	
R836	061G0603271 Y	RST CHIPR 270 OHM +-5% 1/10W YAGEO	
R816	061G0603331 T	RST CHIP 330R 1/10W 5%	
R817	061G0603331 T	RST CHIP 330R 1/10W 5%	
R816	061G0603331 Y	RST CHIPR 330 OHM +-5% 1/10W YAGEO	
R817	061G0603331 Y	RST CHIPR 330 OHM +-5% 1/10W YAGEO	
R426	061G0603363 T	RST CHIP 36K 1/10W 5%	
R426	061G0603363 Y	RST CHIP 36K 1/10W 5%	
R833	061G0603390 JT	RST CHIP 39R 1/10W 5% TZAI YUAN	
R838	061G0603390 JT	RST CHIP 39R 1/10W 5% TZAI YUAN	
R838	061G0603390 JY	RST CHIPR 39R +-5% 1/10W YAGEO	
R833	061G0603390 JY	RST CHIPR 39R +-5% 1/10W YAGEO	
R603	061G0603470 T	RST CHIP 47R 1/10W 5%	
R605	061G0603470 T	RST CHIP 47R 1/10W 5%	
R606	061G0603470 T	RST CHIP 47R 1/10W 5%	
R607	061G0603470 T	RST CHIP 47R 1/10W 5%	
R608	061G0603470 T	RST CHIP 47R 1/10W 5%	
R609	061G0603470 T	RST CHIP 47R 1/10W 5%	
R846	061G0603470 T	RST CHIP 47R 1/10W 5%	
R847	061G0603470 T	RST CHIP 47R 1/10W 5%	
R997	061G0603470 T	RST CHIP 47R 1/10W 5%	
R996	061G0603470 T	RST CHIP 47R 1/10W 5%	
R995	061G0603470 T	RST CHIP 47R 1/10W 5%	
R994	061G0603470 T	RST CHIP 47R 1/10W 5%	
R993	061G0603470 T	RST CHIP 47R 1/10W 5%	
R992	061G0603470 T	RST CHIP 47R 1/10W 5%	
R991	061G0603470 T	RST CHIP 47R 1/10W 5%	

英华家电维修资料软件专用 购买QQ:505966338

R853	061G0603470 T	RST CHIP 47R 1/10W 5%	
R852	061G0603470 T	RST CHIP 47R 1/10W 5%	
R851	061G0603470 T	RST CHIP 47R 1/10W 5%	
R850	061G0603470 T	RST CHIP 47R 1/10W 5%	
R849	061G0603470 T	RST CHIP 47R 1/10W 5%	
R848	061G0603470 T	RST CHIP 47R 1/10W 5%	
R847	061G0603470 Y	RST CHIPR 47 OHM +-5% 1/10W YAGEO	
R846	061G0603470 Y	RST CHIPR 47 OHM +-5% 1/10W YAGEO	
R609	061G0603470 Y	RST CHIPR 47 OHM +-5% 1/10W YAGEO	
R608	061G0603470 Y	RST CHIPR 47 OHM +-5% 1/10W YAGEO	
R607	061G0603470 Y	RST CHIPR 47 OHM +-5% 1/10W YAGEO	
R606	061G0603470 Y	RST CHIPR 47 OHM +-5% 1/10W YAGEO	
R605	061G0603470 Y	RST CHIPR 47 OHM +-5% 1/10W YAGEO	
R603	061G0603470 Y	RST CHIPR 47 OHM +-5% 1/10W YAGEO	
R848	061G0603470 Y	RST CHIPR 47 OHM +-5% 1/10W YAGEO	
R997	061G0603470 Y	RST CHIPR 47 OHM +-5% 1/10W YAGEO	
R996	061G0603470 Y	RST CHIPR 47 OHM +-5% 1/10W YAGEO	
R995	061G0603470 Y	RST CHIPR 47 OHM +-5% 1/10W YAGEO	
R994	061G0603470 Y	RST CHIPR 47 OHM +-5% 1/10W YAGEO	
R993	061G0603470 Y	RST CHIPR 47 OHM +-5% 1/10W YAGEO	
R992	061G0603470 Y	RST CHIPR 47 OHM +-5% 1/10W YAGEO	
R991	061G0603470 Y	RST CHIPR 47 OHM +-5% 1/10W YAGEO	
R853	061G0603470 Y	RST CHIPR 47 OHM +-5% 1/10W YAGEO	
R852	061G0603470 Y	RST CHIPR 47 OHM +-5% 1/10W YAGEO	
R851	061G0603470 Y	RST CHIPR 47 OHM +-5% 1/10W YAGEO	
R850	061G0603470 Y	RST CHIPR 47 OHM +-5% 1/10W YAGEO	
R849	061G0603470 Y	RST CHIPR 47 OHM +-5% 1/10W YAGEO	
R424	061G0603472 T	RST CHIP 4K7 1/10W 5%	
R425	061G0603472 T	RST CHIP 4K7 1/10W 5%	
R514	061G0603472 T	RST CHIP 4K7 1/10W 5%	
R516	061G0603472 T	RST CHIP 4K7 1/10W 5%	
R521	061G0603472 T	RST CHIP 4K7 1/10W 5%	
R523	061G0603472 T	RST CHIP 4K7 1/10W 5%	
R524	061G0603472 T	RST CHIP 4K7 1/10W 5%	
R526	061G0603472 T	RST CHIP 4K7 1/10W 5%	
R527	061G0603472 T	RST CHIP 4K7 1/10W 5%	
R530	061G0603472 T	RST CHIP 4K7 1/10W 5%	
R536	061G0603472 T	RST CHIP 4K7 1/10W 5%	
R537	061G0603472 T	RST CHIP 4K7 1/10W 5%	
R538	061G0603472 T	RST CHIP 4K7 1/10W 5%	
R610	061G0603472 T	RST CHIP 4K7 1/10W 5%	
R611	061G0603472 T	RST CHIP 4K7 1/10W 5%	
R841	061G0603472 T	RST CHIP 4K7 1/10W 5%	
R989	061G0603472 T	RST CHIP 4K7 1/10W 5%	
R990	061G0603472 T	RST CHIP 4K7 1/10W 5%	
R999	061G0603472 T	RST CHIP 4K7 1/10W 5%	
R424	061G0603472 Y	RST CHIPR 4.7KOHM +-5% 1/10W YAGEO	

英华家电维修资料软件专用 购买QQ:505966338

R425	061G0603472 Y	RST CHIPR 4.7KOHM +-5% 1/10W YAGEO	
R514	061G0603472 Y	RST CHIPR 4.7KOHM +-5% 1/10W YAGEO	
R516	061G0603472 Y	RST CHIPR 4.7KOHM +-5% 1/10W YAGEO	
R521	061G0603472 Y	RST CHIPR 4.7KOHM +-5% 1/10W YAGEO	
R523	061G0603472 Y	RST CHIPR 4.7KOHM +-5% 1/10W YAGEO	
R524	061G0603472 Y	RST CHIPR 4.7KOHM +-5% 1/10W YAGEO	
R526	061G0603472 Y	RST CHIPR 4.7KOHM +-5% 1/10W YAGEO	
R527	061G0603472 Y	RST CHIPR 4.7KOHM +-5% 1/10W YAGEO	
R530	061G0603472 Y	RST CHIPR 4.7KOHM +-5% 1/10W YAGEO	
R536	061G0603472 Y	RST CHIPR 4.7KOHM +-5% 1/10W YAGEO	
R537	061G0603472 Y	RST CHIPR 4.7KOHM +-5% 1/10W YAGEO	
R538	061G0603472 Y	RST CHIPR 4.7KOHM +-5% 1/10W YAGEO	
R610	061G0603472 Y	RST CHIPR 4.7KOHM +-5% 1/10W YAGEO	
R611	061G0603472 Y	RST CHIPR 4.7KOHM +-5% 1/10W YAGEO	
R841	061G0603472 Y	RST CHIPR 4.7KOHM +-5% 1/10W YAGEO	
R989	061G0603472 Y	RST CHIPR 4.7KOHM +-5% 1/10W YAGEO	
R990	061G0603472 Y	RST CHIPR 4.7KOHM +-5% 1/10W YAGEO	
R999	061G0603472 Y	RST CHIPR 4.7KOHM +-5% 1/10W YAGEO	
R411	061G0603473 T	RST CHIP 47K 1/10W 5%	
R417	061G0603473 T	RST CHIP 47K 1/10W 5%	
R417	061G0603473 Y	RST CHIPR 47KOHM +-5% 1/10W YAGEO	
R411	061G0603473 Y	RST CHIPR 47KOHM +-5% 1/10W YAGEO	
R806	061G06034999FY	RST CHIPR 49.9 OHM +-1% 1/10W YAGEO	
R805	061G06034999FY	RST CHIPR 49.9 OHM +-1% 1/10W YAGEO	
R804	061G06034999FY	RST CHIPR 49.9 OHM +-1% 1/10W YAGEO	
R803	061G06034999FY	RST CHIPR 49.9 OHM +-1% 1/10W YAGEO	
R307	061G0603563 T	RST CHIP 56K 1/10W 5%	
R307	061G0603563 Y	RST CHIPR 56KOHM +-5% 1/10W YAGEO	
R416	061G06036800FT	RST CHIP 680R 1/10W 1%	
R416	061G06036800FY	RST CHIPR 680 OHM +-1% 1/10W YAGEO	
R503	061G06037509FT	RST CHIP 75R 1/10W 1%	
R504	061G06037509FT	RST CHIP 75R 1/10W 1%	
R506	061G06037509FT	RST CHIP 75R 1/10W 1%	
R503	061G06037509FY	RST CHIPR 75 OHM +-1% 1/10W YAGEO	
R504	061G06037509FY	RST CHIPR 75 OHM +-1% 1/10W YAGEO	
R506	061G06037509FY	RST CHIPR 75 OHM +-1% 1/10W YAGEO	
R501	061G06038209FY	RST CHIPR 82 OHM +-1% 1/10W YAGEO	
R309	061G0603822 T	RST CHIP 8K2 1/10W 5%	
R309	061G0603822 Y	RST CHIPR 8.2KOHM +-5% 1/10W YAGEO	
R818	061G0805000 T	RST CHIP MAX 0R05 1/8W	
R818	061G0805000 Y	RST CHIP MAX 0R05 1/8W YAGEO	
R305	061G0805229 T	RST CHIP 2R2 1/8W 5%	
RP612	061T 125470 8P	RST CHIP ARRAY 47R 1/16W 5% 8P4R	
RP610	061T 125470 8P	RST CHIP ARRAY 47R 1/16W 5% 8P4R	
RP608	061T 125470 8P	RST CHIP ARRAY 47R 1/16W 5% 8P4R	
RP607	061T 125470 8P	RST CHIP ARRAY 47R 1/16W 5% 8P4R	
RP606	061T 125470 8P	RST CHIP ARRAY 47R 1/16W 5% 8P4R	

英华家电维修资料软件专用 购买QQ:505966338

RP605	061T 125470 8P	RST CHIP ARRAY 47R 1/16W 5% 8P4R	
RP992	061T 125470 8P	RST CHIP ARRAY 47R 1/16W 5% 8P4R	
RP613	061T 125470 8P	RST CHIP ARRAY 47R 1/16W 5% 8P4R	
RP614	061T 125470 8P	RST CHIP ARRAY 47R 1/16W 5% 8P4R	
RP615	061T 125470 8P	RST CHIP ARRAY 47R 1/16W 5% 8P4R	
RP616	061T 125470 8P	RST CHIP ARRAY 47R 1/16W 5% 8P4R	
RP604	061T 125470 8P	RST CHIP ARRAY 47R 1/16W 5% 8P4R	
RP603	061T 125470 8P	RST CHIP ARRAY 47R 1/16W 5% 8P4R	
RP602	061T 125470 8P	RST CHIP ARRAY 47R 1/16W 5% 8P4R	
RP601	061T 125470 8P	RST CHIP ARRAY 47R 1/16W 5% 8P4R	
RP991	061T 125470 8P	RST CHIP ARRAY 47R 1/16W 5% 8P4R	
R509	061T04024429FT	RST CHIP 44R2 1/16W 1%	
R509	061T04024429FY	RST CHIP 44R2 1/16W 1%	
R314	061T06031200FT	RST CHIP 120R 1/10W 1%	
R803	061T06034999FT	RST CHIP 49R9 1/10W 1%	
R804	061T06034999FT	RST CHIP 49R9 1/10W 1%	
R805	061T06034999FT	RST CHIP 49R9 1/10W 1%	
R806	061T06034999FT	RST CHIP 49R9 1/10W 1%	
R305	061T0805229 Y	RST CHIP 2R2 1/8W 5%	
C708	065G060310131J 3	CAP CHIP 0603 100P 50V NPO +/-5%	
C712	065G060310131J 3	CAP CHIP 0603 100P 50V NPO +/-5%	
C714	065G060310131J 3	CAP CHIP 0603 100P 50V NPO +/-5%	
C708	065G060310131J Y	CAP CHIP 0603 100P 50V NPO +/-5%	
C712	065G060310131J Y	CAP CHIP 0603 100P 50V NPO +/-5%	
C714	065G060310131J Y	CAP CHIP 0603 100P 50V NPO +/-5%	
C993	065G060310221J Y	CAP CHIP 0603 1N 25V NPO +/-5%	
C510	065G060310232K 3	CAP CHIP 0603 1000PF K 50V X7R	
C510	065G060310232K Y	CAP CHIP 0603 1N 50V X7R +/-10%	
C505	065G060310332K 3	CAP CHIP 0603 10N 50V X7R +/-10%	
C637	065G060310332K 3	CAP CHIP 0603 10N 50V X7R +/-10%	
C704	065G060310332K 3	CAP CHIP 0603 10N 50V X7R +/-10%	
C706	065G060310332K 3	CAP CHIP 0603 10N 50V X7R +/-10%	
C804	065G060310332K 3	CAP CHIP 0603 10N 50V X7R +/-10%	
C806	065G060310332K 3	CAP CHIP 0603 10N 50V X7R +/-10%	
C806	065G060310332K Y	CAP CHIP 0603 10N 50V X7R +/-10%	
C804	065G060310332K Y	CAP CHIP 0603 10N 50V X7R +/-10%	
C706	065G060310332K Y	CAP CHIP 0603 10N 50V X7R +/-10%	
C704	065G060310332K Y	CAP CHIP 0603 10N 50V X7R +/-10%	
C637	065G060310332K Y	CAP CHIP 0603 10N 50V X7R +/-10%	
C505	065G060310332K Y	CAP CHIP 0603 10N 50V X7R +/-10%	
C534	065G060310437Z 3	CAP CHIP 0603 0.1UF Z 50V Y5V	
C535	065G060310437Z 3	CAP CHIP 0603 0.1UF Z 50V Y5V	
C532	065G060310437Z 3	CAP CHIP 0603 0.1UF Z 50V Y5V	
C531	065G060310437Z 3	CAP CHIP 0603 0.1UF Z 50V Y5V	
C530	065G060310437Z 3	CAP CHIP 0603 0.1UF Z 50V Y5V	
C529	065G060310437Z 3	CAP CHIP 0603 0.1UF Z 50V Y5V	
C502	065G060310437Z 3	CAP CHIP 0603 0.1UF Z 50V Y5V	

英华家电维修资料软件专用 购买QQ:505966338

C503	065G060310437Z	3	CAP CHIP 0603 0.1UF Z 50V Y5V	
C506	065G060310437Z	3	CAP CHIP 0603 0.1UF Z 50V Y5V	
C514	065G060310437Z	3	CAP CHIP 0603 0.1UF Z 50V Y5V	
C515	065G060310437Z	3	CAP CHIP 0603 0.1UF Z 50V Y5V	
C516	065G060310437Z	3	CAP CHIP 0603 0.1UF Z 50V Y5V	
C517	065G060310437Z	3	CAP CHIP 0603 0.1UF Z 50V Y5V	
C518	065G060310437Z	3	CAP CHIP 0603 0.1UF Z 50V Y5V	
C519	065G060310437Z	3	CAP CHIP 0603 0.1UF Z 50V Y5V	
C520	065G060310437Z	3	CAP CHIP 0603 0.1UF Z 50V Y5V	
C522	065G060310437Z	3	CAP CHIP 0603 0.1UF Z 50V Y5V	
C523	065G060310437Z	3	CAP CHIP 0603 0.1UF Z 50V Y5V	
C524	065G060310437Z	3	CAP CHIP 0603 0.1UF Z 50V Y5V	
C525	065G060310437Z	3	CAP CHIP 0603 0.1UF Z 50V Y5V	
C526	065G060310437Z	3	CAP CHIP 0603 0.1UF Z 50V Y5V	
C527	065G060310437Z	3	CAP CHIP 0603 0.1UF Z 50V Y5V	
C528	065G060310437Z	3	CAP CHIP 0603 0.1UF Z 50V Y5V	
C611	065G060310437Z	3	CAP CHIP 0603 0.1UF Z 50V Y5V	
C612	065G060310437Z	3	CAP CHIP 0603 0.1UF Z 50V Y5V	
C613	065G060310437Z	3	CAP CHIP 0603 0.1UF Z 50V Y5V	
C614	065G060310437Z	3	CAP CHIP 0603 0.1UF Z 50V Y5V	
C617	065G060310437Z	3	CAP CHIP 0603 0.1UF Z 50V Y5V	
C709	065G060310437Z	3	CAP CHIP 0603 0.1UF Z 50V Y5V	
C710	065G060310437Z	3	CAP CHIP 0603 0.1UF Z 50V Y5V	
C810	065G060310437Z	3	CAP CHIP 0603 0.1UF Z 50V Y5V	
C813	065G060310437Z	3	CAP CHIP 0603 0.1UF Z 50V Y5V	
C815	065G060310437Z	3	CAP CHIP 0603 0.1UF Z 50V Y5V	
C817	065G060310437Z	3	CAP CHIP 0603 0.1UF Z 50V Y5V	
C820	065G060310437Z	3	CAP CHIP 0603 0.1UF Z 50V Y5V	
C821	065G060310437Z	3	CAP CHIP 0603 0.1UF Z 50V Y5V	
C822	065G060310437Z	3	CAP CHIP 0603 0.1UF Z 50V Y5V	
C991	065G060310437Z	3	CAP CHIP 0603 0.1UF Z 50V Y5V	
C992	065G060310437Z	3	CAP CHIP 0603 0.1UF Z 50V Y5V	
C999	065G060310437Z	3	CAP CHIP 0603 0.1UF Z 50V Y5V	
C610	065G060310437Z	3	CAP CHIP 0603 0.1UF Z 50V Y5V	
C536	065G060310437Z	3	CAP CHIP 0603 0.1UF Z 50V Y5V	
C537	065G060310437Z	3	CAP CHIP 0603 0.1UF Z 50V Y5V	
C542	065G060310437Z	3	CAP CHIP 0603 0.1UF Z 50V Y5V	
C543	065G060310437Z	3	CAP CHIP 0603 0.1UF Z 50V Y5V	
C544	065G060310437Z	3	CAP CHIP 0603 0.1UF Z 50V Y5V	
C545	065G060310437Z	3	CAP CHIP 0603 0.1UF Z 50V Y5V	
C548	065G060310437Z	3	CAP CHIP 0603 0.1UF Z 50V Y5V	
C549	065G060310437Z	3	CAP CHIP 0603 0.1UF Z 50V Y5V	
C601	065G060310437Z	3	CAP CHIP 0603 0.1UF Z 50V Y5V	
C602	065G060310437Z	3	CAP CHIP 0603 0.1UF Z 50V Y5V	
C603	065G060310437Z	3	CAP CHIP 0603 0.1UF Z 50V Y5V	
C604	065G060310437Z	3	CAP CHIP 0603 0.1UF Z 50V Y5V	
C605	065G060310437Z	3	CAP CHIP 0603 0.1UF Z 50V Y5V	

英华家电维修资料软件专用 购买QQ:505966338

C606	065G060310437Z	3	CAP CHIP 0603 0.1UF Z 50V Y5V	
C607	065G060310437Z	3	CAP CHIP 0603 0.1UF Z 50V Y5V	
C608	065G060310437Z	3	CAP CHIP 0603 0.1UF Z 50V Y5V	
C609	065G060310437Z	3	CAP CHIP 0603 0.1UF Z 50V Y5V	
C501	065G060310437Z	3	CAP CHIP 0603 0.1UF Z 50V Y5V	
C305	065G060310437Z	3	CAP CHIP 0603 0.1UF Z 50V Y5V	
C310	065G060310437Z	3	CAP CHIP 0603 0.1UF Z 50V Y5V	
C318	065G060310437Z	3	CAP CHIP 0603 0.1UF Z 50V Y5V	
C320	065G060310437Z	3	CAP CHIP 0603 0.1UF Z 50V Y5V	
C404	065G060310437Z	3	CAP CHIP 0603 0.1UF Z 50V Y5V	
C406	065G060310437Z	3	CAP CHIP 0603 0.1UF Z 50V Y5V	
C407	065G060310437Z	3	CAP CHIP 0603 0.1UF Z 50V Y5V	
C408	065G060310437Z	3	CAP CHIP 0603 0.1UF Z 50V Y5V	
C409	065G060310437Z	3	CAP CHIP 0603 0.1UF Z 50V Y5V	
C410	065G060310437Z	3	CAP CHIP 0603 0.1UF Z 50V Y5V	
C411	065G060310437Z	3	CAP CHIP 0603 0.1UF Z 50V Y5V	
C429	065G060310437Z	3	CAP CHIP 0603 0.1UF Z 50V Y5V	
C426	065G060310437Z	3	CAP CHIP 0603 0.1UF Z 50V Y5V	
C424	065G060310437Z	3	CAP CHIP 0603 0.1UF Z 50V Y5V	
C423	065G060310437Z	3	CAP CHIP 0603 0.1UF Z 50V Y5V	
C422	065G060310437Z	3	CAP CHIP 0603 0.1UF Z 50V Y5V	
C420	065G060310437Z	3	CAP CHIP 0603 0.1UF Z 50V Y5V	
C417	065G060310437Z	3	CAP CHIP 0603 0.1UF Z 50V Y5V	
C416	065G060310437Z	3	CAP CHIP 0603 0.1UF Z 50V Y5V	
C415	065G060310437Z	3	CAP CHIP 0603 0.1UF Z 50V Y5V	
C414	065G060310437Z	3	CAP CHIP 0603 0.1UF Z 50V Y5V	
C534	065G060310437Z	Y	CAP CHIP 0603 100N 50V Y5V -20%+80%	
C532	065G060310437Z	Y	CAP CHIP 0603 100N 50V Y5V -20%+80%	
C531	065G060310437Z	Y	CAP CHIP 0603 100N 50V Y5V -20%+80%	
C530	065G060310437Z	Y	CAP CHIP 0603 100N 50V Y5V -20%+80%	
C529	065G060310437Z	Y	CAP CHIP 0603 100N 50V Y5V -20%+80%	
C528	065G060310437Z	Y	CAP CHIP 0603 100N 50V Y5V -20%+80%	
C527	065G060310437Z	Y	CAP CHIP 0603 100N 50V Y5V -20%+80%	
C535	065G060310437Z	Y	CAP CHIP 0603 100N 50V Y5V -20%+80%	
C536	065G060310437Z	Y	CAP CHIP 0603 100N 50V Y5V -20%+80%	
C537	065G060310437Z	Y	CAP CHIP 0603 100N 50V Y5V -20%+80%	
C542	065G060310437Z	Y	CAP CHIP 0603 100N 50V Y5V -20%+80%	
C543	065G060310437Z	Y	CAP CHIP 0603 100N 50V Y5V -20%+80%	
C544	065G060310437Z	Y	CAP CHIP 0603 100N 50V Y5V -20%+80%	
C545	065G060310437Z	Y	CAP CHIP 0603 100N 50V Y5V -20%+80%	
C526	065G060310437Z	Y	CAP CHIP 0603 100N 50V Y5V -20%+80%	
C502	065G060310437Z	Y	CAP CHIP 0603 100N 50V Y5V -20%+80%	
C503	065G060310437Z	Y	CAP CHIP 0603 100N 50V Y5V -20%+80%	
C506	065G060310437Z	Y	CAP CHIP 0603 100N 50V Y5V -20%+80%	
C514	065G060310437Z	Y	CAP CHIP 0603 100N 50V Y5V -20%+80%	
C515	065G060310437Z	Y	CAP CHIP 0603 100N 50V Y5V -20%+80%	
C516	065G060310437Z	Y	CAP CHIP 0603 100N 50V Y5V -20%+80%	

英华家电维修资料软件专用 购买QQ:505966338

C517	065G060310437Z	Y	CAP CHIP 0603 100N 50V Y5V -20%+80%	
C518	065G060310437Z	Y	CAP CHIP 0603 100N 50V Y5V -20%+80%	
C519	065G060310437Z	Y	CAP CHIP 0603 100N 50V Y5V -20%+80%	
C520	065G060310437Z	Y	CAP CHIP 0603 100N 50V Y5V -20%+80%	
C522	065G060310437Z	Y	CAP CHIP 0603 100N 50V Y5V -20%+80%	
C523	065G060310437Z	Y	CAP CHIP 0603 100N 50V Y5V -20%+80%	
C524	065G060310437Z	Y	CAP CHIP 0603 100N 50V Y5V -20%+80%	
C525	065G060310437Z	Y	CAP CHIP 0603 100N 50V Y5V -20%+80%	
C614	065G060310437Z	Y	CAP CHIP 0603 100N 50V Y5V -20%+80%	
C617	065G060310437Z	Y	CAP CHIP 0603 100N 50V Y5V -20%+80%	
C709	065G060310437Z	Y	CAP CHIP 0603 100N 50V Y5V -20%+80%	
C710	065G060310437Z	Y	CAP CHIP 0603 100N 50V Y5V -20%+80%	
C810	065G060310437Z	Y	CAP CHIP 0603 100N 50V Y5V -20%+80%	
C813	065G060310437Z	Y	CAP CHIP 0603 100N 50V Y5V -20%+80%	
C815	065G060310437Z	Y	CAP CHIP 0603 100N 50V Y5V -20%+80%	
C817	065G060310437Z	Y	CAP CHIP 0603 100N 50V Y5V -20%+80%	
C820	065G060310437Z	Y	CAP CHIP 0603 100N 50V Y5V -20%+80%	
C821	065G060310437Z	Y	CAP CHIP 0603 100N 50V Y5V -20%+80%	
C822	065G060310437Z	Y	CAP CHIP 0603 100N 50V Y5V -20%+80%	
C991	065G060310437Z	Y	CAP CHIP 0603 100N 50V Y5V -20%+80%	
C992	065G060310437Z	Y	CAP CHIP 0603 100N 50V Y5V -20%+80%	
C999	065G060310437Z	Y	CAP CHIP 0603 100N 50V Y5V -20%+80%	
C613	065G060310437Z	Y	CAP CHIP 0603 100N 50V Y5V -20%+80%	
C548	065G060310437Z	Y	CAP CHIP 0603 100N 50V Y5V -20%+80%	
C549	065G060310437Z	Y	CAP CHIP 0603 100N 50V Y5V -20%+80%	
C601	065G060310437Z	Y	CAP CHIP 0603 100N 50V Y5V -20%+80%	
C602	065G060310437Z	Y	CAP CHIP 0603 100N 50V Y5V -20%+80%	
C603	065G060310437Z	Y	CAP CHIP 0603 100N 50V Y5V -20%+80%	
C604	065G060310437Z	Y	CAP CHIP 0603 100N 50V Y5V -20%+80%	
C605	065G060310437Z	Y	CAP CHIP 0603 100N 50V Y5V -20%+80%	
C606	065G060310437Z	Y	CAP CHIP 0603 100N 50V Y5V -20%+80%	
C607	065G060310437Z	Y	CAP CHIP 0603 100N 50V Y5V -20%+80%	
C608	065G060310437Z	Y	CAP CHIP 0603 100N 50V Y5V -20%+80%	
C609	065G060310437Z	Y	CAP CHIP 0603 100N 50V Y5V -20%+80%	
C610	065G060310437Z	Y	CAP CHIP 0603 100N 50V Y5V -20%+80%	
C611	065G060310437Z	Y	CAP CHIP 0603 100N 50V Y5V -20%+80%	
C612	065G060310437Z	Y	CAP CHIP 0603 100N 50V Y5V -20%+80%	
C501	065G060310437Z	Y	CAP CHIP 0603 100N 50V Y5V -20%+80%	
C305	065G060310437Z	Y	CAP CHIP 0603 100N 50V Y5V -20%+80%	
C310	065G060310437Z	Y	CAP CHIP 0603 100N 50V Y5V -20%+80%	
C318	065G060310437Z	Y	CAP CHIP 0603 100N 50V Y5V -20%+80%	
C320	065G060310437Z	Y	CAP CHIP 0603 100N 50V Y5V -20%+80%	
C404	065G060310437Z	Y	CAP CHIP 0603 100N 50V Y5V -20%+80%	
C406	065G060310437Z	Y	CAP CHIP 0603 100N 50V Y5V -20%+80%	
C407	065G060310437Z	Y	CAP CHIP 0603 100N 50V Y5V -20%+80%	
C408	065G060310437Z	Y	CAP CHIP 0603 100N 50V Y5V -20%+80%	
C409	065G060310437Z	Y	CAP CHIP 0603 100N 50V Y5V -20%+80%	

英华家电维修资料软件专用 购买QQ:505966338

C410	065G060310437Z Y	CAP CHIP 0603 100N 50V Y5V -20%+80%	
C411	065G060310437Z Y	CAP CHIP 0603 100N 50V Y5V -20%+80%	
C414	065G060310437Z Y	CAP CHIP 0603 100N 50V Y5V -20%+80%	
C415	065G060310437Z Y	CAP CHIP 0603 100N 50V Y5V -20%+80%	
C416	065G060310437Z Y	CAP CHIP 0603 100N 50V Y5V -20%+80%	
C417	065G060310437Z Y	CAP CHIP 0603 100N 50V Y5V -20%+80%	
C420	065G060310437Z Y	CAP CHIP 0603 100N 50V Y5V -20%+80%	
C422	065G060310437Z Y	CAP CHIP 0603 100N 50V Y5V -20%+80%	
C423	065G060310437Z Y	CAP CHIP 0603 100N 50V Y5V -20%+80%	
C424	065G060310437Z Y	CAP CHIP 0603 100N 50V Y5V -20%+80%	
C426	065G060310437Z Y	CAP CHIP 0603 100N 50V Y5V -20%+80%	
C429	065G060310437Z Y	CAP CHIP 0603 100N 50V Y5V -20%+80%	
C636	065G060310512K T	CAP CHIP 0603 1UF K 16V X7R	
C636	065G060310512K T	CAP CHIP 0603 1UF K 16V X7R	
C808	065G060312031J Y	CAP CHIP 0603 12P 50V NPO +/-5%	
C900	065G060312031J Y	CAP CHIP 0603 12P 50V NPO +/-5%	
C901	065G060312031J Y	CAP CHIP 0603 12P 50V NPO +/-5%	
C902	065G060312031J Y	CAP CHIP 0603 12P 50V NPO +/-5%	
C811	065G060318031J Y	CAP CHIP 0603 18P 50V NPO +/-5%	
C812	065G060318031J Y	CAP CHIP 0603 18P 50V NPO +/-5%	
C313	065G060322131J 3	CAP CHIP 0603 220PF J 50V NPO	
C313	065G060322131J Y	CAP CHIP 0603 220P 50V NPO +/-5%	
C311	065G060322232K 3	CAP CHIP 0603 2200PF K 50V X7R	
C311	065G060322232K Y	CAP CHIP 0603 2N2 50V X7R +/-10%	
C803	065G060322332K Y	CAP CHIP 0603 22N 50V X7R +/-10%	
C303	065G060322412K 3	CAP CHIP 0603 220N 16V X7R +/-10%	
C303	065G060322412K Y	CAP CHIP 0603 220N 16V X7R 10%	
C511	065G060327031J 3	CAP CHIP 0603 27PF 50V NPO +/-5%	
C512	065G060327031J 3	CAP CHIP 0603 27PF 50V NPO +/-5%	
C511	065G060327031J Y	CAP CHIP 0603 27P 50V NPO +/-5%	
C512	065G060327031J Y	CAP CHIP 0603 27P 50V NPO +/-5%	
C419	065G060330031J 3	CAP CHIP 0603 30PF 50V NPO +/-5%	
C418	065G060330031J 3	CAP CHIP 0603 30PF 50V NPO +/-5%	
C418	065G060330031J Y	CAP CHIP 0603 30PF J 50V NPO	
C419	065G060330031J Y	CAP CHIP 0603 30PF J 50V NPO	
C307	065G060333312K 3	CAP CHIP 0603 33N 16V X7R +/-10%	
C307	065G060333312K Y	CAP CHIP 0603 33N 16V X7R +/-10%	
C308	065G060347031J Y	CAP CHIP 0603 47P 50V NPO +/-5%	
C306	065G060347031J Y	CAP CHIP 0603 47P 50V NPO +/-5%	
C413	065G060347931C 3	CAP CHIP 0603 4P7 50V NPO +/-0.25PF	
C405	065G060347931C 3	CAP CHIP 0603 4P7 50V NPO +/-0.25PF	
C403	065G060347931C 3	CAP CHIP 0603 4P7 50V NPO +/-0.25PF	
C401	065G060347931C 3	CAP CHIP 0603 4P7 50V NPO +/-0.25PF	
C401	065G060347931C Y	CAP CHIP 0603 4P7 50V NPO +/-0.25PF	
C403	065G060347931C Y	CAP CHIP 0603 4P7 50V NPO +/-0.25PF	
C405	065G060347931C Y	CAP CHIP 0603 4P7 50V NPO +/-0.25PF	
C413	065G060347931C Y	CAP CHIP 0603 4P7 50V NPO +/-0.25PF	

英华家电维修资料软件专用 购买QQ:505966338

C998	065G0805106A5K	3	CHIP 10UF 10V X5R 10%	
C819	065G0805106A5K	3	CHIP 10UF 10V X5R 10%	
C816	065G0805106A5K	3	CHIP 10UF 10V X5R 10%	
C814	065G0805106A5K	3	CHIP 10UF 10V X5R 10%	
C618	065G0805106A5K	3	CHIP 10UF 10V X5R 10%	
C547	065G0805106A5K	3	CHIP 10UF 10V X5R 10%	
C541	065G0805106A5K	3	CHIP 10UF 10V X5R 10%	
C540	065G0805106A5K	3	CHIP 10UF 10V X5R 10%	
C539	065G0805106A5K	3	CHIP 10UF 10V X5R 10%	
C521	065G0805106A5K	3	CHIP 10UF 10V X5R 10%	
C513	065G0805106A5K	3	CHIP 10UF 10V X5R 10%	
C507	065G0805106A5K	3	CHIP 10UF 10V X5R 10%	
C504	065G0805106A5K	3	CHIP 10UF 10V X5R 10%	
C428	065G0805106A5K	3	CHIP 10UF 10V X5R 10%	
C427	065G0805106A5K	3	CHIP 10UF 10V X5R 10%	
C425	065G0805106A5K	3	CHIP 10UF 10V X5R 10%	
C421	065G0805106A5K	3	CHIP 10UF 10V X5R 10%	
C319	065G0805106A5K	3	CHIP 10UF 10V X5R 10%	
C302	065G0805106A5K	3	CHIP 10UF 10V X5R 10%	
C301	065G0805106A5K	3	CHIP 10UF 10V X5R 10%	
C998	065G0805106A5K	T	CHIP 10UF 10V X5R 0805	
C819	065G0805106A5K	T	CHIP 10UF 10V X5R 0805	
C816	065G0805106A5K	T	CHIP 10UF 10V X5R 0805	
C814	065G0805106A5K	T	CHIP 10UF 10V X5R 0805	
C618	065G0805106A5K	T	CHIP 10UF 10V X5R 0805	
C547	065G0805106A5K	T	CHIP 10UF 10V X5R 0805	
C541	065G0805106A5K	T	CHIP 10UF 10V X5R 0805	
C540	065G0805106A5K	T	CHIP 10UF 10V X5R 0805	
C539	065G0805106A5K	T	CHIP 10UF 10V X5R 0805	
C521	065G0805106A5K	T	CHIP 10UF 10V X5R 0805	
C513	065G0805106A5K	T	CHIP 10UF 10V X5R 0805	
C507	065G0805106A5K	T	CHIP 10UF 10V X5R 0805	
C504	065G0805106A5K	T	CHIP 10UF 10V X5R 0805	
C428	065G0805106A5K	T	CHIP 10UF 10V X5R 0805	
C427	065G0805106A5K	T	CHIP 10UF 10V X5R 0805	
C425	065G0805106A5K	T	CHIP 10UF 10V X5R 0805	
C421	065G0805106A5K	T	CHIP 10UF 10V X5R 0805	
C301	065G0805106A5K	T	CHIP 10UF 10V X5R 0805	
C302	065G0805106A5K	T	CHIP 10UF 10V X5R 0805	
C319	065G0805106A5K	T	CHIP 10UF 10V X5R 0805	
C998	065G0805106A5K	Y	CHIP 10UF 10V X5R 0805(T:1.25+/-0.2MM)	
C819	065G0805106A5K	Y	CHIP 10UF 10V X5R 0805(T:1.25+/-0.2MM)	
C816	065G0805106A5K	Y	CHIP 10UF 10V X5R 0805(T:1.25+/-0.2MM)	
C814	065G0805106A5K	Y	CHIP 10UF 10V X5R 0805(T:1.25+/-0.2MM)	
C618	065G0805106A5K	Y	CHIP 10UF 10V X5R 0805(T:1.25+/-0.2MM)	
C547	065G0805106A5K	Y	CHIP 10UF 10V X5R 0805(T:1.25+/-0.2MM)	
C541	065G0805106A5K	Y	CHIP 10UF 10V X5R 0805(T:1.25+/-0.2MM)	

英华家电维修资料软件专用 购买QQ:505966338

C540	065G0805106A5K Y	CHIP 10UF 10V X5R 0805(T:1.25+/-0.2MM)
C539	065G0805106A5K Y	CHIP 10UF 10V X5R 0805(T:1.25+/-0.2MM)
C521	065G0805106A5K Y	CHIP 10UF 10V X5R 0805(T:1.25+/-0.2MM)
C513	065G0805106A5K Y	CHIP 10UF 10V X5R 0805(T:1.25+/-0.2MM)
C507	065G0805106A5K Y	CHIP 10UF 10V X5R 0805(T:1.25+/-0.2MM)
C504	065G0805106A5K Y	CHIP 10UF 10V X5R 0805(T:1.25+/-0.2MM)
C428	065G0805106A5K Y	CHIP 10UF 10V X5R 0805(T:1.25+/-0.2MM)
C427	065G0805106A5K Y	CHIP 10UF 10V X5R 0805(T:1.25+/-0.2MM)
C425	065G0805106A5K Y	CHIP 10UF 10V X5R 0805(T:1.25+/-0.2MM)
C421	065G0805106A5K Y	CHIP 10UF 10V X5R 0805(T:1.25+/-0.2MM)
C319	065G0805106A5K Y	CHIP 10UF 10V X5R 0805(T:1.25+/-0.2MM)
C302	065G0805106A5K Y	CHIP 10UF 10V X5R 0805(T:1.25+/-0.2MM)
C301	065G0805106A5K Y	CHIP 10UF 10V X5R 0805(T:1.25+/-0.2MM)
C312	065G080533132K Y	CAP CHIP 0805 330PF K 50V X7R
C809	065G080547505K Y	CAP CHIP 0805 4.7UF K 6.3V X5R
C993	065T060310221J 3	CAP CHIP 0603 1N 25V NPO +/-5%
C808	065T060312031J 3	CAP CHIP 0603 12PF J 50V NPO
C900	065T060312031J 3	CAP CHIP 0603 12PF J 50V NPO
C901	065T060312031J 3	CAP CHIP 0603 12PF J 50V NPO
C902	065T060312031J 3	CAP CHIP 0603 12PF J 50V NPO
C803	065T060322332K 3	CAP CHIP 0603 22NF K 50V X7R
C306	065T060347031J 3	CAP CHIP 0603 47PF 50V NPO +/-5%
C308	065T060347031J 3	CAP CHIP 0603 47PF 50V NPO +/-5%
C802	065T0805335A5K 3	CAP CHIP 3U3 10V X5R +/- 10%
C805	065T0805335A5K 3	CAP CHIP 3U3 10V X5R +/- 10%
C802	065T0805335A5K T	CAP CHIP 0805 3.3UF K 10V X5R
C805	065T0805335A5K T	CAP CHIP 0805 3.3UF K 10V X5R
C809	065T080547505K 3	CHIP 4U7 6V3 X5R 10%
C705	067G 3111003CT	EC SMD 10UF 16V HV 4X5.5MM
C702	067G 3111003CT	EC SMD 10UF 16V HV 4X5.5MM
C705	067T 3111003ET	EC SMD 10UF 16V VEJ 4X5.3MM
C702	067T 3111003ET	EC SMD 10UF 16V VEJ 4X5.3MM
FB403	071G 56121 TA	IND FXD 0805 EMI 100MHZ 120R R
FB402	071G 56121 TA	IND FXD 0805 EMI 100MHZ 120R R
FB302	071G 56121 TA	IND FXD 0805 EMI 100MHZ 120R R
FB303	071G 56K121 TA	CHIP BEAD 120R/6000MA HCB2012KF-121T60
FB301	071G 59A121 TA	CHIP BEAD 120R/3000MA HCB1608KF-121T30
FB401	071G 59A121 TA	CHIP BEAD 120R/3000MA HCB1608KF-121T30
FB404	071G 59A121 TA	CHIP BEAD 120R/3000MA HCB1608KF-121T30
FB501	071G 59A121 TA	CHIP BEAD 120R/3000MA HCB1608KF-121T30
FB502	071G 59A121 TA	CHIP BEAD 120R/3000MA HCB1608KF-121T30
FB503	071G 59A121 TA	CHIP BEAD 120R/3000MA HCB1608KF-121T30
FB504	071G 59A121 TA	CHIP BEAD 120R/3000MA HCB1608KF-121T30
FB505	071G 59A121 TA	CHIP BEAD 120R/3000MA HCB1608KF-121T30
FB506	071G 59A121 TA	CHIP BEAD 120R/3000MA HCB1608KF-121T30
FB507	071G 59A121 TA	CHIP BEAD 120R/3000MA HCB1608KF-121T30
FB601	071G 59A121 TA	CHIP BEAD 120R/3000MA HCB1608KF-121T30

英华家电维修资料软件专用 购买QQ:505966338

FB801	071G 59A121 TA	CHIP BEAD 120R/3000MA HCB1608KF-121T30	
FB802	071G 59A121 TA	CHIP BEAD 120R/3000MA HCB1608KF-121T30	
FB803	071G 59A121 TA	CHIP BEAD 120R/3000MA HCB1608KF-121T30	
FB804	071G 59A121 TA	CHIP BEAD 120R/3000MA HCB1608KF-121T30	
FB805	071G 59A121 TA	CHIP BEAD 120R/3000MA HCB1608KF-121T30	
FB806	071G 59A121 TA	CHIP BEAD 120R/3000MA HCB1608KF-121T30	
FB807	071G 59A121 TA	CHIP BEAD 120R/3000MA HCB1608KF-121T30	
FB701	071G 59K300 TA	CHIP BEAD 0603 30R/700MA TAI-TECH	
FB702	071G 59K300 TA	CHIP BEAD 0603 30R/700MA TAI-TECH	
FB704	071G 59K300 TA	CHIP BEAD 0603 30R/700MA TAI-TECH	
FB705	071G 59K300 TA	CHIP BEAD 0603 30R/700MA TAI-TECH	
FB706	071G 59K300 TA	CHIP BEAD 0603 30R/700MA TAI-TECH	
FB707	071G 59K300 TA	CHIP BEAD 0603 30R/700MA TAI-TECH	
FB708	071G 59K300 TA	CHIP BEAD 0603 30R/700MA TAI-TECH	
FB709	071G 59K300 TA	CHIP BEAD 0603 30R/700MA TAI-TECH	
FB703	071T 56300 TA	CHIP BEAD 30OHM 5000MA HCB2012KF-300T50	
L403	073T 63828 T	CHIP INDUCROR 0U82 10% MLF1608DR82K	
L403	073T 63828 TA	CHIP INDUCROR 0U82 10% FCI1608F-R82K	
D802	081G 63G 2 EL	CHIP LED GREEN 0603	
D801	081G 63G 2 EL	CHIP LED GREEN 0603	
D301	093G 6432V	LL4148-GSO8	
X401	093G 22S918 C	CRYSTAL 12MHZ 20P SMD-49	
X801	093G 22SA06 C	CRYSTAL 50MHZ 12P SMD-49	
ZD301	093G 60S801	DIODE SSA34 VISHAY	
D301	093G 64S522SEM	LL4148	
D301	093G 64S901 T	DIODE LS4148	
X501	093T 22S920 C	CRYSTAL 27MHZ 20P SMD-49	
	715G3459 E	IPTV-PCB FR-4 4-LAYER 150*90*1.6MM	
U503	056G1126903 L	IC AML7238+LICENCE	
	PWTV9L6CMSA5	POWER BOARD G3332-1-AOC-X-1-090527	
	040G 45762412B	CBPC LABEL	
CN802	033G3802 5B Y W	WEAFER	
CN801	033G8029 3A	3PIN (2PIN NC)	
CN902	033T327812D	WAFER 12P PLUG	
CN802	033T3802 5B Y	CONNECTOR	
	051T 6 4503	GLUE_RTV	
IC950	056G 139 7	IC EL817MC M-TYPE	
IC951	056G 139 7	IC EL817MC M-TYPE	
IC970	056G 139 7	IC EL817MC M-TYPE	
IC902	056T 379121	IC STR- A6069H DIP-8	
Q921	057G 761 7	KTD1691P	
C901	063G 10747410V	0.47UF 275VAC ARCO	
C904	063G 10747410V	0.47UF 275VAC ARCO	
C901	063G107K474 US	0.47UF +-10%	
C904	063G107K474 US	0.47UF +-10%	
C910	063G213J105GFA	MPF CAP	
C804	063G213J105GFA	MPF CAP	

英华家电维修资料软件专用 购买QQ:505966338

C801	063G213J105GFA	MPF CAP	
C911	065G 1K103 2E6213	CAP CER 10NF K 1KV	
C925	065G 1K103 2E6213	CAP CER 10NF K 1KV	
C823	065G 1K103 2E6213	CAP CER 10NF K 1KV	
C911	065G 1K103 2E6921	CAP CER 10NF K 1KV Y5U	
C925	065G 1K103 2E6921	CAP CER 10NF K 1KV Y5U	
C823	065G 1K103 2E6921	CAP CER 10NF K 1KV Y5U	
C906	065G306K4712B3	Y1 CAP 470PF +-10% 250VAC CD SERIES	
C905	065G306K4712B3	Y1 CAP 470PF +-10% 250VAC CD SERIES	
C924	065G306M1022B2	1000PF 400VAC/250VAC Y1	
C902	065G306M6812B3	Y1 CAP 680PF +-20% 250VAC CD SERIES	
C903	065G306M6812B3	Y1 CAP 680PF +-20% 250VAC CD SERIES	
C953	067G204V331 3K	CS CAP 330UF 16V 10*12 MM	
C954	067G215A4713KV	EC 470UF 16V M 10*12MM	
C973	067G215A4716HV	EC 470UF M 35V 10*21MM	
C975	067G215A4716HV	EC 470UF M 35V 10*21MM	
C945	067G215A4716HV	EC 470UF M 35V 10*21MM	
C973	067G215A4716KV	EC 470UF 35V M 10*16MM	
C975	067G215A4716KV	EC 470UF 35V M 10*16MM	
C945	067G215A4716KV	EC 470UF 35V M 10*16MM	
C946	067G215P4714KV	LOW ESR EC 470UF M 25V 10*16MM	
C805	067G215P4714KV	LOW ESR EC 470UF M 25V 10*16MM	
C954	067G215Y471 3H	ELCAP 105℃ 470UF M 16V	
C946	067G215Y471 4H	EC CAP 105 度 470UF 25V	
C805	067G215Y471 4H	EC CAP 105 度 470UF 25V	
C920	067T 42Z12115H	EC 120UF M 450V 18*45MM	
C920	067T 42Z12115K	EC 120UF M 450V 18*45MM	
C953	067T204V331 3R	CS CAP 330UF 16V 10*12.5 MM	
L906	073G 174143 L	PFC CHOKE 310UH CC-011384-1	
L906	073G 174143 N	PFC CHOKE 310UH YUVA-1123	
L801	073G 253 91 H	CHOKE COIL	
L950	073G 253 91 H	CHOKE COIL	
L951	073G 253 91 H	CHOKE COIL	
L980	073G 253 91 H	CHOKE COIL	
L980	073G 253 91 L	CHOKE BY LI TA	
L951	073G 253 91 L	CHOKE BY LI TA	
L950	073G 253 91 L	CHOKE BY LI TA	
L801	073G 253 91 L	CHOKE BY LI TA	
L901	073T 174106 L	LINE FILTER 13MH LF-1008108	
L902	073T 174106 L	LINE FILTER 13MH LF-1008108	
L901	073T 174106 DN	LINE FILTER 13MH LK.TF032.A20	
L902	073T 174106 DN	LINE FILTER 13MH LK.TF032.A20	
T801	080GL26T 15 N	X'FMR 840UH MIN YUVA-1094	
T801	080GL26T 15 N1	X'FMR 840UH MIN	
T802	080GL32T 15 L	X'FMR 6MH CC-011225-1	
T802	080GL32T 15 N	X'FMR 6MH YUVA-1098	
T902	080GL37T 19 L	X'FMR 550UH 5% PT-010923-3	

英华家电维修资料软件专用 购买QQ:505966338

T902	080GL37T 19 N	X'FMR 550UH 5% YUVA-1089	
T901	080GL52T 5 L	X'FMR 1.0MH PT-009817	
T901	080GL52T 5 N	X'FMR 1.0MH YUVA-1068	
T901	080GL52T 5 N1	X'FMR 1.0MH	
F901	084G 41 11 L	FUSE 5A 250V	
CN901	087G 501 47 S	AC SOCKET 2PIN + 2 SCREW HOLE	
D904	093G 52 70 1	1N5408-E(SHORT PIN) 3A/1000V DO-201AD	
D904	093G 5255L52T	DIDOE 1N5408-E3/73 3A/1000V DO-201AD	
	0Q1G 340 8106 CR3	SCREW	
	705TQ857022	Q901 ASS'Y	
Q901	057G 667 24	STP20NM60FP TO-220FP ST	
	0M1G1730 8120	SCREW	
HS2	Q90T0095 2	HEAT SINK	
	705TQ857023	Q903 ASS'Y	
Q903	057G 667 21	STP10NK70ZFP	
	0M1G1730 8120	SCREW	
HS3	Q90T6084 6	HEAT SINK	
	705TQ857024	Q801/Q802 ASS'Y	
Q801	057G 667 49	FET 2SK4086LS 11.5A/600V TO-220FI(LS)	
Q802	057G 667 49	FET 2SK4086LS 11.5A/600V TO-220FI(LS)	
Q802	057T 667 59	MOSFET FQPF12N60C 12A/600V TO-220F	
Q801	057T 667 59	MOSFET FQPF12N60C 12A/600V TO-220F	
	0M1G1730 10120	SCREW 42A9930016	
HS8	Q90T0087 2	HEAT SINK	
	705TQ861011	NR901 ASS'Y	
NR901	061T 58030 WL	RST NTCR 3 OHM +-20% 5A THINKING	
	Q09T 203 8	PIN FOR NR901	
	705TQ893054	BD901 ASS'Y	
BD901	093G 50460 18	D10XB60	
	0M1G1730 10120	SCREW 42A9930016	
HS1	P90T0027301	HEAT SINK	
	705TQ893055	D950 ASS'Y	
HS5	090G6084 1	HEAT SINK	
D950	093G 60298	DIODE SBT15006JST 15A/60V TO-220ML(LS)	
D950	093G1506 2	FMW-2156	
	0M1G1730 8120	SCREW	
	705TQ893056	D902 ASS'Y	
D902	093G 52 56	DIODE FMN-1106S 10A/600V TO-220	
	0M1G1730 8120	SCREW	
HS6	Q90G6084 3	HEAT SINK	
	705TQ893057	D972 ASS'Y	
HS7	090G6064 1	HEAT SINK	
D970	093G 60282	DIODE SP20100R TO-220FP	
D972	093G 60282	DIODE SP20100R TO-220FP	
D970	093G 60300	DIODE SBR20010JST 20A/100V TO-220ML(LS)	
D972	093G 60300	DIODE SBR20010JST 20A/100V TO-220ML(LS)	
	0M1G1730 8120	SCREW	

英华家电维修资料软件专用 购买QQ:505966338

	709T3332 QM001	COMSUPTIVE ASS'Y	
	055G 23524	WELDING FLUX WITHOUT PB	
	Q51G 6 4509	GLUE_RTV	
	Q55G 100625	TIN STICK_LOW ARGENTUM	
IC901	056G 368 12	IC FAN7529MX SOP-8	
IC801	056T 379122	IC OZ9976GN-C-0-TR SOP-16	
IC903	056T 379133	IC LD7523A GS SOP-8	
Q970	057G 417 4	PMBS3904/PHILIPS-SMT(04)	
Q950	057G 417 4	PMBS3904/PHILIPS-SMT(04)	
Q805	057G 417 4	PMBS3904/PHILIPS-SMT(04)	
Q804	057G 417 4	PMBS3904/PHILIPS-SMT(04)	
Q803	057G 759 2	RK7002FD5T116 SOT-23 BY ROHM	
Q924	057G 760 5	DTC144WKA BY ROHM SMT	
R913	061G0805100	RST CHIPR 10 OHM +-5% 1/8W	
R959	061G0805100 3F	RST CHIPR 100KOHM +-1% 1/8W	
R829	061G0805100 4F	RST CHIPR 1 MOHM +-1% 1/8W	
R831	061G0805100 4F	RST CHIPR 1 MOHM +-1% 1/8W	
R981	061G0805101	1ST CHIPR 100 OHM +-5% 1/8W	
R803	061G0805101	1ST CHIPR 100 OHM +-5% 1/8W	
R802	061G0805101	1ST CHIPR 100 OHM +-5% 1/8W	
R817	061G0805102	RST CHIPR 1K OHM +-5% 1/8W	
R955	061G0805102	RST CHIPR 1K OHM +-5% 1/8W	
R956	061G0805102	RST CHIPR 1K OHM +-5% 1/8W	
R982	061G0805102	RST CHIPR 1K OHM +-5% 1/8W	
R983	061G0805102	RST CHIPR 1K OHM +-5% 1/8W	
R989	061G0805102	RST CHIPR 1K OHM +-5% 1/8W	
R804	061G0805103	RST CHIPR 10K OHM +-5% 1/8W	
R821	061G0805103	RST CHIPR 10K OHM +-5% 1/8W	
R914	061G0805103	RST CHIPR 10K OHM +-5% 1/8W	
R918	061G0805103	RST CHIPR 10K OHM +-5% 1/8W	
R944	061G0805103	RST CHIPR 10K OHM +-5% 1/8W	
R947	061G0805103	RST CHIPR 10K OHM +-5% 1/8W	
R963	061G0805103	RST CHIPR 10K OHM +-5% 1/8W	
R810	061G0805104	RST CHIPR 100K OHM +-5% 1/8W	
R820	061G0805104	RST CHIPR 100K OHM +-5% 1/8W	
R928	061G0805104	RST CHIPR 100K OHM +-5% 1/8W	
R819	061G0805105	RST CHIPR 1M OHM +-5% 1/8W	
R808	061G0805105	RST CHIPR 1M OHM +-5% 1/8W	
R932	061G0805109	RST CHIPR 1 OHM +-5% 1/8W	
R933	061G0805109	RST CHIPR 1 OHM +-5% 1/8W	
R818	061G0805120 1F	RST CHIP 1K2 /8W 1%	
R923	061G0805130 2F	RST CHIP 13K 1/8W 1%	
R812	061G0805154	RST CHIPR 150KOHM +-5% 1/8W	
R811	061G0805155	RST CHIPR 1.5 MOHM +-5% 1/8W	
R979	061G0805200 1F	RST CHIPR 2 KOHM +-1% 1/8W	
R964	061G0805202	RST CHIPR 2K OHM +-5% 1/8W	
R943	061G0805220	RST CHIPR 22 OHM +-5% 1/8W	

英华家电维修资料软件专用 购买QQ:505966338

R826	061G0805240 0F	RST CHIPR 240 OHM +-1% 1/8W	
R978	061G0805240 2F	RST CHIPR 24 KOHM +-1% 1/8W	
R807	061G0805244	RST CHIPR 240 KOHM +-5% 1/8W	
R987	061G0805270 2F	RST CHIPR 27 KOHM +-1% 1/8W	
R806	061G0805335	3.3M 0805	
R985	061G0805362 JF	RST CHIPR 3K6 +-5% 1/8W FENGHUA	
R975	061G0805392	3.9 KOHM 1/10W	
R915	061G0805470 0F	RST CHIPR 470 OHM +-1% 1/8W	
R938	061G0805472	RST CHIPR 4.7 KOHM +-5% 1/8W	
R937	061G0805472	RST CHIPR 4.7 KOHM +-5% 1/8W	
R816	061G0805510	RST CHIPR 51 OHM +-5% 1/8W	
R824	061G0805510 0F	RST CHIPR 510 OHM +-1% 1/8W	
R827	061G0805510 0F	RST CHIPR 510 OHM +-1% 1/8W	
R814	061G0805513	RST CHIPR 51K OHM +-5% 1/8W	
R917	061G0805563	RST CHIPR 56K OHM +-5% 1/8W	
R906	061G0805564	RST CHIPR 560 KOHM +-5% 1/8W	
R805	061G0805620 2F	RST CHIPR 62 KOHM +-1% 1/8W	
R830	061G0805683	RST CHIPR 68K OHM +-5% 1/8W	
R828	061G0805683	RST CHIPR 68K OHM +-5% 1/8W	
R957	061G0805820 1F	RST CHIPR 8.2KOHM +-1% 1/8W	
R958	061G0805820 1F	RST CHIPR 8.2KOHM +-1% 1/8W	
JR902	061G1206000	RST CHIP MAX 0R05 1/4W	
JR901	061G1206000	RST CHIP MAX 0R05 1/4W	
JR805	061G1206000	RST CHIP MAX 0R05 1/4W	
JR804	061G1206000	RST CHIP MAX 0R05 1/4W	
JR803	061G1206000	RST CHIP MAX 0R05 1/4W	
JR802	061G1206000	RST CHIP MAX 0R05 1/4W	
JR801	061G1206000	RST CHIP MAX 0R05 1/4W	
JP907	061G1206000	RST CHIP MAX 0R05 1/4W	
JR903	061G1206000	RST CHIP MAX 0R05 1/4W	
JR904	061G1206000	RST CHIP MAX 0R05 1/4W	
JR905	061G1206000	RST CHIP MAX 0R05 1/4W	
JR906	061G1206000	RST CHIP MAX 0R05 1/4W	
R926	061G1206100 4F	RST CHIPR 1 MOHM +-1% 1/4W	
R925	061G1206100 4F	RST CHIPR 1 MOHM +-1% 1/4W	
R924	061G1206100 4F	RST CHIPR 1 MOHM +-1% 1/4W	
R973	061G1206101	RST CHIPR 100 OHM +-5% 1/4W	
R970	061G1206101	RST CHIPR 100 OHM +-5% 1/4W	
R951	061G1206101	RST CHIPR 100 OHM +-5% 1/4W	
R977	061G1206101	RST CHIPR 100 OHM +-5% 1/4W	
R935	061G1206102	RST CHIPR 1K OHM +-5% 1/4W	
R945	061G1206102	RST CHIPR 1K OHM +-5% 1/4W	
R976	061G1206103	RST CHIPR 10K OHM +-5% 1/4W	
R941	061G1206103	RST CHIPR 10K OHM +-5% 1/4W	
R939	061G1206103	RST CHIPR 10K OHM +-5% 1/4W	
R929	061G1206103	RST CHIPR 10K OHM +-5% 1/4W	
R833	061G1206103	RST CHIPR 10K OHM +-5% 1/4W	

英华家电维修资料软件专用 购买QQ:505966338

R832	061G1206103	RST CHIPR 10K OHM +-5% 1/4W	
R991	061G1206104	RST CHIPR 100 KOHM +-5% 1/4W	
R992	061G1206104	RST CHIPR 100 KOHM +-5% 1/4W	
R993	061G1206104	RST CHIPR 100 KOHM +-5% 1/4W	
R994	061G1206104	RST CHIPR 100 KOHM +-5% 1/4W	
R996	061G1206104	RST CHIPR 100 KOHM +-5% 1/4W	
R997	061G1206104	RST CHIPR 100 KOHM +-5% 1/4W	
R998	061G1206104	RST CHIPR 100 KOHM +-5% 1/4W	
R999	061G1206104	RST CHIPR 100 KOHM +-5% 1/4W	
R904	061G1206155	RST CHIPR 1.5 MOHM +-5% 1/4W	
R905	061G1206155	RST CHIPR 1.5 MOHM +-5% 1/4W	
R909	061G1206155	RST CHIPR 1.5 MOHM +-5% 1/4W	
R965	061G1206182	RST CHIPR 1.8 KOHM +-5% 1/4W	
R967	061G1206182	RST CHIPR 1.8 KOHM +-5% 1/4W	
R971	061G1206182	RST CHIPR 1.8 KOHM +-5% 1/4W	
R972	061G1206182	RST CHIPR 1.8 KOHM +-5% 1/4W	
R986	061G1206182	RST CHIPR 1.8 KOHM +-5% 1/4W	
R988	061G1206182	RST CHIPR 1.8 KOHM +-5% 1/4W	
R911	061G1206203	RST CHIPR 20 KOHM +-5% 1/4W	
R907	061G1206229	RST CHIPR 2.2 OHM +-5% 1/4W	
R908	061G1206229	RST CHIPR 2.2 OHM +-5% 1/4W	
R931	061G1206229	RST CHIPR 2.2 OHM +-5% 1/4W	
R910	061G1206304	RST CHIPR 300K OHM +-5% 1/4W	
R901	061G1206334	RST CHIPR 330KOHM +-5% 1/4W	
R902	061G1206334	RST CHIPR 330KOHM +-5% 1/4W	
R903	061G1206334	RST CHIPR 330KOHM +-5% 1/4W	
R950	061G1206470	RST CHIPR 47 OHM +-5% 1/4W	
R952	061G1206470	RST CHIPR 47 OHM +-5% 1/4W	
R962	061G1206475	RST CHIPR 4.7 MOHM +-5% 1/4W	
R942	061G1206513	RST CHIPR 51 KOHM +-5% 1/4W	
R920	061G1206680 3F	RST CHIPR 680KOHM +-1% 1/4W	
R921	061G1206680 3F	RST CHIPR 680KOHM +-1% 1/4W	
R922	061G1206680 3F	RST CHIPR 680KOHM +-1% 1/4W	
R984	061G1206682	RST CHIPR 6.8 KOHM +-5% 1/4W	
R969	061G1206682	RST CHIPR 6.8 KOHM +-5% 1/4W	
R968	061G1206682	RST CHIPR 6.8 KOHM +-5% 1/4W	
R966	061G1206682	RST CHIPR 6.8 KOHM +-5% 1/4W	
C912	065G0805101 32	100PF +-10% 50V X7R	
C808	065G080510232K Y	CAP CHIP 0805 1N 50V X7R +/-10%	
C909	065G0805103 32	CAP CHIP 0805 10NF K 50V X7R	
C939	065G0805103 32	CAP CHIP 0805 10NF K 50V X7R	
C816	065G080510331J M	CAP CHIP 0805 10NF J 50V NPO	
C978	065G0805104 32	CAP CHIP 0805 0.1UF K 50V X7R	
C956	065G0805104 32	CAP CHIP 0805 0.1UF K 50V X7R	
C949	065G0805104 32	CAP CHIP 0805 0.1UF K 50V X7R	
C948	065G0805104 32	CAP CHIP 0805 0.1UF K 50V X7R	
C947	065G0805104 32	CAP CHIP 0805 0.1UF K 50V X7R	

英华家电维修资料软件专用 购买QQ:505966338

C942	065G0805104 32	CAP CHIP 0805 0.1UF K 50V X7R	
C934	065G0805104 32	CAP CHIP 0805 0.1UF K 50V X7R	
C923	065G0805104 32	CAP CHIP 0805 0.1UF K 50V X7R	
C921	065G0805104 32	CAP CHIP 0805 0.1UF K 50V X7R	
C913	065G0805104 32	CAP CHIP 0805 0.1UF K 50V X7R	
C908	065G0805104 32	CAP CHIP 0805 0.1UF K 50V X7R	
C907	065G0805104 32	CAP CHIP 0805 0.1UF K 50V X7R	
C806	065G0805104 32 GP	CHIP 0.1UF 50V X7R	
C809	065G080510522K 3	CAP CHIP 0805 1U 25V X7R +/-10%	
C811	065G080510522K 3	CAP CHIP 0805 1U 25V X7R +/-10%	
C922	065G080510537Z 3	CAP CHIP 0805 1U 50V Y5V -20%+80%	
C815	065G0805152 22	CHIP 1500PF 25V X7R 0805	
C944	065G0805221 32	CHIP 220PF 50V X7R 0805	
C812	065G0805223 22	CHIP 0.022UF 25V X7R 080	
C955	065G0805224 32	0.22UF,K,50V,X7R	
C814	065G080522522K M	MLCC 0805 CAP 2.2UF 25V X7R	
C802	065G080522522K M	MLCC 0805 CAP 2.2UF 25V X7R	
C807	065G080533131G	MLCC 0805 330PF J 50V NPO	
C976	065G0805334 32 GP	CHIP 0805 0.33UF K 50V X7R	
C810	065G080547232K Y	CAP CHIP 0805 4700PF K 50V X7R	
C813	065G080547232K Y	CAP CHIP 0805 4700PF K 50V X7R	
C917	065G0805473 32	CHIP 0.047UF 50V X7R	
C943	065G0805473 32	CHIP 0.047UF 50V X7R	
C817	065G0805473 32	CHIP 0.047UF 50V X7R	
C818	065G0805473 32	CHIP 0.047UF 50V X7R	
C918	065G0805474 22	CHIP 0.47UF 25V X7R 0805	
C820	065G0805681 31	CHIP 680PF 50V NPO 0805	
C821	065G0805681 31	CHIP 680PF 50V NPO 0805	
C950	065G120610272K Y	CAP CHIP 1206 1NF K 500V X7R	
C951	065G120610272K Y	CAP CHIP 1206 1NF K 500V X7R	
C952	065G120610272K Y	CAP CHIP 1206 1NF K 500V X7R	
C957	065G120610272K Y	CAP CHIP 1206 1NF K 500V X7R	
C970	065G120610272K Y	CAP CHIP 1206 1NF K 500V X7R	
C972	065G120610272K Y	CAP CHIP 1206 1NF K 500V X7R	
D805	093G 64 42 PP	BAV70 SOT-23	
D801	093T 60S 5 T	SCS0520P SOD-123	
D802	093T 60S 5 T	SCS0520P SOD-123	
D803	093T 60S 5 T	SCS0520P SOD-123	
D804	093T 60S 5 T	SCS0520P SOD-123	
CN901	006G 31501	EYELET	
T802	006G 31502	1.5MM RIVET	
IC952	056G 158 10 T	IC AS431AZTR-E1 TO-92	
R974	061G 20010252T	RST MFR 1K OHM +-1% 1/4W	
R801	061G 30310852T GP	FUSE RESISTOR	
R948	061G 30310852T GP	FUSE RESISTOR	
R960	061G 60210252T	CFR 1K OHM +-5% 1/6W	
R961	061G 60210352T	CFR 10KOHM +-5% 1/6W	

英华家电维修资料软件专用 购买QQ:505966338

R916	061G152M12852T	RST MOFR 0.12 OHM +-5% 2WS	
R946	061G152M36852T	RST MOF 0R36 5% 2W	
R954	061T 20010152T	100 OHM 1% 1/4W	
C803	065G 1K102 5T6213	CER CAP 1000PF K 1KV TDK	
C932	065G 2K102 2T6921	CAP CER 1000PF 2KV K Y5P	
C935	065G 2K102 2T6921	CAP CER 1000PF 2KV K Y5P	
C933	067G 2151007NT	KY50VB10M-TP5 5*11.5	
C937	067G 2151007NT	KY50VB10M-TP5 5*11.5	
C941	067G 2151007NT	KY50VB10M-TP5 5*11.5	
C914	067G 2154707NT	KY50VB47M-TP5 6.3*11	
C933	067G215Y1007KT	KY50VB10M-TP5 5*11.5	
C937	067G215Y1007KT	KY50VB10M-TP5 5*11.5	
C941	067G215Y1007KT	KY50VB10M-TP5 5*11.5	
C931	067G215Y101 7N	100UF 50V NCC 6.3*11MM	
C931	067G215Y1017NT	EC 100UF 50V 8*11.5MM	
C914	067G215Y4707KT	47UF 50V	
ZD952	093G 3916652T	MTZJ15B (13.89-14.62)	
ZD930	093G 3916752T	MTZJ T-72 16B	
ZD970	093G 3917152T	TZJ T-72 30B	
D901	093G 52 1552T	DIODE 1N4007-E3/73 1A/1000V DO-41	
D931	093G 5250S52T	DIODE AU02Z-V1 SANKEN	
D806	093G 64 1152T	1N4148	
D807	093G 64 1152T	1N4148	
D903	093G 64 1152T	1N4148	
D905	093G 64 1152T	1N4148	
D906	093G 64 1152T	1N4148	
D951	093G 64 1152T	1N4148	
D971	093G 64 1152T	1N4148	
ZD970	093G 39G 9	DIODE MTZJ30B DO-34	
D940	093T1080 252T	DIODE SARSO1-V1 SANKEN	
D930	093T1080 252T	DIODE SARSO1-V1 SANKEN	
J907	095G 90 23	JUMPER WIRE	
J906	095G 90 23	JUMPER WIRE	
J905	095G 90 23	JUMPER WIRE	
J904	095G 90 23	JUMPER WIRE	
J903	095G 90 23	JUMPER WIRE	
J902	095G 90 23	JUMPER WIRE	
J901	095G 90 23	JUMPER WIRE	
J809	095G 90 23	JUMPER WIRE	
J808	095G 90 23	JUMPER WIRE	
J807	095G 90 23	JUMPER WIRE	
J806	095G 90 23	JUMPER WIRE	
J805	095G 90 23	JUMPER WIRE	
J804	095G 90 23	JUMPER WIRE	
J803	095G 90 23	JUMPER WIRE	
J802	095G 90 23	JUMPER WIRE	
J801	095G 90 23	JUMPER WIRE	

英华家电维修资料软件专用 购买QQ:505966338

D932	095G 90 23	JUMPER WIRE	
J914	095G 90 23	JUMPER WIRE	
J927	095G 90 23	JUMPER WIRE	
J926	095G 90 23	JUMPER WIRE	
J925	095G 90 23	JUMPER WIRE	
J923	095G 90 23	JUMPER WIRE	
J922	095G 90 23	JUMPER WIRE	
J921	095G 90 23	JUMPER WIRE	
J920	095G 90 23	JUMPER WIRE	
J919	095G 90 23	JUMPER WIRE	
J918	095G 90 23	JUMPER WIRE	
J917	095G 90 23	JUMPER WIRE	
J916	095G 90 23	JUMPER WIRE	
J913	095G 90 23	JUMPER WIRE	
J912	095G 90 23	JUMPER WIRE	
J911	095G 90 23	JUMPER WIRE	
J910	095G 90 23	JUMPER WIRE	
J908	095G 90 23	JUMPER WIRE	
E715	715G3332P01H20003M	CEM-1,94V-0,190*250MM,T1.6MM,S/S	
D807	093G 64 1152T PH	SWITCH DIODE 1N4148 BY PHILIPS	
D806	093G 64 1152T PH	SWITCH DIODE 1N4148 BY PHILIPS	
D903	093G 64 1152T PH	SWITCH DIODE 1N4148 BY PHILIPS	
D905	093G 64 1152T PH	SWITCH DIODE 1N4148 BY PHILIPS	
D906	093G 64 1152T PH	SWITCH DIODE 1N4148 BY PHILIPS	
D951	093G 64 1152T PH	SWITCH DIODE 1N4148 BY PHILIPS	
D971	093G 64 1152T PH	SWITCH DIODE 1N4148 BY PHILIPS	
IC971	056G 158 10 T	IC AS431AZTR-E1 TO-92	
FB902	071G 55 23	BEAD	
C822	065G 1K102 5T6213	CER CAP 1000PF K 1KV TDK	
Q925	057G 420 3 T	TRA KTA1273-Y- AT/ P_TO-92L KEC	
J810	095G 90 23	JUMPER WIRE	
FB903	071G 55 23	BEAD	
FB901	071G 55 26 S	FERRITE CORE	
E715	715G3332P01H20003S	CEM-1,94V-0,190*250MM,T1.6MM,S/S	2nd source
	709T3332 QA001	COMSUPTIVE ASS'Y	
R823	061G0805240 0F	RST CHIPR 240 OHM +-1% 1/8W	
C816	065G080510331J 3	CAP CHIP 0805 0.01UF 50V NPO	
R815	061G0805513	RST CHIPR 51K OHM +-5% 1/8W	
C814	065G080522522K 3	CAP CHIP 0805 2U2 25V X7R +/-10%	
C802	065G080522522K 3	CAP CHIP 0805 2U2 25V X7R +/-10%	
C915	065G0805471 32	470PF/50V/0805/X7R	
C919	065G080522131G	CAP CHIP 0805 220PF G 50V NPO	
C816	065G080510331J F	CHIP 0805 10NF J 50V NPO FENGHUA	
C811	065G080510522K T	CAP CHIP 0805 1UF K 25V X7R	
C922	065G080510537Z T	CAP CHIP 0805 1UF Z 50V Y5V	
C809	065G080510522K T	CAP CHIP 0805 1UF K 25V X7R	
R985	061G0805362 JW	RST CHIPR 3K6 +-5% 1/8W WALSIN	

英华家电维修资料软件专用 购买QQ:505966338

	709T3332 QS001	COMSUPTIVE ASS'Y	
	Q01G6080 1	SCREW	
	Q11G5052 1	STRING	
	Q11T5043 5	PCB SUPPORT	
	Q36T 600 30 18	NONWOVEN FABRIC	
	Q36T 600 30 18	NONWOVEN FABRIC	
	Q40G000260018A	SIDE LABEL	
	Q41G783061516A	WARRANTY CARD	
	Q44GJ037101	EPS CUSHION	
	Q44GJ037201	EPS CUSHION	
	Q44GJ037301	EPS CUSHION	
	Q44GJ037401	EPS CUSHION	
	Q44GJ03761510B	32" AOC TV CARTON	
	Q45G2010M0101A	PE BAG FOR MANUAL	
	Q45G2010M0102A	PE BAG FOR MANUAL	
	Q45T 99609 61	EPE COVER FOR MONITOR	
	Q50G 4 10	TIE (Y1900221)	
	Q52G 1185 99	BIG CARTON TAPE FOR AOC	
	Q52G6025 15263	MYLAR	
	Q52T 1150522	TAPE_INSULATING	
	Z85T0010101	SHIELDING	
	Z85T0013101	SHIELD_MAIN(CN)	
	041T780062415A	CERTIFICATE CARD	
	092TB1JX1A3NGC	BATTERY LR03 AAA CH760A2S/G	
	0M1G 940 16 47 CR3	SCREW	
	0Q1G 940 16120	SCREW	
	Q41G42MV615 4A	MANUAL	
	Q45G 76 28NV2 R	PE BAG FOR CLAMP	
	026G 800700 1A	BARCODE LABEL	
	040G 58162435A	P/N LABEL FOR MANUAL PE BAG	
	Q40G 32061566A	RATING LABEL	

英华家电维修资料软件专用 购买QQ:505966338

7.2 L42DS99X E429M1ND4WA5NN

点位	组件	对象描述	备注
	001G6021 1	SCREW	
	002G6008 1	SCREW 42A9940007	
	052G 1186	SMALL TAPE	
	052G 1211 B	CONDUCTIVE TAPE 85MM *40MM *0.09MM	
	052G 2191 A	PAPER TAPE	
	078G0120 2 M	SPEAKER 6 OHM 12W 160X42MM	
	089G179E51HA00	FFC CABLE 51P 420MM P 0.5 117001-51270	
	089G214A18N IS	POWER CORD 1.8M FA37B201312180TP	
	095G801312CA01	WIRE HARNESS 12P-12P 200MM CJT20A0344	
	095G8014 4CA19	HARNESS4P-2*(2*PAST)1000+500MMCJT20A0343	
E09502	095G8014 6FA08	WIRE HARNESS 6P-6P 160MM 89878	
E09502	095G8014 6XA08	WIRE HARNESS 6P-6P 60MM LCDXXTA0973	2nd source
E09503	095G8014 7FA17	WIRE HARNESS 7P-7P 320MM 89920	
E09503	095G8014 7XA17	WIRE HARNESS 7P-7P 320MM LCDXXTA0974	2nd source
	095G8019 3CA01	HARNESS 3P-3P 180MM PH:3.96MM CJT20A0340	
	098GRABD2NCACJ	RC-GJ2100B-F	
	0D1G1730 8120	SCREW	
	0D1G1730 8120	SCREW	
	0M1G 930 6120	SCREW	
	0M1G 930 6120	SCREW	
	0M1G 930 6120	SCREW	
	0M1G 940 5120	SCREW	
	0M1G1430 8 47 CR3	SCREW	
	0M1G1430 8 47 CR3	SCREW	
	0M1G1740 8120	SCREW FOR STD/MF 42-D020715/42-D000649()	
	0M1G1740 8120	SCREW FOR STD/MF 42-D020715/42-D000649()	
	0M1G1830 8120	SCREW	
	0Q1G 930 10 47 CR3	SCREW	
	0Q1G 930 10 47 CR3	SCREW	
	0Q1G 930 10 47 CR3	SCREW	
	0Q1G 940 25 47 CR3	SCREW	
	0Q1G 940 25 47 CR3	SCREW	
	705TQ934N71	BEZEL ASS'Y 42"	
	0Q1G 930 10 47 CR3	SCREW	
	IRPF9QB5	IR BOARD	
U0202	056G 627A00	LIGHT SENSOR KDR3T03AL 560NM	
U0201	056T 627 33 1	IR 37.9KHZ KSM-603TM2E	
C0206	067G305M101 2C	EC 100UF 10V SK 5X7MM	
LED0201	081G 12 6C GP	LED RED/GREEN	
U0201	P11G0021101	IR-HOLDER	
U0202	P11G0022101	IR-HOLDER	
LED0201	P11G0027101	HOLDER	
CN0101	033G8032 6F HR	CONNECTOR	
Q0201	057G 419513	BC847C	
Q0202	057G 419513	BC847C	

英华家电维修资料软件专用 购买QQ:505966338

Q0201	057G 477900 T	TRA SIG SM BC847C (KEC0) R	
Q0202	057G 477900 T	TRA SIG SM BC847C (KEC0) R	
R0210	061G0603101 T	RST CHIP 100R 1/10W 5%	
R0210	061G0603101 Y	RST CHIPR 100 OHM +-5% 1/10W YAGEO	
R0211	061G0603102 T	RST CHIP 1K 1/10W 5%	
R0211	061G0603102 Y	RST CHIPR 1KOHM +-5% 1/10W YAGEO	
R0203	061G0603103 T	RST CHIP 10K 1/10W 5%	
R0205	061G0603103 T	RST CHIP 10K 1/10W 5%	
R0208	061G0603103 T	RST CHIP 10K 1/10W 5%	
R0203	061G0603103 Y	RST CHIPR 10KOHM +-5% 1/10W YAGEO	
R0205	061G0603103 Y	RST CHIPR 10KOHM +-5% 1/10W YAGEO	
R0208	061G0603103 Y	RST CHIPR 10KOHM +-5% 1/10W YAGEO	
R0202	061G0603221 T	RST CHIP 220R 1/10W 5%	
R0202	061G0603221 Y	RST CHIPR 220 OHM +-5% 1/10W YAGEO	
R0216	061G0603271 JF	RST CHIPR 270OHM 1/10W FENGHUA	
R0216	061G0603271 JT	RST CHIP 270R 1/10W 5% TZAI YUAN	
R0204	061G0603332 T	RST CHIP 3K3 1/10W 5%	
R0207	061G0603332 T	RST CHIP 3K3 1/10W 5%	
R0204	061G0603332 Y	RST CHIPR 3.3KOHM +-5% 1/10W YAGEO	
R0207	061G0603332 Y	RST CHIPR 3.3KOHM +-5% 1/10W YAGEO	
R0209	061G0603561 JT	RST CHIPR 560OHM +-5% 1/10W TZAI YUAN	
C0202	065G060310131J Y	CAP CHIP 0603 100P 50V NPO +/-5%	
C0203	065G060310412K Y	CAP CHIP 0603 100N 16V X7R +/-10%	
C0204	065G060310412K Y	CAP CHIP 0603 100N 16V X7R +/-10%	
C0205	065G060310412K Y	CAP CHIP 0603 100N 16V X7R +/-10%	
C0201	065G0805106A5K 3	CHIP 10UF 10V X5R 10%	
C0201	065G0805106A5K T	CHIP 10UF 10V X5R 0805	
C0202	065T060310131J 3	CAP CHIP 0603 100P 50V NPO +/-5%	
C0203	065T060310412K 3	CAP CHIP 0603 100N 16V X7R +/-10%	
C0204	065T060310412K 3	CAP CHIP 0603 100N 16V X7R +/-10%	
C0205	065T060310412K 3	CAP CHIP 0603 100N 16V X7R +/-10%	
C0201	065T0805106A5K T	CAP CHIP 0805 10UF K 10V X5R	
FB0201	071G 59C601 MR	CHIP BEAD 600R/200MA BLM18AG601SN1D	
FB0204	071G 59C601 MR	CHIP BEAD 600R/200MA BLM18AG601SN1D	
FB0205	071G 59C601 MR	CHIP BEAD 600R/200MA BLM18AG601SN1D	
FB0203	071G 59C601 MR	CHIP BEAD 600R/200MA BLM18AG601SN1D	
FB0202	071G 59C601 MR	CHIP BEAD 600R/200MA BLM18AG601SN1D	
FB0205	071G 59C601 TA	CHIP BEAD 600R/200MA FCM1608K-601T02	
FB0201	071G 59C601 TA	CHIP BEAD 600R/200MA FCM1608K-601T02	
FB0202	071G 59C601 TA	CHIP BEAD 600R/200MA FCM1608K-601T02	
FB0203	071G 59C601 TA	CHIP BEAD 600R/200MA FCM1608K-601T02	
FB0204	071G 59C601 TA	CHIP BEAD 600R/200MA FCM1608K-601T02	
FB0201	071G 59S601 T	CHIP BEAD 600R/500MA MMZ1608S601CT	
FB0202	071G 59S601 T	CHIP BEAD 600R/500MA MMZ1608S601CT	
FB0203	071G 59S601 T	CHIP BEAD 600R/500MA MMZ1608S601CT	
FB0204	071G 59S601 T	CHIP BEAD 600R/500MA MMZ1608S601CT	
FB0205	071G 59S601 T	CHIP BEAD 600R/500MA MMZ1608S601CT	

英华家电维修资料软件专用 购买QQ:505966338

ZD0201	093G 39S 66	DIO REG SM BZX84-C5V1 (PHSE)R	
ZD0201	093G 39S900 T	DIO REG SM BZX84-C5V1-V(VISH)R	
	715G3401 2	TV IR-PCB FR-4 14.2¡Á64.3¡Á1.6MM DS	
	KEPF9QA2	KEY BOARD T3403-2-X-X-2-090403	
CN0101	033G3802 4 BH F	CONNECTOR	
R0106	061G0603222 T	RST CHIP 2K2 1/10W 5%	
R0105	061G0603222 T	RST CHIP 2K2 1/10W 5%	
R0106	061G0603222 Y	RST CHIPR 2.2KOHM +-5% 1/10W YAGEO	
R0105	061G0603222 Y	RST CHIPR 2.2KOHM +-5% 1/10W YAGEO	
R0104	061G0603471 T	RST CHIP 470R 1/10W 5%	
R0102	061G0603471 T	RST CHIP 470R 1/10W 5%	
R0102	061G0603471 Y	RST CHIPR 470 OHM +-5% 1/10W YAGEO	
R0104	061G0603471 Y	RST CHIPR 470 OHM +-5% 1/10W YAGEO	
R0101	061G0603562 T	RST CHIP 5K6 1/10W 5%	
R0103	061G0603562 T	RST CHIP 5K6 1/10W 5%	
R0101	061G0603562 Y	RST CHIPR 5.6KOHM +-5% 1/10W YAGEO	
R0103	061G0603562 Y	RST CHIPR 5.6KOHM +-5% 1/10W YAGEO	
C0103	065G060310422K T	CAP CHIP 0603 0.1UF K 25V X7R	
C0102	065G060310422K T	CAP CHIP 0603 0.1UF K 25V X7R	
C0101	065G060310422K T	CAP CHIP 0603 0.1UF K 25V X7R	
C0102	065G060310422K Y	CAP CHIP 0603 100N 25V X7R +/-10%	
C0101	065G060310422K Y	CAP CHIP 0603 100N 25V X7R +/-10%	
C0103	065G060310422K Y	CAP CHIP 0603 100N 25V X7R +/-10%	
SW0101	077G 603 AI HJ	TACT SWITCH 2PIN	
SW0102	077G 603 AI HJ	TACT SWITCH 2PIN	
SW0103	077G 603 AI HJ	TACT SWITCH 2PIN	
SW0104	077G 603 AI HJ	TACT SWITCH 2PIN	
SW0105	077G 603 AI HJ	TACT SWITCH 2PIN	
SW0106	077G 603 AI HJ	TACT SWITCH 2PIN	
SW0107	077G 603 AI HJ	TACT SWITCH 2PIN	
	715G3403 2	KEY PCB FR2 162×13.5×1.6MM SS	
	P33E0132 VT 1L0100	FUNCITON KEY	
	P33E0134AFT 1C0100	LENS	
	P34E0294 VT 1L0130	BEZEL TV42W-9C1	
	P34E0295ADTA1L0100	DECO	
	Q36T 600 30 8 GP	NONWOVEN FABRIC	
	Q52G 3 81	3M DOUBLE FACE TAPE	
	705TQ934N72	REAR COVER ASS'Y 42"	
	0Q1G 930 10 47 CR3	SCREW	
	P15T0320101	BRACKET_VESA	
	P34E0296ADT 1L0130	REAR COVER TV42W	
	P34E0300ADT 1L0100	COVER REAR IO CN	
	Q16G0001 30 7	SPONGE	
	Q44T3231 21 7	EVA WASHER	
	750TVM420HN323N000	PANEL V420H1-LN3 C2/C3 NH CMO	
	756TQ9CB 1D010 00	MAIN BOARD-CBPF93JDQ1	
U1401	056G1133 34	M24C02-WMN6TP	

英华家电维修资料软件专用 购买QQ:505966338

U1401	056G1133918	IC AT24C02BN-SH-T 8-SOIC	
U4403	056G1133935	IC MX25L3205DMI-12G SOP-16	
SMTF-U4403	100TAMMM005D21	MCU ASS'Y-056G1133935	
SMTF-U1401	100TAMMMV01D1E	MCU ASS'Y-056G1133 34	
	756TQ9PT 1D001 00	PTPF BOARD-PTPF9QA2	
U603	056G1133939	IC MX25L3205DM2I-12G SOP-8	
SPTP-U603	100TAMMK005D21	MCU ASS'Y-056G1133939	
	A15T0320101	FIX BRACKET FOR CMO L07	
	040G 45762412B	CBPC LABEL	
CN6101	033G3802 4B Y	CONNECTOR	
CN7301	033G3802 4B Y	CONNECTOR	
CN9902	033G3802 6B Y	CONN 6PIN 2.0	
CN7306	033G3802 7B Y	CONNECTOR 7P 2.0 DIP	
CN9901	033G3802 7B Y	CONNECTOR 7P 2.0 DIP	
CN7201	033G380212B Y	WAFER	
CN7409	033G8027 8M X	WAFER 2.0MM DIP 2*4P	
C6127	067T 2154714CT	EC 470UF 25V GF 10X12MM	
C6130	067T 2154714CT	EC 470UF 25V GF 10X12MM	
C7207	067T 2154714CT	EC 470UF 25V GF 10X12MM	
C7210	067T 3054716CT	EC 470UF 35V KM 10X16MM	
C7136	067T 3054716CT	EC 470UF 35V KM 10X16MM	
C6122	067T 3054716CT	EC 470UF 35V KM 10X16MM	
C6121	067T 3054716CT	EC 470UF 35V KM 10X16MM	
C7210	067T 3054716ET	EC 470UF 35V RGA 10X16MM	
C7136	067T 3054716ET	EC 470UF 35V RGA 10X16MM	
C6122	067T 3054716ET	EC 470UF 35V RGA 10X16MM	
C6121	067T 3054716ET	EC 470UF 35V RGA 10X16MM	
C6121	067T 3054716KT	EC 470UF 35V PF 10X16MM	
C6122	067T 3054716KT	EC 470UF 35V PF 10X16MM	
C7136	067T 3054716KT	EC 470UF 35V PF 10X16MM	
C7210	067T 3054716KT	EC 470UF 35V PF 10X16MM	
L6101	073G 253900 L	CHOKE COIL 35UH+/-10% 82MOHM DR10*8	
L6102	073G 253900 L	CHOKE COIL 35UH+/-10% 82MOHM DR10*8	
L6101	073G 253900 LS	CHOKE COIL 35UH+/-10% 82MOHM DR10*8	
L6102	073G 253900 LS	CHOKE COIL 35UH+/-10% 82MOHM DR10*8	
L1101	073G 253920 H	CHOKE COIL 150UH+/-10% 50MOHM DR10*8	
L7102	073T 253916 H	CHOKE COIL 15UH+/-10% 38MOHM DR10*8	
L7103	073T 253916 H	CHOKE COIL 15UH+/-10% 38MOHM DR10*8	
L7103	073T 253916 LS	CHOKE COIL 15UH+/-10% 38MOHM DR10*8	
L7102	073T 253916 LS	CHOKE COIL 15UH+/-10% 38MOHM DR10*8	
L6101	073T 253B00 H	CHOKE COIL 35.0UH+/-10% 82MOHM	
L6102	073T 253B00 H	CHOKE COIL 35.0UH+/-10% 82MOHM	
CN1205	088G 78 13938 YG	RCA JACK 1*3 Y/W/R V/A RCA-346D-03	
CN1207	088G 78 13938 YG	RCA JACK 1*3 Y/W/R V/A RCA-346D-03	
CN1201	088G 78 13942 YG	RCA JACK 1*5 G/B/R/W/R RCA-512DF	
CN1202	088G 78 13942 YG	RCA JACK 1*5 G/B/R/W/R RCA-512DF	
CN1703	088G 302A17 YG	PHONE JACK 3.5MM 3P V/T GREEN	

英华家电维修资料软件专用 购买QQ:505966338

CN1401	088G 35315F FX	D-SUB 15PIN FEMALE VERTICAL 附螺絲	
CN1705	088T 78 8904 TN	RCA JACK 1P WHITE 5105-810-001-A9	
CN1705	088T 78 8A04 YG	RCA JACK 1P BLACK RCA-176D-01	
CN1205	088T 78 13938 JC	RCA JACK 1*3 Y/W/R V/A MKC21-093AN	
CN1207	088T 78 13938 JC	RCA JACK 1*3 Y/W/R V/A MKC21-093AN	
CN1207	088T 78 13938 TN	RCA JACK 1*3 Y/W/R V/A 5105-870-083-98	
CN1205	088T 78 13938 TN	RCA JACK 1*3 Y/W/R V/A 5105-870-083-98	
CN1203	088T 78 13939 JC	RCA JACK 1*3 Y/W/R + S JACK	
CN1203	088T 78 13A39 YG	S JACK + RCA JACK 1*3 Y/W/R RCA-333S-010	
CN1204	088T 302912 S	PHONE JACK 3.5MM 7P BLACK 2SJ1508-001111	
CN1204	088T 302A12 YG	PHONE JACK 3.5MM 7P BLACK	
CN1401	088T 35315F VC	D-SUB 15PIN VERTICAL CONNECTOR	
CN1401	088T 35315FTNA	D-SUB CONN V 15P F (WITH SCREW UNLOCKED)	
TU1102	094GNPSEALL 2X	TUNER NTSC+PAL+SECAM STM-6C3/235	
C6103	067G 3051007CT	EC 10UF/50V KM 5*11MM	
C1105	067G 3051012CT	EC 100UF 10V KM 5X11MM	
C7134	067G 3051012CT	EC 100UF 10V KM 5X11MM	
C7143	067G 3051012CT	EC 100UF 10V KM 5X11MM	
C7162	067G 3051012CT	EC 100UF 10V KM 5X11MM	
C7213	067G 3052214CT	EC 220UF/25V KM 8*11MM	
C7214	067G 3052214CT	EC 220UF/25V KM 8*11MM	
C7213	067G 3052214ET	EC 220UF 25V RGA 8X11MM	
C7214	067G 3052214ET	EC 220UF 25V RGA 8X11MM	
C7129	067G 3152214CT	EC 220UF 25V GF 8*11.5MM	
C1106	067G215D4713KT	/105℃ EC 470UF M 16V KINGNICHI	
C1229	067G215D4713KT	/105℃ EC 470UF M 16V KINGNICHI	
C6116	067G215Y2212KT	LOW ESR EC 220UF 10V 6.3*11MM	
C6143	067G215Y2212KT	LOW ESR EC 220UF 10V 6.3*11MM	
C7126	067G215Y2212KT	LOW ESR EC 220UF 10V 6.3*11MM	
C7127	067G215Y2212KT	LOW ESR EC 220UF 10V 6.3*11MM	
C6103	067T 3051007ET	EC 10UF 50V RGA 5X11 MM	
C6103	067T 3051007KT	EC 10UF/50V PF 5*11MM	
C7143	067T 3051012ET	EC 100UF 10V RGA 5X11MM	
C7162	067T 3051012ET	EC 100UF 10V RGA 5X11MM	
C1105	067T 3051012ET	EC 100UF 10V RGA 5X11MM	
C7134	067T 3051012ET	EC 100UF 10V RGA 5X11MM	
C7162	067T 3051012KT	EC 100UF 10V PF 5X11MM	
C7143	067T 3051012KT	EC 100UF 10V PF 5X11MM	
C7134	067T 3051012KT	EC 100UF 10V PF 5X11MM	
C1105	067T 3051012KT	EC 100UF 10V PF 5X11MM	
C7213	067T 3052214KT	EC 220UF 25V PF 8X12MM	
C7214	067T 3052214KT	EC 220UF 25V PF 8X12MM	
C7129	067T 3152214KT	EC 220UF 25V ED 8*12MM	
C6129	067T 5154707CT	EC 47UF 50V GF 6.3*11MM	
C7107	067T215L1014CT	EC 100UF 25V KH 6.3*11MM	
C7127	067T215Y2212CT	EC 220UF 10V GL 6.3X11MM	
C7126	067T215Y2212CT	EC 220UF 10V GL 6.3X11MM	

英华家电维修资料软件专用 购买QQ:505966338

C6143	067T215Y2212CT	EC 220UF 10V GL 6.3X11MM	
C6116	067T215Y2212CT	EC 220UF 10V GL 6.3X11MM	
CN7502	033G8019 55 H2 HC	FPC/FFC CONN. 0.5MM 55P 196107-55041	
U7105	056G 133 30AAC	AZ1117H-ADJ-E1	
U7108	056G 133 30AAC	AZ1117H-ADJ-E1	
U7109	056G 133 30AAC	AZ1117H-ADJ-E1	
U7105	056G 563922	AME1117ACGTZ	
U7108	056G 563922	AME1117ACGTZ	
U7109	056G 563922	AME1117ACGTZ	
U7109	056G 585 10	IC AP1117ELA-ADJ	
U7108	056G 585 10	IC AP1117ELA-ADJ	
U7105	056G 585 10	IC AP1117ELA-ADJ	
U6102	056G 616917	IC TPA3124D2PWPR	
U1601	056G 634 2 1	IC PI5V330SQEX QSOP-16 PERICOM	
ZD1503	056G 662902	IC RCLAMP0502B.TCT SC-75 3L	
U1501	056G1133 34	M24C02-WMN6TP	
U1502	056G1133 34	M24C02-WMN6TP	
U1602	056G1133 34	M24C02-WMN6TP	
U1401	056G1133 34	M24C02-WMN6TP	
U4203	056G113353A	IC M24C32-WMN6T SO-8 ST	MSTARTV-H DCP
U1401	056G1133918	IC AT24C02BN-SH-T 8-SOIC	
U1501	056G1133918	IC AT24C02BN-SH-T 8-SOIC	
U1502	056G1133918	IC AT24C02BN-SH-T 8-SOIC	
U1602	056G1133918	IC AT24C02BN-SH-T 8-SOIC	
U4403	056G1133935	IC MX25L3205DMI-12G SOP-16	
U1201	056T 192901	IC DRV601RTJR QFN-20	
U6101	056T 192901	IC DRV601RTJR QFN-20	
U6103	056T 192901	IC DRV601RTJR QFN-20	
U7106	056T 379907	IC SC4525ASETRT SO-8	
U7103	056T 563952	IC SC4524BSETRT SO-8	
U4401	056T 615 51 2	IC HY5DU281622FTP-4-C TSOPII-66	
U1703	056T 623904	IC TS5A3157DCKR SC70	
U1704	056T 623904	IC TS5A3157DCKR SC70	
U1702	056T 623904	IC TS5A3157DCKR SC70	
U1701	056T 623904	IC TS5A3157DCKR SC70	
U1503	056T 634 23	IC TMDS361PAGT TQFP-64	
U4202	056T 643903	IC AP1702EWL-7 SOT23	
U4201	056T1126 63	IC MST9B885GL-1-LF LQFP-256	
U4203	056T1133933	IC AT24C32CN-SH-T SO8	MSTARTV-H DCP
Q1202	057G 417 6	PMBS3906/PHILIPS-SMT(06)	
Q1202	057G 417 13 T	KEC 2N3906S-RTK/PS	
Q1607	057G 417511	MMBT3904	
Q1606	057G 417511	MMBT3904	
Q1605	057G 417511	MMBT3904	
Q1604	057G 417511	MMBT3904	

英华家电维修资料软件专用 购买QQ:505966338

Q1603	057G 417511	MMBT3904	
Q1602	057G 417511	MMBT3904	
Q1202	057G 417512	MMBT3906	
Q1201	057G 419513	BC847C	
Q1203	057G 419513	BC847C	
Q1503	057G 419513	BC847C	
Q1508	057G 419513	BC847C	
Q1509	057G 419513	BC847C	
Q1510	057G 419513	BC847C	
Q1511	057G 419513	BC847C	
Q7202	057G 419513	BC847C	
Q7201	057G 419513	BC847C	
Q7108	057G 419513	BC847C	
Q7103	057G 419513	BC847C	
Q6107	057G 419513	BC847C	
Q6106	057G 419513	BC847C	
Q6105	057G 419513	BC847C	
Q6104	057G 419513	BC847C	
Q6102	057G 419513	BC847C	
Q1701	057G 419513	BC847C	
Q6104	057G 477900 T	TRA SIG SM BC847C (KEC0) R	
Q6105	057G 477900 T	TRA SIG SM BC847C (KEC0) R	
Q6106	057G 477900 T	TRA SIG SM BC847C (KEC0) R	
Q6107	057G 477900 T	TRA SIG SM BC847C (KEC0) R	
Q7103	057G 477900 T	TRA SIG SM BC847C (KEC0) R	
Q7108	057G 477900 T	TRA SIG SM BC847C (KEC0) R	
Q7201	057G 477900 T	TRA SIG SM BC847C (KEC0) R	
Q7202	057G 477900 T	TRA SIG SM BC847C (KEC0) R	
Q6102	057G 477900 T	TRA SIG SM BC847C (KEC0) R	
Q1701	057G 477900 T	TRA SIG SM BC847C (KEC0) R	
Q1511	057G 477900 T	TRA SIG SM BC847C (KEC0) R	
Q1510	057G 477900 T	TRA SIG SM BC847C (KEC0) R	
Q1509	057G 477900 T	TRA SIG SM BC847C (KEC0) R	
Q1508	057G 477900 T	TRA SIG SM BC847C (KEC0) R	
Q1503	057G 477900 T	TRA SIG SM BC847C (KEC0) R	
Q1203	057G 477900 T	TRA SIG SM BC847C (KEC0) R	
Q1201	057G 477900 T	TRA SIG SM BC847C (KEC0) R	
Q7303	057G 759 2	RK7002FD5T116 SOT-23 BY ROHM	
Q1502	057G 759 2	RK7002FD5T116 SOT-23 BY ROHM	
Q6101	057G 7601PH	TRA SIG SM MUN2211J(ONSE)R	
Q7102	057G 7601PH	TRA SIG SM MUN2211J(ONSE)R	
Q7104	057G 7601PH	TRA SIG SM MUN2211J(ONSE)R	
Q6101	057G 7602PH	TRA PDTC114EK SC-59 PHILIPS	
Q7102	057G 7602PH	TRA PDTC114EK SC-59 PHILIPS	
Q7104	057G 7602PH	TRA PDTC114EK SC-59 PHILIPS	
Q7303	057G 763 53	FET 2N7002ESPT 0.3A/60V SOT-23	
Q1502	057G 763 53	FET 2N7002ESPT 0.3A/60V SOT-23	

英华家电维修资料软件专用 购买QQ:505966338

Q6103	057G 763901	FET SI4835BDY SO-8	
Q7101	057G 763901	FET SI4835BDY SO-8	
Q7109	057G 763901	FET SI4835BDY SO-8	
Q6103	057G 763912	MOSFET SI4835DDY SO-8	
Q7101	057G 763912	MOSFET SI4835DDY SO-8	
Q7109	057G 763912	MOSFET SI4835DDY SO-8	
RP4407	061G 126470 8Y	RST CHIP AR 8P4R 47 OHM +-5% 1/16W	
RP4406	061G 126470 8Y	RST CHIP AR 8P4R 47 OHM +-5% 1/16W	
RP4405	061G 126470 8Y	RST CHIP AR 8P4R 47 OHM +-5% 1/16W	
RP4404	061G 126470 8Y	RST CHIP AR 8P4R 47 OHM +-5% 1/16W	
RP4403	061G 126470 8Y	RST CHIP AR 8P4R 47 OHM +-5% 1/16W	
RP4402	061G 126470 8Y	RST CHIP AR 8P4R 47 OHM +-5% 1/16W	
RP4401	061G 126470 8Y	RST CHIP AR 8P4R 47 OHM +-5% 1/16W	
R1107	061G0402000 T	RST CHIP MAX 0R05 1/16W	
R1108	061G0402000 T	RST CHIP MAX 0R05 1/16W	
R1113	061G0402000 T	RST CHIP MAX 0R05 1/16W	
R7523	061G0402000 T	RST CHIP MAX 0R05 1/16W	
R7511	061G0402000 T	RST CHIP MAX 0R05 1/16W	
R7510	061G0402000 T	RST CHIP MAX 0R05 1/16W	
R7509	061G0402000 T	RST CHIP MAX 0R05 1/16W	
R7310	061G0402000 T	RST CHIP MAX 0R05 1/16W	
R7303	061G0402000 T	RST CHIP MAX 0R05 1/16W	
R7215	061G0402000 T	RST CHIP MAX 0R05 1/16W	
R4261	061G0402000 T	RST CHIP MAX 0R05 1/16W	
R4216	061G0402000 T	RST CHIP MAX 0R05 1/16W	
R4210	061G0402000 T	RST CHIP MAX 0R05 1/16W	
R1116	061G0402000 T	RST CHIP MAX 0R05 1/16W	
R1123	061G0402000 T	RST CHIP MAX 0R05 1/16W	
R1219	061G0402000 T	RST CHIP MAX 0R05 1/16W	
R1246	061G0402000 T	RST CHIP MAX 0R05 1/16W	
R1415	061G0402000 T	RST CHIP MAX 0R05 1/16W	
R1416	061G0402000 T	RST CHIP MAX 0R05 1/16W	
R1548	061G0402000 T	RST CHIP MAX 0R05 1/16W	
R1549	061G0402000 T	RST CHIP MAX 0R05 1/16W	
R1550	061G0402000 T	RST CHIP MAX 0R05 1/16W	
R4209	061G0402000 T	RST CHIP MAX 0R05 1/16W	
R4209	061G0402000 Y	RST CHIP MAX 0R05 1/16W YAGEO	
R4210	061G0402000 Y	RST CHIP MAX 0R05 1/16W YAGEO	
R4216	061G0402000 Y	RST CHIP MAX 0R05 1/16W YAGEO	
R4261	061G0402000 Y	RST CHIP MAX 0R05 1/16W YAGEO	
R7215	061G0402000 Y	RST CHIP MAX 0R05 1/16W YAGEO	
R7303	061G0402000 Y	RST CHIP MAX 0R05 1/16W YAGEO	
R7310	061G0402000 Y	RST CHIP MAX 0R05 1/16W YAGEO	
R7509	061G0402000 Y	RST CHIP MAX 0R05 1/16W YAGEO	
R7510	061G0402000 Y	RST CHIP MAX 0R05 1/16W YAGEO	
R7511	061G0402000 Y	RST CHIP MAX 0R05 1/16W YAGEO	
R7523	061G0402000 Y	RST CHIP MAX 0R05 1/16W YAGEO	

英华家电维修资料软件专用 购买QQ:505966338

R1550	061G0402000 Y	RST CHIP MAX 0R05 1/16W YAGEO	
R1107	061G0402000 Y	RST CHIP MAX 0R05 1/16W YAGEO	
R1108	061G0402000 Y	RST CHIP MAX 0R05 1/16W YAGEO	
R1113	061G0402000 Y	RST CHIP MAX 0R05 1/16W YAGEO	
R1116	061G0402000 Y	RST CHIP MAX 0R05 1/16W YAGEO	
R1123	061G0402000 Y	RST CHIP MAX 0R05 1/16W YAGEO	
R1219	061G0402000 Y	RST CHIP MAX 0R05 1/16W YAGEO	
R1246	061G0402000 Y	RST CHIP MAX 0R05 1/16W YAGEO	
R1415	061G0402000 Y	RST CHIP MAX 0R05 1/16W YAGEO	
R1416	061G0402000 Y	RST CHIP MAX 0R05 1/16W YAGEO	
R1548	061G0402000 Y	RST CHIP MAX 0R05 1/16W YAGEO	
R1549	061G0402000 Y	RST CHIP MAX 0R05 1/16W YAGEO	
R6152	061G0402100 T	RST CHIP 10R 1/16W 5%	
R6151	061G0402100 T	RST CHIP 10R 1/16W 5%	
R6121	061G0402100 T	RST CHIP 10R 1/16W 5%	
R6120	061G0402100 T	RST CHIP 10R 1/16W 5%	
R6116	061G0402100 T	RST CHIP 10R 1/16W 5%	
R6115	061G0402100 T	RST CHIP 10R 1/16W 5%	
R1725	061G0402100 T	RST CHIP 10R 1/16W 5%	
R1404	061G0402100 T	RST CHIP 10R 1/16W 5%	
R1402	061G0402100 T	RST CHIP 10R 1/16W 5%	
R1235	061G0402100 T	RST CHIP 10R 1/16W 5%	
R1234	061G0402100 T	RST CHIP 10R 1/16W 5%	
R1115	061G0402100 T	RST CHIP 10R 1/16W 5%	
R1114	061G0402100 T	RST CHIP 10R 1/16W 5%	
R1114	061G0402100 Y	RST CHIPR 10 OHM +-5% 1/16W YAGEO	
R1115	061G0402100 Y	RST CHIPR 10 OHM +-5% 1/16W YAGEO	
R1234	061G0402100 Y	RST CHIPR 10 OHM +-5% 1/16W YAGEO	
R1235	061G0402100 Y	RST CHIPR 10 OHM +-5% 1/16W YAGEO	
R1402	061G0402100 Y	RST CHIPR 10 OHM +-5% 1/16W YAGEO	
R1404	061G0402100 Y	RST CHIPR 10 OHM +-5% 1/16W YAGEO	
R1725	061G0402100 Y	RST CHIPR 10 OHM +-5% 1/16W YAGEO	
R6115	061G0402100 Y	RST CHIPR 10 OHM +-5% 1/16W YAGEO	
R6116	061G0402100 Y	RST CHIPR 10 OHM +-5% 1/16W YAGEO	
R6120	061G0402100 Y	RST CHIPR 10 OHM +-5% 1/16W YAGEO	
R6121	061G0402100 Y	RST CHIPR 10 OHM +-5% 1/16W YAGEO	
R6151	061G0402100 Y	RST CHIPR 10 OHM +-5% 1/16W YAGEO	
R6152	061G0402100 Y	RST CHIPR 10 OHM +-5% 1/16W YAGEO	
R7405	061G0402101 Y	RST CHIPR 100 OHM +-5% 1/16W YAGEO	
R7404	061G0402101 Y	RST CHIPR 100 OHM +-5% 1/16W YAGEO	
R7402	061G0402101 Y	RST CHIPR 100 OHM +-5% 1/16W YAGEO	
R7401	061G0402101 Y	RST CHIPR 100 OHM +-5% 1/16W YAGEO	
R7322	061G0402101 Y	RST CHIPR 100 OHM +-5% 1/16W YAGEO	
R7321	061G0402101 Y	RST CHIPR 100 OHM +-5% 1/16W YAGEO	
R7320	061G0402101 Y	RST CHIPR 100 OHM +-5% 1/16W YAGEO	
R6132	061G0402101 Y	RST CHIPR 100 OHM +-5% 1/16W YAGEO	
R6131	061G0402101 Y	RST CHIPR 100 OHM +-5% 1/16W YAGEO	

英华家电维修资料软件专用 购买QQ:505966338

R6109	061G0402101 Y	RST CHIPR 100 OHM +-5% 1/16W YAGEO	
R6108	061G0402101 Y	RST CHIPR 100 OHM +-5% 1/16W YAGEO	
R4423	061G0402101 Y	RST CHIPR 100 OHM +-5% 1/16W YAGEO	
R4422	061G0402101 Y	RST CHIPR 100 OHM +-5% 1/16W YAGEO	
R4421	061G0402101 Y	RST CHIPR 100 OHM +-5% 1/16W YAGEO	
R4417	061G0402101 Y	RST CHIPR 100 OHM +-5% 1/16W YAGEO	
R4415	061G0402101 Y	RST CHIPR 100 OHM +-5% 1/16W YAGEO	
R4414	061G0402101 Y	RST CHIPR 100 OHM +-5% 1/16W YAGEO	
R4207	061G0402101 Y	RST CHIPR 100 OHM +-5% 1/16W YAGEO	
R1422	061G0402101 Y	RST CHIPR 100 OHM +-5% 1/16W YAGEO	
R1421	061G0402101 Y	RST CHIPR 100 OHM +-5% 1/16W YAGEO	
R1226	061G0402101 Y	RST CHIPR 100 OHM +-5% 1/16W YAGEO	
R1225	061G0402101 Y	RST CHIPR 100 OHM +-5% 1/16W YAGEO	
R1217	061G0402101 Y	RST CHIPR 100 OHM +-5% 1/16W YAGEO	
R7201	061G0402102 Y	RST CHIPR 1KOHM +-5% 1/16W YAGEO	
R4225	061G0402102 Y	RST CHIPR 1KOHM +-5% 1/16W YAGEO	
R4224	061G0402102 Y	RST CHIPR 1KOHM +-5% 1/16W YAGEO	
R4223	061G0402102 Y	RST CHIPR 1KOHM +-5% 1/16W YAGEO	
R1724	061G0402102 Y	RST CHIPR 1KOHM +-5% 1/16W YAGEO	
R1723	061G0402102 Y	RST CHIPR 1KOHM +-5% 1/16W YAGEO	
R1526	061G0402102 Y	RST CHIPR 1KOHM +-5% 1/16W YAGEO	
R1512	061G0402102 Y	RST CHIPR 1KOHM +-5% 1/16W YAGEO	
R1509	061G0402102 Y	RST CHIPR 1KOHM +-5% 1/16W YAGEO	
R1504	061G0402102 Y	RST CHIPR 1KOHM +-5% 1/16W YAGEO	
R1117	061G0402102 JY	RST CHIPR 1KOHM +-5% 1/16W YAGEO	
R1117	061G0402102 JY	RST CHIPR 1KOHM +-5% 1/16W YAGEO	
R1627	061G0402103 Y	RST CHIPR 10KOHM +-5% 1/16W YAGEO	
R1705	061G0402103 Y	RST CHIPR 10KOHM +-5% 1/16W YAGEO	
R1707	061G0402103 Y	RST CHIPR 10KOHM +-5% 1/16W YAGEO	
R1709	061G0402103 Y	RST CHIPR 10KOHM +-5% 1/16W YAGEO	
R1711	061G0402103 Y	RST CHIPR 10KOHM +-5% 1/16W YAGEO	
R1713	061G0402103 Y	RST CHIPR 10KOHM +-5% 1/16W YAGEO	
R1715	061G0402103 Y	RST CHIPR 10KOHM +-5% 1/16W YAGEO	
R1718	061G0402103 Y	RST CHIPR 10KOHM +-5% 1/16W YAGEO	
R1525	061G0402103 Y	RST CHIPR 10KOHM +-5% 1/16W YAGEO	
R1521	061G0402103 Y	RST CHIPR 10KOHM +-5% 1/16W YAGEO	
R1518	061G0402103 Y	RST CHIPR 10KOHM +-5% 1/16W YAGEO	
R1430	061G0402103 Y	RST CHIPR 10KOHM +-5% 1/16W YAGEO	
R1405	061G0402103 Y	RST CHIPR 10KOHM +-5% 1/16W YAGEO	
R1248	061G0402103 Y	RST CHIPR 10KOHM +-5% 1/16W YAGEO	
R1247	061G0402103 Y	RST CHIPR 10KOHM +-5% 1/16W YAGEO	
R1230	061G0402103 Y	RST CHIPR 10KOHM +-5% 1/16W YAGEO	
R1720	061G0402103 Y	RST CHIPR 10KOHM +-5% 1/16W YAGEO	
R4275	061G0402103 Y	RST CHIPR 10KOHM +-5% 1/16W YAGEO	
R4278	061G0402103 Y	RST CHIPR 10KOHM +-5% 1/16W YAGEO	
R4281	061G0402103 Y	RST CHIPR 10KOHM +-5% 1/16W YAGEO	
R4299	061G0402103 Y	RST CHIPR 10KOHM +-5% 1/16W YAGEO	

英华家电维修资料软件专用 购买QQ:505966338

R4302	061G0402103 Y	RST CHIPR 10KOHM +-5% 1/16W YAGEO	
R4307	061G0402103 Y	RST CHIPR 10KOHM +-5% 1/16W YAGEO	
R4310	061G0402103 Y	RST CHIPR 10KOHM +-5% 1/16W YAGEO	
R6110	061G0402103 Y	RST CHIPR 10KOHM +-5% 1/16W YAGEO	
R6135	061G0402103 Y	RST CHIPR 10KOHM +-5% 1/16W YAGEO	
R6136	061G0402103 Y	RST CHIPR 10KOHM +-5% 1/16W YAGEO	
R6142	061G0402103 Y	RST CHIPR 10KOHM +-5% 1/16W YAGEO	
R6143	061G0402103 Y	RST CHIPR 10KOHM +-5% 1/16W YAGEO	
R4272	061G0402103 Y	RST CHIPR 10KOHM +-5% 1/16W YAGEO	
R4221	061G0402103 Y	RST CHIPR 10KOHM +-5% 1/16W YAGEO	
R4222	061G0402103 Y	RST CHIPR 10KOHM +-5% 1/16W YAGEO	
R4232	061G0402103 Y	RST CHIPR 10KOHM +-5% 1/16W YAGEO	
R4234	061G0402103 Y	RST CHIPR 10KOHM +-5% 1/16W YAGEO	
R4235	061G0402103 Y	RST CHIPR 10KOHM +-5% 1/16W YAGEO	
R4237	061G0402103 Y	RST CHIPR 10KOHM +-5% 1/16W YAGEO	
R4252	061G0402103 Y	RST CHIPR 10KOHM +-5% 1/16W YAGEO	
R4256	061G0402103 Y	RST CHIPR 10KOHM +-5% 1/16W YAGEO	
R4260	061G0402103 Y	RST CHIPR 10KOHM +-5% 1/16W YAGEO	
R4269	061G0402103 Y	RST CHIPR 10KOHM +-5% 1/16W YAGEO	
R4270	061G0402103 Y	RST CHIPR 10KOHM +-5% 1/16W YAGEO	
R4271	061G0402103 Y	RST CHIPR 10KOHM +-5% 1/16W YAGEO	
R6146	061G0402103 Y	RST CHIPR 10KOHM +-5% 1/16W YAGEO	
R4128	061G0402103 Y	RST CHIPR 10KOHM +-5% 1/16W YAGEO	
R4127	061G0402103 Y	RST CHIPR 10KOHM +-5% 1/16W YAGEO	
R4122	061G0402103 Y	RST CHIPR 10KOHM +-5% 1/16W YAGEO	
R4121	061G0402103 Y	RST CHIPR 10KOHM +-5% 1/16W YAGEO	
R1734	061G0402103 Y	RST CHIPR 10KOHM +-5% 1/16W YAGEO	
R1733	061G0402103 Y	RST CHIPR 10KOHM +-5% 1/16W YAGEO	
R1729	061G0402103 Y	RST CHIPR 10KOHM +-5% 1/16W YAGEO	
R1728	061G0402103 Y	RST CHIPR 10KOHM +-5% 1/16W YAGEO	
R1124	061G0402103 JT	RST CHIP 10K 1/16W 5% TZAI YUAN	
R1124	061G0402103 JY	RST CHIPR 10KOHM +-5% 1/16W YAGEO	
R4287	061G0402104 Y	RST CHIPR 100KOHM +-5% 1/16W YAGEO	
R1241	061G0402104 Y	RST CHIPR 100KOHM +-5% 1/16W YAGEO	
R1240	061G0402104 Y	RST CHIPR 100KOHM +-5% 1/16W YAGEO	
R1735	061G0402123 T	RST CHIP 12K 1/16W 5%	
R1732	061G0402123 T	RST CHIP 12K 1/16W 5%	
R1731	061G0402123 T	RST CHIP 12K 1/16W 5%	
R1730	061G0402123 T	RST CHIP 12K 1/16W 5%	
R1719	061G0402123 T	RST CHIP 12K 1/16W 5%	
R1717	061G0402123 T	RST CHIP 12K 1/16W 5%	
R1716	061G0402123 T	RST CHIP 12K 1/16W 5%	
R1714	061G0402123 T	RST CHIP 12K 1/16W 5%	
R1712	061G0402123 T	RST CHIP 12K 1/16W 5%	
R1710	061G0402123 T	RST CHIP 12K 1/16W 5%	
R1708	061G0402123 T	RST CHIP 12K 1/16W 5%	
R1706	061G0402123 T	RST CHIP 12K 1/16W 5%	

英华家电维修资料软件专用 购买QQ:505966338

R1706	061G0402123 Y	RST CHIP 12K 1/16W 5%	
R1708	061G0402123 Y	RST CHIP 12K 1/16W 5%	
R1710	061G0402123 Y	RST CHIP 12K 1/16W 5%	
R1712	061G0402123 Y	RST CHIP 12K 1/16W 5%	
R1714	061G0402123 Y	RST CHIP 12K 1/16W 5%	
R1716	061G0402123 Y	RST CHIP 12K 1/16W 5%	
R1717	061G0402123 Y	RST CHIP 12K 1/16W 5%	
R1719	061G0402123 Y	RST CHIP 12K 1/16W 5%	
R1730	061G0402123 Y	RST CHIP 12K 1/16W 5%	
R1731	061G0402123 Y	RST CHIP 12K 1/16W 5%	
R1732	061G0402123 Y	RST CHIP 12K 1/16W 5%	
R1735	061G0402123 Y	RST CHIP 12K 1/16W 5%	
R4410	061G04021500FT	RST CHIP 150R 1/16W 1%	
R1221	061G0402153 T	RST CHIP 15K 1/16W 5%	
R1807	061G0402153 T	RST CHIP 15K 1/16W 5%	
R1808	061G0402153 T	RST CHIP 15K 1/16W 5%	
R4279	061G0402153 T	RST CHIP 15K 1/16W 5%	
R4280	061G0402153 T	RST CHIP 15K 1/16W 5%	
R1221	061G0402153 Y	RST CHIP 15K 1/16W 5%	
R1807	061G0402153 Y	RST CHIP 15K 1/16W 5%	
R1808	061G0402153 Y	RST CHIP 15K 1/16W 5%	
R4279	061G0402153 Y	RST CHIP 15K 1/16W 5%	
R4280	061G0402153 Y	RST CHIP 15K 1/16W 5%	
R1513	061G04022009FT	RST CHIP R 20OHM +-1% 1/16W	
R1514	061G04022009FT	RST CHIP R 20OHM +-1% 1/16W	
R1515	061G04022009FT	RST CHIP R 20OHM +-1% 1/16W	
R1519	061G04022009FT	RST CHIP R 20OHM +-1% 1/16W	
R1522	061G04022009FT	RST CHIP R 20OHM +-1% 1/16W	
R1523	061G04022009FT	RST CHIP R 20OHM +-1% 1/16W	
R1527	061G04022009FT	RST CHIP R 20OHM +-1% 1/16W	
R1528	061G04022009FT	RST CHIP R 20OHM +-1% 1/16W	
R1513	061G04022009FY	RST CHIP R 20OHM +-1% 1/16W	
R1514	061G04022009FY	RST CHIP R 20OHM +-1% 1/16W	
R1515	061G04022009FY	RST CHIP R 20OHM +-1% 1/16W	
R1519	061G04022009FY	RST CHIP R 20OHM +-1% 1/16W	
R1522	061G04022009FY	RST CHIP R 20OHM +-1% 1/16W	
R1523	061G04022009FY	RST CHIP R 20OHM +-1% 1/16W	
R1527	061G04022009FY	RST CHIP R 20OHM +-1% 1/16W	
R1528	061G04022009FY	RST CHIP R 20OHM +-1% 1/16W	
R1501	061G0402202 Y	RST CHIPR 2KOHM +-5% 1/16W YAGEO	
R1502	061G0402202 Y	RST CHIPR 2KOHM +-5% 1/16W YAGEO	
R1503	061G0402220 Y	RST CHIP 22R 1/16W 5%	
R1505	061G0402220 Y	RST CHIP 22R 1/16W 5%	
R1507	061G0402220 Y	RST CHIP 22R 1/16W 5%	
R1508	061G0402220 Y	RST CHIP 22R 1/16W 5%	
R1602	061G0402220 Y	RST CHIP 22R 1/16W 5%	
R1603	061G0402220 Y	RST CHIP 22R 1/16W 5%	

英华家电维修资料软件专用 购买QQ:505966338

R4217	061G0402220 Y	RST CHIP 22R 1/16W 5%	
R4218	061G0402220 Y	RST CHIP 22R 1/16W 5%	
R4219	061G0402220 Y	RST CHIP 22R 1/16W 5%	
R4220	061G0402220 Y	RST CHIP 22R 1/16W 5%	
R4273	061G0402220 Y	RST CHIP 22R 1/16W 5%	
R4403	061G0402220 Y	RST CHIP 22R 1/16W 5%	
R4404	061G0402220 Y	RST CHIP 22R 1/16W 5%	
R4405	061G0402220 Y	RST CHIP 22R 1/16W 5%	
R4411	061G0402220 Y	RST CHIP 22R 1/16W 5%	
R1750	061G0402222 Y	RST CHIPR 2.2KOHM +-5% 1/16W YAGEO	
R1419	061G0402222 Y	RST CHIPR 2.2KOHM +-5% 1/16W YAGEO	
R1420	061G0402222 Y	RST CHIPR 2.2KOHM +-5% 1/16W YAGEO	
R1546	061G0402222 Y	RST CHIPR 2.2KOHM +-5% 1/16W YAGEO	
R1547	061G0402222 Y	RST CHIPR 2.2KOHM +-5% 1/16W YAGEO	
R1747	061G0402222 Y	RST CHIPR 2.2KOHM +-5% 1/16W YAGEO	
R1748	061G0402222 Y	RST CHIPR 2.2KOHM +-5% 1/16W YAGEO	
R1749	061G0402222 Y	RST CHIPR 2.2KOHM +-5% 1/16W YAGEO	
R6138	061G0402223 T	RST CHIP 22K 1/16W 5%	
R6137	061G0402223 T	RST CHIP 22K 1/16W 5%	
R6134	061G0402223 T	RST CHIP 22K 1/16W 5%	
R6133	061G0402223 T	RST CHIP 22K 1/16W 5%	
R1628	061G0402223 T	RST CHIP 22K 1/16W 5%	
R1561	061G0402223 T	RST CHIP 22K 1/16W 5%	
R1560	061G0402223 T	RST CHIP 22K 1/16W 5%	
R1229	061G0402223 T	RST CHIP 22K 1/16W 5%	
R1228	061G0402223 T	RST CHIP 22K 1/16W 5%	
R6138	061G0402223 Y	RST CHIPR 22KOHM +-5% 1/16W YAGEO	
R6137	061G0402223 Y	RST CHIPR 22KOHM +-5% 1/16W YAGEO	
R6134	061G0402223 Y	RST CHIPR 22KOHM +-5% 1/16W YAGEO	
R6133	061G0402223 Y	RST CHIPR 22KOHM +-5% 1/16W YAGEO	
R1628	061G0402223 Y	RST CHIPR 22KOHM +-5% 1/16W YAGEO	
R1561	061G0402223 Y	RST CHIPR 22KOHM +-5% 1/16W YAGEO	
R1560	061G0402223 Y	RST CHIPR 22KOHM +-5% 1/16W YAGEO	
R1229	061G0402223 Y	RST CHIPR 22KOHM +-5% 1/16W YAGEO	
R1228	061G0402223 Y	RST CHIPR 22KOHM +-5% 1/16W YAGEO	
R7203	061G0402223 JT	RST CHIP 22K 1/16W 5% TZAI YUAN	
R7203	061G0402223 JT	RST CHIP 22K 1/16W 5% TZAI YUAN	
R1401	061G0402272 T	RST CHIP 2K7 1/16W 5%	
R1403	061G0402272 T	RST CHIP 2K7 1/16W 5%	
R7513	061G0402272 T	RST CHIP 2K7 1/16W 5%	
R4255	061G0402273 T	RST CHIP 27K 1/16W 5%	
R4255	061G0402273 Y	RST CHIP 27K 1/16W 5%	
R4227	061G04023301FT	RST CHIP 3K3 1/16W 1%	
R4227	061G04023301FY	RST CHIP 3K3 1/16W 1%	
R4249	061G0402333 T	RST CHIP 33K 1/16W 5%	
R4262	061G0402333 T	RST CHIP 33K 1/16W 5%	
R4276	061G0402333 T	RST CHIP 33K 1/16W 5%	

英华家电维修资料软件专用 购买QQ:505966338

R6113	061G0402333 T	RST CHIP 33K 1/16W 5%	
R6114	061G0402333 T	RST CHIP 33K 1/16W 5%	
R6149	061G0402333 T	RST CHIP 33K 1/16W 5%	
R6150	061G0402333 T	RST CHIP 33K 1/16W 5%	
R4247	061G0402333 T	RST CHIP 33K 1/16W 5%	
R1239	061G0402333 T	RST CHIP 33K 1/16W 5%	
R1238	061G0402333 T	RST CHIP 33K 1/16W 5%	
R1237	061G0402333 T	RST CHIP 33K 1/16W 5%	
R1236	061G0402333 T	RST CHIP 33K 1/16W 5%	
R6150	061G0402333 Y	RST CHIPR 33KOHM +-5% 1/16W YAGEO	
R6149	061G0402333 Y	RST CHIPR 33KOHM +-5% 1/16W YAGEO	
R6114	061G0402333 Y	RST CHIPR 33KOHM +-5% 1/16W YAGEO	
R6113	061G0402333 Y	RST CHIPR 33KOHM +-5% 1/16W YAGEO	
R4276	061G0402333 Y	RST CHIPR 33KOHM +-5% 1/16W YAGEO	
R4262	061G0402333 Y	RST CHIPR 33KOHM +-5% 1/16W YAGEO	
R1237	061G0402333 Y	RST CHIPR 33KOHM +-5% 1/16W YAGEO	
R1236	061G0402333 Y	RST CHIPR 33KOHM +-5% 1/16W YAGEO	
R4249	061G0402333 Y	RST CHIPR 33KOHM +-5% 1/16W YAGEO	
R4247	061G0402333 Y	RST CHIPR 33KOHM +-5% 1/16W YAGEO	
R1239	061G0402333 Y	RST CHIPR 33KOHM +-5% 1/16W YAGEO	
R1238	061G0402333 Y	RST CHIPR 33KOHM +-5% 1/16W YAGEO	
R4208	061G04023900FT	RST CHIP 390R 1/16W 1%	
R4208	061G04023900FY	RST CHIPR 390 OHM +-1% 1/16W YAGEO	
R1220	061G0402393 Y	RST CHIP 39K 1/16W 5%	
R4284	061G04024300FT	RST CHIP 430R 1/16W 1%	
R1245	061G0402470 Y	RST CHIP 47R 1/16W 5%	
R1250	061G0402470 Y	RST CHIP 47R 1/16W 5%	
R1426	061G0402470 Y	RST CHIP 47R 1/16W 5%	
R1427	061G0402470 Y	RST CHIP 47R 1/16W 5%	
R1428	061G0402470 Y	RST CHIP 47R 1/16W 5%	
R4239	061G0402470 Y	RST CHIP 47R 1/16W 5%	
R4240	061G0402470 Y	RST CHIP 47R 1/16W 5%	
R4241	061G0402470 Y	RST CHIP 47R 1/16W 5%	
R4242	061G0402470 Y	RST CHIP 47R 1/16W 5%	
R4243	061G0402470 Y	RST CHIP 47R 1/16W 5%	
R4245	061G0402470 Y	RST CHIP 47R 1/16W 5%	
R4246	061G0402470 Y	RST CHIP 47R 1/16W 5%	
R4248	061G0402470 Y	RST CHIP 47R 1/16W 5%	
R1106	061G0402470 Y	RST CHIP 47R 1/16W 5%	
R1204	061G0402470 Y	RST CHIP 47R 1/16W 5%	
R1205	061G0402470 Y	RST CHIP 47R 1/16W 5%	
R1206	061G0402470 Y	RST CHIP 47R 1/16W 5%	
R1211	061G0402470 Y	RST CHIP 47R 1/16W 5%	
R1212	061G0402470 Y	RST CHIP 47R 1/16W 5%	
R1244	061G0402470 Y	RST CHIP 47R 1/16W 5%	
R4254	061G0402470 Y	RST CHIP 47R 1/16W 5%	
R4258	061G0402470 Y	RST CHIP 47R 1/16W 5%	

英华家电维修资料软件专用 购买QQ:505966338

R4263	061G0402470 Y	RST CHIP 47R 1/16W 5%	
R4264	061G0402470 Y	RST CHIP 47R 1/16W 5%	
R4265	061G0402470 Y	RST CHIP 47R 1/16W 5%	
R4266	061G0402470 Y	RST CHIP 47R 1/16W 5%	
R4267	061G0402470 Y	RST CHIP 47R 1/16W 5%	
R4268	061G0402470 Y	RST CHIP 47R 1/16W 5%	
R4274	061G0402470 Y	RST CHIP 47R 1/16W 5%	
R4277	061G0402470 Y	RST CHIP 47R 1/16W 5%	
R4282	061G0402470 Y	RST CHIP 47R 1/16W 5%	
R4301	061G0402470 Y	RST CHIP 47R 1/16W 5%	
R4304	061G0402470 Y	RST CHIP 47R 1/16W 5%	
R4306	061G0402470 Y	RST CHIP 47R 1/16W 5%	
R4309	061G0402470 Y	RST CHIP 47R 1/16W 5%	
R7214	061G0402470 Y	RST CHIP 47R 1/16W 5%	
R7319	061G0402470 Y	RST CHIP 47R 1/16W 5%	
R1213	061G0402470 Y	RST CHIP 47R 1/16W 5%	
R1215	061G0402470 Y	RST CHIP 47R 1/16W 5%	
R1207	061G0402471 T	RST CHIP 470R 1/16W 5%	
R1214	061G0402471 T	RST CHIP 470R 1/16W 5%	
R1218	061G0402471 T	RST CHIP 470R 1/16W 5%	
R1429	061G0402471 T	RST CHIP 470R 1/16W 5%	
R1429	061G0402471 Y	RST CHIPR 470 OHM +-5% 1/16W YAGEO	
R1218	061G0402471 Y	RST CHIPR 470 OHM +-5% 1/16W YAGEO	
R1214	061G0402471 Y	RST CHIPR 470 OHM +-5% 1/16W YAGEO	
R1207	061G0402471 Y	RST CHIPR 470 OHM +-5% 1/16W YAGEO	
R1506	061G0402472 Y	RST CHIPR 4.7KOHM +-5% 1/16W YAGEO	
R1516	061G0402472 Y	RST CHIPR 4.7KOHM +-5% 1/16W YAGEO	
R1517	061G0402472 Y	RST CHIPR 4.7KOHM +-5% 1/16W YAGEO	
R1520	061G0402472 Y	RST CHIPR 4.7KOHM +-5% 1/16W YAGEO	
R1524	061G0402472 Y	RST CHIPR 4.7KOHM +-5% 1/16W YAGEO	
R1540	061G0402472 Y	RST CHIPR 4.7KOHM +-5% 1/16W YAGEO	
R7217	061G0402472 Y	RST CHIPR 4.7KOHM +-5% 1/16W YAGEO	
R4259	061G0402472 Y	RST CHIPR 4.7KOHM +-5% 1/16W YAGEO	
R4244	061G0402472 Y	RST CHIPR 4.7KOHM +-5% 1/16W YAGEO	
R1626	061G0402472 Y	RST CHIPR 4.7KOHM +-5% 1/16W YAGEO	
R1625	061G0402472 Y	RST CHIPR 4.7KOHM +-5% 1/16W YAGEO	
R1542	061G0402472 Y	RST CHIPR 4.7KOHM +-5% 1/16W YAGEO	
R1541	061G0402472 Y	RST CHIPR 4.7KOHM +-5% 1/16W YAGEO	
R1231	061G0402473 Y	RST CHIPR 47KOHM +-5% 1/16W YAGEO	
R1232	061G0402473 Y	RST CHIPR 47KOHM +-5% 1/16W YAGEO	
R1531	061G0402473 Y	RST CHIPR 47KOHM +-5% 1/16W YAGEO	
R6139	061G0402473 Y	RST CHIPR 47KOHM +-5% 1/16W YAGEO	
R6140	061G0402473 Y	RST CHIPR 47KOHM +-5% 1/16W YAGEO	
R6144	061G0402473 Y	RST CHIPR 47KOHM +-5% 1/16W YAGEO	
R6145	061G0402473 Y	RST CHIPR 47KOHM +-5% 1/16W YAGEO	
R1756	061G0402474 T	RST CHIP 470K 1/16W 5%	
R1755	061G0402474 T	RST CHIP 470K 1/16W 5%	

英华家电维修资料软件专用 购买QQ:505966338

R1754	061G0402474 T	RST CHIP 470K 1/16W 5%	
R1753	061G0402474 T	RST CHIP 470K 1/16W 5%	
R1752	061G0402474 T	RST CHIP 470K 1/16W 5%	
R1751	061G0402474 T	RST CHIP 470K 1/16W 5%	
R1746	061G0402474 T	RST CHIP 470K 1/16W 5%	
R1745	061G0402474 T	RST CHIP 470K 1/16W 5%	
R1744	061G0402474 T	RST CHIP 470K 1/16W 5%	
R1743	061G0402474 T	RST CHIP 470K 1/16W 5%	
R1742	061G0402474 T	RST CHIP 470K 1/16W 5%	
R1741	061G0402474 T	RST CHIP 470K 1/16W 5%	
R1756	061G0402474 Y	RST CHIP 470K 1/16W 5%	
R1755	061G0402474 Y	RST CHIP 470K 1/16W 5%	
R1754	061G0402474 Y	RST CHIP 470K 1/16W 5%	
R1753	061G0402474 Y	RST CHIP 470K 1/16W 5%	
R1752	061G0402474 Y	RST CHIP 470K 1/16W 5%	
R1751	061G0402474 Y	RST CHIP 470K 1/16W 5%	
R1746	061G0402474 Y	RST CHIP 470K 1/16W 5%	
R1745	061G0402474 Y	RST CHIP 470K 1/16W 5%	
R1744	061G0402474 Y	RST CHIP 470K 1/16W 5%	
R1743	061G0402474 Y	RST CHIP 470K 1/16W 5%	
R1742	061G0402474 Y	RST CHIP 470K 1/16W 5%	
R1741	061G0402474 Y	RST CHIP 470K 1/16W 5%	
R7302	061G0402479 T	RST CHIP 4R7 1/16W 5%	
R7301	061G0402479 T	RST CHIP 4R7 1/16W 5%	
R4409	061G04025609FT	RST CHIP 56R 1/16W 1%	
R4408	061G04025609FT	RST CHIP 56R 1/16W 1%	
R4407	061G04025609FT	RST CHIP 56R 1/16W 1%	
R4406	061G04025609FT	RST CHIP 56R 1/16W 1%	
R4406	061G04025609FY	RST CHIP 56R 1/16W 1%	
R4407	061G04025609FY	RST CHIP 56R 1/16W 1%	
R4408	061G04025609FY	RST CHIP 56R 1/16W 1%	
R4409	061G04025609FY	RST CHIP 56R 1/16W 1%	
R4228	061G0402682 T	RST CHIP 6K8 1/16W 5%	
R4228	061G0402682 Y	RST CHIP 6K8 1/16W 5%	
R1242	061G04027509FT	RST CHIP 75R 1/16W 1%	
R1243	061G04027509FT	RST CHIP 75R 1/16W 1%	
R1249	061G04027509FT	RST CHIP 75R 1/16W 1%	
R1254	061G04027509FT	RST CHIP 75R 1/16W 1%	
R1255	061G04027509FT	RST CHIP 75R 1/16W 1%	
R1256	061G04027509FT	RST CHIP 75R 1/16W 1%	
R1423	061G04027509FT	RST CHIP 75R 1/16W 1%	
R1424	061G04027509FT	RST CHIP 75R 1/16W 1%	
R1425	061G04027509FT	RST CHIP 75R 1/16W 1%	
R1222	061G04027509FT	RST CHIP 75R 1/16W 1%	
R1216	061G04027509FT	RST CHIP 75R 1/16W 1%	
R1210	061G04027509FT	RST CHIP 75R 1/16W 1%	
R1209	061G04027509FT	RST CHIP 75R 1/16W 1%	

英华家电维修资料软件专用 购买QQ:505966338

R1208	061G04027509FT	RST CHIP 75R 1/16W 1%	
R1203	061G04027509FT	RST CHIP 75R 1/16W 1%	
R1202	061G04027509FT	RST CHIP 75R 1/16W 1%	
R1201	061G04027509FT	RST CHIP 75R 1/16W 1%	
R1105	061G04027509FT	RST CHIP 75R 1/16W 1%	
R1425	061G04027509FY	RST CHIPR 75 OHM +-1% 1/16W YAGEO	
R1424	061G04027509FY	RST CHIPR 75 OHM +-1% 1/16W YAGEO	
R1423	061G04027509FY	RST CHIPR 75 OHM +-1% 1/16W YAGEO	
R1256	061G04027509FY	RST CHIPR 75 OHM +-1% 1/16W YAGEO	
R1255	061G04027509FY	RST CHIPR 75 OHM +-1% 1/16W YAGEO	
R1254	061G04027509FY	RST CHIPR 75 OHM +-1% 1/16W YAGEO	
R1249	061G04027509FY	RST CHIPR 75 OHM +-1% 1/16W YAGEO	
R1243	061G04027509FY	RST CHIPR 75 OHM +-1% 1/16W YAGEO	
R1242	061G04027509FY	RST CHIPR 75 OHM +-1% 1/16W YAGEO	
R1105	061G04027509FY	RST CHIPR 75 OHM +-1% 1/16W YAGEO	
R1201	061G04027509FY	RST CHIPR 75 OHM +-1% 1/16W YAGEO	
R1202	061G04027509FY	RST CHIPR 75 OHM +-1% 1/16W YAGEO	
R1203	061G04027509FY	RST CHIPR 75 OHM +-1% 1/16W YAGEO	
R1208	061G04027509FY	RST CHIPR 75 OHM +-1% 1/16W YAGEO	
R1209	061G04027509FY	RST CHIPR 75 OHM +-1% 1/16W YAGEO	
R1210	061G04027509FY	RST CHIPR 75 OHM +-1% 1/16W YAGEO	
R1216	061G04027509FY	RST CHIPR 75 OHM +-1% 1/16W YAGEO	
R1222	061G04027509FY	RST CHIPR 75 OHM +-1% 1/16W YAGEO	
R4293	061G0603000 T	RST CHIP MAX 0R05 1/10W	
R1806	061G0603000 T	RST CHIP MAX 0R05 1/10W	
R1805	061G0603000 T	RST CHIP MAX 0R05 1/10W	
R1510	061G0603000 T	RST CHIP MAX 0R05 1/10W	
R1431	061G0603000 T	RST CHIP MAX 0R05 1/10W	
R1431	061G0603000 Y	RST CHIP MAX 0R05 1/10W YAGEO	
R1510	061G0603000 Y	RST CHIP MAX 0R05 1/10W YAGEO	
R1805	061G0603000 Y	RST CHIP MAX 0R05 1/10W YAGEO	
R1806	061G0603000 Y	RST CHIP MAX 0R05 1/10W YAGEO	
R4293	061G0603000 Y	RST CHIP MAX 0R05 1/10W YAGEO	
R7123	061G06031000FT	RST CHIP 100R 1/10W 1%	
R1223	061G06031000FT	RST CHIP 100R 1/10W 1%	
R7123	061G06031000FY	RST CHIPR 100 OHM +-1% 1/10W YAGEO	
R1223	061G06031000FY	RST CHIPR 100 OHM +-1% 1/10W YAGEO	
R7120	061G06031002FT	RST CHIP 10K 1/10W 1%	
R7131	061G06031002FT	RST CHIP 10K 1/10W 1%	
R7120	061G06031002FY	RST CHIPR 10KOHM +-1% 1/10W YAGEO	
R7131	061G06031002FY	RST CHIPR 10KOHM +-1% 1/10W YAGEO	
R7208	061G0603101 T	RST CHIP 100R 1/10W 5%	
R6117	061G0603101 T	RST CHIP 100R 1/10W 5%	
R4285	061G0603101 T	RST CHIP 100R 1/10W 5%	
R4230	061G0603101 T	RST CHIP 100R 1/10W 5%	
R4230	061G0603101 Y	RST CHIPR 100 OHM +-5% 1/10W YAGEO	
R4285	061G0603101 Y	RST CHIPR 100 OHM +-5% 1/10W YAGEO	

英华家电维修资料软件专用 购买QQ:505966338

R6117	061G0603101 Y	RST CHIPR 100 OHM +-5% 1/10W YAGEO	
R7208	061G0603101 Y	RST CHIPR 100 OHM +-5% 1/10W YAGEO	
R4303	061G0603102 T	RST CHIP 1K 1/10W 5%	
R4308	061G0603102 T	RST CHIP 1K 1/10W 5%	
R6102	061G0603102 T	RST CHIP 1K 1/10W 5%	
R7102	061G0603102 T	RST CHIP 1K 1/10W 5%	
R7116	061G0603102 T	RST CHIP 1K 1/10W 5%	
R7116	061G0603102 Y	RST CHIPR 1KOHM +-5% 1/10W YAGEO	
R7102	061G0603102 Y	RST CHIPR 1KOHM +-5% 1/10W YAGEO	
R6102	061G0603102 Y	RST CHIPR 1KOHM +-5% 1/10W YAGEO	
R4308	061G0603102 Y	RST CHIPR 1KOHM +-5% 1/10W YAGEO	
R4303	061G0603102 Y	RST CHIPR 1KOHM +-5% 1/10W YAGEO	
R4203	061G0603103 T	RST CHIP 10K 1/10W 5%	
R4290	061G0603103 T	RST CHIP 10K 1/10W 5%	
R7209	061G0603103 T	RST CHIP 10K 1/10W 5%	
R7206	061G0603103 T	RST CHIP 10K 1/10W 5%	
R7205	061G0603103 T	RST CHIP 10K 1/10W 5%	
R7115	061G0603103 T	RST CHIP 10K 1/10W 5%	
R7105	061G0603103 T	RST CHIP 10K 1/10W 5%	
R4420	061G0603103 T	RST CHIP 10K 1/10W 5%	
R4402	061G0603103 T	RST CHIP 10K 1/10W 5%	
R4292	061G0603103 T	RST CHIP 10K 1/10W 5%	
R4291	061G0603103 T	RST CHIP 10K 1/10W 5%	
R4401	061G0603103 T	RST CHIP 10K 1/10W 5%	
R4294	061G0603103 T	RST CHIP 10K 1/10W 5%	
R4203	061G0603103 Y	RST CHIPR 10KOHM +-5% 1/10W YAGEO	
R4290	061G0603103 Y	RST CHIPR 10KOHM +-5% 1/10W YAGEO	
R4291	061G0603103 Y	RST CHIPR 10KOHM +-5% 1/10W YAGEO	
R4292	061G0603103 Y	RST CHIPR 10KOHM +-5% 1/10W YAGEO	
R4294	061G0603103 Y	RST CHIPR 10KOHM +-5% 1/10W YAGEO	
R4401	061G0603103 Y	RST CHIPR 10KOHM +-5% 1/10W YAGEO	
R4402	061G0603103 Y	RST CHIPR 10KOHM +-5% 1/10W YAGEO	
R4420	061G0603103 Y	RST CHIPR 10KOHM +-5% 1/10W YAGEO	
R7105	061G0603103 Y	RST CHIPR 10KOHM +-5% 1/10W YAGEO	
R7115	061G0603103 Y	RST CHIPR 10KOHM +-5% 1/10W YAGEO	
R7205	061G0603103 Y	RST CHIPR 10KOHM +-5% 1/10W YAGEO	
R7206	061G0603103 Y	RST CHIPR 10KOHM +-5% 1/10W YAGEO	
R7209	061G0603103 Y	RST CHIPR 10KOHM +-5% 1/10W YAGEO	
R1624	061G0603104 T	RST CHIP 100K 1/10W 5%	
R1631	061G0603104 T	RST CHIP 100K 1/10W 5%	
R1617	061G0603104 T	RST CHIP 100K 1/10W 5%	
R1618	061G0603104 T	RST CHIP 100K 1/10W 5%	
R1613	061G0603104 T	RST CHIP 100K 1/10W 5%	
R1614	061G0603104 T	RST CHIP 100K 1/10W 5%	
R1613	061G0603104 Y	RST CHIPR 100KOHM +-5% 1/10W YAGEO	
R1614	061G0603104 Y	RST CHIPR 100KOHM +-5% 1/10W YAGEO	
R1617	061G0603104 Y	RST CHIPR 100KOHM +-5% 1/10W YAGEO	

英华家电维修资料软件专用 购买QQ:505966338

R1618	061G0603104 Y	RST CHIPR 100KOHM +-5% 1/10W YAGEO	
R1624	061G0603104 Y	RST CHIPR 100KOHM +-5% 1/10W YAGEO	
R1631	061G0603104 Y	RST CHIPR 100KOHM +-5% 1/10W YAGEO	
R7124	061G06031100FT	RST CHIP 110R 1/10W 1%	
R7124	061G06031100FY	RST CHIPR 110 OHM +-1% 1/10W YAGEO	
R7125	061G06031200FY	RST CHIPR 120 OHM +-1% 1/10W YAGEO	
R7140	061G06031200FY	RST CHIPR 120 OHM +-1% 1/10W YAGEO	
R4229	061G0603153 T	RST CHIP 15K 1/10W 5%	
R4229	061G0603153 Y	RST CHIPR 15KOHM +-5% 1/10W YAGEO	
R1726	061G0603181 T	RST CHIP 180R 1/10W 5%	
R1726	061G0603181 Y	RST CHIPR 180 OHM +-5% 1/10W YAGEO	
R6119	061G0603182 T	RST CHIP 1K8 1/10W 5%	
R6119	061G0603182 Y	RST CHIPR 1.8KOHM +-5% 1/10W YAGEO	
R6104	061G0603183 T	RST CHIP 18K 1/10W 5%	
R6104	061G0603183 Y	RST CHIPR 18KOHM +-5% 1/10W YAGEO	
R7137	061G06032000FT	RST CHIP 200R 1/10W 1%	
R7141	061G06032000FT	RST CHIP 200R 1/10W 1%	
R7137	061G06032000FY	RST CHIPR 200 OHM +-1% 1/10W YAGEO	
R7141	061G06032000FY	RST CHIPR 200 OHM +-1% 1/10W YAGEO	
R7128	061G0603203 T	RST CHIP 20K 1/10W 5%	
R7128	061G0603203 Y	RST CHIPR 20KOHM +-5% 1/10W YAGEO	
R1553	061G06032701FT	RST CHIP 2K7 1/10W 1%	
R7119	061G06032701FT	RST CHIP 2K7 1/10W 1%	
R1553	061G06032701FY	RST CHIPR 2.7KOHM +-1% 1/10W YAGEO	
R7119	061G06032701FY	RST CHIPR 2.7KOHM +-1% 1/10W YAGEO	
R1633	061G0603271 JW	RST CHIPR 270OHM 1/10W WALSIN	
R1632	061G0603271 JW	RST CHIPR 270OHM 1/10W WALSIN	
R1630	061G0603271 JW	RST CHIPR 270OHM 1/10W WALSIN	
R1629	061G0603271 JW	RST CHIPR 270OHM 1/10W WALSIN	
R1619	061G0603271 JW	RST CHIPR 270OHM 1/10W WALSIN	
R1615	061G0603271 JW	RST CHIPR 270OHM 1/10W WALSIN	
R1227	061G0603330 T	RST CHIP 33R 1/10W 5%	
R6112	061G0603330 T	RST CHIP 33R 1/10W 5%	
R6148	061G0603330 T	RST CHIP 33R 1/10W 5%	
R1227	061G0603330 Y	RST CHIPR 33 OHM +-5% 1/10W YAGEO	
R6112	061G0603330 Y	RST CHIPR 33 OHM +-5% 1/10W YAGEO	
R6148	061G0603330 Y	RST CHIPR 33 OHM +-5% 1/10W YAGEO	
R1224	061G06033309FT	RST CHIP 33R 1/10W 1%	
R1224	061G06033309FY	RST CHIPR 33 OHM +-1% 1/10W YAGEO	
R7130	061G06034302FT	RST CHIPR 43KOHM 1% 1/10W TZAI YUAN	
R7130	061G06034302FY	RST CHIPR 43KOHM +-1% 1/10W YAGEO	
R6118	061G0603471 T	RST CHIP 470R 1/10W 5%	
R6118	061G0603471 Y	RST CHIPR 470 OHM +-5% 1/10W YAGEO	
R7213	061G0603473 T	RST CHIP 47K 1/10W 5%	
R7138	061G0603473 T	RST CHIP 47K 1/10W 5%	
R7101	061G0603473 T	RST CHIP 47K 1/10W 5%	
R6147	061G0603473 T	RST CHIP 47K 1/10W 5%	

英华家电维修资料软件专用 购买QQ:505966338

R6111	061G0603473 T	RST CHIP 47K 1/10W 5%	
R6101	061G0603473 T	RST CHIP 47K 1/10W 5%	
R1634	061G0603473 T	RST CHIP 47K 1/10W 5%	
R1233	061G0603473 T	RST CHIP 47K 1/10W 5%	
R1616	061G0603473 T	RST CHIP 47K 1/10W 5%	
R1620	061G0603473 T	RST CHIP 47K 1/10W 5%	
R1621	061G0603473 T	RST CHIP 47K 1/10W 5%	
R1622	061G0603473 T	RST CHIP 47K 1/10W 5%	
R1623	061G0603473 T	RST CHIP 47K 1/10W 5%	
R7213	061G0603473 Y	RST CHIPR 47KOHM +-5% 1/10W YAGEO	
R7138	061G0603473 Y	RST CHIPR 47KOHM +-5% 1/10W YAGEO	
R7101	061G0603473 Y	RST CHIPR 47KOHM +-5% 1/10W YAGEO	
R6147	061G0603473 Y	RST CHIPR 47KOHM +-5% 1/10W YAGEO	
R6111	061G0603473 Y	RST CHIPR 47KOHM +-5% 1/10W YAGEO	
R6101	061G0603473 Y	RST CHIPR 47KOHM +-5% 1/10W YAGEO	
R1634	061G0603473 Y	RST CHIPR 47KOHM +-5% 1/10W YAGEO	
R1623	061G0603473 Y	RST CHIPR 47KOHM +-5% 1/10W YAGEO	
R1622	061G0603473 Y	RST CHIPR 47KOHM +-5% 1/10W YAGEO	
R1621	061G0603473 Y	RST CHIPR 47KOHM +-5% 1/10W YAGEO	
R1620	061G0603473 Y	RST CHIPR 47KOHM +-5% 1/10W YAGEO	
R1616	061G0603473 Y	RST CHIPR 47KOHM +-5% 1/10W YAGEO	
R1233	061G0603473 Y	RST CHIPR 47KOHM +-5% 1/10W YAGEO	
R6105	061G0603474 T	RST CHIP 470K 1/10W 5%	
R6105	061G0603474 Y	RST CHIPR 470KOHM +-5% 1/10W YAGEO	
R6103	061G0603563 T	RST CHIP 56K 1/10W 5%	
R7103	061G0603563 T	RST CHIP 56K 1/10W 5%	
R7104	061G0603563 T	RST CHIP 56K 1/10W 5%	
R7113	061G0603563 T	RST CHIP 56K 1/10W 5%	
R7117	061G0603563 T	RST CHIP 56K 1/10W 5%	
R7127	061G0603563 T	RST CHIP 56K 1/10W 5%	
R7139	061G0603563 T	RST CHIP 56K 1/10W 5%	
R6103	061G0603563 Y	RST CHIPR 56KOHM +-5% 1/10W YAGEO	
R7103	061G0603563 Y	RST CHIPR 56KOHM +-5% 1/10W YAGEO	
R7104	061G0603563 Y	RST CHIPR 56KOHM +-5% 1/10W YAGEO	
R7113	061G0603563 Y	RST CHIPR 56KOHM +-5% 1/10W YAGEO	
R7117	061G0603563 Y	RST CHIPR 56KOHM +-5% 1/10W YAGEO	
R7127	061G0603563 Y	RST CHIPR 56KOHM +-5% 1/10W YAGEO	
R7139	061G0603563 Y	RST CHIPR 56KOHM +-5% 1/10W YAGEO	
R1727	061G06037509FT	RST CHIP 75R 1/10W 1%	
R1727	061G06037509FY	RST CHIPR 75 OHM +-1% 1/10W YAGEO	
R7121	061G0603822 T	RST CHIP 8K2 1/10W 5%	
R7121	061G0603822 Y	RST CHIPR 8.2KOHM +-5% 1/10W YAGEO	
R1722	061G0603911 T	RST CHIP 910R 1/10W 5%	
R1722	061G0603911 Y	RST CHIPR 910 OHM +-5% 1/10W YAGEO	
R6107	061G0805103 T	RST CHIP 10K 1/8W 5%	
R6106	061G0805103 T	RST CHIP 10K 1/8W 5%	
R6106	061G0805103 Y	RST CHIPR 10KOHM +-5% 1/8W YAGEO	

英华家电维修资料软件专用 购买QQ:505966338

R6107	061G0805103 Y	RST CHIPR 10KOHM +-5% 1/8W YAGEO	
R7118	061G0805229 T	RST CHIP 2R2 1/8W 5%	
R7129	061G0805229 T	RST CHIP 2R2 1/8W 5%	
R6666	061G12060007JF	RST CHIPR MAX0R05 7A 1/4W FENGHUA	
R6666	061G12060007JY	RST CHIPR MAX0R05 7A 1/4W YAGEO	
R6122	061G1206222 T	RST CHIP 2K2 1/4W 5%	
R6123	061G1206222 T	RST CHIP 2K2 1/4W 5%	
R6129	061G1206222 T	RST CHIP 2K2 1/4W 5%	
R6130	061G1206222 T	RST CHIP 2K2 1/4W 5%	
R6130	061G1206222 Y	RST CHIPR 2.2KOHM +-5% 1/4W YAGEO	
R6129	061G1206222 Y	RST CHIPR 2.2KOHM +-5% 1/4W YAGEO	
R6123	061G1206222 Y	RST CHIPR 2.2KOHM +-5% 1/4W YAGEO	
R6122	061G1206222 Y	RST CHIPR 2.2KOHM +-5% 1/4W YAGEO	
R6108	061T0402101 T	RST CHIP 100R 1/16W 5%	
R6109	061T0402101 T	RST CHIP 100R 1/16W 5%	
R6131	061T0402101 T	RST CHIP 100R 1/16W 5%	
R6132	061T0402101 T	RST CHIP 100R 1/16W 5%	
R7320	061T0402101 T	RST CHIP 100R 1/16W 5%	
R7321	061T0402101 T	RST CHIP 100R 1/16W 5%	
R7322	061T0402101 T	RST CHIP 100R 1/16W 5%	
R7401	061T0402101 T	RST CHIP 100R 1/16W 5%	
R7402	061T0402101 T	RST CHIP 100R 1/16W 5%	
R7404	061T0402101 T	RST CHIP 100R 1/16W 5%	
R7405	061T0402101 T	RST CHIP 100R 1/16W 5%	
R4423	061T0402101 T	RST CHIP 100R 1/16W 5%	
R1217	061T0402101 T	RST CHIP 100R 1/16W 5%	
R1225	061T0402101 T	RST CHIP 100R 1/16W 5%	
R1226	061T0402101 T	RST CHIP 100R 1/16W 5%	
R1421	061T0402101 T	RST CHIP 100R 1/16W 5%	
R1422	061T0402101 T	RST CHIP 100R 1/16W 5%	
R4207	061T0402101 T	RST CHIP 100R 1/16W 5%	
R4414	061T0402101 T	RST CHIP 100R 1/16W 5%	
R4415	061T0402101 T	RST CHIP 100R 1/16W 5%	
R4417	061T0402101 T	RST CHIP 100R 1/16W 5%	
R4421	061T0402101 T	RST CHIP 100R 1/16W 5%	
R4422	061T0402101 T	RST CHIP 100R 1/16W 5%	
R1504	061T0402102 T	RST CHIP 1K 1/16W 5%	
R1509	061T0402102 T	RST CHIP 1K 1/16W 5%	
R1512	061T0402102 T	RST CHIP 1K 1/16W 5%	
R1526	061T0402102 T	RST CHIP 1K 1/16W 5%	
R1723	061T0402102 T	RST CHIP 1K 1/16W 5%	
R1724	061T0402102 T	RST CHIP 1K 1/16W 5%	
R4223	061T0402102 T	RST CHIP 1K 1/16W 5%	
R4224	061T0402102 T	RST CHIP 1K 1/16W 5%	
R4225	061T0402102 T	RST CHIP 1K 1/16W 5%	
R7201	061T0402102 T	RST CHIP 1K 1/16W 5%	
R4272	061T0402103 T	RST CHIP 10K 1/16W 5%	

英华家电维修资料软件专用 购买QQ:505966338

R4271	061T0402103 T	RST CHIP 10K 1/16W 5%	
R4270	061T0402103 T	RST CHIP 10K 1/16W 5%	
R4269	061T0402103 T	RST CHIP 10K 1/16W 5%	
R4260	061T0402103 T	RST CHIP 10K 1/16W 5%	
R4256	061T0402103 T	RST CHIP 10K 1/16W 5%	
R4252	061T0402103 T	RST CHIP 10K 1/16W 5%	
R4237	061T0402103 T	RST CHIP 10K 1/16W 5%	
R4235	061T0402103 T	RST CHIP 10K 1/16W 5%	
R4234	061T0402103 T	RST CHIP 10K 1/16W 5%	
R4232	061T0402103 T	RST CHIP 10K 1/16W 5%	
R4222	061T0402103 T	RST CHIP 10K 1/16W 5%	
R4275	061T0402103 T	RST CHIP 10K 1/16W 5%	
R6146	061T0402103 T	RST CHIP 10K 1/16W 5%	
R6143	061T0402103 T	RST CHIP 10K 1/16W 5%	
R6142	061T0402103 T	RST CHIP 10K 1/16W 5%	
R6136	061T0402103 T	RST CHIP 10K 1/16W 5%	
R6135	061T0402103 T	RST CHIP 10K 1/16W 5%	
R6110	061T0402103 T	RST CHIP 10K 1/16W 5%	
R4310	061T0402103 T	RST CHIP 10K 1/16W 5%	
R4307	061T0402103 T	RST CHIP 10K 1/16W 5%	
R4302	061T0402103 T	RST CHIP 10K 1/16W 5%	
R4299	061T0402103 T	RST CHIP 10K 1/16W 5%	
R4281	061T0402103 T	RST CHIP 10K 1/16W 5%	
R4278	061T0402103 T	RST CHIP 10K 1/16W 5%	
R4221	061T0402103 T	RST CHIP 10K 1/16W 5%	
R1709	061T0402103 T	RST CHIP 10K 1/16W 5%	
R1707	061T0402103 T	RST CHIP 10K 1/16W 5%	
R1705	061T0402103 T	RST CHIP 10K 1/16W 5%	
R1627	061T0402103 T	RST CHIP 10K 1/16W 5%	
R1525	061T0402103 T	RST CHIP 10K 1/16W 5%	
R1521	061T0402103 T	RST CHIP 10K 1/16W 5%	
R1518	061T0402103 T	RST CHIP 10K 1/16W 5%	
R1430	061T0402103 T	RST CHIP 10K 1/16W 5%	
R1405	061T0402103 T	RST CHIP 10K 1/16W 5%	
R1248	061T0402103 T	RST CHIP 10K 1/16W 5%	
R1247	061T0402103 T	RST CHIP 10K 1/16W 5%	
R1230	061T0402103 T	RST CHIP 10K 1/16W 5%	
R1711	061T0402103 T	RST CHIP 10K 1/16W 5%	
R4128	061T0402103 T	RST CHIP 10K 1/16W 5%	
R4127	061T0402103 T	RST CHIP 10K 1/16W 5%	
R4122	061T0402103 T	RST CHIP 10K 1/16W 5%	
R4121	061T0402103 T	RST CHIP 10K 1/16W 5%	
R1734	061T0402103 T	RST CHIP 10K 1/16W 5%	
R1733	061T0402103 T	RST CHIP 10K 1/16W 5%	
R1729	061T0402103 T	RST CHIP 10K 1/16W 5%	
R1728	061T0402103 T	RST CHIP 10K 1/16W 5%	
R1720	061T0402103 T	RST CHIP 10K 1/16W 5%	

英华家电维修资料软件专用 购买QQ:505966338

R1718	061T0402103 T	RST CHIP 10K 1/16W 5%	
R1715	061T0402103 T	RST CHIP 10K 1/16W 5%	
R1713	061T0402103 T	RST CHIP 10K 1/16W 5%	
R1240	061T0402104 T	RST CHIP 100K 1/16W 5%	
R1241	061T0402104 T	RST CHIP 100K 1/16W 5%	
R4287	061T0402104 T	RST CHIP 100K 1/16W 5%	
R4410	061T04021500FY	RST CHIP 150R 1/16W 1%	
R1501	061T0402202 T	RST CHIP 2K 1/16W 5%	
R1502	061T0402202 T	RST CHIP 2K 1/16W 5%	
R4411	061T0402220 T	RST CHIP 22R 1/16W 5%	
R4405	061T0402220 T	RST CHIP 22R 1/16W 5%	
R4404	061T0402220 T	RST CHIP 22R 1/16W 5%	
R1503	061T0402220 T	RST CHIP 22R 1/16W 5%	
R1505	061T0402220 T	RST CHIP 22R 1/16W 5%	
R4403	061T0402220 T	RST CHIP 22R 1/16W 5%	
R4273	061T0402220 T	RST CHIP 22R 1/16W 5%	
R4220	061T0402220 T	RST CHIP 22R 1/16W 5%	
R4219	061T0402220 T	RST CHIP 22R 1/16W 5%	
R4218	061T0402220 T	RST CHIP 22R 1/16W 5%	
R4217	061T0402220 T	RST CHIP 22R 1/16W 5%	
R1603	061T0402220 T	RST CHIP 22R 1/16W 5%	
R1602	061T0402220 T	RST CHIP 22R 1/16W 5%	
R1508	061T0402220 T	RST CHIP 22R 1/16W 5%	
R1507	061T0402220 T	RST CHIP 22R 1/16W 5%	
R1750	061T0402222 T	RST CHIP 2K2 1/16W 5%	
R1749	061T0402222 T	RST CHIP 2K2 1/16W 5%	
R1748	061T0402222 T	RST CHIP 2K2 1/16W 5%	
R1747	061T0402222 T	RST CHIP 2K2 1/16W 5%	
R1547	061T0402222 T	RST CHIP 2K2 1/16W 5%	
R1546	061T0402222 T	RST CHIP 2K2 1/16W 5%	
R1420	061T0402222 T	RST CHIP 2K2 1/16W 5%	
R1419	061T0402222 T	RST CHIP 2K2 1/16W 5%	
R7513	061T0402272 Y	RST CHIPR 2.7KOHM +-5% 1/16W YAGEO	
R1403	061T0402272 Y	RST CHIPR 2.7KOHM +-5% 1/16W YAGEO	
R1401	061T0402272 Y	RST CHIPR 2.7KOHM +-5% 1/16W YAGEO	
R1220	061T0402393 T	RST CHIP 39K 1/16W 5%	
R4284	061T04024300FY	RST CHIP 430R 1/16W 1%	
R1106	061T0402470 T	RST CHIP 47R 1/16W 5%	
R1204	061T0402470 T	RST CHIP 47R 1/16W 5%	
R1205	061T0402470 T	RST CHIP 47R 1/16W 5%	
R4248	061T0402470 T	RST CHIP 47R 1/16W 5%	
R4254	061T0402470 T	RST CHIP 47R 1/16W 5%	
R4258	061T0402470 T	RST CHIP 47R 1/16W 5%	
R4263	061T0402470 T	RST CHIP 47R 1/16W 5%	
R4264	061T0402470 T	RST CHIP 47R 1/16W 5%	
R4265	061T0402470 T	RST CHIP 47R 1/16W 5%	
R4266	061T0402470 T	RST CHIP 47R 1/16W 5%	

英华家电维修资料软件专用 购买QQ:505966338

R4267	061T0402470 T	RST CHIP 47R 1/16W 5%	
R4268	061T0402470 T	RST CHIP 47R 1/16W 5%	
R4274	061T0402470 T	RST CHIP 47R 1/16W 5%	
R4277	061T0402470 T	RST CHIP 47R 1/16W 5%	
R4282	061T0402470 T	RST CHIP 47R 1/16W 5%	
R4301	061T0402470 T	RST CHIP 47R 1/16W 5%	
R4304	061T0402470 T	RST CHIP 47R 1/16W 5%	
R4306	061T0402470 T	RST CHIP 47R 1/16W 5%	
R4309	061T0402470 T	RST CHIP 47R 1/16W 5%	
R7214	061T0402470 T	RST CHIP 47R 1/16W 5%	
R7319	061T0402470 T	RST CHIP 47R 1/16W 5%	
R1206	061T0402470 T	RST CHIP 47R 1/16W 5%	
R1211	061T0402470 T	RST CHIP 47R 1/16W 5%	
R1212	061T0402470 T	RST CHIP 47R 1/16W 5%	
R1213	061T0402470 T	RST CHIP 47R 1/16W 5%	
R1215	061T0402470 T	RST CHIP 47R 1/16W 5%	
R1244	061T0402470 T	RST CHIP 47R 1/16W 5%	
R1245	061T0402470 T	RST CHIP 47R 1/16W 5%	
R1250	061T0402470 T	RST CHIP 47R 1/16W 5%	
R1426	061T0402470 T	RST CHIP 47R 1/16W 5%	
R1427	061T0402470 T	RST CHIP 47R 1/16W 5%	
R1428	061T0402470 T	RST CHIP 47R 1/16W 5%	
R4239	061T0402470 T	RST CHIP 47R 1/16W 5%	
R4240	061T0402470 T	RST CHIP 47R 1/16W 5%	
R4241	061T0402470 T	RST CHIP 47R 1/16W 5%	
R4242	061T0402470 T	RST CHIP 47R 1/16W 5%	
R4243	061T0402470 T	RST CHIP 47R 1/16W 5%	
R4245	061T0402470 T	RST CHIP 47R 1/16W 5%	
R4246	061T0402470 T	RST CHIP 47R 1/16W 5%	
R4283	061T04024700FT	RST CHIP 470R 1/16W 1%	
R4283	061T04024700FY	RST CHIP 470R 1/16W 1%	
R7217	061T0402472 T	RST CHIP 4K7 1/16W 5%	
R4259	061T0402472 T	RST CHIP 4K7 1/16W 5%	
R4244	061T0402472 T	RST CHIP 4K7 1/16W 5%	
R1626	061T0402472 T	RST CHIP 4K7 1/16W 5%	
R1625	061T0402472 T	RST CHIP 4K7 1/16W 5%	
R1542	061T0402472 T	RST CHIP 4K7 1/16W 5%	
R1541	061T0402472 T	RST CHIP 4K7 1/16W 5%	
R1506	061T0402472 T	RST CHIP 4K7 1/16W 5%	
R1516	061T0402472 T	RST CHIP 4K7 1/16W 5%	
R1517	061T0402472 T	RST CHIP 4K7 1/16W 5%	
R1540	061T0402472 T	RST CHIP 4K7 1/16W 5%	
R1524	061T0402472 T	RST CHIP 4K7 1/16W 5%	
R1520	061T0402472 T	RST CHIP 4K7 1/16W 5%	
R6140	061T0402473 T	RST CHIP 47K 1/16W 5%	
R6145	061T0402473 T	RST CHIP 47K 1/16W 5%	
R6144	061T0402473 T	RST CHIP 47K 1/16W 5%	

英华家电维修资料软件专用 购买QQ:505966338

R6139	061T0402473 T	RST CHIP 47K 1/16W 5%	
R1531	061T0402473 T	RST CHIP 47K 1/16W 5%	
R1231	061T0402473 T	RST CHIP 47K 1/16W 5%	
R1232	061T0402473 T	RST CHIP 47K 1/16W 5%	
R7301	061T0402479 Y	RST CHIPR 4.7 OHM +-5% 1/16W YAGEO	
R7302	061T0402479 Y	RST CHIPR 4.7 OHM +-5% 1/16W YAGEO	
R7125	061T06031200FT	RST CHIP 120R 1/10W 1%	
R7140	061T06031200FT	RST CHIP 120R 1/10W 1%	
R7118	061T0805229 Y	RST CHIP 2R2 1/8W 5%	
R7129	061T0805229 Y	RST CHIP 2R2 1/8W 5%	
C1526	065G040210131J 3	CAP CHIP 0402 100P 50V NPO +/-5%	
C1529	065G040210131J 3	CAP CHIP 0402 100P 50V NPO +/-5%	
C1757	065G040210131J 3	CAP CHIP 0402 100P 50V NPO +/-5%	
C4111	065G040210131J 3	CAP CHIP 0402 100P 50V NPO +/-5%	
C4230	065G040210131J 3	CAP CHIP 0402 100P 50V NPO +/-5%	
C4233	065G040210131J 3	CAP CHIP 0402 100P 50V NPO +/-5%	
C4236	065G040210131J 3	CAP CHIP 0402 100P 50V NPO +/-5%	
C1526	065G040210131J Y	CAP CHIP 0402 100P 50V NPO +/-5%	
C1529	065G040210131J Y	CAP CHIP 0402 100P 50V NPO +/-5%	
C1757	065G040210131J Y	CAP CHIP 0402 100P 50V NPO +/-5%	
C4111	065G040210131J Y	CAP CHIP 0402 100P 50V NPO +/-5%	
C4230	065G040210131J Y	CAP CHIP 0402 100P 50V NPO +/-5%	
C4233	065G040210131J Y	CAP CHIP 0402 100P 50V NPO +/-5%	
C4236	065G040210131J Y	CAP CHIP 0402 100P 50V NPO +/-5%	
C4411	065G040210232K 3	CHIP 1000PF 50V X7R	
C4245	065G040210232K 3	CHIP 1000PF 50V X7R	
C1409	065G040210232K 3	CHIP 1000PF 50V X7R	
C1214	065G040210232K 3	CHIP 1000PF 50V X7R	
C1207	065G040210232K 3	CHIP 1000PF 50V X7R	
C1207	065G040210232K Y	CAP CHIP 0402 1N 50V X7R +/-10%	
C1214	065G040210232K Y	CAP CHIP 0402 1N 50V X7R +/-10%	
C1409	065G040210232K Y	CAP CHIP 0402 1N 50V X7R +/-10%	
C4245	065G040210232K Y	CAP CHIP 0402 1N 50V X7R +/-10%	
C4411	065G040210232K Y	CAP CHIP 0402 1N 50V X7R +/-10%	
C1104	065G040210312K Y	CAP CHIP 0402 10N 16V X7R +/-10%	
C1246	065G040210312K Y	CAP CHIP 0402 10N 16V X7R +/-10%	
C1247	065G040210312K Y	CAP CHIP 0402 10N 16V X7R +/-10%	
C4416	065G040210312K Y	CAP CHIP 0402 10N 16V X7R +/-10%	
C4417	065G040210312K Y	CAP CHIP 0402 10N 16V X7R +/-10%	
C6104	065G040210312K Y	CAP CHIP 0402 10N 16V X7R +/-10%	
C6105	065G040210312K Y	CAP CHIP 0402 10N 16V X7R +/-10%	
C6132	065G040210312K Y	CAP CHIP 0402 10N 16V X7R +/-10%	
C6133	065G040210312K Y	CAP CHIP 0402 10N 16V X7R +/-10%	
C4212	065G040210412K Y	CAP CHIP 0402 100N 16V X7R +/-10%	
C4211	065G040210412K Y	CAP CHIP 0402 100N 16V X7R +/-10%	
C4210	065G040210412K Y	CAP CHIP 0402 100N 16V X7R +/-10%	
C4209	065G040210412K Y	CAP CHIP 0402 100N 16V X7R +/-10%	

英华家电维修资料软件专用 购买QQ:505966338

C4207	065G040210412K	Y	CAP CHIP 0402 100N 16V X7R +/-10%	
C4205	065G040210412K	Y	CAP CHIP 0402 100N 16V X7R +/-10%	
C4204	065G040210412K	Y	CAP CHIP 0402 100N 16V X7R +/-10%	
C4203	065G040210412K	Y	CAP CHIP 0402 100N 16V X7R +/-10%	
C4202	065G040210412K	Y	CAP CHIP 0402 100N 16V X7R +/-10%	
C1755	065G040210412K	Y	CAP CHIP 0402 100N 16V X7R +/-10%	
C1742	065G040210412K	Y	CAP CHIP 0402 100N 16V X7R +/-10%	
C1735	065G040210412K	Y	CAP CHIP 0402 100N 16V X7R +/-10%	
C4229	065G040210412K	Y	CAP CHIP 0402 100N 16V X7R +/-10%	
C4227	065G040210412K	Y	CAP CHIP 0402 100N 16V X7R +/-10%	
C4225	065G040210412K	Y	CAP CHIP 0402 100N 16V X7R +/-10%	
C4223	065G040210412K	Y	CAP CHIP 0402 100N 16V X7R +/-10%	
C4221	065G040210412K	Y	CAP CHIP 0402 100N 16V X7R +/-10%	
C4220	065G040210412K	Y	CAP CHIP 0402 100N 16V X7R +/-10%	
C4219	065G040210412K	Y	CAP CHIP 0402 100N 16V X7R +/-10%	
C4218	065G040210412K	Y	CAP CHIP 0402 100N 16V X7R +/-10%	
C4217	065G040210412K	Y	CAP CHIP 0402 100N 16V X7R +/-10%	
C4215	065G040210412K	Y	CAP CHIP 0402 100N 16V X7R +/-10%	
C4214	065G040210412K	Y	CAP CHIP 0402 100N 16V X7R +/-10%	
C4213	065G040210412K	Y	CAP CHIP 0402 100N 16V X7R +/-10%	
C1734	065G040210412K	Y	CAP CHIP 0402 100N 16V X7R +/-10%	
C1514	065G040210412K	Y	CAP CHIP 0402 100N 16V X7R +/-10%	
C1513	065G040210412K	Y	CAP CHIP 0402 100N 16V X7R +/-10%	
C1512	065G040210412K	Y	CAP CHIP 0402 100N 16V X7R +/-10%	
C1511	065G040210412K	Y	CAP CHIP 0402 100N 16V X7R +/-10%	
C1510	065G040210412K	Y	CAP CHIP 0402 100N 16V X7R +/-10%	
C1405	065G040210412K	Y	CAP CHIP 0402 100N 16V X7R +/-10%	
C1401	065G040210412K	Y	CAP CHIP 0402 100N 16V X7R +/-10%	
C1240	065G040210412K	Y	CAP CHIP 0402 100N 16V X7R +/-10%	
C1239	065G040210412K	Y	CAP CHIP 0402 100N 16V X7R +/-10%	
C1227	065G040210412K	Y	CAP CHIP 0402 100N 16V X7R +/-10%	
C1113	065G040210412K	Y	CAP CHIP 0402 100N 16V X7R +/-10%	
C1112	065G040210412K	Y	CAP CHIP 0402 100N 16V X7R +/-10%	
C1528	065G040210412K	Y	CAP CHIP 0402 100N 16V X7R +/-10%	
C1527	065G040210412K	Y	CAP CHIP 0402 100N 16V X7R +/-10%	
C1525	065G040210412K	Y	CAP CHIP 0402 100N 16V X7R +/-10%	
C1523	065G040210412K	Y	CAP CHIP 0402 100N 16V X7R +/-10%	
C1522	065G040210412K	Y	CAP CHIP 0402 100N 16V X7R +/-10%	
C1521	065G040210412K	Y	CAP CHIP 0402 100N 16V X7R +/-10%	
C1520	065G040210412K	Y	CAP CHIP 0402 100N 16V X7R +/-10%	
C1519	065G040210412K	Y	CAP CHIP 0402 100N 16V X7R +/-10%	
C1518	065G040210412K	Y	CAP CHIP 0402 100N 16V X7R +/-10%	
C1517	065G040210412K	Y	CAP CHIP 0402 100N 16V X7R +/-10%	
C1516	065G040210412K	Y	CAP CHIP 0402 100N 16V X7R +/-10%	
C1515	065G040210412K	Y	CAP CHIP 0402 100N 16V X7R +/-10%	
C7106	065G040210412K	Y	CAP CHIP 0402 100N 16V X7R +/-10%	
C6142	065G040210412K	Y	CAP CHIP 0402 100N 16V X7R +/-10%	

英华家电维修资料软件专用 购买QQ:505966338

C6141	065G040210412K	Y	CAP CHIP 0402 100N 16V X7R +/-10%	
C6115	065G040210412K	Y	CAP CHIP 0402 100N 16V X7R +/-10%	
C6114	065G040210412K	Y	CAP CHIP 0402 100N 16V X7R +/-10%	
C4414	065G040210412K	Y	CAP CHIP 0402 100N 16V X7R +/-10%	
C4413	065G040210412K	Y	CAP CHIP 0402 100N 16V X7R +/-10%	
C4412	065G040210412K	Y	CAP CHIP 0402 100N 16V X7R +/-10%	
C4410	065G040210412K	Y	CAP CHIP 0402 100N 16V X7R +/-10%	
C4409	065G040210412K	Y	CAP CHIP 0402 100N 16V X7R +/-10%	
C4408	065G040210412K	Y	CAP CHIP 0402 100N 16V X7R +/-10%	
C4407	065G040210412K	Y	CAP CHIP 0402 100N 16V X7R +/-10%	
C7113	065G040210412K	Y	CAP CHIP 0402 100N 16V X7R +/-10%	
C7306	065G040210412K	Y	CAP CHIP 0402 100N 16V X7R +/-10%	
C7302	065G040210412K	Y	CAP CHIP 0402 100N 16V X7R +/-10%	
C7301	065G040210412K	Y	CAP CHIP 0402 100N 16V X7R +/-10%	
C7164	065G040210412K	Y	CAP CHIP 0402 100N 16V X7R +/-10%	
C7163	065G040210412K	Y	CAP CHIP 0402 100N 16V X7R +/-10%	
C7160	065G040210412K	Y	CAP CHIP 0402 100N 16V X7R +/-10%	
C7159	065G040210412K	Y	CAP CHIP 0402 100N 16V X7R +/-10%	
C7157	065G040210412K	Y	CAP CHIP 0402 100N 16V X7R +/-10%	
C7133	065G040210412K	Y	CAP CHIP 0402 100N 16V X7R +/-10%	
C7131	065G040210412K	Y	CAP CHIP 0402 100N 16V X7R +/-10%	
C7118	065G040210412K	Y	CAP CHIP 0402 100N 16V X7R +/-10%	
C7114	065G040210412K	Y	CAP CHIP 0402 100N 16V X7R +/-10%	
C4251	065G040210412K	Y	CAP CHIP 0402 100N 16V X7R +/-10%	
C4250	065G040210412K	Y	CAP CHIP 0402 100N 16V X7R +/-10%	
C4246	065G040210412K	Y	CAP CHIP 0402 100N 16V X7R +/-10%	
C4244	065G040210412K	Y	CAP CHIP 0402 100N 16V X7R +/-10%	
C4243	065G040210412K	Y	CAP CHIP 0402 100N 16V X7R +/-10%	
C4242	065G040210412K	Y	CAP CHIP 0402 100N 16V X7R +/-10%	
C4241	065G040210412K	Y	CAP CHIP 0402 100N 16V X7R +/-10%	
C4240	065G040210412K	Y	CAP CHIP 0402 100N 16V X7R +/-10%	
C4239	065G040210412K	Y	CAP CHIP 0402 100N 16V X7R +/-10%	
C4238	065G040210412K	Y	CAP CHIP 0402 100N 16V X7R +/-10%	
C4235	065G040210412K	Y	CAP CHIP 0402 100N 16V X7R +/-10%	
C4232	065G040210412K	Y	CAP CHIP 0402 100N 16V X7R +/-10%	
C4252	065G040210412K	Y	CAP CHIP 0402 100N 16V X7R +/-10%	
C4406	065G040210412K	Y	CAP CHIP 0402 100N 16V X7R +/-10%	
C4405	065G040210412K	Y	CAP CHIP 0402 100N 16V X7R +/-10%	
C4404	065G040210412K	Y	CAP CHIP 0402 100N 16V X7R +/-10%	
C4403	065G040210412K	Y	CAP CHIP 0402 100N 16V X7R +/-10%	
C4402	065G040210412K	Y	CAP CHIP 0402 100N 16V X7R +/-10%	
C4271	065G040210412K	Y	CAP CHIP 0402 100N 16V X7R +/-10%	
C4254	065G040210412K	Y	CAP CHIP 0402 100N 16V X7R +/-10%	
C4255	065G040210412K	Y	CAP CHIP 0402 100N 16V X7R +/-10%	
C4256	065G040210412K	Y	CAP CHIP 0402 100N 16V X7R +/-10%	
C4258	065G040210412K	Y	CAP CHIP 0402 100N 16V X7R +/-10%	
C4259	065G040210412K	Y	CAP CHIP 0402 100N 16V X7R +/-10%	

英华家电维修资料软件专用 购买QQ:505966338

C4260	065G040210412K	Y	CAP CHIP 0402 100N 16V X7R +/-10%	
C1111	065G040222031J	3	CAP CHIP 0402 22P 50V NPO +/-5%	
C1537	065G040222031J	3	CAP CHIP 0402 22P 50V NPO +/-5%	
C1707	065G040222031J	3	CAP CHIP 0402 22P 50V NPO +/-5%	
C1710	065G040222031J	3	CAP CHIP 0402 22P 50V NPO +/-5%	
C1713	065G040222031J	3	CAP CHIP 0402 22P 50V NPO +/-5%	
C1716	065G040222031J	3	CAP CHIP 0402 22P 50V NPO +/-5%	
C4107	065G040222031J	3	CAP CHIP 0402 22P 50V NPO +/-5%	
C1766	065G040222031J	3	CAP CHIP 0402 22P 50V NPO +/-5%	
C1765	065G040222031J	3	CAP CHIP 0402 22P 50V NPO +/-5%	
C1738	065G040222031J	3	CAP CHIP 0402 22P 50V NPO +/-5%	
C1737	065G040222031J	3	CAP CHIP 0402 22P 50V NPO +/-5%	
C1736	065G040222031J	3	CAP CHIP 0402 22P 50V NPO +/-5%	
C1730	065G040222031J	3	CAP CHIP 0402 22P 50V NPO +/-5%	
C1722	065G040222031J	3	CAP CHIP 0402 22P 50V NPO +/-5%	
C1719	065G040222031J	3	CAP CHIP 0402 22P 50V NPO +/-5%	
C4107	065G040222031J	Y	CAP CHIP 0402 22P 50V NPO +/-5%	
C1766	065G040222031J	Y	CAP CHIP 0402 22P 50V NPO +/-5%	
C1765	065G040222031J	Y	CAP CHIP 0402 22P 50V NPO +/-5%	
C1738	065G040222031J	Y	CAP CHIP 0402 22P 50V NPO +/-5%	
C1737	065G040222031J	Y	CAP CHIP 0402 22P 50V NPO +/-5%	
C1736	065G040222031J	Y	CAP CHIP 0402 22P 50V NPO +/-5%	
C1730	065G040222031J	Y	CAP CHIP 0402 22P 50V NPO +/-5%	
C1722	065G040222031J	Y	CAP CHIP 0402 22P 50V NPO +/-5%	
C1719	065G040222031J	Y	CAP CHIP 0402 22P 50V NPO +/-5%	
C1716	065G040222031J	Y	CAP CHIP 0402 22P 50V NPO +/-5%	
C1713	065G040222031J	Y	CAP CHIP 0402 22P 50V NPO +/-5%	
C1710	065G040222031J	Y	CAP CHIP 0402 22P 50V NPO +/-5%	
C1707	065G040222031J	Y	CAP CHIP 0402 22P 50V NPO +/-5%	
C1537	065G040222031J	Y	CAP CHIP 0402 22P 50V NPO +/-5%	
C1111	065G040222031J	Y	CAP CHIP 0402 22P 50V NPO +/-5%	
C6151	065G040222132K	Y	CAP CHIP 0402 220PF 50V X7R +/-10%	
C1231	065G040222232K	3	CAP CHIP 0402 2N2 50V X7R +/-10%	
C1232	065G040222232K	3	CAP CHIP 0402 2N2 50V X7R +/-10%	
C1232	065G040222232K	Y	CAP CHIP 0402 2N2 50V X7R +/-10%	
C1231	065G040222232K	Y	CAP CHIP 0402 2N2 50V X7R +/-10%	
C1242	065G040233031J	Y	CAP CHIP 0402 33P 50V NPO +/-5%	
C1243	065G040233031J	Y	CAP CHIP 0402 33P 50V NPO +/-5%	
C6112	065G040233031J	Y	CAP CHIP 0402 33P 50V NPO +/-5%	
C6113	065G040233031J	Y	CAP CHIP 0402 33P 50V NPO +/-5%	
C6144	065G040233031J	Y	CAP CHIP 0402 33P 50V NPO +/-5%	
C6145	065G040233031J	Y	CAP CHIP 0402 33P 50V NPO +/-5%	
C7304	065G040233031J	Y	CAP CHIP 0402 33P 50V NPO +/-5%	
C6138	065G040233132K	3	CAP CHIP 0402 330P 50V X7R 10%	
C6137	065G040233132K	3	CAP CHIP 0402 330P 50V X7R 10%	
C6109	065G040233132K	3	CAP CHIP 0402 330P 50V X7R 10%	
C6108	065G040233132K	3	CAP CHIP 0402 330P 50V X7R 10%	

英华家电维修资料软件专用 购买QQ:505966338

C1236	065G040233132K	3	CAP CHIP 0402 330P 50V X7R 10%	
C1235	065G040233132K	3	CAP CHIP 0402 330P 50V X7R 10%	
C6138	065G040233132K	Y	CAP CHIP 0402 330P 50V X7R +/-10%	
C6137	065G040233132K	Y	CAP CHIP 0402 330P 50V X7R +/-10%	
C6109	065G040233132K	Y	CAP CHIP 0402 330P 50V X7R +/-10%	
C6108	065G040233132K	Y	CAP CHIP 0402 330P 50V X7R +/-10%	
C1236	065G040233132K	Y	CAP CHIP 0402 330P 50V X7R +/-10%	
C1235	065G040233132K	Y	CAP CHIP 0402 330P 50V X7R +/-10%	
C1127	065G040247031J	3	CAP CHIP 0402 47P 50V NPO +/-5%	
C1128	065G040247031J	3	CAP CHIP 0402 47P 50V NPO +/-5%	
C1230	065G040247031J	3	CAP CHIP 0402 47P 50V NPO +/-5%	
C1255	065G040247031J	3	CAP CHIP 0402 47P 50V NPO +/-5%	
C1127	065G040247031J	Y	CAP CHIP 0402 47PF 50V NPO +/-5%	
C1128	065G040247031J	Y	CAP CHIP 0402 47PF 50V NPO +/-5%	
C1230	065G040247031J	Y	CAP CHIP 0402 47PF 50V NPO +/-5%	
C1255	065G040247031J	Y	CAP CHIP 0402 47PF 50V NPO +/-5%	
C1109	065G040247312K	Y	CAP CHIP 0402 47NF 16V X7R	
C1114	065G040247312K	Y	CAP CHIP 0402 47NF 16V X7R	
C1204	065G040247312K	Y	CAP CHIP 0402 47NF 16V X7R	
C1205	065G040247312K	Y	CAP CHIP 0402 47NF 16V X7R	
C1206	065G040247312K	Y	CAP CHIP 0402 47NF 16V X7R	
C1211	065G040247312K	Y	CAP CHIP 0402 47NF 16V X7R	
C1212	065G040247312K	Y	CAP CHIP 0402 47NF 16V X7R	
C1213	065G040247312K	Y	CAP CHIP 0402 47NF 16V X7R	
C1223	065G040247312K	Y	CAP CHIP 0402 47NF 16V X7R	
C1252	065G040247312K	Y	CAP CHIP 0402 47NF 16V X7R	
C1253	065G040247312K	Y	CAP CHIP 0402 47NF 16V X7R	
C1254	065G040247312K	Y	CAP CHIP 0402 47NF 16V X7R	
C1256	065G040247312K	Y	CAP CHIP 0402 47NF 16V X7R	
C1406	065G040247312K	Y	CAP CHIP 0402 47NF 16V X7R	
C1407	065G040247312K	Y	CAP CHIP 0402 47NF 16V X7R	
C1408	065G040247312K	Y	CAP CHIP 0402 47NF 16V X7R	
C1611	065G060310422K	3	CAP CHIP 0603 100N 25V X7R +/-10%	
C1612	065G060310422K	3	CAP CHIP 0603 100N 25V X7R +/-10%	
C1613	065G060310422K	3	CAP CHIP 0603 100N 25V X7R +/-10%	
C1616	065G060310422K	3	CAP CHIP 0603 100N 25V X7R +/-10%	
C1622	065G060310422K	3	CAP CHIP 0603 100N 25V X7R +/-10%	
C1623	065G060310422K	3	CAP CHIP 0603 100N 25V X7R +/-10%	
C1624	065G060310422K	3	CAP CHIP 0603 100N 25V X7R +/-10%	
C1611	065G060310422K	Y	CAP CHIP 0603 100N 25V X7R +/-10%	
C1612	065G060310422K	Y	CAP CHIP 0603 100N 25V X7R +/-10%	
C1613	065G060310422K	Y	CAP CHIP 0603 100N 25V X7R +/-10%	
C1616	065G060310422K	Y	CAP CHIP 0603 100N 25V X7R +/-10%	
C1622	065G060310422K	Y	CAP CHIP 0603 100N 25V X7R +/-10%	
C1623	065G060310422K	Y	CAP CHIP 0603 100N 25V X7R +/-10%	
C1624	065G060310422K	Y	CAP CHIP 0603 100N 25V X7R +/-10%	
C7111	065G060310432K	3	CAP CHIP 0603 0.1UF K 50V X7R	

英华家电维修资料软件专用 购买QQ:505966338

C7111	065G060310432K	Y	CAP CHIP 0603 0.1UF K 50V X7R	
C6102	065G060310437Z	3	CAP CHIP 0603 0.1UF Z 50V Y5V	
C6148	065G060310437Z	3	CAP CHIP 0603 0.1UF Z 50V Y5V	
C7204	065G060310437Z	3	CAP CHIP 0603 0.1UF Z 50V Y5V	
C7206	065G060310437Z	3	CAP CHIP 0603 0.1UF Z 50V Y5V	
C7209	065G060310437Z	3	CAP CHIP 0603 0.1UF Z 50V Y5V	
C7212	065G060310437Z	3	CAP CHIP 0603 0.1UF Z 50V Y5V	
C7215	065G060310437Z	3	CAP CHIP 0603 0.1UF Z 50V Y5V	
C7216	065G060310437Z	3	CAP CHIP 0603 0.1UF Z 50V Y5V	
C7215	065G060310437Z	Y	CAP CHIP 0603 100N 50V Y5V -20%+80%	
C7212	065G060310437Z	Y	CAP CHIP 0603 100N 50V Y5V -20%+80%	
C7209	065G060310437Z	Y	CAP CHIP 0603 100N 50V Y5V -20%+80%	
C7206	065G060310437Z	Y	CAP CHIP 0603 100N 50V Y5V -20%+80%	
C7204	065G060310437Z	Y	CAP CHIP 0603 100N 50V Y5V -20%+80%	
C6148	065G060310437Z	Y	CAP CHIP 0603 100N 50V Y5V -20%+80%	
C6102	065G060310437Z	Y	CAP CHIP 0603 100N 50V Y5V -20%+80%	
C7216	065G060310437Z	Y	CAP CHIP 0603 100N 50V Y5V -20%+80%	
C6118	065G060310512K	3	MLCC 0603 CAP 1UF K 16V X7R	
C6117	065G060310512K	3	MLCC 0603 CAP 1UF K 16V X7R	
C6117	065G060310512K	T	CAP CHIP 0603 1UF K 16V X7R	
C6118	065G060310512K	T	CAP CHIP 0603 1UF K 16V X7R	
C4262	065G0603105A7Z	3	CAP CHIP 0603 1U 10V Y5V -20%+80%	
C1762	065G0603105A7Z	3	CAP CHIP 0603 1U 10V Y5V -20%+80%	
C1759	065G0603105A7Z	3	CAP CHIP 0603 1U 10V Y5V -20%+80%	
C1754	065G0603105A7Z	3	CAP CHIP 0603 1U 10V Y5V -20%+80%	
C1753	065G0603105A7Z	3	CAP CHIP 0603 1U 10V Y5V -20%+80%	
C1750	065G0603105A7Z	3	CAP CHIP 0603 1U 10V Y5V -20%+80%	
C1749	065G0603105A7Z	3	CAP CHIP 0603 1U 10V Y5V -20%+80%	
C1748	065G0603105A7Z	3	CAP CHIP 0603 1U 10V Y5V -20%+80%	
C1747	065G0603105A7Z	3	CAP CHIP 0603 1U 10V Y5V -20%+80%	
C1724	065G0603105A7Z	3	CAP CHIP 0603 1U 10V Y5V -20%+80%	
C1721	065G0603105A7Z	3	CAP CHIP 0603 1U 10V Y5V -20%+80%	
C1718	065G0603105A7Z	3	CAP CHIP 0603 1U 10V Y5V -20%+80%	
C1715	065G0603105A7Z	3	CAP CHIP 0603 1U 10V Y5V -20%+80%	
C1234	065G0603105A7Z	3	CAP CHIP 0603 1U 10V Y5V -20%+80%	
C1233	065G0603105A7Z	3	CAP CHIP 0603 1U 10V Y5V -20%+80%	
C1233	065G0603105A7Z	Y	CAP CHIP 0603 1U 10V Y5V -20%+80%	
C1234	065G0603105A7Z	Y	CAP CHIP 0603 1U 10V Y5V -20%+80%	
C1715	065G0603105A7Z	Y	CAP CHIP 0603 1U 10V Y5V -20%+80%	
C1718	065G0603105A7Z	Y	CAP CHIP 0603 1U 10V Y5V -20%+80%	
C1721	065G0603105A7Z	Y	CAP CHIP 0603 1U 10V Y5V -20%+80%	
C4262	065G0603105A7Z	Y	CAP CHIP 0603 1U 10V Y5V -20%+80%	
C1762	065G0603105A7Z	Y	CAP CHIP 0603 1U 10V Y5V -20%+80%	
C1759	065G0603105A7Z	Y	CAP CHIP 0603 1U 10V Y5V -20%+80%	
C1754	065G0603105A7Z	Y	CAP CHIP 0603 1U 10V Y5V -20%+80%	
C1753	065G0603105A7Z	Y	CAP CHIP 0603 1U 10V Y5V -20%+80%	
C1750	065G0603105A7Z	Y	CAP CHIP 0603 1U 10V Y5V -20%+80%	

英华家电维修资料软件专用 购买QQ:505966338

C1749	065G0603105A7Z	Y	CAP CHIP 0603 1U 10V Y5V -20%+80%	
C1748	065G0603105A7Z	Y	CAP CHIP 0603 1U 10V Y5V -20%+80%	
C1747	065G0603105A7Z	Y	CAP CHIP 0603 1U 10V Y5V -20%+80%	
C1724	065G0603105A7Z	Y	CAP CHIP 0603 1U 10V Y5V -20%+80%	
C1629	065G060312031J	Y	CAP CHIP 0603 12P 50V NPO +/-5%	
C1628	065G060312031J	Y	CAP CHIP 0603 12P 50V NPO +/-5%	
C1627	065G060312031J	Y	CAP CHIP 0603 12P 50V NPO +/-5%	
C1626	065G060312031J	Y	CAP CHIP 0603 12P 50V NPO +/-5%	
C1618	065G060312031J	Y	CAP CHIP 0603 12P 50V NPO +/-5%	
C1617	065G060312031J	Y	CAP CHIP 0603 12P 50V NPO +/-5%	
C7122	065G060322131J	3	CAP CHIP 0603 220PF J 50V NPO	
C7138	065G060322131J	3	CAP CHIP 0603 220PF J 50V NPO	
C7138	065G060322131J	Y	CAP CHIP 0603 220P 50V NPO +/-5%	
C7122	065G060322131J	Y	CAP CHIP 0603 220P 50V NPO +/-5%	
C7123	065G060322232K	3	CAP CHIP 0603 2200PF K 50V X7R	
C7139	065G060322232K	3	CAP CHIP 0603 2200PF K 50V X7R	
C7123	065G060322232K	Y	CAP CHIP 0603 2N2 50V X7R +/-10%	
C7139	065G060322232K	Y	CAP CHIP 0603 2N2 50V X7R +/-10%	
C7137	065G060322312K	3	CAP CHIP 0603 22N 16V X7R +/-10%	
C7137	065G060322312K	Y	CAP CHIP 0603 22N 16V X7R +/-10%	
C7121	065G060322412K	3	CAP CHIP 0603 220N 16V X7R +/-10%	
C7141	065G060322412K	3	CAP CHIP 0603 220N 16V X7R +/-10%	
C7141	065G060322412K	Y	CAP CHIP 0603 220N 16V X7R 10%	
C7121	065G060322412K	Y	CAP CHIP 0603 220N 16V X7R 10%	
C6125	065G060322422K	3	CAP CHIP 0603 220N 25V X7R +/-10%	
C6126	065G060322422K	3	CAP CHIP 0603 220N 25V X7R +/-10%	
C6125	065G060322422K	Y	CAP CHIP 0603 0.22UF K 25V X7R	
C6126	065G060322422K	Y	CAP CHIP 0603 0.22UF K 25V X7R	
C1244	065G060322517Z	Y	CAP CHIP 0603 2.2UF Z 16V Y5V	
C1245	065G060322517Z	Y	CAP CHIP 0603 2.2UF Z 16V Y5V	
C1709	065G060322517Z	Y	CAP CHIP 0603 2.2UF Z 16V Y5V	
C1712	065G060322517Z	Y	CAP CHIP 0603 2.2UF Z 16V Y5V	
C1763	065G060322517Z	Y	CAP CHIP 0603 2.2UF Z 16V Y5V	
C1764	065G060322517Z	Y	CAP CHIP 0603 2.2UF Z 16V Y5V	
C4248	065G060327031J	3	CAP CHIP 0603 27PF 50V NPO +/-5%	
C4249	065G060327031J	3	CAP CHIP 0603 27PF 50V NPO +/-5%	
C4248	065G060327031J	Y	CAP CHIP 0603 27P 50V NPO +/-5%	
C4249	065G060327031J	Y	CAP CHIP 0603 27P 50V NPO +/-5%	
C7120	065G060333312K	3	CAP CHIP 0603 33N 16V X7R +/-10%	
C7120	065G060333312K	Y	CAP CHIP 0603 33N 16V X7R +/-10%	
C1226	065G060368232K	Y	CAP CHIP 0603 6N8 50V X7R +/-10%	
C1225	065G060368232K	Y	CAP CHIP 0603 6N8 50V X7R +/-10%	
C6128	065G080510432K	Y	CAP CHIP 0805 100N 50V X7R +/-10%	
C6124	065G080510432K	Y	CAP CHIP 0805 100N 50V X7R +/-10%	
C6123	065G080510432K	Y	CAP CHIP 0805 100N 50V X7R +/-10%	
C6140	065G080510522K	3	CAP CHIP 0805 1U 25V X7R +/-10%	
C6139	065G080510522K	3	CAP CHIP 0805 1U 25V X7R +/-10%	

英华家电维修资料软件专用 购买QQ:505966338

C6135	065G080510522K	3	CAP CHIP 0805 1U 25V X7R +/-10%	
C6134	065G080510522K	3	CAP CHIP 0805 1U 25V X7R +/-10%	
C6120	065G080510522K	3	CAP CHIP 0805 1U 25V X7R +/-10%	
C6119	065G080510522K	3	CAP CHIP 0805 1U 25V X7R +/-10%	
C6111	065G080510522K	3	CAP CHIP 0805 1U 25V X7R +/-10%	
C6110	065G080510522K	3	CAP CHIP 0805 1U 25V X7R +/-10%	
C1238	065G080510522K	3	CAP CHIP 0805 1U 25V X7R +/-10%	
C1237	065G080510522K	3	CAP CHIP 0805 1U 25V X7R +/-10%	
C1237	065G080510522K	Y	CAP CHIP 0805 1UF K 25V X7R	
C1238	065G080510522K	Y	CAP CHIP 0805 1UF K 25V X7R	
C6110	065G080510522K	Y	CAP CHIP 0805 1UF K 25V X7R	
C6111	065G080510522K	Y	CAP CHIP 0805 1UF K 25V X7R	
C6119	065G080510522K	Y	CAP CHIP 0805 1UF K 25V X7R	
C6120	065G080510522K	Y	CAP CHIP 0805 1UF K 25V X7R	
C6134	065G080510522K	Y	CAP CHIP 0805 1UF K 25V X7R	
C6135	065G080510522K	Y	CAP CHIP 0805 1UF K 25V X7R	
C6139	065G080510522K	Y	CAP CHIP 0805 1UF K 25V X7R	
C6140	065G080510522K	Y	CAP CHIP 0805 1UF K 25V X7R	
C7201	065G0805106A5K	3	CHIP 10UF 10V X5R 10%	
C7119	065G0805106A5K	3	CHIP 10UF 10V X5R 10%	
C4261	065G0805106A5K	3	CHIP 10UF 10V X5R 10%	
C4237	065G0805106A5K	3	CHIP 10UF 10V X5R 10%	
C4228	065G0805106A5K	3	CHIP 10UF 10V X5R 10%	
C1756	065G0805106A5K	3	CHIP 10UF 10V X5R 10%	
C1751	065G0805106A5K	3	CHIP 10UF 10V X5R 10%	
C1257	065G0805106A5K	3	CHIP 10UF 10V X5R 10%	
C1228	065G0805106A5K	3	CHIP 10UF 10V X5R 10%	
C1115	065G0805106A5K	3	CHIP 10UF 10V X5R 10%	
C1743	065G0805106A5K	3	CHIP 10UF 10V X5R 10%	
C1741	065G0805106A5K	3	CHIP 10UF 10V X5R 10%	
C1509	065G0805106A5K	3	CHIP 10UF 10V X5R 10%	
C4237	065G0805106A5K	T	CHIP 10UF 10V X5R 0805	
C4228	065G0805106A5K	T	CHIP 10UF 10V X5R 0805	
C1756	065G0805106A5K	T	CHIP 10UF 10V X5R 0805	
C4261	065G0805106A5K	T	CHIP 10UF 10V X5R 0805	
C7119	065G0805106A5K	T	CHIP 10UF 10V X5R 0805	
C7201	065G0805106A5K	T	CHIP 10UF 10V X5R 0805	
C1751	065G0805106A5K	T	CHIP 10UF 10V X5R 0805	
C1743	065G0805106A5K	T	CHIP 10UF 10V X5R 0805	
C1741	065G0805106A5K	T	CHIP 10UF 10V X5R 0805	
C1509	065G0805106A5K	T	CHIP 10UF 10V X5R 0805	
C1257	065G0805106A5K	T	CHIP 10UF 10V X5R 0805	
C1228	065G0805106A5K	T	CHIP 10UF 10V X5R 0805	
C1115	065G0805106A5K	T	CHIP 10UF 10V X5R 0805	
C1608	065G0805106A7Z	3	CAP CHIP 0805 10U 10V Y5V -20~+80%	
C1609	065G0805106A7Z	3	CAP CHIP 0805 10U 10V Y5V -20~+80%	
C1614	065G0805106A7Z	3	CAP CHIP 0805 10U 10V Y5V -20~+80%	

英华家电维修资料软件专用 购买QQ:505966338

C1615	065G0805106A7Z	3	CAP CHIP 0805 10U 10V Y5V -20~+80%	
C1625	065G0805106A7Z	3	CAP CHIP 0805 10U 10V Y5V -20~+80%	
C1630	065G0805106A7Z	3	CAP CHIP 0805 10U 10V Y5V -20~+80%	
C1630	065G0805106A7Z	Y	CAP CHIP 0805 10UF Z 10V Y5V	
C1625	065G0805106A7Z	Y	CAP CHIP 0805 10UF Z 10V Y5V	
C1615	065G0805106A7Z	Y	CAP CHIP 0805 10UF Z 10V Y5V	
C1614	065G0805106A7Z	Y	CAP CHIP 0805 10UF Z 10V Y5V	
C1609	065G0805106A7Z	Y	CAP CHIP 0805 10UF Z 10V Y5V	
C1608	065G0805106A7Z	Y	CAP CHIP 0805 10UF Z 10V Y5V	
C7110	065G080522422K	3	CAP CHIP 0805 220N 25V X7R -/+ 10%	
C7110	065G080522422K	Y	CAP CHIP 0805 220N 25V X7R -/+ 10%	
C6106	065G080522512K	3	CAP CHIP 0805 2U2 16V X7R +/-10%	
C6107	065G080522512K	3	CAP CHIP 0805 2U2 16V X7R +/-10%	
C6106	065G080522512K	Y	CAP CHIP 0805 2.2UF K 16V X7R	
C6107	065G080522512K	Y	CAP CHIP 0805 2.2UF K 16V X7R	
C7140	065G080533132K	3	CAP CHIP 0805 330P 50V X7R +/-10%	
C7124	065G080533132K	3	CAP CHIP 0805 330P 50V X7R +/-10%	
C7124	065G080533132K	Y	CAP CHIP 0805 330PF K 50V X7R	
C7140	065G080533132K	Y	CAP CHIP 0805 330PF K 50V X7R	
C6101	065G080547437Z	Y	CAP CHIP 0805 0.47UF Z 50V Y5V	
C4418	065G0805475A2K	3	CAP CHIP 4.7UF 10V X7R +/- 10%	
C4415	065G0805475A2K	3	CAP CHIP 4.7UF 10V X7R +/- 10%	
C4263	065G0805475A2K	3	CAP CHIP 4.7UF 10V X7R +/- 10%	
C4263	065G0805475A2K	T	CAP CHIP 4U7 10V X7R 10%	
C4415	065G0805475A2K	T	CAP CHIP 4U7 10V X7R 10%	
C4418	065G0805475A2K	T	CAP CHIP 4U7 10V X7R 10%	
C1708	065G080556131J	Y	CAP CHIP 0805 560P 50V NPO +/-5%	
C1711	065G080556131J	Y	CAP CHIP 0805 560P 50V NPO +/-5%	
C1714	065G080556131J	Y	CAP CHIP 0805 560P 50V NPO +/-5%	
C1717	065G080556131J	Y	CAP CHIP 0805 560P 50V NPO +/-5%	
C1776	065G080556131J	Y	CAP CHIP 0805 560P 50V NPO +/-5%	
C1775	065G080556131J	Y	CAP CHIP 0805 560P 50V NPO +/-5%	
C1774	065G080556131J	Y	CAP CHIP 0805 560P 50V NPO +/-5%	
C1761	065G080556131J	Y	CAP CHIP 0805 560P 50V NPO +/-5%	
C1746	065G080556131J	Y	CAP CHIP 0805 560P 50V NPO +/-5%	
C1739	065G080556131J	Y	CAP CHIP 0805 560P 50V NPO +/-5%	
C1723	065G080556131J	Y	CAP CHIP 0805 560P 50V NPO +/-5%	
C1720	065G080556131J	Y	CAP CHIP 0805 560P 50V NPO +/-5%	
C7158	065G120610612K	3	CHIP 10UF 16V X7R 10%	
C7125	065G120610612K	3	CHIP 10UF 16V X7R 10%	
C7117	065G120610612K	3	CHIP 10UF 16V X7R 10%	
C4401	065G120610612K	3	CHIP 10UF 16V X7R 10%	
C4234	065G120610612K	3	CHIP 10UF 16V X7R 10%	
C4231	065G120610612K	3	CHIP 10UF 16V X7R 10%	
C4226	065G120610612K	3	CHIP 10UF 16V X7R 10%	
C4224	065G120610612K	3	CHIP 10UF 16V X7R 10%	
C4222	065G120610612K	3	CHIP 10UF 16V X7R 10%	

英华家电维修资料软件专用 购买QQ:505966338

C4216	065G120610612K	3	CHIP 10UF 16V X7R 10%	
C4208	065G120610612K	3	CHIP 10UF 16V X7R 10%	
C4206	065G120610612K	3	CHIP 10UF 16V X7R 10%	
C4201	065G120610612K	3	CHIP 10UF 16V X7R 10%	
C1607	065G1206226A7Z	Y	CER 1206 22U 10V Y5V -20%+80%	
C1606	065G1206226A7Z	Y	CER 1206 22U 10V Y5V -20%+80%	
C1605	065G1206226A7Z	Y	CER 1206 22U 10V Y5V -20%+80%	
C6149	065G120647437M	Y	CER 1206 470N 50V Y5V +/-20%	
C6150	065G120647437M	Y	CER 1206 470N 50V Y5V +/-20%	
C6133	065T040210312K	3	CAP CHIP 0402 10N 16V X7R +/-10%	
C6132	065T040210312K	3	CAP CHIP 0402 10N 16V X7R +/-10%	
C6105	065T040210312K	3	CAP CHIP 0402 10N 16V X7R +/-10%	
C6104	065T040210312K	3	CAP CHIP 0402 10N 16V X7R +/-10%	
C4417	065T040210312K	3	CAP CHIP 0402 10N 16V X7R +/-10%	
C4416	065T040210312K	3	CAP CHIP 0402 10N 16V X7R +/-10%	
C1247	065T040210312K	3	CAP CHIP 0402 10N 16V X7R +/-10%	
C1246	065T040210312K	3	CAP CHIP 0402 10N 16V X7R +/-10%	
C1104	065T040210312K	3	CAP CHIP 0402 10N 16V X7R +/-10%	
C4205	065T040210412K	3	CAP CHIP 0402 100N 16V X7R +/-10%	
C4204	065T040210412K	3	CAP CHIP 0402 100N 16V X7R +/-10%	
C4203	065T040210412K	3	CAP CHIP 0402 100N 16V X7R +/-10%	
C4202	065T040210412K	3	CAP CHIP 0402 100N 16V X7R +/-10%	
C1755	065T040210412K	3	CAP CHIP 0402 100N 16V X7R +/-10%	
C1742	065T040210412K	3	CAP CHIP 0402 100N 16V X7R +/-10%	
C1735	065T040210412K	3	CAP CHIP 0402 100N 16V X7R +/-10%	
C1734	065T040210412K	3	CAP CHIP 0402 100N 16V X7R +/-10%	
C1528	065T040210412K	3	CAP CHIP 0402 100N 16V X7R +/-10%	
C1527	065T040210412K	3	CAP CHIP 0402 100N 16V X7R +/-10%	
C4207	065T040210412K	3	CAP CHIP 0402 100N 16V X7R +/-10%	
C4209	065T040210412K	3	CAP CHIP 0402 100N 16V X7R +/-10%	
C4210	065T040210412K	3	CAP CHIP 0402 100N 16V X7R +/-10%	
C4211	065T040210412K	3	CAP CHIP 0402 100N 16V X7R +/-10%	
C4212	065T040210412K	3	CAP CHIP 0402 100N 16V X7R +/-10%	
C4213	065T040210412K	3	CAP CHIP 0402 100N 16V X7R +/-10%	
C4214	065T040210412K	3	CAP CHIP 0402 100N 16V X7R +/-10%	
C4215	065T040210412K	3	CAP CHIP 0402 100N 16V X7R +/-10%	
C4217	065T040210412K	3	CAP CHIP 0402 100N 16V X7R +/-10%	
C4218	065T040210412K	3	CAP CHIP 0402 100N 16V X7R +/-10%	
C4219	065T040210412K	3	CAP CHIP 0402 100N 16V X7R +/-10%	
C6142	065T040210412K	3	CAP CHIP 0402 100N 16V X7R +/-10%	
C6141	065T040210412K	3	CAP CHIP 0402 100N 16V X7R +/-10%	
C6115	065T040210412K	3	CAP CHIP 0402 100N 16V X7R +/-10%	
C6114	065T040210412K	3	CAP CHIP 0402 100N 16V X7R +/-10%	
C4414	065T040210412K	3	CAP CHIP 0402 100N 16V X7R +/-10%	
C4413	065T040210412K	3	CAP CHIP 0402 100N 16V X7R +/-10%	
C4412	065T040210412K	3	CAP CHIP 0402 100N 16V X7R +/-10%	
C4410	065T040210412K	3	CAP CHIP 0402 100N 16V X7R +/-10%	

英华家电维修资料软件专用 购买QQ:505966338

C4409	065T040210412K	3	CAP CHIP 0402 100N 16V X7R +/-10%	
C4408	065T040210412K	3	CAP CHIP 0402 100N 16V X7R +/-10%	
C4407	065T040210412K	3	CAP CHIP 0402 100N 16V X7R +/-10%	
C4406	065T040210412K	3	CAP CHIP 0402 100N 16V X7R +/-10%	
C4405	065T040210412K	3	CAP CHIP 0402 100N 16V X7R +/-10%	
C4404	065T040210412K	3	CAP CHIP 0402 100N 16V X7R +/-10%	
C7306	065T040210412K	3	CAP CHIP 0402 100N 16V X7R +/-10%	
C7302	065T040210412K	3	CAP CHIP 0402 100N 16V X7R +/-10%	
C7301	065T040210412K	3	CAP CHIP 0402 100N 16V X7R +/-10%	
C7164	065T040210412K	3	CAP CHIP 0402 100N 16V X7R +/-10%	
C7163	065T040210412K	3	CAP CHIP 0402 100N 16V X7R +/-10%	
C7160	065T040210412K	3	CAP CHIP 0402 100N 16V X7R +/-10%	
C7159	065T040210412K	3	CAP CHIP 0402 100N 16V X7R +/-10%	
C7157	065T040210412K	3	CAP CHIP 0402 100N 16V X7R +/-10%	
C7133	065T040210412K	3	CAP CHIP 0402 100N 16V X7R +/-10%	
C7131	065T040210412K	3	CAP CHIP 0402 100N 16V X7R +/-10%	
C7118	065T040210412K	3	CAP CHIP 0402 100N 16V X7R +/-10%	
C7114	065T040210412K	3	CAP CHIP 0402 100N 16V X7R +/-10%	
C7113	065T040210412K	3	CAP CHIP 0402 100N 16V X7R +/-10%	
C7106	065T040210412K	3	CAP CHIP 0402 100N 16V X7R +/-10%	
C4243	065T040210412K	3	CAP CHIP 0402 100N 16V X7R +/-10%	
C4242	065T040210412K	3	CAP CHIP 0402 100N 16V X7R +/-10%	
C4241	065T040210412K	3	CAP CHIP 0402 100N 16V X7R +/-10%	
C4240	065T040210412K	3	CAP CHIP 0402 100N 16V X7R +/-10%	
C4239	065T040210412K	3	CAP CHIP 0402 100N 16V X7R +/-10%	
C4238	065T040210412K	3	CAP CHIP 0402 100N 16V X7R +/-10%	
C4235	065T040210412K	3	CAP CHIP 0402 100N 16V X7R +/-10%	
C4232	065T040210412K	3	CAP CHIP 0402 100N 16V X7R +/-10%	
C4229	065T040210412K	3	CAP CHIP 0402 100N 16V X7R +/-10%	
C4227	065T040210412K	3	CAP CHIP 0402 100N 16V X7R +/-10%	
C4225	065T040210412K	3	CAP CHIP 0402 100N 16V X7R +/-10%	
C4223	065T040210412K	3	CAP CHIP 0402 100N 16V X7R +/-10%	
C4221	065T040210412K	3	CAP CHIP 0402 100N 16V X7R +/-10%	
C4220	065T040210412K	3	CAP CHIP 0402 100N 16V X7R +/-10%	
C4403	065T040210412K	3	CAP CHIP 0402 100N 16V X7R +/-10%	
C4402	065T040210412K	3	CAP CHIP 0402 100N 16V X7R +/-10%	
C4271	065T040210412K	3	CAP CHIP 0402 100N 16V X7R +/-10%	
C4260	065T040210412K	3	CAP CHIP 0402 100N 16V X7R +/-10%	
C4259	065T040210412K	3	CAP CHIP 0402 100N 16V X7R +/-10%	
C4258	065T040210412K	3	CAP CHIP 0402 100N 16V X7R +/-10%	
C4256	065T040210412K	3	CAP CHIP 0402 100N 16V X7R +/-10%	
C4255	065T040210412K	3	CAP CHIP 0402 100N 16V X7R +/-10%	
C4254	065T040210412K	3	CAP CHIP 0402 100N 16V X7R +/-10%	
C4252	065T040210412K	3	CAP CHIP 0402 100N 16V X7R +/-10%	
C4251	065T040210412K	3	CAP CHIP 0402 100N 16V X7R +/-10%	
C4250	065T040210412K	3	CAP CHIP 0402 100N 16V X7R +/-10%	
C4246	065T040210412K	3	CAP CHIP 0402 100N 16V X7R +/-10%	

英华家电维修资料软件专用 购买QQ:505966338

C4244	065T040210412K	3	CAP CHIP 0402 100N 16V X7R +/-10%	
C1525	065T040210412K	3	CAP CHIP 0402 100N 16V X7R +/-10%	
C1112	065T040210412K	3	CAP CHIP 0402 100N 16V X7R +/-10%	
C1113	065T040210412K	3	CAP CHIP 0402 100N 16V X7R +/-10%	
C1227	065T040210412K	3	CAP CHIP 0402 100N 16V X7R +/-10%	
C1239	065T040210412K	3	CAP CHIP 0402 100N 16V X7R +/-10%	
C1240	065T040210412K	3	CAP CHIP 0402 100N 16V X7R +/-10%	
C1401	065T040210412K	3	CAP CHIP 0402 100N 16V X7R +/-10%	
C1405	065T040210412K	3	CAP CHIP 0402 100N 16V X7R +/-10%	
C1510	065T040210412K	3	CAP CHIP 0402 100N 16V X7R +/-10%	
C1511	065T040210412K	3	CAP CHIP 0402 100N 16V X7R +/-10%	
C1512	065T040210412K	3	CAP CHIP 0402 100N 16V X7R +/-10%	
C1513	065T040210412K	3	CAP CHIP 0402 100N 16V X7R +/-10%	
C1523	065T040210412K	3	CAP CHIP 0402 100N 16V X7R +/-10%	
C1522	065T040210412K	3	CAP CHIP 0402 100N 16V X7R +/-10%	
C1521	065T040210412K	3	CAP CHIP 0402 100N 16V X7R +/-10%	
C1520	065T040210412K	3	CAP CHIP 0402 100N 16V X7R +/-10%	
C1519	065T040210412K	3	CAP CHIP 0402 100N 16V X7R +/-10%	
C1518	065T040210412K	3	CAP CHIP 0402 100N 16V X7R +/-10%	
C1517	065T040210412K	3	CAP CHIP 0402 100N 16V X7R +/-10%	
C1516	065T040210412K	3	CAP CHIP 0402 100N 16V X7R +/-10%	
C1515	065T040210412K	3	CAP CHIP 0402 100N 16V X7R +/-10%	
C1514	065T040210412K	3	CAP CHIP 0402 100N 16V X7R +/-10%	
C7304	065T040233031J	3	CAP CHIP 0402 33P 50V NPO +/-5%	
C6145	065T040233031J	3	CAP CHIP 0402 33P 50V NPO +/-5%	
C6144	065T040233031J	3	CAP CHIP 0402 33P 50V NPO +/-5%	
C6113	065T040233031J	3	CAP CHIP 0402 33P 50V NPO +/-5%	
C6112	065T040233031J	3	CAP CHIP 0402 33P 50V NPO +/-5%	
C1243	065T040233031J	3	CAP CHIP 0402 33P 50V NPO +/-5%	
C1242	065T040233031J	3	CAP CHIP 0402 33P 50V NPO +/-5%	
C1109	065T040247312K	3	CHIP CAP 47N 16V X7R 10%	
C1114	065T040247312K	3	CHIP CAP 47N 16V X7R 10%	
C1204	065T040247312K	3	CHIP CAP 47N 16V X7R 10%	
C1205	065T040247312K	3	CHIP CAP 47N 16V X7R 10%	
C1206	065T040247312K	3	CHIP CAP 47N 16V X7R 10%	
C1211	065T040247312K	3	CHIP CAP 47N 16V X7R 10%	
C1212	065T040247312K	3	CHIP CAP 47N 16V X7R 10%	
C1213	065T040247312K	3	CHIP CAP 47N 16V X7R 10%	
C1223	065T040247312K	3	CHIP CAP 47N 16V X7R 10%	
C1252	065T040247312K	3	CHIP CAP 47N 16V X7R 10%	
C1253	065T040247312K	3	CHIP CAP 47N 16V X7R 10%	
C1254	065T040247312K	3	CHIP CAP 47N 16V X7R 10%	
C1256	065T040247312K	3	CHIP CAP 47N 16V X7R 10%	
C1406	065T040247312K	3	CHIP CAP 47N 16V X7R 10%	
C1407	065T040247312K	3	CHIP CAP 47N 16V X7R 10%	
C1408	065T040247312K	3	CHIP CAP 47N 16V X7R 10%	
C1629	065T060312031J	3	CAP CHIP 0603 12PF J 50V NPO	

英华家电维修资料软件专用 购买QQ:505966338

C1628	065T060312031J 3	CAP CHIP 0603 12PF J 50V NPO	
C1627	065T060312031J 3	CAP CHIP 0603 12PF J 50V NPO	
C1626	065T060312031J 3	CAP CHIP 0603 12PF J 50V NPO	
C1618	065T060312031J 3	CAP CHIP 0603 12PF J 50V NPO	
C1617	065T060312031J 3	CAP CHIP 0603 12PF J 50V NPO	
C1764	065T060322517Z 3	CAP CHIP 0603 2U2 16V Y5V -20%+80%	
C1763	065T060322517Z 3	CAP CHIP 0603 2U2 16V Y5V -20%+80%	
C1712	065T060322517Z 3	CAP CHIP 0603 2U2 16V Y5V -20%+80%	
C1709	065T060322517Z 3	CAP CHIP 0603 2U2 16V Y5V -20%+80%	
C1245	065T060322517Z 3	CAP CHIP 0603 2U2 16V Y5V -20%+80%	
C1244	065T060322517Z 3	CAP CHIP 0603 2U2 16V Y5V -20%+80%	
C1225	065T060368232K 3	CAP CHIP 0603 6N8 50V X7R +/-10%	
C1226	065T060368232K 3	CAP CHIP 0603 6N8 50V X7R +/-10%	
C6101	065T080547437Z 3	CAP CHIP 0805 470N 50V Y5V -20%+80%	
C4263	065T0805475A2K T	CAP CHIP 0805 4.7UF K 10V X7R	
C4415	065T0805475A2K T	CAP CHIP 0805 4.7UF K 10V X7R	
C4418	065T0805475A2K T	CAP CHIP 0805 4.7UF K 10V X7R	
C4201	065T120610612K Y	CER 1206 10U 16V X7R 10%	
C4206	065T120610612K Y	CER 1206 10U 16V X7R 10%	
C4208	065T120610612K Y	CER 1206 10U 16V X7R 10%	
C4216	065T120610612K Y	CER 1206 10U 16V X7R 10%	
C4222	065T120610612K Y	CER 1206 10U 16V X7R 10%	
C4224	065T120610612K Y	CER 1206 10U 16V X7R 10%	
C4226	065T120610612K Y	CER 1206 10U 16V X7R 10%	
C4231	065T120610612K Y	CER 1206 10U 16V X7R 10%	
C4234	065T120610612K Y	CER 1206 10U 16V X7R 10%	
C4401	065T120610612K Y	CER 1206 10U 16V X7R 10%	
C7117	065T120610612K Y	CER 1206 10U 16V X7R 10%	
C7125	065T120610612K Y	CER 1206 10U 16V X7R 10%	
C7158	065T120610612K Y	CER 1206 10U 16V X7R 10%	
C7156	067G 3111003CT	EC SMD 10UF 16V HV 4X5.5MM	
C7161	067G 3111003CT	EC SMD 10UF 16V HV 4X5.5MM	
C7132	067G 3111003CT	EC SMD 10UF 16V HV 4X5.5MM	
C1241	067G 3114703CT	EC SMD 47UF 16V HV 6.3X5.5MM	
C7132	067T 3111003ET	EC SMD 10UF 16V VEJ 4X5.3MM	
C7161	067T 3111003ET	EC SMD 10UF 16V VEJ 4X5.3MM	
C7156	067T 3111003ET	EC SMD 10UF 16V VEJ 4X5.3MM	
C1241	067T 3114703ET	EC SMD 47UF 16V VEJ 6.3X5.3MM	
FB7108	071G 56121 TA	IND FXD 0805 EMI 100MHZ 120R R	
FB1709	071G 56121 TA	IND FXD 0805 EMI 100MHZ 120R R	
FB1708	071G 56121 TA	IND FXD 0805 EMI 100MHZ 120R R	
FB1601	071G 56121 TA	IND FXD 0805 EMI 100MHZ 120R R	
FB1503	071G 56121 TA	IND FXD 0805 EMI 100MHZ 120R R	
FB1502	071G 56121 TA	IND FXD 0805 EMI 100MHZ 120R R	
FB1501	071G 56121 TA	IND FXD 0805 EMI 100MHZ 120R R	
FB1401	071G 56121 TA	IND FXD 0805 EMI 100MHZ 120R R	
FB1210	071G 56121 TA	IND FXD 0805 EMI 100MHZ 120R R	

英华家电维修资料软件专用 购买QQ:505966338

FB7109	071G 56121 TA	IND FXD 0805 EMI 100MHZ 120R R	
FB7208	071G 56121 TA	IND FXD 0805 EMI 100MHZ 120R R	
FB7206	071G 56121 TA	IND FXD 0805 EMI 100MHZ 120R R	
FB7205	071G 56121 TA	IND FXD 0805 EMI 100MHZ 120R R	
FB7202	071G 56121 TA	IND FXD 0805 EMI 100MHZ 120R R	
FB7201	071G 56121 TA	IND FXD 0805 EMI 100MHZ 120R R	
FB7119	071G 56121 TA	IND FXD 0805 EMI 100MHZ 120R R	
FB7117	071G 56121 TA	IND FXD 0805 EMI 100MHZ 120R R	
FB7116	071G 56121 TA	IND FXD 0805 EMI 100MHZ 120R R	
FB7114	071G 56121 TA	IND FXD 0805 EMI 100MHZ 120R R	
FB7112	071G 56121 TA	IND FXD 0805 EMI 100MHZ 120R R	
FB6104	071G 56K121 TA	CHIP BEAD 120R/6000MA HCB2012KF-121T60	
FB7105	071G 56K121 TA	CHIP BEAD 120R/6000MA HCB2012KF-121T60	
FB7203	071G 56K121 TA	CHIP BEAD 120R/6000MA HCB2012KF-121T60	
FB7204	071G 56K121 TA	CHIP BEAD 120R/6000MA HCB2012KF-121T60	
FB7207	071G 56K121 TA	CHIP BEAD 120R/6000MA HCB2012KF-121T60	
FB1713	071G 59A121 TA	CHIP BEAD 120R/3000MA HCB1608KF-121T30	
FB1712	071G 59A121 TA	CHIP BEAD 120R/3000MA HCB1608KF-121T30	
FB1711	071G 59A121 TA	CHIP BEAD 120R/3000MA HCB1608KF-121T30	
FB1710	071G 59A121 TA	CHIP BEAD 120R/3000MA HCB1608KF-121T30	
FB1707	071G 59A121 TA	CHIP BEAD 120R/3000MA HCB1608KF-121T30	
FB1706	071G 59A121 TA	CHIP BEAD 120R/3000MA HCB1608KF-121T30	
FB1704	071G 59A121 TA	CHIP BEAD 120R/3000MA HCB1608KF-121T30	
FB1703	071G 59A121 TA	CHIP BEAD 120R/3000MA HCB1608KF-121T30	
FB1702	071G 59A121 TA	CHIP BEAD 120R/3000MA HCB1608KF-121T30	
FB1701	071G 59A121 TA	CHIP BEAD 120R/3000MA HCB1608KF-121T30	
FB1209	071G 59A121 TA	CHIP BEAD 120R/3000MA HCB1608KF-121T30	
FB1208	071G 59A121 TA	CHIP BEAD 120R/3000MA HCB1608KF-121T30	
FB4201	071G 59A121 TA	CHIP BEAD 120R/3000MA HCB1608KF-121T30	
FB4403	071G 59A121 TA	CHIP BEAD 120R/3000MA HCB1608KF-121T30	
FB4401	071G 59A121 TA	CHIP BEAD 120R/3000MA HCB1608KF-121T30	
FB4211	071G 59A121 TA	CHIP BEAD 120R/3000MA HCB1608KF-121T30	
FB4210	071G 59A121 TA	CHIP BEAD 120R/3000MA HCB1608KF-121T30	
FB4209	071G 59A121 TA	CHIP BEAD 120R/3000MA HCB1608KF-121T30	
FB4208	071G 59A121 TA	CHIP BEAD 120R/3000MA HCB1608KF-121T30	
FB4207	071G 59A121 TA	CHIP BEAD 120R/3000MA HCB1608KF-121T30	
FB4206	071G 59A121 TA	CHIP BEAD 120R/3000MA HCB1608KF-121T30	
FB4205	071G 59A121 TA	CHIP BEAD 120R/3000MA HCB1608KF-121T30	
FB4204	071G 59A121 TA	CHIP BEAD 120R/3000MA HCB1608KF-121T30	
FB4203	071G 59A121 TA	CHIP BEAD 120R/3000MA HCB1608KF-121T30	
FB4202	071G 59A121 TA	CHIP BEAD 120R/3000MA HCB1608KF-121T30	
FB1602	071G 59D121 TA	CHIP BEAD 120R/600MA FCM1608KF-121T06	
FB1229	071G 59K300 TA	CHIP BEAD 0603 30R/700MA TAI-TECH	
FB1228	071G 59K300 TA	CHIP BEAD 0603 30R/700MA TAI-TECH	
FB1215	071G 59K300 TA	CHIP BEAD 0603 30R/700MA TAI-TECH	
FB1214	071G 59K300 TA	CHIP BEAD 0603 30R/700MA TAI-TECH	
FB1213	071G 59K300 TA	CHIP BEAD 0603 30R/700MA TAI-TECH	

英华家电维修资料软件专用 购买QQ:505966338

FB1212	071G 59K300 TA	CHIP BEAD 0603 30R/700MA TAI-TECH	
FB1211	071G 59K300 TA	CHIP BEAD 0603 30R/700MA TAI-TECH	
FB1207	071G 59K300 TA	CHIP BEAD 0603 30R/700MA TAI-TECH	
FB1206	071G 59K300 TA	CHIP BEAD 0603 30R/700MA TAI-TECH	
FB1205	071G 59K300 TA	CHIP BEAD 0603 30R/700MA TAI-TECH	
FB1204	071G 59K300 TA	CHIP BEAD 0603 30R/700MA TAI-TECH	
FB1203	071G 59K300 TA	CHIP BEAD 0603 30R/700MA TAI-TECH	
FB1202	071G 59K300 TA	CHIP BEAD 0603 30R/700MA TAI-TECH	
FB1201	071G 59K300 TA	CHIP BEAD 0603 30R/700MA TAI-TECH	
FB1402	071G 59K300 TA	CHIP BEAD 0603 30R/700MA TAI-TECH	
FB1403	071G 59K300 TA	CHIP BEAD 0603 30R/700MA TAI-TECH	
FB1404	071G 59K300 TA	CHIP BEAD 0603 30R/700MA TAI-TECH	
CN1601	088G 34019E VD	HDMI HEADER 19P HDM24A-19BM4YN10	
CN1501	088T 340 19 VD	HDMI HEADER 19P V/A	
CN1502	088T 340 19 VD	HDMI HEADER 19P V/A	
CN1601	088T 340 19TNR	HDMI HEADER 19P 5300-519-281-E1	
CN1502	088T 340 19TNS	HDMI HEADER 19P 5300-519-441-72	
CN1501	088T 340 19TNS	HDMI HEADER 19P 5300-519-441-72	
D1401	093G 60230	BAT54C(L43)	
D1501	093G 60230	BAT54C(L43)	
D1502	093G 60230	BAT54C(L43)	
D1503	093G 60230	BAT54C(L43)	
D1504	093G 60230	BAT54C(L43)	
D1505	093G 60230	BAT54C(L43)	
D1601	093G 60230	BAT54C(L43)	
D1401	093G 60505	DIO SIG SM BAT54C(PHSE)R	
D1501	093G 60505	DIO SIG SM BAT54C(PHSE)R	
D1502	093G 60505	DIO SIG SM BAT54C(PHSE)R	
D1503	093G 60505	DIO SIG SM BAT54C(PHSE)R	
D1504	093G 60505	DIO SIG SM BAT54C(PHSE)R	
D1505	093G 60505	DIO SIG SM BAT54C(PHSE)R	
D1601	093G 60505	DIO SIG SM BAT54C(PHSE)R	
ZD1504	093G 64 65 TY	SMD ESD PROTECTER PESD0603-240	
ZD1505	093G 64 65 TY	SMD ESD PROTECTER PESD0603-240	
ZD1506	093G 64 65 TY	SMD ESD PROTECTER PESD0603-240	
ZD1507	093G 64 65 TY	SMD ESD PROTECTER PESD0603-240	
ZD1508	093G 64 65 TY	SMD ESD PROTECTER PESD0603-240	
ZD1509	093G 64 65 TY	SMD ESD PROTECTER PESD0603-240	
ZD1511	093G 64 65 TY	SMD ESD PROTECTER PESD0603-240	
ZD1512	093G 64 65 TY	SMD ESD PROTECTER PESD0603-240	
ZD1513	093G 64 65 TY	SMD ESD PROTECTER PESD0603-240	
X4201	093G 22S903 C	CRYSTAL 14M318 18P HC49/S	
ZD6101	093G 39S 47	BZX84C3V6 SOT-23	
ZD1401	093G 39S901 T	DIODE BZX84-C5V6 SOT-23 VISHAY	
ZD1402	093G 39S901 T	DIODE BZX84-C5V6 SOT-23 VISHAY	
ZD1403	093G 39S901 T	DIODE BZX84-C5V6 SOT-23 VISHAY	
ZD1404	093G 39S901 T	DIODE BZX84-C5V6 SOT-23 VISHAY	

英华家电维修资料软件专用 购买QQ:505966338

ZD1405	093G 39S901 T	DIODE BZX84-C5V6 SOT-23 VISHAY	
ZD1501	093G 39S901 T	DIODE BZX84-C5V6 SOT-23 VISHAY	
ZD1502	093G 39S901 T	DIODE BZX84-C5V6 SOT-23 VISHAY	
ZD1510	093G 39S901 T	DIODE BZX84-C5V6 SOT-23 VISHAY	
ZD1601	093G 39S901 T	DIODE BZX84-C5V6 SOT-23 VISHAY	
ZD7402	093G 39S901 T	DIODE BZX84-C5V6 SOT-23 VISHAY	
ZD7404	093G 39S901 T	DIODE BZX84-C5V6 SOT-23 VISHAY	
ZD7405	093G 39S901 T	DIODE BZX84-C5V6 SOT-23 VISHAY	
ZD7406	093G 39S901 T	DIODE BZX84-C5V6 SOT-23 VISHAY	
ZD7406	093G 39S911 T	DIODE BZX84-C5V6 SOT-23 PHILIPS	
ZD7405	093G 39S911 T	DIODE BZX84-C5V6 SOT-23 PHILIPS	
ZD7404	093G 39S911 T	DIODE BZX84-C5V6 SOT-23 PHILIPS	
ZD7402	093G 39S911 T	DIODE BZX84-C5V6 SOT-23 PHILIPS	
ZD1601	093G 39S911 T	DIODE BZX84-C5V6 SOT-23 PHILIPS	
ZD1510	093G 39S911 T	DIODE BZX84-C5V6 SOT-23 PHILIPS	
ZD1502	093G 39S911 T	DIODE BZX84-C5V6 SOT-23 PHILIPS	
ZD1501	093G 39S911 T	DIODE BZX84-C5V6 SOT-23 PHILIPS	
ZD1405	093G 39S911 T	DIODE BZX84-C5V6 SOT-23 PHILIPS	
ZD1404	093G 39S911 T	DIODE BZX84-C5V6 SOT-23 PHILIPS	
ZD1403	093G 39S911 T	DIODE BZX84-C5V6 SOT-23 PHILIPS	
ZD1402	093G 39S911 T	DIODE BZX84-C5V6 SOT-23 PHILIPS	
ZD1401	093G 39S911 T	DIODE BZX84-C5V6 SOT-23 PHILIPS	
ZD7102	093G 60S801	DIODE SSA34 VISHAY	
ZD7101	093G 60S801	DIODE SSA34 VISHAY	
D1506	093G 64S3PH	BAS32L	
D1507	093G 64S3PH	BAS32L	
D1602	093G 64S3PH	BAS32L	
D7102	093G 64S3PH	BAS32L	
D7104	093G 64S3PH	BAS32L	
D7105	093G 64S3PH	BAS32L	
D1507	093G 64S522SEM	LL4148	
D1506	093G 64S522SEM	LL4148	
D1602	093G 64S522SEM	LL4148	
D7102	093G 64S522SEM	LL4148	
D7104	093G 64S522SEM	LL4148	
D7105	093G 64S522SEM	LL4148	
D7105	093G 64S901 T	DIODE LS4148	
D7104	093G 64S901 T	DIODE LS4148	
D7102	093G 64S901 T	DIODE LS4148	
D1602	093G 64S901 T	DIODE LS4148	
D1507	093G 64S901 T	DIODE LS4148	
D1506	093G 64S901 T	DIODE LS4148	
D7101	093G1020 PH	DIODE S1D-E3 VISHAY	
	715G3422 2	TV MAIN-PCB 225X220X1.6MM FR4 1OZ DS	
Q1602	057G 417 18 T	PMBT3904 SOT-23	
Q1603	057G 417 18 T	PMBT3904 SOT-23	
Q1604	057G 417 18 T	PMBT3904 SOT-23	

英华家电维修资料软件专用 购买QQ:505966338

Q1605	057G 417 18 T	PMBT3904 SOT-23	
Q1606	057G 417 18 T	PMBT3904 SOT-23	
Q1607	057G 417 18 T	PMBT3904 SOT-23	
Q7104	057G 761 15	PDTC114ET SOT23	
Q7102	057G 761 15	PDTC114ET SOT23	
Q6101	057G 761 15	PDTC114ET SOT23	
C6123	065G080510432K F	CAP CHIP 0805 0.1UF K 50V X7R	
C6124	065G080510432K F	CAP CHIP 0805 0.1UF K 50V X7R	
C6128	065G080510432K F	CAP CHIP 0805 0.1UF K 50V X7R	
C1605	065G1206226A7Z T	CAP CHIP 1206 22UF Z 10V Y5V	
C1606	065G1206226A7Z T	CAP CHIP 1206 22UF Z 10V Y5V	
C1607	065G1206226A7Z T	CAP CHIP 1206 22UF Z 10V Y5V	
U4203	070GHDCP500HDC	HDCP CODE	MSTARTV-HDCP
	INTV9QGGMSA5	INVERTER BOARD	
	040G 45762412B	CBPC LABEL	
CN8802	033G8029 3A H	B2P3S-VH	
CN8810	033T8021 2A U	CONN 13.0MM 2P R/A	
CN8809	033T8021 2A U	CONN 13.0MM 2P R/A	
CN8808	033T8021 2A U	CONN 13.0MM 2P R/A	
CN8807	033T8021 2A U	CONN 13.0MM 2P R/A	
CN8806	033T8021 2A U	CONN 13.0MM 2P R/A	
CN8805	033T8021 2A U	CONN 13.0MM 2P R/A	
CN8804	033T8021 2A U	CONN 13.0MM 2P R/A	
CN8803	033T8021 2A U	CONN 13.0MM 2P R/A	
C8819	065G 6J3096ET	CER CAP 3PF J 6KV	
C8818	065G 6J3096ET	CER CAP 3PF J 6KV	
C8817	065G 6J3096ET	CER CAP 3PF J 6KV	
C8816	065G 6J3096ET	CER CAP 3PF J 6KV	
C8815	065G 6J3096ET	CER CAP 3PF J 6KV	
C8814	065G 6J3096ET	CER CAP 3PF J 6KV	
C8813	065G 6J3096ET	CER CAP 3PF J 6KV	
C8812	065G 6J3096ET	CER CAP 3PF J 6KV	
C8802	065G 6J3096ET	CER CAP 3PF J 6KV	
C8805	065G 6J3096ET	CER CAP 3PF J 6KV	
C8806	065G 6J3096ET	CER CAP 3PF J 6KV	
C8807	065G 6J3096ET	CER CAP 3PF J 6KV	
C8808	065G 6J3096ET	CER CAP 3PF J 6KV	
C8809	065G 6J3096ET	CER CAP 3PF J 6KV	
C8810	065G 6J3096ET	CER CAP 3PF J 6KV	
C8811	065G 6J3096ET	CER CAP 3PF J 6KV	
T8809	080GL42T 22 DN	X'FMR 140UH TK.2801H.101	
T8808	080GL42T 22 DN	X'FMR 140UH TK.2801H.101	
T8807	080GL42T 22 DN	X'FMR 140UH TK.2801H.101	
T8806	080GL42T 22 DN	X'FMR 140UH TK.2801H.101	
T8805	080GL42T 22 DN	X'FMR 140UH TK.2801H.101	
T8804	080GL42T 22 DN	X'FMR 140UH TK.2801H.101	

英华家电维修资料软件专用 购买QQ:505966338

T8803	080GL42T 22 DN	X'FMR 140UH TK.2801H.101	
T8802	080GL42T 22 DN	X'FMR 140UH TK.2801H.101	
T8801	080GL42T 22 DN	X'FMR 140UH TK.2801H.101	
T8810	080GL42T 22 DN	X'FMR 140UH TK.2801H.101	
T8811	080GL42T 22 DN	X'FMR 140UH TK.2801H.101	
T8812	080GL42T 22 DN	X'FMR 140UH TK.2801H.101	
T8813	080GL42T 22 DN	X'FMR 140UH TK.2801H.101	
T8814	080GL42T 22 DN	X'FMR 140UH TK.2801H.101	
T8815	080GL42T 22 DN	X'FMR 140UH TK.2801H.101	
T8816	080GL42T 22 DN	X'FMR 140UH TK.2801H.101	
CN8801	095G 825 6D505	HARNESS 6P(SCN)-5P(PLUG) 230MM	
CN8801	095G 825 6W505	HARNESS 6P(SCN)-5P(PLUG) 230MM	
R8822	061G0805000	RST CHIP MAX 0R05 1/8W	
R8823	061G0805000	RST CHIP MAX 0R05 1/8W	
R8824	061G0805000	RST CHIP MAX 0R05 1/8W	
R8825	061G0805000	RST CHIP MAX 0R05 1/8W	
R8826	061G0805000	RST CHIP MAX 0R05 1/8W	
R8827	061G0805000	RST CHIP MAX 0R05 1/8W	
R8828	061G0805000	RST CHIP MAX 0R05 1/8W	
R8829	061G0805000	RST CHIP MAX 0R05 1/8W	
R8801	061G0805101	1ST CHIPR 100 OHM +-5% 1/8W	
R8802	061G0805101	1ST CHIPR 100 OHM +-5% 1/8W	
R8803	061G0805101	1ST CHIPR 100 OHM +-5% 1/8W	
R8806	061G0805101	1ST CHIPR 100 OHM +-5% 1/8W	
R8808	061G0805101	1ST CHIPR 100 OHM +-5% 1/8W	
R8809	061G0805101	1ST CHIPR 100 OHM +-5% 1/8W	
R8810	061G0805101	1ST CHIPR 100 OHM +-5% 1/8W	
R8804	061G0805103	RST CHIPR 10K OHM +-5% 1/8W	
R8820	061G0805103	RST CHIPR 10K OHM +-5% 1/8W	
R8821	061G0805103	RST CHIPR 10K OHM +-5% 1/8W	
R8805	061G0805104	RST CHIPR 100K OHM +-5% 1/8W	
R8807	061G0805104	RST CHIPR 100K OHM +-5% 1/8W	
R8830	061G0805243	RST CHIPR 24 KOHM +-5% 1/8W	
R8818	061G0805393	RST CHIPR 39KOHM +-5% 1/8W	
R8819	061G0805393	RST CHIPR 39KOHM +-5% 1/8W	
R8811	061G0805511	RST CHIPR 510 OHM +-5% 1/8W	
R8812	061G0805511	RST CHIPR 510 OHM +-5% 1/8W	
R8813	061G0805511	RST CHIPR 510 OHM +-5% 1/8W	
R8814	061G0805511	RST CHIPR 510 OHM +-5% 1/8W	
R8815	061G0805511	RST CHIPR 510 OHM +-5% 1/8W	
R8816	061G0805511	RST CHIPR 510 OHM +-5% 1/8W	
R8817	061G0805511	RST CHIPR 510 OHM +-5% 1/8W	
RJ8810	061G1206000	RST CHIP MAX 0R05 1/4W	
RJ8811	061G1206000	RST CHIP MAX 0R05 1/4W	
RJ8812	061G1206000	RST CHIP MAX 0R05 1/4W	
RJ8813	061G1206000	RST CHIP MAX 0R05 1/4W	
RJ8814	061G1206000	RST CHIP MAX 0R05 1/4W	

英华家电维修资料软件专用 购买QQ:505966338

RJ8815	061G1206000	RST CHIP MAX 0R05 1/4W	
RJ8816	061G1206000	RST CHIP MAX 0R05 1/4W	
RJ8817	061G1206000	RST CHIP MAX 0R05 1/4W	
RJ8822	061G1206000	RST CHIP MAX 0R05 1/4W	
C8801	065G080510332K Y	CAP CHIP 0805 10N 50V X7R +/-10%	
C8834	065G080556131G F	CAP CHIP 0805 560PF G 50V NPO	
C8804	065G080556131G F	CAP CHIP 0805 560PF G 50V NPO	
C8803	065G080556131G F	CAP CHIP 0805 560PF G 50V NPO	
C8820	065G080556231J Y	CAP CHIP 0805 5600PF J 50V NPO	
C8821	065G080556231J Y	CAP CHIP 0805 5600PF J 50V NPO	
C8822	065G080556231J Y	CAP CHIP 0805 5600PF J 50V NPO	
C8823	065G080556231J Y	CAP CHIP 0805 5600PF J 50V NPO	
C8824	065G080556231J Y	CAP CHIP 0805 5600PF J 50V NPO	
C8825	065G080556231J Y	CAP CHIP 0805 5600PF J 50V NPO	
C8826	065G080556231J Y	CAP CHIP 0805 5600PF J 50V NPO	
C8827	065G080556231J Y	CAP CHIP 0805 5600PF J 50V NPO	
C8828	065G080556231J Y	CAP CHIP 0805 5600PF J 50V NPO	
C8829	065G080556231J Y	CAP CHIP 0805 5600PF J 50V NPO	
C8830	065G080556231J Y	CAP CHIP 0805 5600PF J 50V NPO	
C8831	065G080556231J Y	CAP CHIP 0805 5600PF J 50V NPO	
C8832	065G080556231J Y	CAP CHIP 0805 5600PF J 50V NPO	
C8833	065G080556231J Y	CAP CHIP 0805 5600PF J 50V NPO	
D8824	093G 64 33	DIO SIG SM BAV99 (PHSE)R	
D8811	093G 64 33	DIO SIG SM BAV99 (PHSE)R	
D8812	093G 64 33	DIO SIG SM BAV99 (PHSE)R	
D8813	093G 64 33	DIO SIG SM BAV99 (PHSE)R	
D8814	093G 64 33	DIO SIG SM BAV99 (PHSE)R	
D8815	093G 64 33	DIO SIG SM BAV99 (PHSE)R	
D8816	093G 64 33	DIO SIG SM BAV99 (PHSE)R	
D8823	093G 64 33	DIO SIG SM BAV99 (PHSE)R	
D8822	093G 64 33	DIO SIG SM BAV99 (PHSE)R	
D8821	093G 64 33	DIO SIG SM BAV99 (PHSE)R	
D8820	093G 64 33	DIO SIG SM BAV99 (PHSE)R	
D8819	093G 64 33	DIO SIG SM BAV99 (PHSE)R	
D8818	093G 64 33	DIO SIG SM BAV99 (PHSE)R	
D8817	093G 64 33	DIO SIG SM BAV99 (PHSE)R	
D8824	093G 6433S	DIODE BAV99 SEMTECH	
D8823	093G 6433S	DIODE BAV99 SEMTECH	
D8822	093G 6433S	DIODE BAV99 SEMTECH	
D8821	093G 6433S	DIODE BAV99 SEMTECH	
D8820	093G 6433S	DIODE BAV99 SEMTECH	
D8819	093G 6433S	DIODE BAV99 SEMTECH	
D8818	093G 6433S	DIODE BAV99 SEMTECH	
D8817	093G 6433S	DIODE BAV99 SEMTECH	
D8816	093G 6433S	DIODE BAV99 SEMTECH	
D8815	093G 6433S	DIODE BAV99 SEMTECH	
D8814	093G 6433S	DIODE BAV99 SEMTECH	

英华家电维修资料软件专用 购买QQ:505966338

D8813	093G 6433S	DIODE BAV99 SEMTECH	
D8812	093G 6433S	DIODE BAV99 SEMTECH	
D8811	093G 6433S	DIODE BAV99 SEMTECH	
D8805	093G 3919552T	DIODE MTZJ T-72 5.1B 500MW/5.1V DO-34	
D8827	093G 64 1152T	1N4148	
D8826	093G 64 1152T	1N4148	
D8825	093G 64 1152T	1N4148	
D8808	093G 64 1152T	1N4148	
D8807	093G 64 1152T	1N4148	
D8806	093G 64 1152T	1N4148	
D8804	093G 64 1152T	1N4148	
D8803	093G 64 1152T	1N4148	
D8802	093G 64 1152T	1N4148	
D8801	093G 64 1152T	1N4148	
D8806	093G 64 1152T FA	SWITCH DIODE 1N4148 BY FAIRCHILD	
D8807	093G 64 1152T FA	SWITCH DIODE 1N4148 BY FAIRCHILD	
D8808	093G 64 1152T FA	SWITCH DIODE 1N4148 BY FAIRCHILD	
D8825	093G 64 1152T FA	SWITCH DIODE 1N4148 BY FAIRCHILD	
D8826	093G 64 1152T FA	SWITCH DIODE 1N4148 BY FAIRCHILD	
D8827	093G 64 1152T FA	SWITCH DIODE 1N4148 BY FAIRCHILD	
D8804	093G 64 1152T FA	SWITCH DIODE 1N4148 BY FAIRCHILD	
D8803	093G 64 1152T FA	SWITCH DIODE 1N4148 BY FAIRCHILD	
D8802	093G 64 1152T FA	SWITCH DIODE 1N4148 BY FAIRCHILD	
D8801	093G 64 1152T FA	SWITCH DIODE 1N4148 BY FAIRCHILD	
D8827	093G 64 1152T PH	SWITCH DIODE 1N4148 BY PHILIPS	
D8826	093G 64 1152T PH	SWITCH DIODE 1N4148 BY PHILIPS	
D8825	093G 64 1152T PH	SWITCH DIODE 1N4148 BY PHILIPS	
D8808	093G 64 1152T PH	SWITCH DIODE 1N4148 BY PHILIPS	
D8807	093G 64 1152T PH	SWITCH DIODE 1N4148 BY PHILIPS	
D8806	093G 64 1152T PH	SWITCH DIODE 1N4148 BY PHILIPS	
D8801	093G 64 1152T PH	SWITCH DIODE 1N4148 BY PHILIPS	
D8802	093G 64 1152T PH	SWITCH DIODE 1N4148 BY PHILIPS	
D8803	093G 64 1152T PH	SWITCH DIODE 1N4148 BY PHILIPS	
D8804	093G 64 1152T PH	SWITCH DIODE 1N4148 BY PHILIPS	
J8807	095G 90 23	JUMPER WIRE	
J8808	095G 90 23	JUMPER WIRE	
J8806	095G 90 23	JUMPER WIRE	
J8805	095G 90 23	JUMPER WIRE	
J8809	095G 90 23	JUMPER WIRE	
J8819	095G 90 23	JUMPER WIRE	
J8820	095G 90 23	JUMPER WIRE	
J8821	095G 90 23	JUMPER WIRE	
J8804	095G 90 23	JUMPER WIRE	
J8803	095G 90 23	JUMPER WIRE	
J8802	095G 90 23	JUMPER WIRE	
J8801	095G 90 23	JUMPER WIRE	
	715G3358 1	TV POWER-PCB 90*480MM 1.6MM CEM-1 SS	

英华家电维修资料软件专用 购买QQ:505966338

C8801	065G080510332K 3	CAP CHIP 0805 10N 50V X7R +/-10%	
C8820	065G0805562 31	CHIP 5600PF 50V NPO 0805	
C8821	065G0805562 31	CHIP 5600PF 50V NPO 0805	
C8822	065G0805562 31	CHIP 5600PF 50V NPO 0805	
C8823	065G0805562 31	CHIP 5600PF 50V NPO 0805	
C8824	065G0805562 31	CHIP 5600PF 50V NPO 0805	
C8825	065G0805562 31	CHIP 5600PF 50V NPO 0805	
C8826	065G0805562 31	CHIP 5600PF 50V NPO 0805	
C8827	065G0805562 31	CHIP 5600PF 50V NPO 0805	
C8828	065G0805562 31	CHIP 5600PF 50V NPO 0805	
C8829	065G0805562 31	CHIP 5600PF 50V NPO 0805	
C8830	065G0805562 31	CHIP 5600PF 50V NPO 0805	
C8831	065G0805562 31	CHIP 5600PF 50V NPO 0805	
C8832	065G0805562 31	CHIP 5600PF 50V NPO 0805	
C8833	065G0805562 31	CHIP 5600PF 50V NPO 0805	
C8820	065G080556231J F	CAP CHIP 0805 5600PF J 50V NPO	
C8821	065G080556231J F	CAP CHIP 0805 5600PF J 50V NPO	
C8822	065G080556231J F	CAP CHIP 0805 5600PF J 50V NPO	
C8823	065G080556231J F	CAP CHIP 0805 5600PF J 50V NPO	
C8824	065G080556231J F	CAP CHIP 0805 5600PF J 50V NPO	
C8825	065G080556231J F	CAP CHIP 0805 5600PF J 50V NPO	
C8826	065G080556231J F	CAP CHIP 0805 5600PF J 50V NPO	
C8827	065G080556231J F	CAP CHIP 0805 5600PF J 50V NPO	
C8828	065G080556231J F	CAP CHIP 0805 5600PF J 50V NPO	
C8829	065G080556231J F	CAP CHIP 0805 5600PF J 50V NPO	
C8830	065G080556231J F	CAP CHIP 0805 5600PF J 50V NPO	
C8831	065G080556231J F	CAP CHIP 0805 5600PF J 50V NPO	
C8832	065G080556231J F	CAP CHIP 0805 5600PF J 50V NPO	
C8833	065G080556231J F	CAP CHIP 0805 5600PF J 50V NPO	
T8808	S80GL42T22V	TRANSFORMER ASS'Y	
	Q34FPE16P01	EEL-16 COVER	
	S80GL42T22VZ	TRANSFORMER ASS'Y	
T8811	S80GL42T22V	TRANSFORMER ASS'Y	
	Q34FPE16P01	EEL-16 COVER	
	S80GL42T22VZ	TRANSFORMER ASS'Y	
T8816	S80GL42T22V	TRANSFORMER ASS'Y	
	Q34FPE16P01	EEL-16 COVER	
	S80GL42T22VZ	TRANSFORMER ASS'Y	
T8802	S80GL42T22V	TRANSFORMER ASS'Y	
	Q34FPE16P01	EEL-16 COVER	
	S80GL42T22VZ	TRANSFORMER ASS'Y	
T8805	S80GL42T22V	TRANSFORMER ASS'Y	
	Q34FPE16P01	EEL-16 COVER	
	S80GL42T22VZ	TRANSFORMER ASS'Y	
T8809	S80GL42T22V	TRANSFORMER ASS'Y	
	Q34FPE16P01	EEL-16 COVER	
	S80GL42T22VZ	TRANSFORMER ASS'Y	

英华家电维修资料软件专用 购买QQ:505966338

T8810	S80GL42T22V	TRANSFORMER ASS'Y	
	Q34FPE16P01	EEL-16 COVER	
	S80GL42T22VZ	TRANSFORMER ASS'Y	
T8815	S80GL42T22V	TRANSFORMER ASS'Y	
	Q34FPE16P01	EEL-16 COVER	
	S80GL42T22VZ	TRANSFORMER ASS'Y	
T8812	S80GL42T22V	TRANSFORMER ASS'Y	
	Q34FPE16P01	EEL-16 COVER	
	S80GL42T22VZ	TRANSFORMER ASS'Y	
T8804	S80GL42T22V	TRANSFORMER ASS'Y	
	Q34FPE16P01	EEL-16 COVER	
	S80GL42T22VZ	TRANSFORMER ASS'Y	
T8803	S80GL42T22V	TRANSFORMER ASS'Y	
	Q34FPE16P01	EEL-16 COVER	
	S80GL42T22VZ	TRANSFORMER ASS'Y	
T8814	S80GL42T22V	TRANSFORMER ASS'Y	
	Q34FPE16P01	EEL-16 COVER	
	S80GL42T22VZ	TRANSFORMER ASS'Y	
T8801	S80GL42T22V	TRANSFORMER ASS'Y	
	Q34FPE16P01	EEL-16 COVER	
	S80GL42T22VZ	TRANSFORMER ASS'Y	
T8807	S80GL42T22V	TRANSFORMER ASS'Y	
	Q34FPE16P01	EEL-16 COVER	
	S80GL42T22VZ	TRANSFORMER ASS'Y	
T8813	S80GL42T22V	TRANSFORMER ASS'Y	
	Q34FPE16P01	EEL-16 COVER	
	S80GL42T22VZ	TRANSFORMER ASS'Y	
T8806	S80GL42T22V	TRANSFORMER ASS'Y	
	Q34FPE16P01	EEL-16 COVER	
	S80GL42T22VZ	TRANSFORMER ASS'Y	
	P15T0433101	BRACKET_BASE	
	P15T0434201	BRACKET_PCB_SUPPORT	
	P15T0435201	BRACKET_SIDE_AV_CN	
	P15T0436101	BRACKET_VESA	
	P15T0446101	BRACKET_IPTV	
	P85T0102101	SHIELD_INVERTER	
	040G 45762412B	CBPC LABEL	
CN301	033G3802 6B Y	CONN 6PIN 2.0	
CN701	033G3802 7B Y	CONNECTOR 7P 2.0 DIP	
L301	073T 253916 H	CHOKE COIL 15UH+/-10% 38MOHM DR10*8	
L301	073T 253916 L	CHOKE COIL 15UH+/-10% 38MOHM DR10*8	
L301	073T 253916 LS	CHOKE COIL 15UH+/-10% 38MOHM DR10*8	
J801	088G 342A00 CL	RJ45 CONNECTOR (WITH LED)	
J801	088G 342A00 TN	RJ45 CONNECTOR (WITH LED)	
CN401	088G 350A00 YG	USB CONNECTOR AX2 TYPE USB-202	
C402	067G 3051012CT	EC 100UF 10V KM 5X11MM	
C412	067G 3051012CT	EC 100UF 10V KM 5X11MM	

英华家电维修资料软件专用 购买QQ:505966338

C533	067G 3051012CT	EC 100UF 10V KM 5X11MM	
C619	067G 3051012CT	EC 100UF 10V KM 5X11MM	
C801	067G 3051012CT	EC 100UF 10V KM 5X11MM	
C321	067G 3051012CT	EC 100UF 10V KM 5X11MM	
C309	067G215Y2212KT	LOW ESR EC 220UF 10V 6.3*11MM	
C801	067T 3051012ET	EC 100UF 10V RGA 5X11MM	
C533	067T 3051012ET	EC 100UF 10V RGA 5X11MM	
C619	067T 3051012ET	EC 100UF 10V RGA 5X11MM	
C402	067T 3051012ET	EC 100UF 10V RGA 5X11MM	
C412	067T 3051012ET	EC 100UF 10V RGA 5X11MM	
C321	067T 3051012ET	EC 100UF 10V RGA 5X11MM	
C321	067T 3051012KT	EC 100UF 10V PF 5X11MM	
C402	067T 3051012KT	EC 100UF 10V PF 5X11MM	
C412	067T 3051012KT	EC 100UF 10V PF 5X11MM	
C533	067T 3051012KT	EC 100UF 10V PF 5X11MM	
C619	067T 3051012KT	EC 100UF 10V PF 5X11MM	
C801	067T 3051012KT	EC 100UF 10V PF 5X11MM	
C309	067T215Y2212CT	EC 220UF 10V GL 6.3X11MM	
C304	067T305S4712CT	EC 470UF 10V KW 8X9MM	
U301	056G 133 30AAC	AZ1117H-ADJ-E1	
U402	056G 545900	IC GL852-MNG03 LQFP48	
U301	056G 563922	AME1117ACGTZ	
U301	056G 585 10	IC AP1117ELA-ADJ	
U801	056G 665A27	IC LAN8700C-AEZG	
U501	056G1133 34	M24C02-WMN6TP	
U991	056G1133127	IC HY27UF082G2B-TPCB 2GB TSOP1-48	
U501	056G1133918	IC AT24C02BN-SH-T 8-SOIC	
U603	056G1133939	IC MX25L3205DM2I-12G SOP-8	
U302	056T 563952	IC SC4524BSETRT SO-8	
U601	056T 615 73	IC HY57V281620FTP-6-C 128MB TSOPII-54	
U602	056T 615 73	IC HY57V281620FTP-6-C 128MB TSOPII-54	
U502	056T 643600	IC AP1701FWL	
U401	056T 665918	IC STMPS2171STR SOT23-5L	
U802	056T4LVC 04 P	IC 74LVC04AD SO-14	
R601	061G0603000 T	RST CHIP MAX 0R05 1/10W	
R612	061G0603000 T	RST CHIP MAX 0R05 1/10W	
R518	061G0603000 T	RST CHIP MAX 0R05 1/10W	
R508	061G0603000 T	RST CHIP MAX 0R05 1/10W	
R418	061G0603000 T	RST CHIP MAX 0R05 1/10W	
R704	061G0603000 T	RST CHIP MAX 0R05 1/10W	
R705	061G0603000 T	RST CHIP MAX 0R05 1/10W	
R414	061G0603000 T	RST CHIP MAX 0R05 1/10W	
R412	061G0603000 T	RST CHIP MAX 0R05 1/10W	
R409	061G0603000 T	RST CHIP MAX 0R05 1/10W	
R402	061G0603000 T	RST CHIP MAX 0R05 1/10W	
R705	061G0603000 Y	RST CHIP MAX 0R05 1/10W YAGEO	
R704	061G0603000 Y	RST CHIP MAX 0R05 1/10W YAGEO	

英华家电维修资料软件专用 购买QQ:505966338

R612	061G0603000 Y	RST CHIP MAX 0R05 1/10W YAGEO	
R601	061G0603000 Y	RST CHIP MAX 0R05 1/10W YAGEO	
R518	061G0603000 Y	RST CHIP MAX 0R05 1/10W YAGEO	
R508	061G0603000 Y	RST CHIP MAX 0R05 1/10W YAGEO	
R418	061G0603000 Y	RST CHIP MAX 0R05 1/10W YAGEO	
R414	061G0603000 Y	RST CHIP MAX 0R05 1/10W YAGEO	
R412	061G0603000 Y	RST CHIP MAX 0R05 1/10W YAGEO	
R409	061G0603000 Y	RST CHIP MAX 0R05 1/10W YAGEO	
R402	061G0603000 Y	RST CHIP MAX 0R05 1/10W YAGEO	
R505	061G06031001FT	RST CHIP 1K 1/10W 1%	
R505	061G06031001FY	RST CHIPR 1KOHM +-1% 1/10W YAGEO	
R308	061G06031002FT	RST CHIP 10K 1/10W 1%	
R308	061G06031002FY	RST CHIPR 10KOHM +-1% 1/10W YAGEO	
R802	061G06031009FT	RST CHIP R 10OHM +/-1% 1/10W	
R802	061G06031009FY	RST CHIP R 10OHM +/-1% 1/10W	
R302	061G0603101 T	RST CHIP 100R 1/10W 5%	
R303	061G0603101 T	RST CHIP 100R 1/10W 5%	
R703	061G0603101 T	RST CHIP 100R 1/10W 5%	
R706	061G0603101 T	RST CHIP 100R 1/10W 5%	
R960	061G0603101 T	RST CHIP 100R 1/10W 5%	
R961	061G0603101 T	RST CHIP 100R 1/10W 5%	
R962	061G0603101 T	RST CHIP 100R 1/10W 5%	
R963	061G0603101 T	RST CHIP 100R 1/10W 5%	
R963	061G0603101 Y	RST CHIPR 100 OHM +-5% 1/10W YAGEO	
R962	061G0603101 Y	RST CHIPR 100 OHM +-5% 1/10W YAGEO	
R961	061G0603101 Y	RST CHIPR 100 OHM +-5% 1/10W YAGEO	
R960	061G0603101 Y	RST CHIPR 100 OHM +-5% 1/10W YAGEO	
R706	061G0603101 Y	RST CHIPR 100 OHM +-5% 1/10W YAGEO	
R703	061G0603101 Y	RST CHIPR 100 OHM +-5% 1/10W YAGEO	
R303	061G0603101 Y	RST CHIPR 100 OHM +-5% 1/10W YAGEO	
R302	061G0603101 Y	RST CHIPR 100 OHM +-5% 1/10W YAGEO	
R834	061G0603103 T	RST CHIP 10K 1/10W 5%	
R831	061G0603103 T	RST CHIP 10K 1/10W 5%	
R830	061G0603103 T	RST CHIP 10K 1/10W 5%	
R829	061G0603103 T	RST CHIP 10K 1/10W 5%	
R828	061G0603103 T	RST CHIP 10K 1/10W 5%	
R827	061G0603103 T	RST CHIP 10K 1/10W 5%	
R318	061G0603103 T	RST CHIP 10K 1/10W 5%	
R410	061G0603103 T	RST CHIP 10K 1/10W 5%	
R807	061G0603103 T	RST CHIP 10K 1/10W 5%	
R808	061G0603103 T	RST CHIP 10K 1/10W 5%	
R809	061G0603103 T	RST CHIP 10K 1/10W 5%	
R815	061G0603103 T	RST CHIP 10K 1/10W 5%	
R834	061G0603103 Y	RST CHIPR 10KOHM +-5% 1/10W YAGEO	
R831	061G0603103 Y	RST CHIPR 10KOHM +-5% 1/10W YAGEO	
R830	061G0603103 Y	RST CHIPR 10KOHM +-5% 1/10W YAGEO	
R829	061G0603103 Y	RST CHIPR 10KOHM +-5% 1/10W YAGEO	

英华家电维修资料软件专用 购买QQ:505966338

R828	061G0603103 Y	RST CHIPR 10KOHM +-5% 1/10W YAGEO	
R827	061G0603103 Y	RST CHIPR 10KOHM +-5% 1/10W YAGEO	
R815	061G0603103 Y	RST CHIPR 10KOHM +-5% 1/10W YAGEO	
R809	061G0603103 Y	RST CHIPR 10KOHM +-5% 1/10W YAGEO	
R808	061G0603103 Y	RST CHIPR 10KOHM +-5% 1/10W YAGEO	
R807	061G0603103 Y	RST CHIPR 10KOHM +-5% 1/10W YAGEO	
R410	061G0603103 Y	RST CHIPR 10KOHM +-5% 1/10W YAGEO	
R318	061G0603103 Y	RST CHIPR 10KOHM +-5% 1/10W YAGEO	
R525	061G0603104 T	RST CHIP 100K 1/10W 5%	
R502	061G0603104 T	RST CHIP 100K 1/10W 5%	
R403	061G0603104 T	RST CHIP 100K 1/10W 5%	
R403	061G0603104 Y	RST CHIPR 100KOHM +-5% 1/10W YAGEO	
R502	061G0603104 Y	RST CHIPR 100KOHM +-5% 1/10W YAGEO	
R525	061G0603104 Y	RST CHIPR 100KOHM +-5% 1/10W YAGEO	
R423	061G0603105 T	RST CHIP 1M 1/10W 5%	
R423	061G0603105 Y	RST CHIPR 1MOHM +-5% 1/10W YAGEO	
R314	061G06031200FY	RST CHIPR 120 OHM +-1% 1/10W YAGEO	
R840	061G06031242FT	RST CHIP 12K4 1/10W 1%	
R840	061G06031242FY	RST CHIP 12K4 1/10W 1%	
R888	061G06031500FT	RST CHIP 150R 1/10W 1%	
R888	061G06031500FY	BRST CHIPR 150 OHM +-1% 1/10W YAGEO	
R810	061G0603152 T	RST CHIP 1K5 1/10W 5%	
R811	061G0603152 T	RST CHIP 1K5 1/10W 5%	
R810	061G0603152 Y	RST CHIPR 1.5KOHM +-5% 1/10W YAGEO	
R811	061G0603152 Y	RST CHIPR 1.5KOHM +-5% 1/10W YAGEO	
R422	061G0603153 T	RST CHIP 15K 1/10W 5%	
R421	061G0603153 T	RST CHIP 15K 1/10W 5%	
R420	061G0603153 T	RST CHIP 15K 1/10W 5%	
R419	061G0603153 T	RST CHIP 15K 1/10W 5%	
R415	061G0603153 T	RST CHIP 15K 1/10W 5%	
R408	061G0603153 T	RST CHIP 15K 1/10W 5%	
R407	061G0603153 T	RST CHIP 15K 1/10W 5%	
R401	061G0603153 T	RST CHIP 15K 1/10W 5%	
R422	061G0603153 Y	RST CHIPR 15KOHM +-5% 1/10W YAGEO	
R421	061G0603153 Y	RST CHIPR 15KOHM +-5% 1/10W YAGEO	
R420	061G0603153 Y	RST CHIPR 15KOHM +-5% 1/10W YAGEO	
R419	061G0603153 Y	RST CHIPR 15KOHM +-5% 1/10W YAGEO	
R415	061G0603153 Y	RST CHIPR 15KOHM +-5% 1/10W YAGEO	
R408	061G0603153 Y	RST CHIPR 15KOHM +-5% 1/10W YAGEO	
R407	061G0603153 Y	RST CHIPR 15KOHM +-5% 1/10W YAGEO	
R401	061G0603153 Y	RST CHIPR 15KOHM +-5% 1/10W YAGEO	
R315	061G06032000FT	RST CHIP 200R 1/10W 1%	
R315	061G06032000FY	RST CHIPR 200 OHM +-1% 1/10W YAGEO	
R832	061G0603220 T	RST CHIP 22R 1/10W 5%	
R826	061G0603220 T	RST CHIP 22R 1/10W 5%	
R825	061G0603220 T	RST CHIP 22R 1/10W 5%	
R824	061G0603220 T	RST CHIP 22R 1/10W 5%	

英华家电维修资料软件专用 购买QQ:505966338

R823	061G0603220 T	RST CHIP 22R 1/10W 5%	
R822	061G0603220 T	RST CHIP 22R 1/10W 5%	
R821	061G0603220 T	RST CHIP 22R 1/10W 5%	
R820	061G0603220 T	RST CHIP 22R 1/10W 5%	
R819	061G0603220 T	RST CHIP 22R 1/10W 5%	
R814	061G0603220 T	RST CHIP 22R 1/10W 5%	
R813	061G0603220 T	RST CHIP 22R 1/10W 5%	
R520	061G0603220 T	RST CHIP 22R 1/10W 5%	
R826	061G0603220 Y	RST CHIPR 22 OHM +-5% 1/10W YAGEO	
R825	061G0603220 Y	RST CHIPR 22 OHM +-5% 1/10W YAGEO	
R824	061G0603220 Y	RST CHIPR 22 OHM +-5% 1/10W YAGEO	
R823	061G0603220 Y	RST CHIPR 22 OHM +-5% 1/10W YAGEO	
R822	061G0603220 Y	RST CHIPR 22 OHM +-5% 1/10W YAGEO	
R821	061G0603220 Y	RST CHIPR 22 OHM +-5% 1/10W YAGEO	
R820	061G0603220 Y	RST CHIPR 22 OHM +-5% 1/10W YAGEO	
R819	061G0603220 Y	RST CHIPR 22 OHM +-5% 1/10W YAGEO	
R814	061G0603220 Y	RST CHIPR 22 OHM +-5% 1/10W YAGEO	
R813	061G0603220 Y	RST CHIPR 22 OHM +-5% 1/10W YAGEO	
R520	061G0603220 Y	RST CHIPR 22 OHM +-5% 1/10W YAGEO	
R832	061G0603220 Y	RST CHIPR 22 OHM +-5% 1/10W YAGEO	
R404	061G0603223 T	RST CHIP 22K 1/10W 5%	
R413	061G0603223 T	RST CHIP 22K 1/10W 5%	
R701	061G0603223 T	RST CHIP 22K 1/10W 5%	
R707	061G0603223 T	RST CHIP 22K 1/10W 5%	
R404	061G0603223 Y	RST CHIPR 22KOHM +-5% 1/10W YAGEO	
R413	061G0603223 Y	RST CHIPR 22KOHM +-5% 1/10W YAGEO	
R701	061G0603223 Y	RST CHIPR 22KOHM +-5% 1/10W YAGEO	
R707	061G0603223 Y	RST CHIPR 22KOHM +-5% 1/10W YAGEO	
R507	061G0603229 T	RST CHIP 2R2 1/10W 5%	
R507	061G0603229 Y	RST CHIPR 2.2 OHM +-5% 1/10W YAGEO	
R304	061G06032701FT	RST CHIP 2K7 1/10W 1%	
R304	061G06032701FY	RST CHIPR 2.7KOHM +-1% 1/10W YAGEO	
R835	061G0603271 T	RST CHIP 270R 1/10W 5%	
R836	061G0603271 T	RST CHIP 270R 1/10W 5%	
R835	061G0603271 Y	RST CHIPR 270 OHM +-5% 1/10W YAGEO	
R836	061G0603271 Y	RST CHIPR 270 OHM +-5% 1/10W YAGEO	
R817	061G0603331 T	RST CHIP 330R 1/10W 5%	
R816	061G0603331 T	RST CHIP 330R 1/10W 5%	
R816	061G0603331 Y	RST CHIPR 330 OHM +-5% 1/10W YAGEO	
R817	061G0603331 Y	RST CHIPR 330 OHM +-5% 1/10W YAGEO	
R426	061G0603363 T	RST CHIP 36K 1/10W 5%	
R426	061G0603363 Y	RST CHIP 36K 1/10W 5%	
R838	061G0603390 JT	RST CHIP 39R 1/10W 5% TZAI YUAN	
R833	061G0603390 JT	RST CHIP 39R 1/10W 5% TZAI YUAN	
R833	061G0603390 JY	RST CHIPR 39R +-5% 1/10W YAGEO	
R838	061G0603390 JY	RST CHIPR 39R +-5% 1/10W YAGEO	
R851	061G0603470 T	RST CHIP 47R 1/10W 5%	

英华家电维修资料软件专用 购买QQ:505966338

R852	061G0603470 T	RST CHIP 47R 1/10W 5%	
R853	061G0603470 T	RST CHIP 47R 1/10W 5%	
R991	061G0603470 T	RST CHIP 47R 1/10W 5%	
R992	061G0603470 T	RST CHIP 47R 1/10W 5%	
R993	061G0603470 T	RST CHIP 47R 1/10W 5%	
R994	061G0603470 T	RST CHIP 47R 1/10W 5%	
R995	061G0603470 T	RST CHIP 47R 1/10W 5%	
R996	061G0603470 T	RST CHIP 47R 1/10W 5%	
R997	061G0603470 T	RST CHIP 47R 1/10W 5%	
R850	061G0603470 T	RST CHIP 47R 1/10W 5%	
R849	061G0603470 T	RST CHIP 47R 1/10W 5%	
R848	061G0603470 T	RST CHIP 47R 1/10W 5%	
R847	061G0603470 T	RST CHIP 47R 1/10W 5%	
R846	061G0603470 T	RST CHIP 47R 1/10W 5%	
R609	061G0603470 T	RST CHIP 47R 1/10W 5%	
R608	061G0603470 T	RST CHIP 47R 1/10W 5%	
R607	061G0603470 T	RST CHIP 47R 1/10W 5%	
R606	061G0603470 T	RST CHIP 47R 1/10W 5%	
R605	061G0603470 T	RST CHIP 47R 1/10W 5%	
R603	061G0603470 T	RST CHIP 47R 1/10W 5%	
R603	061G0603470 Y	RST CHIPR 47 OHM +-5% 1/10W YAGEO	
R605	061G0603470 Y	RST CHIPR 47 OHM +-5% 1/10W YAGEO	
R606	061G0603470 Y	RST CHIPR 47 OHM +-5% 1/10W YAGEO	
R607	061G0603470 Y	RST CHIPR 47 OHM +-5% 1/10W YAGEO	
R608	061G0603470 Y	RST CHIPR 47 OHM +-5% 1/10W YAGEO	
R609	061G0603470 Y	RST CHIPR 47 OHM +-5% 1/10W YAGEO	
R846	061G0603470 Y	RST CHIPR 47 OHM +-5% 1/10W YAGEO	
R847	061G0603470 Y	RST CHIPR 47 OHM +-5% 1/10W YAGEO	
R848	061G0603470 Y	RST CHIPR 47 OHM +-5% 1/10W YAGEO	
R849	061G0603470 Y	RST CHIPR 47 OHM +-5% 1/10W YAGEO	
R850	061G0603470 Y	RST CHIPR 47 OHM +-5% 1/10W YAGEO	
R851	061G0603470 Y	RST CHIPR 47 OHM +-5% 1/10W YAGEO	
R852	061G0603470 Y	RST CHIPR 47 OHM +-5% 1/10W YAGEO	
R853	061G0603470 Y	RST CHIPR 47 OHM +-5% 1/10W YAGEO	
R991	061G0603470 Y	RST CHIPR 47 OHM +-5% 1/10W YAGEO	
R992	061G0603470 Y	RST CHIPR 47 OHM +-5% 1/10W YAGEO	
R993	061G0603470 Y	RST CHIPR 47 OHM +-5% 1/10W YAGEO	
R994	061G0603470 Y	RST CHIPR 47 OHM +-5% 1/10W YAGEO	
R995	061G0603470 Y	RST CHIPR 47 OHM +-5% 1/10W YAGEO	
R996	061G0603470 Y	RST CHIPR 47 OHM +-5% 1/10W YAGEO	
R997	061G0603470 Y	RST CHIPR 47 OHM +-5% 1/10W YAGEO	
R999	061G0603472 T	RST CHIP 4K7 1/10W 5%	
R990	061G0603472 T	RST CHIP 4K7 1/10W 5%	
R989	061G0603472 T	RST CHIP 4K7 1/10W 5%	
R841	061G0603472 T	RST CHIP 4K7 1/10W 5%	
R611	061G0603472 T	RST CHIP 4K7 1/10W 5%	
R610	061G0603472 T	RST CHIP 4K7 1/10W 5%	

英华家电维修资料软件专用 购买QQ:505966338

R538	061G0603472 T	RST CHIP 4K7 1/10W 5%	
R537	061G0603472 T	RST CHIP 4K7 1/10W 5%	
R536	061G0603472 T	RST CHIP 4K7 1/10W 5%	
R530	061G0603472 T	RST CHIP 4K7 1/10W 5%	
R527	061G0603472 T	RST CHIP 4K7 1/10W 5%	
R526	061G0603472 T	RST CHIP 4K7 1/10W 5%	
R524	061G0603472 T	RST CHIP 4K7 1/10W 5%	
R523	061G0603472 T	RST CHIP 4K7 1/10W 5%	
R521	061G0603472 T	RST CHIP 4K7 1/10W 5%	
R516	061G0603472 T	RST CHIP 4K7 1/10W 5%	
R514	061G0603472 T	RST CHIP 4K7 1/10W 5%	
R425	061G0603472 T	RST CHIP 4K7 1/10W 5%	
R424	061G0603472 T	RST CHIP 4K7 1/10W 5%	
R424	061G0603472 Y	RST CHIPR 4.7KOHM +-5% 1/10W YAGEO	
R425	061G0603472 Y	RST CHIPR 4.7KOHM +-5% 1/10W YAGEO	
R999	061G0603472 Y	RST CHIPR 4.7KOHM +-5% 1/10W YAGEO	
R990	061G0603472 Y	RST CHIPR 4.7KOHM +-5% 1/10W YAGEO	
R989	061G0603472 Y	RST CHIPR 4.7KOHM +-5% 1/10W YAGEO	
R841	061G0603472 Y	RST CHIPR 4.7KOHM +-5% 1/10W YAGEO	
R611	061G0603472 Y	RST CHIPR 4.7KOHM +-5% 1/10W YAGEO	
R610	061G0603472 Y	RST CHIPR 4.7KOHM +-5% 1/10W YAGEO	
R538	061G0603472 Y	RST CHIPR 4.7KOHM +-5% 1/10W YAGEO	
R537	061G0603472 Y	RST CHIPR 4.7KOHM +-5% 1/10W YAGEO	
R536	061G0603472 Y	RST CHIPR 4.7KOHM +-5% 1/10W YAGEO	
R514	061G0603472 Y	RST CHIPR 4.7KOHM +-5% 1/10W YAGEO	
R516	061G0603472 Y	RST CHIPR 4.7KOHM +-5% 1/10W YAGEO	
R521	061G0603472 Y	RST CHIPR 4.7KOHM +-5% 1/10W YAGEO	
R523	061G0603472 Y	RST CHIPR 4.7KOHM +-5% 1/10W YAGEO	
R524	061G0603472 Y	RST CHIPR 4.7KOHM +-5% 1/10W YAGEO	
R526	061G0603472 Y	RST CHIPR 4.7KOHM +-5% 1/10W YAGEO	
R527	061G0603472 Y	RST CHIPR 4.7KOHM +-5% 1/10W YAGEO	
R530	061G0603472 Y	RST CHIPR 4.7KOHM +-5% 1/10W YAGEO	
R411	061G0603473 T	RST CHIP 47K 1/10W 5%	
R417	061G0603473 T	RST CHIP 47K 1/10W 5%	
R411	061G0603473 Y	RST CHIPR 47KOHM +-5% 1/10W YAGEO	
R417	061G0603473 Y	RST CHIPR 47KOHM +-5% 1/10W YAGEO	
R803	061G06034999FY	RST CHIPR 49.9 OHM +-1% 1/10W YAGEO	
R804	061G06034999FY	RST CHIPR 49.9 OHM +-1% 1/10W YAGEO	
R805	061G06034999FY	RST CHIPR 49.9 OHM +-1% 1/10W YAGEO	
R806	061G06034999FY	RST CHIPR 49.9 OHM +-1% 1/10W YAGEO	
R307	061G0603563 T	RST CHIP 56K 1/10W 5%	
R307	061G0603563 Y	RST CHIPR 56KOHM +-5% 1/10W YAGEO	
R416	061G06036800FT	RST CHIP 680R 1/10W 1%	
R416	061G06036800FY	RST CHIPR 680 OHM +-1% 1/10W YAGEO	
R506	061G06037509FT	RST CHIP 75R 1/10W 1%	
R504	061G06037509FT	RST CHIP 75R 1/10W 1%	
R503	061G06037509FT	RST CHIP 75R 1/10W 1%	

英华家电维修资料软件专用 购买QQ:505966338

R503	061G06037509FY	RST CHIPR 75 OHM +-1% 1/10W YAGEO	
R504	061G06037509FY	RST CHIPR 75 OHM +-1% 1/10W YAGEO	
R506	061G06037509FY	RST CHIPR 75 OHM +-1% 1/10W YAGEO	
R501	061G06038209FY	RST CHIPR 82 OHM +-1% 1/10W YAGEO	
R309	061G0603822 T	RST CHIP 8K2 1/10W 5%	
R309	061G0603822 Y	RST CHIPR 8.2KOHM +-5% 1/10W YAGEO	
R818	061G0805000 T	RST CHIP MAX 0R05 1/8W	
R818	061G0805000 Y	RST CHIP MAX 0R05 1/8W YAGEO	
R305	061G0805229 T	RST CHIP 2R2 1/8W 5%	
RP992	061T 125470 8P	RST CHIP ARRAY 47R 1/16W 5% 8P4R	
RP991	061T 125470 8P	RST CHIP ARRAY 47R 1/16W 5% 8P4R	
RP616	061T 125470 8P	RST CHIP ARRAY 47R 1/16W 5% 8P4R	
RP615	061T 125470 8P	RST CHIP ARRAY 47R 1/16W 5% 8P4R	
RP614	061T 125470 8P	RST CHIP ARRAY 47R 1/16W 5% 8P4R	
RP613	061T 125470 8P	RST CHIP ARRAY 47R 1/16W 5% 8P4R	
RP612	061T 125470 8P	RST CHIP ARRAY 47R 1/16W 5% 8P4R	
RP610	061T 125470 8P	RST CHIP ARRAY 47R 1/16W 5% 8P4R	
RP608	061T 125470 8P	RST CHIP ARRAY 47R 1/16W 5% 8P4R	
RP607	061T 125470 8P	RST CHIP ARRAY 47R 1/16W 5% 8P4R	
RP606	061T 125470 8P	RST CHIP ARRAY 47R 1/16W 5% 8P4R	
RP605	061T 125470 8P	RST CHIP ARRAY 47R 1/16W 5% 8P4R	
RP604	061T 125470 8P	RST CHIP ARRAY 47R 1/16W 5% 8P4R	
RP603	061T 125470 8P	RST CHIP ARRAY 47R 1/16W 5% 8P4R	
RP602	061T 125470 8P	RST CHIP ARRAY 47R 1/16W 5% 8P4R	
RP601	061T 125470 8P	RST CHIP ARRAY 47R 1/16W 5% 8P4R	
R509	061T04024429FT	RST CHIP 44R2 1/16W 1%	
R509	061T04024429FY	RST CHIP 44R2 1/16W 1%	
R314	061T06031200FT	RST CHIP 120R 1/10W 1%	
R803	061T06034999FT	RST CHIP 49R9 1/10W 1%	
R804	061T06034999FT	RST CHIP 49R9 1/10W 1%	
R805	061T06034999FT	RST CHIP 49R9 1/10W 1%	
R806	061T06034999FT	RST CHIP 49R9 1/10W 1%	
R305	061T0805229 Y	RST CHIP 2R2 1/8W 5%	
C708	065G060310131J 3	CAP CHIP 0603 100P 50V NPO +/-5%	
C712	065G060310131J 3	CAP CHIP 0603 100P 50V NPO +/-5%	
C714	065G060310131J 3	CAP CHIP 0603 100P 50V NPO +/-5%	
C708	065G060310131J Y	CAP CHIP 0603 100P 50V NPO +/-5%	
C712	065G060310131J Y	CAP CHIP 0603 100P 50V NPO +/-5%	
C714	065G060310131J Y	CAP CHIP 0603 100P 50V NPO +/-5%	
C993	065G060310221J Y	CAP CHIP 0603 1N 25V NPO +/-5%	
C510	065G060310232K 3	CAP CHIP 0603 1000PF K 50V X7R	
C510	065G060310232K Y	CAP CHIP 0603 1N 50V X7R +/-10%	
C806	065G060310332K 3	CAP CHIP 0603 10N 50V X7R +/-10%	
C804	065G060310332K 3	CAP CHIP 0603 10N 50V X7R +/-10%	
C706	065G060310332K 3	CAP CHIP 0603 10N 50V X7R +/-10%	
C704	065G060310332K 3	CAP CHIP 0603 10N 50V X7R +/-10%	
C637	065G060310332K 3	CAP CHIP 0603 10N 50V X7R +/-10%	

英华家电维修资料软件专用 购买QQ:505966338

C505	065G060310332K	3	CAP CHIP 0603 10N 50V X7R +/-10%	
C505	065G060310332K	Y	CAP CHIP 0603 10N 50V X7R +/-10%	
C637	065G060310332K	Y	CAP CHIP 0603 10N 50V X7R +/-10%	
C704	065G060310332K	Y	CAP CHIP 0603 10N 50V X7R +/-10%	
C706	065G060310332K	Y	CAP CHIP 0603 10N 50V X7R +/-10%	
C804	065G060310332K	Y	CAP CHIP 0603 10N 50V X7R +/-10%	
C806	065G060310332K	Y	CAP CHIP 0603 10N 50V X7R +/-10%	
C426	065G060310437Z	3	CAP CHIP 0603 0.1UF Z 50V Y5V	
C424	065G060310437Z	3	CAP CHIP 0603 0.1UF Z 50V Y5V	
C423	065G060310437Z	3	CAP CHIP 0603 0.1UF Z 50V Y5V	
C422	065G060310437Z	3	CAP CHIP 0603 0.1UF Z 50V Y5V	
C522	065G060310437Z	3	CAP CHIP 0603 0.1UF Z 50V Y5V	
C523	065G060310437Z	3	CAP CHIP 0603 0.1UF Z 50V Y5V	
C524	065G060310437Z	3	CAP CHIP 0603 0.1UF Z 50V Y5V	
C525	065G060310437Z	3	CAP CHIP 0603 0.1UF Z 50V Y5V	
C526	065G060310437Z	3	CAP CHIP 0603 0.1UF Z 50V Y5V	
C527	065G060310437Z	3	CAP CHIP 0603 0.1UF Z 50V Y5V	
C528	065G060310437Z	3	CAP CHIP 0603 0.1UF Z 50V Y5V	
C429	065G060310437Z	3	CAP CHIP 0603 0.1UF Z 50V Y5V	
C501	065G060310437Z	3	CAP CHIP 0603 0.1UF Z 50V Y5V	
C502	065G060310437Z	3	CAP CHIP 0603 0.1UF Z 50V Y5V	
C503	065G060310437Z	3	CAP CHIP 0603 0.1UF Z 50V Y5V	
C506	065G060310437Z	3	CAP CHIP 0603 0.1UF Z 50V Y5V	
C514	065G060310437Z	3	CAP CHIP 0603 0.1UF Z 50V Y5V	
C515	065G060310437Z	3	CAP CHIP 0603 0.1UF Z 50V Y5V	
C516	065G060310437Z	3	CAP CHIP 0603 0.1UF Z 50V Y5V	
C517	065G060310437Z	3	CAP CHIP 0603 0.1UF Z 50V Y5V	
C518	065G060310437Z	3	CAP CHIP 0603 0.1UF Z 50V Y5V	
C519	065G060310437Z	3	CAP CHIP 0603 0.1UF Z 50V Y5V	
C520	065G060310437Z	3	CAP CHIP 0603 0.1UF Z 50V Y5V	
C608	065G060310437Z	3	CAP CHIP 0603 0.1UF Z 50V Y5V	
C609	065G060310437Z	3	CAP CHIP 0603 0.1UF Z 50V Y5V	
C610	065G060310437Z	3	CAP CHIP 0603 0.1UF Z 50V Y5V	
C611	065G060310437Z	3	CAP CHIP 0603 0.1UF Z 50V Y5V	
C612	065G060310437Z	3	CAP CHIP 0603 0.1UF Z 50V Y5V	
C613	065G060310437Z	3	CAP CHIP 0603 0.1UF Z 50V Y5V	
C614	065G060310437Z	3	CAP CHIP 0603 0.1UF Z 50V Y5V	
C617	065G060310437Z	3	CAP CHIP 0603 0.1UF Z 50V Y5V	
C709	065G060310437Z	3	CAP CHIP 0603 0.1UF Z 50V Y5V	
C710	065G060310437Z	3	CAP CHIP 0603 0.1UF Z 50V Y5V	
C810	065G060310437Z	3	CAP CHIP 0603 0.1UF Z 50V Y5V	
C813	065G060310437Z	3	CAP CHIP 0603 0.1UF Z 50V Y5V	
C815	065G060310437Z	3	CAP CHIP 0603 0.1UF Z 50V Y5V	
C817	065G060310437Z	3	CAP CHIP 0603 0.1UF Z 50V Y5V	
C820	065G060310437Z	3	CAP CHIP 0603 0.1UF Z 50V Y5V	
C821	065G060310437Z	3	CAP CHIP 0603 0.1UF Z 50V Y5V	
C822	065G060310437Z	3	CAP CHIP 0603 0.1UF Z 50V Y5V	

英华家电维修资料软件专用 购买QQ:505966338

C991	065G060310437Z	3	CAP CHIP 0603 0.1UF Z 50V Y5V	
C992	065G060310437Z	3	CAP CHIP 0603 0.1UF Z 50V Y5V	
C999	065G060310437Z	3	CAP CHIP 0603 0.1UF Z 50V Y5V	
C607	065G060310437Z	3	CAP CHIP 0603 0.1UF Z 50V Y5V	
C529	065G060310437Z	3	CAP CHIP 0603 0.1UF Z 50V Y5V	
C530	065G060310437Z	3	CAP CHIP 0603 0.1UF Z 50V Y5V	
C531	065G060310437Z	3	CAP CHIP 0603 0.1UF Z 50V Y5V	
C532	065G060310437Z	3	CAP CHIP 0603 0.1UF Z 50V Y5V	
C534	065G060310437Z	3	CAP CHIP 0603 0.1UF Z 50V Y5V	
C535	065G060310437Z	3	CAP CHIP 0603 0.1UF Z 50V Y5V	
C536	065G060310437Z	3	CAP CHIP 0603 0.1UF Z 50V Y5V	
C537	065G060310437Z	3	CAP CHIP 0603 0.1UF Z 50V Y5V	
C542	065G060310437Z	3	CAP CHIP 0603 0.1UF Z 50V Y5V	
C543	065G060310437Z	3	CAP CHIP 0603 0.1UF Z 50V Y5V	
C544	065G060310437Z	3	CAP CHIP 0603 0.1UF Z 50V Y5V	
C545	065G060310437Z	3	CAP CHIP 0603 0.1UF Z 50V Y5V	
C548	065G060310437Z	3	CAP CHIP 0603 0.1UF Z 50V Y5V	
C549	065G060310437Z	3	CAP CHIP 0603 0.1UF Z 50V Y5V	
C601	065G060310437Z	3	CAP CHIP 0603 0.1UF Z 50V Y5V	
C602	065G060310437Z	3	CAP CHIP 0603 0.1UF Z 50V Y5V	
C603	065G060310437Z	3	CAP CHIP 0603 0.1UF Z 50V Y5V	
C604	065G060310437Z	3	CAP CHIP 0603 0.1UF Z 50V Y5V	
C605	065G060310437Z	3	CAP CHIP 0603 0.1UF Z 50V Y5V	
C606	065G060310437Z	3	CAP CHIP 0603 0.1UF Z 50V Y5V	
C305	065G060310437Z	3	CAP CHIP 0603 0.1UF Z 50V Y5V	
C310	065G060310437Z	3	CAP CHIP 0603 0.1UF Z 50V Y5V	
C318	065G060310437Z	3	CAP CHIP 0603 0.1UF Z 50V Y5V	
C320	065G060310437Z	3	CAP CHIP 0603 0.1UF Z 50V Y5V	
C404	065G060310437Z	3	CAP CHIP 0603 0.1UF Z 50V Y5V	
C406	065G060310437Z	3	CAP CHIP 0603 0.1UF Z 50V Y5V	
C407	065G060310437Z	3	CAP CHIP 0603 0.1UF Z 50V Y5V	
C408	065G060310437Z	3	CAP CHIP 0603 0.1UF Z 50V Y5V	
C420	065G060310437Z	3	CAP CHIP 0603 0.1UF Z 50V Y5V	
C417	065G060310437Z	3	CAP CHIP 0603 0.1UF Z 50V Y5V	
C416	065G060310437Z	3	CAP CHIP 0603 0.1UF Z 50V Y5V	
C415	065G060310437Z	3	CAP CHIP 0603 0.1UF Z 50V Y5V	
C414	065G060310437Z	3	CAP CHIP 0603 0.1UF Z 50V Y5V	
C411	065G060310437Z	3	CAP CHIP 0603 0.1UF Z 50V Y5V	
C410	065G060310437Z	3	CAP CHIP 0603 0.1UF Z 50V Y5V	
C409	065G060310437Z	3	CAP CHIP 0603 0.1UF Z 50V Y5V	
C529	065G060310437Z	Y	CAP CHIP 0603 100N 50V Y5V -20%+80%	
C528	065G060310437Z	Y	CAP CHIP 0603 100N 50V Y5V -20%+80%	
C527	065G060310437Z	Y	CAP CHIP 0603 100N 50V Y5V -20%+80%	
C526	065G060310437Z	Y	CAP CHIP 0603 100N 50V Y5V -20%+80%	
C525	065G060310437Z	Y	CAP CHIP 0603 100N 50V Y5V -20%+80%	
C524	065G060310437Z	Y	CAP CHIP 0603 100N 50V Y5V -20%+80%	
C523	065G060310437Z	Y	CAP CHIP 0603 100N 50V Y5V -20%+80%	

英华家电维修资料软件专用 购买QQ:505966338

C522	065G060310437Z	Y	CAP CHIP 0603 100N 50V Y5V -20%+80%	
C530	065G060310437Z	Y	CAP CHIP 0603 100N 50V Y5V -20%+80%	
C531	065G060310437Z	Y	CAP CHIP 0603 100N 50V Y5V -20%+80%	
C532	065G060310437Z	Y	CAP CHIP 0603 100N 50V Y5V -20%+80%	
C534	065G060310437Z	Y	CAP CHIP 0603 100N 50V Y5V -20%+80%	
C535	065G060310437Z	Y	CAP CHIP 0603 100N 50V Y5V -20%+80%	
C536	065G060310437Z	Y	CAP CHIP 0603 100N 50V Y5V -20%+80%	
C537	065G060310437Z	Y	CAP CHIP 0603 100N 50V Y5V -20%+80%	
C542	065G060310437Z	Y	CAP CHIP 0603 100N 50V Y5V -20%+80%	
C422	065G060310437Z	Y	CAP CHIP 0603 100N 50V Y5V -20%+80%	
C423	065G060310437Z	Y	CAP CHIP 0603 100N 50V Y5V -20%+80%	
C424	065G060310437Z	Y	CAP CHIP 0603 100N 50V Y5V -20%+80%	
C426	065G060310437Z	Y	CAP CHIP 0603 100N 50V Y5V -20%+80%	
C429	065G060310437Z	Y	CAP CHIP 0603 100N 50V Y5V -20%+80%	
C501	065G060310437Z	Y	CAP CHIP 0603 100N 50V Y5V -20%+80%	
C502	065G060310437Z	Y	CAP CHIP 0603 100N 50V Y5V -20%+80%	
C503	065G060310437Z	Y	CAP CHIP 0603 100N 50V Y5V -20%+80%	
C506	065G060310437Z	Y	CAP CHIP 0603 100N 50V Y5V -20%+80%	
C514	065G060310437Z	Y	CAP CHIP 0603 100N 50V Y5V -20%+80%	
C515	065G060310437Z	Y	CAP CHIP 0603 100N 50V Y5V -20%+80%	
C516	065G060310437Z	Y	CAP CHIP 0603 100N 50V Y5V -20%+80%	
C517	065G060310437Z	Y	CAP CHIP 0603 100N 50V Y5V -20%+80%	
C518	065G060310437Z	Y	CAP CHIP 0603 100N 50V Y5V -20%+80%	
C519	065G060310437Z	Y	CAP CHIP 0603 100N 50V Y5V -20%+80%	
C520	065G060310437Z	Y	CAP CHIP 0603 100N 50V Y5V -20%+80%	
C612	065G060310437Z	Y	CAP CHIP 0603 100N 50V Y5V -20%+80%	
C613	065G060310437Z	Y	CAP CHIP 0603 100N 50V Y5V -20%+80%	
C614	065G060310437Z	Y	CAP CHIP 0603 100N 50V Y5V -20%+80%	
C617	065G060310437Z	Y	CAP CHIP 0603 100N 50V Y5V -20%+80%	
C709	065G060310437Z	Y	CAP CHIP 0603 100N 50V Y5V -20%+80%	
C710	065G060310437Z	Y	CAP CHIP 0603 100N 50V Y5V -20%+80%	
C810	065G060310437Z	Y	CAP CHIP 0603 100N 50V Y5V -20%+80%	
C813	065G060310437Z	Y	CAP CHIP 0603 100N 50V Y5V -20%+80%	
C815	065G060310437Z	Y	CAP CHIP 0603 100N 50V Y5V -20%+80%	
C817	065G060310437Z	Y	CAP CHIP 0603 100N 50V Y5V -20%+80%	
C820	065G060310437Z	Y	CAP CHIP 0603 100N 50V Y5V -20%+80%	
C821	065G060310437Z	Y	CAP CHIP 0603 100N 50V Y5V -20%+80%	
C822	065G060310437Z	Y	CAP CHIP 0603 100N 50V Y5V -20%+80%	
C991	065G060310437Z	Y	CAP CHIP 0603 100N 50V Y5V -20%+80%	
C992	065G060310437Z	Y	CAP CHIP 0603 100N 50V Y5V -20%+80%	
C999	065G060310437Z	Y	CAP CHIP 0603 100N 50V Y5V -20%+80%	
C543	065G060310437Z	Y	CAP CHIP 0603 100N 50V Y5V -20%+80%	
C544	065G060310437Z	Y	CAP CHIP 0603 100N 50V Y5V -20%+80%	
C545	065G060310437Z	Y	CAP CHIP 0603 100N 50V Y5V -20%+80%	
C548	065G060310437Z	Y	CAP CHIP 0603 100N 50V Y5V -20%+80%	
C549	065G060310437Z	Y	CAP CHIP 0603 100N 50V Y5V -20%+80%	
C601	065G060310437Z	Y	CAP CHIP 0603 100N 50V Y5V -20%+80%	

英华家电维修资料软件专用 购买QQ:505966338

C602	065G060310437Z	Y	CAP CHIP 0603 100N 50V Y5V -20%+80%	
C603	065G060310437Z	Y	CAP CHIP 0603 100N 50V Y5V -20%+80%	
C604	065G060310437Z	Y	CAP CHIP 0603 100N 50V Y5V -20%+80%	
C605	065G060310437Z	Y	CAP CHIP 0603 100N 50V Y5V -20%+80%	
C606	065G060310437Z	Y	CAP CHIP 0603 100N 50V Y5V -20%+80%	
C607	065G060310437Z	Y	CAP CHIP 0603 100N 50V Y5V -20%+80%	
C608	065G060310437Z	Y	CAP CHIP 0603 100N 50V Y5V -20%+80%	
C609	065G060310437Z	Y	CAP CHIP 0603 100N 50V Y5V -20%+80%	
C610	065G060310437Z	Y	CAP CHIP 0603 100N 50V Y5V -20%+80%	
C611	065G060310437Z	Y	CAP CHIP 0603 100N 50V Y5V -20%+80%	
C305	065G060310437Z	Y	CAP CHIP 0603 100N 50V Y5V -20%+80%	
C310	065G060310437Z	Y	CAP CHIP 0603 100N 50V Y5V -20%+80%	
C318	065G060310437Z	Y	CAP CHIP 0603 100N 50V Y5V -20%+80%	
C320	065G060310437Z	Y	CAP CHIP 0603 100N 50V Y5V -20%+80%	
C404	065G060310437Z	Y	CAP CHIP 0603 100N 50V Y5V -20%+80%	
C406	065G060310437Z	Y	CAP CHIP 0603 100N 50V Y5V -20%+80%	
C407	065G060310437Z	Y	CAP CHIP 0603 100N 50V Y5V -20%+80%	
C408	065G060310437Z	Y	CAP CHIP 0603 100N 50V Y5V -20%+80%	
C420	065G060310437Z	Y	CAP CHIP 0603 100N 50V Y5V -20%+80%	
C417	065G060310437Z	Y	CAP CHIP 0603 100N 50V Y5V -20%+80%	
C416	065G060310437Z	Y	CAP CHIP 0603 100N 50V Y5V -20%+80%	
C415	065G060310437Z	Y	CAP CHIP 0603 100N 50V Y5V -20%+80%	
C414	065G060310437Z	Y	CAP CHIP 0603 100N 50V Y5V -20%+80%	
C411	065G060310437Z	Y	CAP CHIP 0603 100N 50V Y5V -20%+80%	
C410	065G060310437Z	Y	CAP CHIP 0603 100N 50V Y5V -20%+80%	
C409	065G060310437Z	Y	CAP CHIP 0603 100N 50V Y5V -20%+80%	
C636	065G060310512K	T	CAP CHIP 0603 1UF K 16V X7R	
C636	065G060310512K	T	CAP CHIP 0603 1UF K 16V X7R	
C902	065G060312031J	Y	CAP CHIP 0603 12P 50V NPO +/-5%	
C901	065G060312031J	Y	CAP CHIP 0603 12P 50V NPO +/-5%	
C900	065G060312031J	Y	CAP CHIP 0603 12P 50V NPO +/-5%	
C808	065G060312031J	Y	CAP CHIP 0603 12P 50V NPO +/-5%	
C812	065G060318031J	Y	CAP CHIP 0603 18P 50V NPO +/-5%	
C811	065G060318031J	Y	CAP CHIP 0603 18P 50V NPO +/-5%	
C313	065G060322131J	3	CAP CHIP 0603 220PF J 50V NPO	
C313	065G060322131J	Y	CAP CHIP 0603 220P 50V NPO +/-5%	
C311	065G060322232K	3	CAP CHIP 0603 2200PF K 50V X7R	
C311	065G060322232K	Y	CAP CHIP 0603 2N2 50V X7R +/-10%	
C803	065G060322332K	Y	CAP CHIP 0603 22N 50V X7R +/-10%	
C303	065G060322412K	3	CAP CHIP 0603 220N 16V X7R +/-10%	
C303	065G060322412K	Y	CAP CHIP 0603 220N 16V X7R 10%	
C511	065G060327031J	3	CAP CHIP 0603 27PF 50V NPO +/-5%	
C512	065G060327031J	3	CAP CHIP 0603 27PF 50V NPO +/-5%	
C511	065G060327031J	Y	CAP CHIP 0603 27P 50V NPO +/-5%	
C512	065G060327031J	Y	CAP CHIP 0603 27P 50V NPO +/-5%	
C419	065G060330031J	3	CAP CHIP 0603 30PF 50V NPO +/-5%	
C418	065G060330031J	3	CAP CHIP 0603 30PF 50V NPO +/-5%	

英华家电维修资料软件专用 购买QQ:505966338

C418	065G060330031J	Y	CAP CHIP 0603 30PF J 50V NPO
C419	065G060330031J	Y	CAP CHIP 0603 30PF J 50V NPO
C307	065G060333312K	3	CAP CHIP 0603 33N 16V X7R +/-10%
C307	065G060333312K	Y	CAP CHIP 0603 33N 16V X7R +/-10%
C308	065G060347031J	Y	CAP CHIP 0603 47P 50V NPO +/-5%
C306	065G060347031J	Y	CAP CHIP 0603 47P 50V NPO +/-5%
C413	065G060347931C	3	CAP CHIP 0603 4P7 50V NPO +/-0.25PF
C405	065G060347931C	3	CAP CHIP 0603 4P7 50V NPO +/-0.25PF
C403	065G060347931C	3	CAP CHIP 0603 4P7 50V NPO +/-0.25PF
C401	065G060347931C	3	CAP CHIP 0603 4P7 50V NPO +/-0.25PF
C401	065G060347931C	Y	CAP CHIP 0603 4P7 50V NPO +/-0.25PF
C403	065G060347931C	Y	CAP CHIP 0603 4P7 50V NPO +/-0.25PF
C405	065G060347931C	Y	CAP CHIP 0603 4P7 50V NPO +/-0.25PF
C413	065G060347931C	Y	CAP CHIP 0603 4P7 50V NPO +/-0.25PF
C998	065G0805106A5K	3	CHIP 10UF 10V X5R 10%
C819	065G0805106A5K	3	CHIP 10UF 10V X5R 10%
C816	065G0805106A5K	3	CHIP 10UF 10V X5R 10%
C814	065G0805106A5K	3	CHIP 10UF 10V X5R 10%
C618	065G0805106A5K	3	CHIP 10UF 10V X5R 10%
C547	065G0805106A5K	3	CHIP 10UF 10V X5R 10%
C541	065G0805106A5K	3	CHIP 10UF 10V X5R 10%
C540	065G0805106A5K	3	CHIP 10UF 10V X5R 10%
C539	065G0805106A5K	3	CHIP 10UF 10V X5R 10%
C521	065G0805106A5K	3	CHIP 10UF 10V X5R 10%
C513	065G0805106A5K	3	CHIP 10UF 10V X5R 10%
C507	065G0805106A5K	3	CHIP 10UF 10V X5R 10%
C504	065G0805106A5K	3	CHIP 10UF 10V X5R 10%
C428	065G0805106A5K	3	CHIP 10UF 10V X5R 10%
C427	065G0805106A5K	3	CHIP 10UF 10V X5R 10%
C425	065G0805106A5K	3	CHIP 10UF 10V X5R 10%
C421	065G0805106A5K	3	CHIP 10UF 10V X5R 10%
C319	065G0805106A5K	3	CHIP 10UF 10V X5R 10%
C302	065G0805106A5K	3	CHIP 10UF 10V X5R 10%
C301	065G0805106A5K	3	CHIP 10UF 10V X5R 10%
C998	065G0805106A5K	T	CHIP 10UF 10V X5R 0805
C819	065G0805106A5K	T	CHIP 10UF 10V X5R 0805
C816	065G0805106A5K	T	CHIP 10UF 10V X5R 0805
C814	065G0805106A5K	T	CHIP 10UF 10V X5R 0805
C618	065G0805106A5K	T	CHIP 10UF 10V X5R 0805
C547	065G0805106A5K	T	CHIP 10UF 10V X5R 0805
C541	065G0805106A5K	T	CHIP 10UF 10V X5R 0805
C540	065G0805106A5K	T	CHIP 10UF 10V X5R 0805
C539	065G0805106A5K	T	CHIP 10UF 10V X5R 0805
C521	065G0805106A5K	T	CHIP 10UF 10V X5R 0805
C513	065G0805106A5K	T	CHIP 10UF 10V X5R 0805
C507	065G0805106A5K	T	CHIP 10UF 10V X5R 0805
C504	065G0805106A5K	T	CHIP 10UF 10V X5R 0805

英华家电维修资料软件专用 购买QQ:505966338

C428	065G0805106A5K T	CHIP 10UF 10V X5R 0805	
C427	065G0805106A5K T	CHIP 10UF 10V X5R 0805	
C425	065G0805106A5K T	CHIP 10UF 10V X5R 0805	
C421	065G0805106A5K T	CHIP 10UF 10V X5R 0805	
C319	065G0805106A5K T	CHIP 10UF 10V X5R 0805	
C302	065G0805106A5K T	CHIP 10UF 10V X5R 0805	
C301	065G0805106A5K T	CHIP 10UF 10V X5R 0805	
C998	065G0805106A5K Y	CHIP 10UF 10V X5R 0805(T:1.25+/-0.2MM)	
C819	065G0805106A5K Y	CHIP 10UF 10V X5R 0805(T:1.25+/-0.2MM)	
C816	065G0805106A5K Y	CHIP 10UF 10V X5R 0805(T:1.25+/-0.2MM)	
C814	065G0805106A5K Y	CHIP 10UF 10V X5R 0805(T:1.25+/-0.2MM)	
C618	065G0805106A5K Y	CHIP 10UF 10V X5R 0805(T:1.25+/-0.2MM)	
C547	065G0805106A5K Y	CHIP 10UF 10V X5R 0805(T:1.25+/-0.2MM)	
C541	065G0805106A5K Y	CHIP 10UF 10V X5R 0805(T:1.25+/-0.2MM)	
C540	065G0805106A5K Y	CHIP 10UF 10V X5R 0805(T:1.25+/-0.2MM)	
C539	065G0805106A5K Y	CHIP 10UF 10V X5R 0805(T:1.25+/-0.2MM)	
C521	065G0805106A5K Y	CHIP 10UF 10V X5R 0805(T:1.25+/-0.2MM)	
C513	065G0805106A5K Y	CHIP 10UF 10V X5R 0805(T:1.25+/-0.2MM)	
C507	065G0805106A5K Y	CHIP 10UF 10V X5R 0805(T:1.25+/-0.2MM)	
C504	065G0805106A5K Y	CHIP 10UF 10V X5R 0805(T:1.25+/-0.2MM)	
C428	065G0805106A5K Y	CHIP 10UF 10V X5R 0805(T:1.25+/-0.2MM)	
C427	065G0805106A5K Y	CHIP 10UF 10V X5R 0805(T:1.25+/-0.2MM)	
C425	065G0805106A5K Y	CHIP 10UF 10V X5R 0805(T:1.25+/-0.2MM)	
C421	065G0805106A5K Y	CHIP 10UF 10V X5R 0805(T:1.25+/-0.2MM)	
C319	065G0805106A5K Y	CHIP 10UF 10V X5R 0805(T:1.25+/-0.2MM)	
C302	065G0805106A5K Y	CHIP 10UF 10V X5R 0805(T:1.25+/-0.2MM)	
C301	065G0805106A5K Y	CHIP 10UF 10V X5R 0805(T:1.25+/-0.2MM)	
C312	065G080533132K Y	CAP CHIP 0805 330PF K 50V X7R	
C809	065G080547505K Y	CAP CHIP 0805 4.7UF K 6.3V X5R	
C993	065T060310221J 3	CAP CHIP 0603 1N 25V NPO +/-5%	
C902	065T060312031J 3	CAP CHIP 0603 12PF J 50V NPO	
C901	065T060312031J 3	CAP CHIP 0603 12PF J 50V NPO	
C900	065T060312031J 3	CAP CHIP 0603 12PF J 50V NPO	
C808	065T060312031J 3	CAP CHIP 0603 12PF J 50V NPO	
C803	065T060322332K 3	CAP CHIP 0603 22NF K 50V X7R	
C308	065T060347031J 3	CAP CHIP 0603 47PF 50V NPO +/-5%	
C306	065T060347031J 3	CAP CHIP 0603 47PF 50V NPO +/-5%	
C805	065T0805335A5K 3	CAP CHIP 3U3 10V X5R +/- 10%	
C802	065T0805335A5K 3	CAP CHIP 3U3 10V X5R +/- 10%	
C805	065T0805335A5K T	CAP CHIP 0805 3.3UF K 10V X5R	
C802	065T0805335A5K T	CAP CHIP 0805 3.3UF K 10V X5R	
C809	065T080547505K 3	CHIP 4U7 6V3 X5R 10%	
C702	067G 3111003CT	EC SMD 10UF 16V HV 4X5.5MM	
C705	067G 3111003CT	EC SMD 10UF 16V HV 4X5.5MM	
C702	067T 3111003ET	EC SMD 10UF 16V VEJ 4X5.3MM	
C705	067T 3111003ET	EC SMD 10UF 16V VEJ 4X5.3MM	
FB302	071G 56121 TA	IND FXD 0805 EMI 100MHZ 120R R	

英华家电维修资料软件专用 购买QQ:505966338

FB402	071G 56121 TA	IND FXD 0805 EMI 100MHZ 120R R	
FB403	071G 56121 TA	IND FXD 0805 EMI 100MHZ 120R R	
FB303	071G 56K121 TA	CHIP BEAD 120R/6000MA HCB2012KF-121T60	
FB301	071G 59A121 TA	CHIP BEAD 120R/3000MA HCB1608KF-121T30	
FB401	071G 59A121 TA	CHIP BEAD 120R/3000MA HCB1608KF-121T30	
FB404	071G 59A121 TA	CHIP BEAD 120R/3000MA HCB1608KF-121T30	
FB501	071G 59A121 TA	CHIP BEAD 120R/3000MA HCB1608KF-121T30	
FB502	071G 59A121 TA	CHIP BEAD 120R/3000MA HCB1608KF-121T30	
FB503	071G 59A121 TA	CHIP BEAD 120R/3000MA HCB1608KF-121T30	
FB504	071G 59A121 TA	CHIP BEAD 120R/3000MA HCB1608KF-121T30	
FB505	071G 59A121 TA	CHIP BEAD 120R/3000MA HCB1608KF-121T30	
FB506	071G 59A121 TA	CHIP BEAD 120R/3000MA HCB1608KF-121T30	
FB807	071G 59A121 TA	CHIP BEAD 120R/3000MA HCB1608KF-121T30	
FB806	071G 59A121 TA	CHIP BEAD 120R/3000MA HCB1608KF-121T30	
FB805	071G 59A121 TA	CHIP BEAD 120R/3000MA HCB1608KF-121T30	
FB804	071G 59A121 TA	CHIP BEAD 120R/3000MA HCB1608KF-121T30	
FB803	071G 59A121 TA	CHIP BEAD 120R/3000MA HCB1608KF-121T30	
FB802	071G 59A121 TA	CHIP BEAD 120R/3000MA HCB1608KF-121T30	
FB801	071G 59A121 TA	CHIP BEAD 120R/3000MA HCB1608KF-121T30	
FB601	071G 59A121 TA	CHIP BEAD 120R/3000MA HCB1608KF-121T30	
FB507	071G 59A121 TA	CHIP BEAD 120R/3000MA HCB1608KF-121T30	
FB709	071G 59K300 TA	CHIP BEAD 0603 30R/700MA TAI-TECH	
FB708	071G 59K300 TA	CHIP BEAD 0603 30R/700MA TAI-TECH	
FB707	071G 59K300 TA	CHIP BEAD 0603 30R/700MA TAI-TECH	
FB706	071G 59K300 TA	CHIP BEAD 0603 30R/700MA TAI-TECH	
FB705	071G 59K300 TA	CHIP BEAD 0603 30R/700MA TAI-TECH	
FB704	071G 59K300 TA	CHIP BEAD 0603 30R/700MA TAI-TECH	
FB702	071G 59K300 TA	CHIP BEAD 0603 30R/700MA TAI-TECH	
FB701	071G 59K300 TA	CHIP BEAD 0603 30R/700MA TAI-TECH	
FB703	071T 56300 TA	CHIP BEAD 30OHM 5000MA HCB2012KF-300T50	
L403	073T 63828 T	CHIP INDUCROR 0U82 10% MLF1608DR82K	
L403	073T 63828 TA	CHIP INDUCROR 0U82 10% FCI1608F-R82K	
D801	081G 63G 2 EL	CHIP LED GREEN 0603	
D802	081G 63G 2 EL	CHIP LED GREEN 0603	
D301	093G 6432V	LL4148-GSO8	
X401	093G 22S918 C	CRYSTAL 12MHZ 20P SMD-49	
X801	093G 22SA06 C	CRYSTAL 50MHZ 12P SMD-49	
ZD301	093G 60S801	DIODE SSA34 VISHAY	
D301	093G 64S522SEM	LL4148	
D301	093G 64S901 T	DIODE LS4148	
X501	093T 22S920 C	CRYSTAL 27MHZ 20P SMD-49	
	715G3459 E	IPTV-PCB FR-4 4-LAYER 150*90*1.6MM	
U503	056G1126903 L	IC AML7238+LICENCE	
	PWTV9QGGMSA7	POWER BOARD G3351-1-HV-X-2-090526	
	040G 45762412B	CBPC LABEL	
	009G6005 1 GP	GROUND TERMINAL	
CN802	033G3802 5B Y W	WEAFER	

英华家电维修资料软件专用 购买QQ:505966338

CN801	033G8029 3A	3PIN (2PIN NC)	
CN903	033T327812D	WAFER 12P PLUG	
IC909	056G 139 7 1	IC EL817MA M-TYPE	
IC907	056G 139 7 1	IC EL817MA M-TYPE	
IC905	056G 139 7 1	IC EL817MA M-TYPE	
IC901	056T 379121	IC STR- A6069H DIP-8	
Q905	057G 761 7	KTD1691P	
RV901	061G 46 17	VARISTOR 560V TNR14V561K	
RV901	061T 46906 W	VARISTOR 560V TVR14561KFC4FY	
R943	061T153M10852T	RST MOFR 0.1 OHM +-5% 3WS	
R945	061T153M10852T	RST MOFR 0.1 OHM +-5% 3WS	
C901	063G 10747410V	0.47UF 275VAC ARCO	
C904	063G 10747410V	0.47UF 275VAC ARCO	
C901	063G107K474 US	0.47UF +-10%	
C904	063G107K474 US	0.47UF +-10%	
C927	063G210K105BCN	MPP CAP 1UF 520V P=15MM	
C927	063G213J105GFA	MPF CAP	
C927	063T210K105HCJ	CAP MPH 1UF 1000V 10%	
C906	065G306K4712B3	Y1 CAP 470PF +-10% 250VAC CD SERIES	
C960	065G306K4712B3	Y1 CAP 470PF +-10% 250VAC CD SERIES	
C906	065G306K4712BM	Y1 CAP 470PF +-10% 250V AC KX	
C960	065G306K4712BM	Y1 CAP 470PF +-10% 250V AC KX	
C902	065G306K6812BM	Y1 CAP 680PF 10% 250VAC KX	
C903	065G306K6812BM	Y1 CAP 680PF 10% 250VAC KX	
C939	065G306M1022B3	Y1 CAP 1000PF M 250VAC TDK	
C939	065G306M1022BM	Y1.CAP.001UF 250VAC MURATA	
C929	067G 42Z10115K	EC 100UF M 450V 18*40MM	
C930	067G 42Z10115K	EC 100UF M 450V 18*40MM	
C919	067G215P1024KV	LOW ESR EC 1000UF M 25V 12.5*20MM	
C920	067G215P1024KV	LOW ESR EC 1000UF M 25V 12.5*20MM	
C911	067G215P1026KV	LOW ESR EC 1000UF M 35V 12.5*25MM	
C805	067G215P4714KV	LOW ESR EC 470UF M 25V 10*16MM	
C921	067G215P4714KV	LOW ESR EC 470UF M 25V 10*16MM	
C912	067G215P4716KV	LOW ESR EC 470UF M 35V 10*20MM	
C945	067G215S1023KV	EC CAP 105℃ 1000UF M 16V	
C946	067G215S1023KV	EC CAP 105℃ 1000UF M 16V	
C947	067G215S1023KV	EC CAP 105℃ 1000UF M 16V	
C947	067G215V102 3N	EC CAP 105 度 1000UF M 16V NCC	
C946	067G215V102 3N	EC CAP 105 度 1000UF M 16V NCC	
C945	067G215V102 3N	EC CAP 105 度 1000UF M 16V NCC	
C920	067G215V102 4N	EC CAP 105℃ 1000UF M 25V NCC	
C919	067G215V102 4N	EC CAP 105℃ 1000UF M 25V NCC	
C911	067G215V102 6N	EC 1000UF 35V KY35VB1000M-CC3 12.5*25MM	
C805	067G215V471 4N	470UF +-20% 25V	
C921	067G215V471 4N	470UF +-20% 25V	
C912	067G215V471 6N	CAP 105℃ 470UF M 35V	
L904	073G 174147 L	PFC CHOKE 800UH CC-011619	

英华家电维修资料软件专用 购买QQ:505966338

L907	073G 253 91 H	CHOKE COIL	
L906	073G 253 91 H	CHOKE COIL	
L905	073G 253 91 H	CHOKE COIL	
L801	073G 253 91 H	CHOKE COIL	
L801	073G 253 91 L	CHOKE BY LI TA	
L905	073G 253 91 L	CHOKE BY LI TA	
L906	073G 253 91 L	CHOKE BY LI TA	
L907	073G 253 91 L	CHOKE BY LI TA	
L901	073L 174 49 HG	LINE FILTER	
L903	073L 174 49 HG	LINE FILTER	
L901	073L 174 49 VG	LINE FILTER 20.0MH MIN	
L903	073L 174 49 VG	LINE FILTER 20.0MH MIN	
L901	073L 174 49LSG	LINE FILTER	
L903	073L 174 49LSG	LINE FILTER	
L902	073L 174 52 HG	LINE FILTER 2.0MH MIN	
L902	073L 174 52 LG	CHOKE COIL	
L902	073L 174 52 VG	LINE FILTER 2.0MH MIN	
T902	080GL42T 19 L	X'FMR 850UH PT-011164-1	
T902	080GL42T 19 N	X'FMR 850UH YUVA-1111	
T802	080GL42T 20 N	X'FMR 1.9MH YUVA-1141	
T802	080GL42T 20 YS	X'FMR 1.9MH YS04160231	
T803	080GL42T 21 N	X'FMR 5.5MH YUVA-1136	
T801	080GL42T 21 N	X'FMR 5.5MH YUVA-1136	
T801	080GL42T 21 YS	X'FMR 5.5MH YS04160234	
T803	080GL42T 21 YS	X'FMR 5.5MH YS04160234	
T901	080GL52T 5 L	X'FMR 1.0MH PT-009817	
T901	080GL52T 5 N	X'FMR 1.0MH YUVA-1068	
F901	084G 41 11 L	FUSE 5A 250V	
CN901	087G 501 47 S	AC SOCKET 2PIN + 2 SCREW HOLE	
CN901	087G 501 47 DL	AC SOCKET 2PIN + 3 SCREW HOLE	
D908	093G 52 70 1	1N5408-E(SHORT PIN) 3A/1000V DO-201AD	
D908	093G 5255L52T	DIDOE 1N5408-E3/73 3A/1000V DO-201AD	
	0Q1G 340 8106 CR3	SCREW	
	705TQ761021	NR901 ASS'Y	
NR901	061T 58030 WL	RST NTCR 3 OHM +-20% 5A THINKING	
	Q09T 203 8	PIN FOR NR901	
	705TQ857058	Q901 ASS'Y	
Q901	057G 667 21	STP10NK70ZFP	
	090G6084 1	HEAT SINK	
	0M1G1730 8120	SCREW	
	705TQ861013	NR902 ASS'Y	
NR902	061T 58030 WL	RST NTCR 3 OHM +-20% 5A THINKING	
	Q09T 203 8	PIN FOR NR901	
	705TQ893068	D901&D902 ASS'Y	
	012T 372 2	SILICON	
Q902	057G 667 25	STW20NM60	
D901	093G 220 33	DIODE FMXA-1106S	

英华家电维修资料软件专用 购买QQ:505966338

	0M1G1730 10120	SCREW 42A9930016	
	Q90T0096A01	HEAT SINK	
	705TQ893077	BD901 ASS'Y	
BD901	093G 50460 18	D10XB60	
BD901	093G 50460 49	BRIDGE KBJ1008G 10A/800V KBJ	
	0M1G1730 10120	SCREW 42A9930016	
	Q90G0001 2	HEAT SINK	
	705TQ957008	Q801 ASS'Y	
Q801	057G 667 49	FET 2SK4086LS 11.5A/600V TO-220FI(LS)	
Q801	057T 667 59	MOSFET FQPF12N60C 12A/600V TO-220F	
	090G6084 1	HEAT SINK	
	0M1G1730 8120	SCREW	
	705TQ957009	Q802 ASS'Y	
Q802	057G 667 49	FET 2SK4086LS 11.5A/600V TO-220FI(LS)	
Q802	057T 667 59	MOSFET FQPF12N60C 12A/600V TO-220F	
	090G6084 1	HEAT SINK	
	0M1G1730 8120	SCREW	
	705TQ957010	Q806 ASS'Y	
Q806	057G 667 49	FET 2SK4086LS 11.5A/600V TO-220FI(LS)	
Q806	057T 667 59	MOSFET FQPF12N60C 12A/600V TO-220F	
	090G6084 1	HEAT SINK	
	0M1G1730 8120	SCREW	
	705TQ957011	Q807 ASS'Y	
Q807	057G 667 49	FET 2SK4086LS 11.5A/600V TO-220FI(LS)	
Q807	057T 667 59	MOSFET FQPF12N60C 12A/600V TO-220F	
	090G6084 1	HEAT SINK	
	0M1G1730 8120	SCREW	
	705TQ993010	D904&D907 ASS'Y	
D907	093G 52 66	DIODE FMX-12SL 10A/200V TO-220	
D907	093G 52 69	DIODE YG902C2RSC 10A/200V TO-220F15	
D904	093G 60239	FME-210B T0-220	
D904	093G 60293	DIODE SBR20016JST 20A/160V TO-220ML(LS)	
	0M1G1730 8120	SCREW	
	Q90T0095 2	HEAT SINK	
	705TQ993011	D910 ASS'Y	
D910	093G 60240	YG802C06R TO-220F15	
D910	093G 60298	DIODE SBT15006JST 15A/60V TO-220ML(LS)	
D910	093G 60526	SCHOTTKY MBRF1060CT ITO-220AB	
	0M1G1730 8120	SCREW	
	Q90T0176 1	HEAT SINK	
IC904	056G 379104	IC ICE2PCS02G PG-DSO-8	
IC801	056T 379122	IC OZ9976GN-C-0-TR SOP-16	
IC902	056T 379133	IC LD7523A GS SOP-8	
Q907	057G 417 4	PMBS3904/PHILIPS-SMT(04)	
Q906	057G 417 4	PMBS3904/PHILIPS-SMT(04)	
Q805	057G 417 4	PMBS3904/PHILIPS-SMT(04)	
Q804	057G 417 4	PMBS3904/PHILIPS-SMT(04)	

英华家电维修资料软件专用 购买QQ:505966338

Q811	057G 417 20 T	TRA SST2907A SST3 ROHM	
Q810	057G 417 20 T	TRA SST2907A SST3 ROHM	
Q808	057G 417 20 T	TRA SST2907A SST3 ROHM	
Q809	057G 417 20 T	TRA SST2907A SST3 ROHM	
Q813	057G 759 2	RK7002FD5T116 SOT-23 BY ROHM	
Q812	057G 759 2	RK7002FD5T116 SOT-23 BY ROHM	
Q803	057G 759 2	RK7002FD5T116 SOT-23 BY ROHM	
Q903	057G 760 5	DTC144WKA BY ROHM SMT	
R820	061G0603104	RST CHIPR 100 KOHM +-5% 1/10W	
R849	061G0603104	RST CHIPR 100 KOHM +-5% 1/10W	
R829	061G0603105	RST CHIPR 1M OHM +-5% 1/10W	
R831	061G0603105	RST CHIPR 1M OHM +-5% 1/10W	
R851	061G0603106	RST CHIPR 10M OHM +-5% 1/10W	
R812	061G0603184	RST CHIPR 180 KOHM +-5% 1/10W	
R822	061G0603220 0F	RST CHIPR 220 OHM +-1% 1/10W	
R825	061G0603220 0F	RST CHIPR 220 OHM +-1% 1/10W	
R807	061G0603330 3F	RST CHIPR 330KOHM +-1% 1/10W	
R828	061G0603683	RST CHIPR 68K OHM +-5% 1/10W	
R830	061G0603683	RST CHIPR 68K OHM +-5% 1/10W	
R848	061G0603823	RST CHIPR 82 KOHM +-5% 1/10W	
R839	061G0805100	RST CHIPR 10 OHM +-5% 1/8W	
R840	061G0805100	RST CHIPR 10 OHM +-5% 1/8W	
R841	061G0805100	RST CHIPR 10 OHM +-5% 1/8W	
R842	061G0805100	RST CHIPR 10 OHM +-5% 1/8W	
R957	061G0805100 2F	RST CHIPR 10KOHM +-1% 1/8W	
R944	061G0805101	1ST CHIPR 100 OHM +-5% 1/8W	
R920	061G0805102	RST CHIPR 1K OHM +-5% 1/8W	
R979	061G0805102	RST CHIPR 1K OHM +-5% 1/8W	
R958	061G0805102	RST CHIPR 1K OHM +-5% 1/8W	
R935	061G0805102	RST CHIPR 1K OHM +-5% 1/8W	
R821	061G0805103	RST CHIPR 10K OHM +-5% 1/8W	
R926	061G0805103	RST CHIPR 10K OHM +-5% 1/8W	
R937	061G0805103	RST CHIPR 10K OHM +-5% 1/8W	
R938	061G0805103	RST CHIPR 10K OHM +-5% 1/8W	
R949	061G0805103	RST CHIPR 10K OHM +-5% 1/8W	
R961	061G0805103	RST CHIPR 10K OHM +-5% 1/8W	
R941	061G0805104	RST CHIPR 100K OHM +-5% 1/8W	
R808	061G0805105	RST CHIPR 1M OHM +-5% 1/8W	
R819	061G0805105	RST CHIPR 1M OHM +-5% 1/8W	
R818	061G0805120 1F	RST CHIP 1K2 /8W 1%	
R803	061G0805122	RST CHIPR 1.2 KOHM +-5% 1/8W	
R836	061G0805122	RST CHIPR 1.2 KOHM +-5% 1/8W	
R811	061G0805155	RST CHIPR 1.5 MOHM +-5% 1/8W	
R983	061G0805182	RST CHIPR 1.8 KOHM +-5% 1/8W	
R954	061G0805184	RST CHIPR 180K OHM +-5% 1/8W	
R940	061G0805200 1F	RST CHIPR 2 KOHM +-1% 1/8W	
R846	061G0805201	RST CHIPR 200 OHM +-5% 1/8W	

英华家电维修资料软件专用 购买QQ:505966338

R845	061G0805201	RST CHIPR 200 OHM +-5% 1/8W	
R844	061G0805201	RST CHIPR 200 OHM +-5% 1/8W	
R843	061G0805201	RST CHIPR 200 OHM +-5% 1/8W	
R933	061G0805240 2F	RST CHIPR 24 KOHM +-1% 1/8W	
R934	061G0805270 2F	RST CHIPR 27 KOHM +-1% 1/8W	
R960	061G0805272	RST CHIPR 2.7 KOHM +-5% 1/8W	
R806	061G0805335	3.3M 0805	
R809	061G0805360 2F	RST CHIPR 36 KOHM +-1% 1/8W	
R924	061G0805362	RST CHIPR 3.6 KOHM +-5% 1/8W	
R932	061G0805392	3.9 KOHM 1/10W	
R947	061G0805470	RST CHIPR 47 OHM +-5% 1/8W	
R959	061G0805471	RST CHIPR 470 OHM +-5% 1/8W	
R824	061G0805510 0F	RST CHIPR 510 OHM +-1% 1/8W	
R827	061G0805510 0F	RST CHIPR 510 OHM +-1% 1/8W	
R814	061G0805513	RST CHIPR 51K OHM +-5% 1/8W	
R925	061G0805513	RST CHIPR 51K OHM +-5% 1/8W	
R953	061G0805513	RST CHIPR 51K OHM +-5% 1/8W	
R982	061G0805560	RST CHIP 56R 1/8W 5%	
R980	061G0805560 3F	RST CHIPR 560 KOHM +-1% 1/8W	
R805	061G0805620 2F	RST CHIPR 62 KOHM +-1% 1/8W	
R984	061G0805750 1F	RST CHIPR 7.5 KOHM +-1% 1/8W	
R978	061G0805820 1F	RST CHIPR 8.2KOHM +-1% 1/8W	
JR908	061G1206000 Y	RST CHIP MAX 0R05 1/4W YAGEO	
JR907	061G1206000 Y	RST CHIP MAX 0R05 1/4W YAGEO	
JR906	061G1206000 Y	RST CHIP MAX 0R05 1/4W YAGEO	
JR905	061G1206000 Y	RST CHIP MAX 0R05 1/4W YAGEO	
JR904	061G1206000 Y	RST CHIP MAX 0R05 1/4W YAGEO	
JR903	061G1206000 Y	RST CHIP MAX 0R05 1/4W YAGEO	
JR901	061G1206000 Y	RST CHIP MAX 0R05 1/4W YAGEO	
JR804	061G1206000 Y	RST CHIP MAX 0R05 1/4W YAGEO	
JR803	061G1206000 Y	RST CHIP MAX 0R05 1/4W YAGEO	
JR802	061G1206000 Y	RST CHIP MAX 0R05 1/4W YAGEO	
JR801	061G1206000 Y	RST CHIP MAX 0R05 1/4W YAGEO	
R804	061G1206103	RST CHIPR 10K OHM +-5% 1/4W	
R832	061G1206103	RST CHIPR 10K OHM +-5% 1/4W	
R833	061G1206103	RST CHIPR 10K OHM +-5% 1/4W	
R835	061G1206103	RST CHIPR 10K OHM +-5% 1/4W	
R837	061G1206103	RST CHIPR 10K OHM +-5% 1/4W	
R966	061G1206104	RST CHIPR 100 KOHM +-5% 1/4W	
R965	061G1206104	RST CHIPR 100 KOHM +-5% 1/4W	
R964	061G1206104	RST CHIPR 100 KOHM +-5% 1/4W	
R963	061G1206104	RST CHIPR 100 KOHM +-5% 1/4W	
R910	061G1206104	RST CHIPR 100 KOHM +-5% 1/4W	
R909	061G1206104	RST CHIPR 100 KOHM +-5% 1/4W	
R906	061G1206104	RST CHIPR 100 KOHM +-5% 1/4W	
R905	061G1206104	RST CHIPR 100 KOHM +-5% 1/4W	
R810	061G1206104	RST CHIPR 100 KOHM +-5% 1/4W	

英华家电维修资料软件专用 购买QQ:505966338

R930	061G1206105	1M 1206	
R931	061G1206105	1M 1206	
R936	061G1206105	1M 1206	
R834	061G1206122	RST CHIPR 1.2 KOHM +-5% 1/4W	
R802	061G1206122	RST CHIPR 1.2 KOHM +-5% 1/4W	
R907	061G1206152	RST CHIPR 1.5 KOHM +-5% 1/4W TZAI YUAN	
R908	061G1206152	RST CHIPR 1.5 KOHM +-5% 1/4W TZAI YUAN	
R917	061G1206220	RST CHIPR 22 OHM +-5% 1/4W	
R918	061G1206220	RST CHIPR 22 OHM +-5% 1/4W	
R952	061G1206221	RST CHIPR 220 OHM +-5% 1/4W	
R975	061G1206221	RST CHIPR 220 OHM +-5% 1/4W	
R903	061G1206304	RST CHIPR 300K OHM +-5% 1/4W	
R902	061G1206304	RST CHIPR 300K OHM +-5% 1/4W	
R901	061G1206304	RST CHIPR 300K OHM +-5% 1/4W	
R968	061G1206330	RST CHIPR 33 OHM +-5% 1/4W	
R969	061G1206330	RST CHIPR 33 OHM +-5% 1/4W	
R971	061G1206330	RST CHIPR 33 OHM +-5% 1/4W	
R972	061G1206330	RST CHIPR 33 OHM +-5% 1/4W	
R951	061G1206335	RST CHIPR 3.3M OHM +-5% 1/4W	
R948	061G1206335	RST CHIPR 3.3M OHM +-5% 1/4W	
R942	061G1206335	RST CHIPR 3.3M OHM +-5% 1/4W	
R967	061G1206339	RST CHIPR 3.3 OHM +-5% 1/4W	
R946	061G1206430 3F	RST CHIPR 430 KOHM +-1% 1/4W	
R950	061G1206430 3F	RST CHIPR 430 KOHM +-1% 1/4W	
R955	061G1206430 3F	RST CHIPR 430 KOHM +-1% 1/4W	
R916	061G1206472	RST CHIPR 4.7K OHM +-5% 1/4W	
R976	061G1206475	RST CHIPR 4.7 MOHM +-5% 1/4W	
R970	061T12061504FY	RST CHIP 1M5 1/4W 1%	
R973	061T12061504FY	RST CHIP 1M5 1/4W 1%	
R977	061T12061504FY	RST CHIP 1M5 1/4W 1%	
C808	065G060310232K Y	CAP CHIP 0603 1N 50V X7R +/-10%	
C818	065G060333332K Y	CAP CHIP 0603 33NF K 50V X7R	
C817	065G060333332K Y	CAP CHIP 0603 33NF K 50V X7R	
C819	065G060368131J 3	CAP CHIP 0603 680PF 50V NPO +/-5%	
C820	065G060368131J 3	CAP CHIP 0603 680PF 50V NPO +/-5%	
C938	065G080510131J 3	CAP CHIP 0805 100P 50V NPO +/-5%	
C936	065G080510231J 3	CAP CHIP 0805 1N 50V NPO +/-5%	
C811	065G080510322K Y	CAP CHIP 0805 10NF K 25V X7R	
C924	065G080510332K Y	CAP CHIP 0805 10N 50V X7R +/-10%	
C959	065G080510432K 3	CAP CHIP 0805 100N 50V X7R +/-10%	
C951	065G080510432K 3	CAP CHIP 0805 100N 50V X7R +/-10%	
C948	065G080510432K 3	CAP CHIP 0805 100N 50V X7R +/-10%	
C940	065G080510432K 3	CAP CHIP 0805 100N 50V X7R +/-10%	
C933	065G080510432K 3	CAP CHIP 0805 100N 50V X7R +/-10%	
C932	065G080510432K 3	CAP CHIP 0805 100N 50V X7R +/-10%	
C918	065G080510432K 3	CAP CHIP 0805 100N 50V X7R +/-10%	
C915	065G080510432K 3	CAP CHIP 0805 100N 50V X7R +/-10%	

英华家电维修资料软件专用 购买QQ:505966338

C913	065G080510432K	3	CAP CHIP 0805 100N 50V X7R +/-10%
C806	065G080510432K	3	CAP CHIP 0805 100N 50V X7R +/-10%
C935	065G080510522K	3	CAP CHIP 0805 1U 25V X7R +/-10%
C934	065G080510522K	3	CAP CHIP 0805 1U 25V X7R +/-10%
C809	065G080510522K	3	CAP CHIP 0805 1U 25V X7R +/-10%
C926	065G080510537Z	3	CAP CHIP 0805 1U 50V Y5V -20%+80%
C816	065G080515231J	Y	CAP CHIP 0805 1N5 50V NPO +/-5%
C923	065G080522132K	Y	CAP CHIP 0805 220P 50V X7R +/-10%
C815	065G080522232K	A	CAP CHIP 0805 2200PF K 50V X7R
C957	065G080522432K	Y	CAP CHIP 0805 0.22UF K 50V X7R
C956	065G080522432K	Y	CAP CHIP 0805 0.22UF K 50V X7R
C802	065G080522522K	M	MLCC 0805 CAP 2.2UF 25V X7R
C814	065G080522522K	M	MLCC 0805 CAP 2.2UF 25V X7R
C822	065G080522522K	M	MLCC 0805 CAP 2.2UF 25V X7R
C807	065G080533131G	W	CAP CHIP 0805 330PF G 50V NPO
C925	065G080533432K	Y	CAP CHIP 0805 330N 50V X7R +/-10%
C955	065G080547222K	Y	CAP CHIP 0805 4700PF K 25V X7R
C937	065G080547222K	Y	CAP CHIP 0805 4700PF K 25V X7R
C810	065G080547232K	Y	CAP CHIP 0805 4700PF K 50V X7R
C813	065G080547232K	Y	CAP CHIP 0805 4700PF K 50V X7R
C812	065G080547332K	Y	CAP CHIP 0805 47N 50V X7R +/-10%
C922	065G080547332K	Y	CAP CHIP 0805 47N 50V X7R +/-10%
C908	065G120610272K	Y	CAP CHIP 1206 1NF K 500V X7R
C907	065G120610272K	Y	CAP CHIP 1206 1NF K 500V X7R
C916	065G120622272K	Y	CAP CHIP 1206 2200PF K 500V X7R
C917	065G120622272K	Y	CAP CHIP 1206 2200PF K 500V X7R
C944	065G120622272K	Y	CAP CHIP 1206 2200PF K 500V X7R
C949	065G120622272K	Y	CAP CHIP 1206 2200PF K 500V X7R
D805	093G 64 42 PP		BAV70 SOT-23
D920	093G3060 1 T		DIODE SUF305B 3A/600V DO-214AA
D802	093T 60S 5 T		SCS0520P SOD-123
D804	093T 60S 5 T		SCS0520P SOD-123
T802	006G 31502		1.5MM RIVET
L904	006G 31502		1.5MM RIVET
IC903	056G 158 10 T		IC AS431AZTR-E1 TO-92
IC908	056G 158 10 T		IC AS431AZTR-E1 TO-92
IC903	056G 158 12		KIA431A-AT/P TO-92
IC908	056G 158 12		KIA431A-AT/P TO-92
Q904	057G 420 3 T		TRA KTA1273-Y- AT/ P_TO-92L KEC
R919	061G 17210352T		CFR 10KOHM +-5% 1/4W
R929	061G 17247152T		470OHM 5% 1/4W
R801	061G 30310852T	GP	FUSE RESISTOR
R904	061G 30347852T	GP	RST FUSER 0.47OHM +-5% 1W
R817	061G 60210252T		CFR 1K OHM +-5% 1/6W
R928	061G152M27852T		RST MOFR 0.27 OHM +-5% 2WS
R981	061T152M12952T		RST MOFR 1.2OHM +-5% 2WS
C803	065G 1K101 2T6921		CAP CER 100PF 1KV K Y5P

英华家电维修资料软件专用 购买QQ:505966338

C821	065G 1K101 2T6921	CAP CER 100PF 1KV K Y5P	
C928	065G 2K102 2T6921	CAP CER 1000PF 2KV K Y5P	
C942	065G 2K102 2T6921	CAP CER 1000PF 2KV K Y5P	
C910	065G 2K222 2T6921	CAP CER 2200PF K 2KV Y5P	
C954	067G215S1007RT	EC 10UF 50V 5*11MM	
C931	067G215S1007RT	EC 10UF 50V 5*11MM	
C914	067G215S1007RT	EC 10UF 50V 5*11MM	
C952	067G215S4707RT	EC 47UF 50V 6.3*11 MM	
C953	067G215S4707RT	EC 47UF 50V 6.3*11 MM	
C801	067G215Y4707KT	47UF 50V	
C952	067G215Y4707KT	47UF 50V	
C953	067G215Y4707KT	47UF 50V	
FB901	071G 55 9 T	FERRITE BEAD	
ZD904	093G 3916652T	MTZJ15B (13.89-14.62)	
ZD902	093G 3916752T	MTZJ T-72 16B	
ZD903	093G 3917152T	TZJ T-72 30B	
D918	093G 64 1152T	1N4148	
D917	093G 64 1152T	1N4148	
D916	093G 64 1152T	1N4148	
D915	093G 64 1152T	1N4148	
D909	093G 64 1152T	1N4148	
D810	093G 64 1152T	1N4148	
D809	093G 64 1152T	1N4148	
D808	093G 64 1152T	1N4148	
D807	093G 64 1152T	1N4148	
D806	093G 64 1152T	1N4148	
D803	093G 64 1152T	1N4148	
D801	093G 64 1152T	1N4148	
D918	093G 64 1152T FA	SWITCH DIODE 1N4148 BY FAIRCHILD	
D917	093G 64 1152T FA	SWITCH DIODE 1N4148 BY FAIRCHILD	
D916	093G 64 1152T FA	SWITCH DIODE 1N4148 BY FAIRCHILD	
D915	093G 64 1152T FA	SWITCH DIODE 1N4148 BY FAIRCHILD	
D909	093G 64 1152T FA	SWITCH DIODE 1N4148 BY FAIRCHILD	
D810	093G 64 1152T FA	SWITCH DIODE 1N4148 BY FAIRCHILD	
D806	093G 64 1152T FA	SWITCH DIODE 1N4148 BY FAIRCHILD	
D807	093G 64 1152T FA	SWITCH DIODE 1N4148 BY FAIRCHILD	
D918	093G 64 1152T PH	SWITCH DIODE 1N4148 BY PHILIPS	
D917	093G 64 1152T PH	SWITCH DIODE 1N4148 BY PHILIPS	
D916	093G 64 1152T PH	SWITCH DIODE 1N4148 BY PHILIPS	
D915	093G 64 1152T PH	SWITCH DIODE 1N4148 BY PHILIPS	
D909	093G 64 1152T PH	SWITCH DIODE 1N4148 BY PHILIPS	
D810	093G 64 1152T PH	SWITCH DIODE 1N4148 BY PHILIPS	
D807	093G 64 1152T PH	SWITCH DIODE 1N4148 BY PHILIPS	
D806	093G 64 1152T PH	SWITCH DIODE 1N4148 BY PHILIPS	
D801	093G 6452452T	DIODE 1N4148-B4006 DO-35 SEMTECH	
D803	093G 6452452T	DIODE 1N4148-B4006 DO-35 SEMTECH	
D808	093G 6452452T	DIODE 1N4148-B4006 DO-35 SEMTECH	

英华家电维修资料软件专用 购买QQ:505966338

D809	093G 6452452T	DIODE 1N4148-B4006 DO-35 SEMTECH	
D919	093G110050152T	DIODE PR1007 1A/1000V 500NS DO-41	
D914	093G110050152T	DIODE PR1007 1A/1000V 500NS DO-41	
D913	093G110050152T	DIODE PR1007 1A/1000V 500NS DO-41	
D902	093T1080 252T	DIODE SARSO1-V1 SANKEN	
D912	093T1080 252T	DIODE SARSO1-V1 SANKEN	
D913	093T1080 252T	DIODE SARSO1-V1 SANKEN	
D914	093T1080 252T	DIODE SARSO1-V1 SANKEN	
D919	093T1080 252T	DIODE SARSO1-V1 SANKEN	
J919	095G 90 23	JUMPER WIRE	
J918	095G 90 23	JUMPER WIRE	
J917	095G 90 23	JUMPER WIRE	
J926	095G 90 23	JUMPER WIRE	
J925	095G 90 23	JUMPER WIRE	
J924	095G 90 23	JUMPER WIRE	
J923	095G 90 23	JUMPER WIRE	
J909	095G 90 23	JUMPER WIRE	
J920	095G 90 23	JUMPER WIRE	
J921	095G 90 23	JUMPER WIRE	
J922	095G 90 23	JUMPER WIRE	
J914	095G 90 23	JUMPER WIRE	
J915	095G 90 23	JUMPER WIRE	
J916	095G 90 23	JUMPER WIRE	
J912	095G 90 23	JUMPER WIRE	
J913	095G 90 23	JUMPER WIRE	
J911	095G 90 23	JUMPER WIRE	
D903	095G 90 23	JUMPER WIRE	
D911	095G 90 23	JUMPER WIRE	
J801	095G 90 23	JUMPER WIRE	
J802	095G 90 23	JUMPER WIRE	
J803	095G 90 23	JUMPER WIRE	
J804	095G 90 23	JUMPER WIRE	
J811	095G 90 23	JUMPER WIRE	
J812	095G 90 23	JUMPER WIRE	
J814	095G 90 23	JUMPER WIRE	
J901	095G 90 23	JUMPER WIRE	
J902	095G 90 23	JUMPER WIRE	
J903	095G 90 23	JUMPER WIRE	
J904	095G 90 23	JUMPER WIRE	
J905	095G 90 23	JUMPER WIRE	
J906	095G 90 23	JUMPER WIRE	
J907	095G 90 23	JUMPER WIRE	
J908	095G 90 23	JUMPER WIRE	
	715G3351 1 HV	TV POWER-PCB 220X250 1.6MM CEM-1 SS 1OZ	
FB902	071G 55 9 T	FERRITE BEAD	
C943	065G 2K102 2T6921	CAP CER 1000PF 2KV K Y5P	
R921	061G 17222052T	RST CFR 22 OHM +-5% 1/4W	

英华家电维修资料软件专用 购买QQ:505966338

R927	061G 17210252T	1K OHM 5% 1/4W	
C803	065G 1K101 5T6921	100PF /1KV	
C821	065G 1K101 5T6921	100PF /1KV	
CN901	006G 31500 GP	EYELET	
ZD903	093G 39G 9	DIODE MTZJ30B DO-34	
R847	061G0603514	RST CHIPR 510 KOHM +-5% 1/10W	
JR805	061G1206000 Y	RST CHIP MAX 0R05 1/4W YAGEO	
JR806	061G1206000 Y	RST CHIP MAX 0R05 1/4W YAGEO	
R985	061G1206152	RST CHIPR 1.5 KOHM +-5% 1/4W TZAI YUAN	
R986	061G1206152	RST CHIPR 1.5 KOHM +-5% 1/4W TZAI YUAN	
R857	061G0603274	RST CHIPR 270 KOHM +-5% 1/10W	
C907	065G120610272K T	CAP CHIP 1206 1000PF 25V X7R	
C908	065G120610272K T	CAP CHIP 1206 1000PF 25V X7R	
C949	065G120622272K 3	CER 1206 2N2 500V X7R 10%	
C944	065G120622272K 3	CER 1206 2N2 500V X7R 10%	
C917	065G120622272K 3	CER 1206 2N2 500V X7R 10%	
C916	065G120622272K 3	CER 1206 2N2 500V X7R 10%	
C812	065G080547332K 3	CAP CHIP 0805 47N 50V X7R +/-10%	
C922	065G080547332K 3	CAP CHIP 0805 47N 50V X7R +/-10%	
C810	065G080547232K 3	CAP CHIP 0805 4N7 50V X7R +/-10%	
C813	065G080547232K 3	CAP CHIP 0805 4N7 50V X7R +/-10%	
C819	065G060368131J Y	CAP CHIP 0603 680PF J 50V NPO	
C820	065G060368131J Y	CAP CHIP 0603 680PF J 50V NPO	
C938	065G080510131J Y	CAP CHIP 0805 100PF J 50V NPO	
C936	065G080510231J Y	CAP CHIP 0805 1N 50V NPO +/-5%	
C933	065G080510432K T	CAP 0805 0.1UF K 50V X7R TAIYO YUDEN	
C959	065G080510432K T	CAP 0805 0.1UF K 50V X7R TAIYO YUDEN	
C951	065G080510432K T	CAP 0805 0.1UF K 50V X7R TAIYO YUDEN	
C948	065G080510432K T	CAP 0805 0.1UF K 50V X7R TAIYO YUDEN	
C940	065G080510432K T	CAP 0805 0.1UF K 50V X7R TAIYO YUDEN	
C932	065G080510432K T	CAP 0805 0.1UF K 50V X7R TAIYO YUDEN	
C918	065G080510432K T	CAP 0805 0.1UF K 50V X7R TAIYO YUDEN	
C915	065G080510432K T	CAP 0805 0.1UF K 50V X7R TAIYO YUDEN	
C913	065G080510432K T	CAP 0805 0.1UF K 50V X7R TAIYO YUDEN	
C806	065G080510432K T	CAP 0805 0.1UF K 50V X7R TAIYO YUDEN	
C935	065G080510522K T	CAP CHIP 0805 1UF K 25V X7R	
C934	065G080510522K T	CAP CHIP 0805 1UF K 25V X7R	
C926	065G080510537Z T	CAP CHIP 0805 1UF Z 50V Y5V	
C816	065G080515231J W	CAP CHIP 0805 1500PF J 50V NPO	
C802	065G080522522K 3	CAP CHIP 0805 2U2 25V X7R +/-10%	
C814	065G080522522K 3	CAP CHIP 0805 2U2 25V X7R +/-10%	
C822	065G080522522K 3	CAP CHIP 0805 2U2 25V X7R +/-10%	
C809	065G080510522K T	CAP CHIP 0805 1UF K 25V X7R	
C925	065G080533432K 3	CAP CHIP 0805 330N 50V X7R +/-10%	
C810	065G080547232K A	CAP CHIP 0805 4700PF K 50V X7R	
C813	065G080547232K A	CAP CHIP 0805 4700PF K 50V X7R	
C819	065G060368131J A	CAP CHIP 0603 680PF J 50V NPO	

英华家电维修资料软件专用 购买QQ:505966338

C820	065G060368131J A	CAP CHIP 0603 680PF J 50V NPO	
C808	065G060310232K A	CAP CHIP 0603 1000PF K 50V X7R	
C938	065G080510131J A	CAP CHIP 0805 100PF J 50V NPO	
C936	065G080510231J A	CAP CHIP 0805 1000PF J 50V NPO	
C907	065G120610272K F	CAP CHIP 1206 1NF K 500V X7R	
C908	065G120610272K F	CAP CHIP 1206 1NF K 500V X7R	
C812	065G080547332K F	CAP CHIP 0805 47NF K 50V X7R	
C922	065G080547332K F	CAP CHIP 0805 47NF K 50V X7R	
C810	065G080547232K F	CAP CHIP 0805 4700PF K 50V X7R	
C813	065G080547232K F	CAP CHIP 0805 4700PF K 50V X7R	
C811	065G080510322K A	CAP CHIP 0805 10NF K 25V X7R	
C924	065G080510332K A	CAP CHIP 0805 10NF K 50V X7R	
C933	065G080510432K A	CAP CHIP 0805 100NF K 50V X7R	
C959	065G080510432K A	CAP CHIP 0805 100NF K 50V X7R	
C951	065G080510432K A	CAP CHIP 0805 100NF K 50V X7R	
C948	065G080510432K A	CAP CHIP 0805 100NF K 50V X7R	
C940	065G080510432K A	CAP CHIP 0805 100NF K 50V X7R	
C932	065G080510432K A	CAP CHIP 0805 100NF K 50V X7R	
C918	065G080510432K A	CAP CHIP 0805 100NF K 50V X7R	
C915	065G080510432K A	CAP CHIP 0805 100NF K 50V X7R	
C913	065G080510432K A	CAP CHIP 0805 100NF K 50V X7R	
C806	065G080510432K A	CAP CHIP 0805 100NF K 50V X7R	
C933	065G080510432K Y	CAP CHIP 0805 100N 50V X7R +/-10%	
C959	065G080510432K Y	CAP CHIP 0805 100N 50V X7R +/-10%	
C951	065G080510432K Y	CAP CHIP 0805 100N 50V X7R +/-10%	
C948	065G080510432K Y	CAP CHIP 0805 100N 50V X7R +/-10%	
C940	065G080510432K Y	CAP CHIP 0805 100N 50V X7R +/-10%	
C932	065G080510432K Y	CAP CHIP 0805 100N 50V X7R +/-10%	
C918	065G080510432K Y	CAP CHIP 0805 100N 50V X7R +/-10%	
C915	065G080510432K Y	CAP CHIP 0805 100N 50V X7R +/-10%	
C913	065G080510432K Y	CAP CHIP 0805 100N 50V X7R +/-10%	
C806	065G080510432K Y	CAP CHIP 0805 100N 50V X7R +/-10%	
C925	065G080533432K A	CAP CHIP 0805 0.33UF K 50V X7R	
C817	065G060333332K A	CAP CHIP 0603 0.033UF K 50V X7R	
C818	065G060333332K A	CAP CHIP 0603 0.033UF K 50V X7R	
C807	065G080533131G A	CAP CHIP 0805 330PF J 50V NPO	
C957	065G080522432K 3	CAP CHIP 0805 220N 50V X7R +/-10%	
C956	065G080522432K 3	CAP CHIP 0805 220N 50V X7R +/-10%	
C923	065G080522132K A	CAP CHIP 0805 220PF K 50V X7R	
C815	065G080522232K Y	CAP CHIP 0805 2N2 50V X7R +/-10%	
C816	065G080515231J A	CAP CHIP 0805 1500PF J 50V NPO	
R815	061G0805513	RST CHIPR 51K OHM +-5% 1/8W	
R973	061G12061504FT	RST CHIP 1M5 1/4W 1%	
R970	061G12061504FT	RST CHIP 1M5 1/4W 1%	
R977	061G12061504FT	RST CHIP 1M5 1/4W 1%	
C815	065G0805222 32	CHIP 2200PF 50V X7R 0805	
	Q51G 6 4509	GLUE_RTV	

英华家电维修资料软件专用 购买QQ:505966338

L904	S73G174147V	TRANSFORMER ASS'Y	
T902	S80GL42T19V	XFMR POWER 850UH TPV-PT	
T901	S80GL52T5V	XFMR POWER 1MH TPV-PT	
	Q11G5052 1	STRING	
	Q11G5057 2	PCB SUPPORT	
	Q11G5059 1	POWER BOARD SUPPORT	
	Q36T 600 31 7	NONWOVEN FABRIC	
	Q36T 600 35 18 GP	NONWOVEN FABRIC	
	Q36T 600 37 21 GP	NONWOVEN FABRIC	
	Q40G 42061536A	RATING LABEL	
	Q40G000260015A	SIDE LABEL	
	Q41G783061516A	WARRANTY CARD	
	Q44GN020101	EPS CUSHION	
	Q44GN020201	EPS CUSHION	
	Q44GN020301	EPS CUSHION	
	Q44GN020401	EPS CUSHION	
	Q44GN020502EPE	EPE	
	Q44GN020601EPE	EPE	
	Q44GN020615 9B	42" AOC TV CARTON	
	Q44T3121510540 GP	PU FOAM	
	Q44T3121510557	PU FOAM	
	Q45G2010M0101A	PE BAG FOR MANUAL	
	Q45T 99609 71	EPE COVER FOR MONITOR	
	Q50G 4 10	TIE (Y1900221)	
	Q50T 500523	CABLE TIE	
	Q52G 1185 99	BIG CARTON TAPE FOR AOC	
	Q52T 1150522	TAPE_INSULATING	
	Z85T0010101	SHIELDING	
	Z85T0015101	SHIELDING-IPTV-42	
	041T780062415A	CERTIFICATE CARD	
	092TB1JX1A3NGC	BATTERY LR03 AAA CH760A2S/G	
	0M1G 940 16 47 CR3	SCREW	
	Q41G42MV615 4A	MANUAL	
	Q45G 76 28NV2 R	PE BAG FOR CLAMP	
	Q45G2010M0102A	PE BAG FOR MANUAL	
	026G 800700 1A	BARCODE LABEL	
	040G 58162435A	P/N LABEL FOR MANUAL PE BAG	
	040G 581689 4A	BARCODE LABEL FOR 1	
	095G8014 4CA18	WIRE HARNESS 4P-4P 1100MM CJT20A0339	
	095G8014 7CA14	WIRE HARNESS 7P-6P 850MM CJT20A0342	