Applicable Country & Regions:
Taiwan/Europe

Product Service Manual – Level 3

Service Manual for BenQ:
Monitor-TV/ML2441
<9H.V0S75.JCE>

Version: 00a
Date:2010/03/18

Notice:
For RO to input specific "Legal Requirement" in specific NS regarding to responsibility and liability statements.
Please check BenQ's eSupport web site, http://esupport.benq.com, to ensure that you have the most recent version of this manual.

First Edition (Mar 2010)

Content Index

Level 3 - Component Repair to Circuit Boards

Theory of Circuit Operation

Video:

The MSD237HFG is a highly integrated controller IC for LCD/PDP DTV applications with resolutions up to full-HD(1920x1080).It is configured with an integrated triple-ADC/PLL, a multi-standard TV video and audio decoder ,a motion adaptive video de-interlacer, a scaling engine, the MstarACE-3 color engine ,an advanced 2D graphics engine,a transport processor, a high-definition(HD)H.264 video decoder ,a RearlMedia decoder,a JEPG video decoder,an MPEG-4 decoder ,and a 24-bit DSP for MPEG audio decoding,a DVI/HDCP/HDMI receiver , and a peripheral control unit providing a vriety of HDTV control funtions.

For digital TV application,the MSD237HFG comprises an MPEG-2 transport processor with advanced section filtering capability, an MPEG-2 (MP@ML profile) video decoder, an MPEG-4 decoder, an H.264 video decoder and an audio DSP decoder for MPEG audio streams,MPEG layer I and II digital audio decoder with analog audio outputs that are designed to support exiting and future DVB-T programs while handling conditional access.

For analog TV, the MSD237HFG includes NTSC/PAL/SECAM multi-standard video decoder comprising a 3-D motion adaptive comb filter and time-based correction,and a NICAM/A2 audio decoder to support worldwide television standards.

Audio:

The PAM8603E is STEREO CLASS-D AUDIO POWER AMPLIFIER IC with output of 2 x 2.5w to 4hm load with 5V supply voltage. PAM8603E features Power Limit Function that were eveloped by PAM original digital amplifier technology. PAM8603E has overcurrent protection function for speaker output terminals, high temperature protection function, and lowsupply voltage malfunction prevention function.

TUNER FEATURES:

INTERMEDIATE FREQUENCIES

SYSTEM	FREQUENCY (MHz) [1]				
	B/G	I	D/K	L	L’
Picture carrier	38.90	38.90	38.90	38.90	33.9
Color	34.47	34.47	34.47	34.47	38.33
Sound 1	33.40	32.90	32.40	32.40	40.40
Digital IF Center Frequency (Bandwidth: 7MHz / 8MHz)	36.1667				

CHANNEL COVERAGE

BAND	FREQUENCY(MHz)
Low band	45.25 to 147.00 MHz
Mid band	147.25 to 431.00MHz
High band	431.25 to 863.25 MHz

PINNING

SYMBOL	PIN	DESCRIPTION
ANT(5V)	1	Supply voltage +5V , for ANT
BB(CTR)	2	Supply voltage +5V , for Booster
GND	3	Ground
+B(5V)	4	Supply voltage +5 V , for Tuner & IF Section
N.C	5	Not connected
RF AGC	6	RF AGC output
VT	7	Tuning Voltage, DO NOT CONNECT IT to ANYWHERE
N.C	8	Not connected
GND	9	Ground
DATA	10	I2C Bus for TUNER PLL, Analog IC. Use it for I2C Bus
CLOCK	11	I2C Bus for TUNER PLL, Analog IC. Use it for I2C Bus
AIF	12	TU IF Output. DO NOT CONNECT IT to ANYWHERE
AIF	13	TU IF Output. DO NOT CONNECT IT to ANYWHERE
N.C	14	AFT (Auto Fine Tuning) Output, DO NOT CONNECT IT to
Video	15	Analog Video Output
Audio	16	Analog Audio Output
SIF	17	Second IF Sound Output
SDA	18	I2C Bus for COFDM IC, Use it for I2C Bus interface
SCL	19	I2C Bus for COFDM IC, Use it for I2C Bus interface
RST	20	COFDM IC Reset . Active at low level
3.3V	21	3.3V Supply for COFDM IC
1.8V	22	1.8V Supply for COFDM IC
ERR	23	Output Error Signal. In case of uncorrectable
MCL	24	Output Byte Clock signal(=MCLK)
D7	25	Output D7 signal (=MDO7)
D6	26	Output D6 signal
D5	27	Output D5 signal
D4	28	Output D4 signal
D3	29	Output D3 signal
D2	30	Output D2 signal
D1	31	Output D1 signal
D0	32	Output D0 signal
VAL	33	Output Data Valid signal (=MOVAL)
SYNC	34	Output Packet sync signal (=MOSTRT)

Circuit Schematics

DC/DC POWER

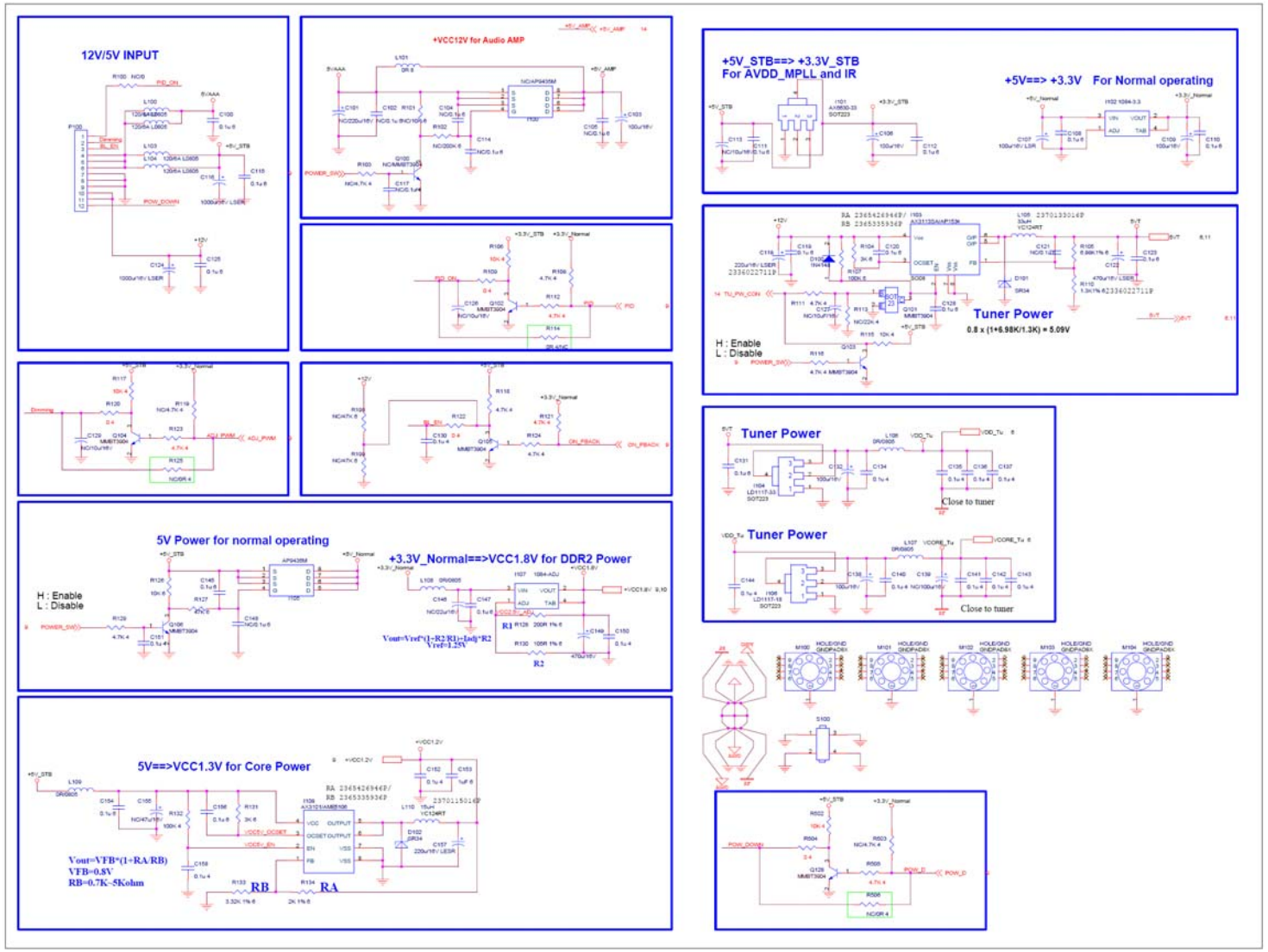

SCART Interface

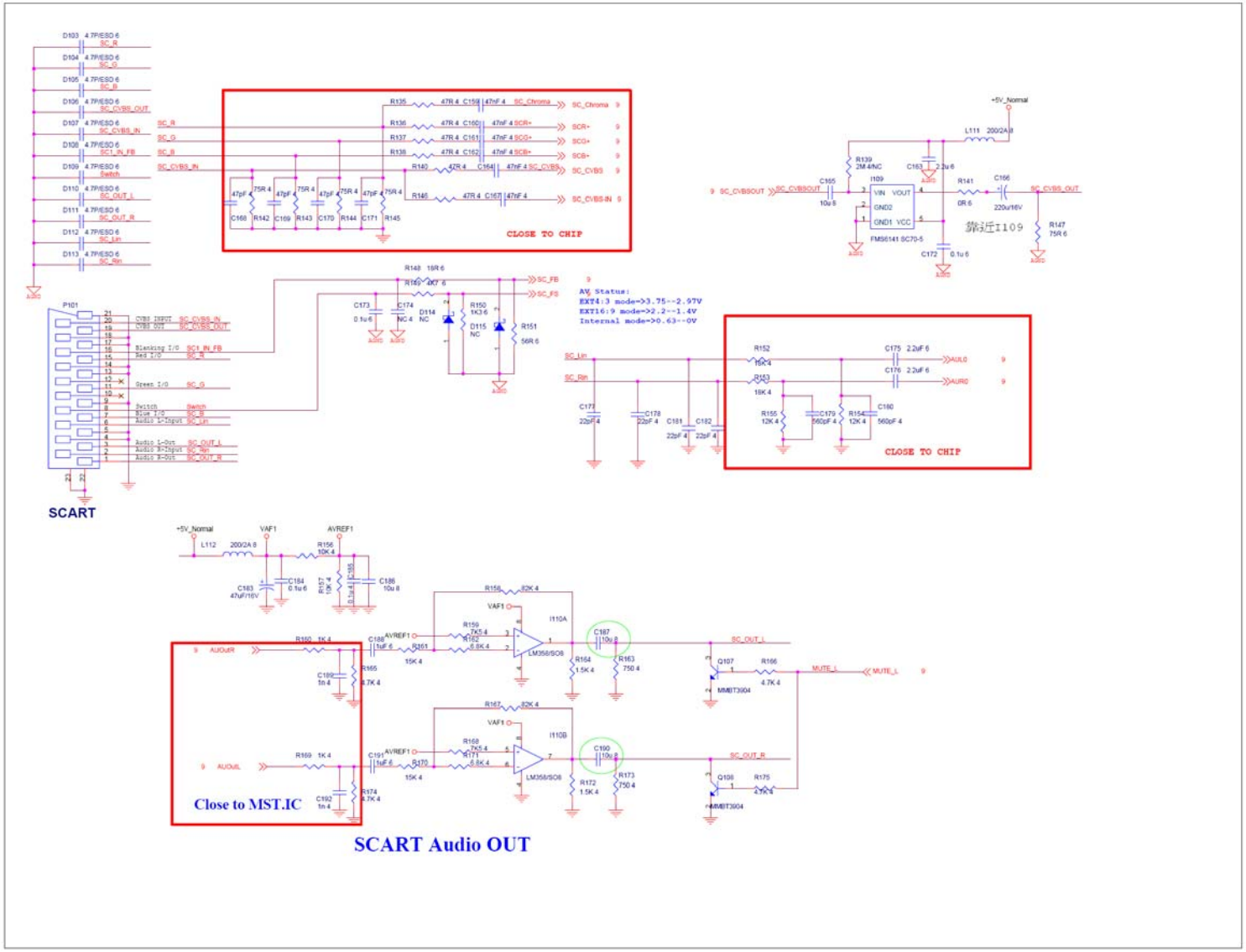

VGA Interface

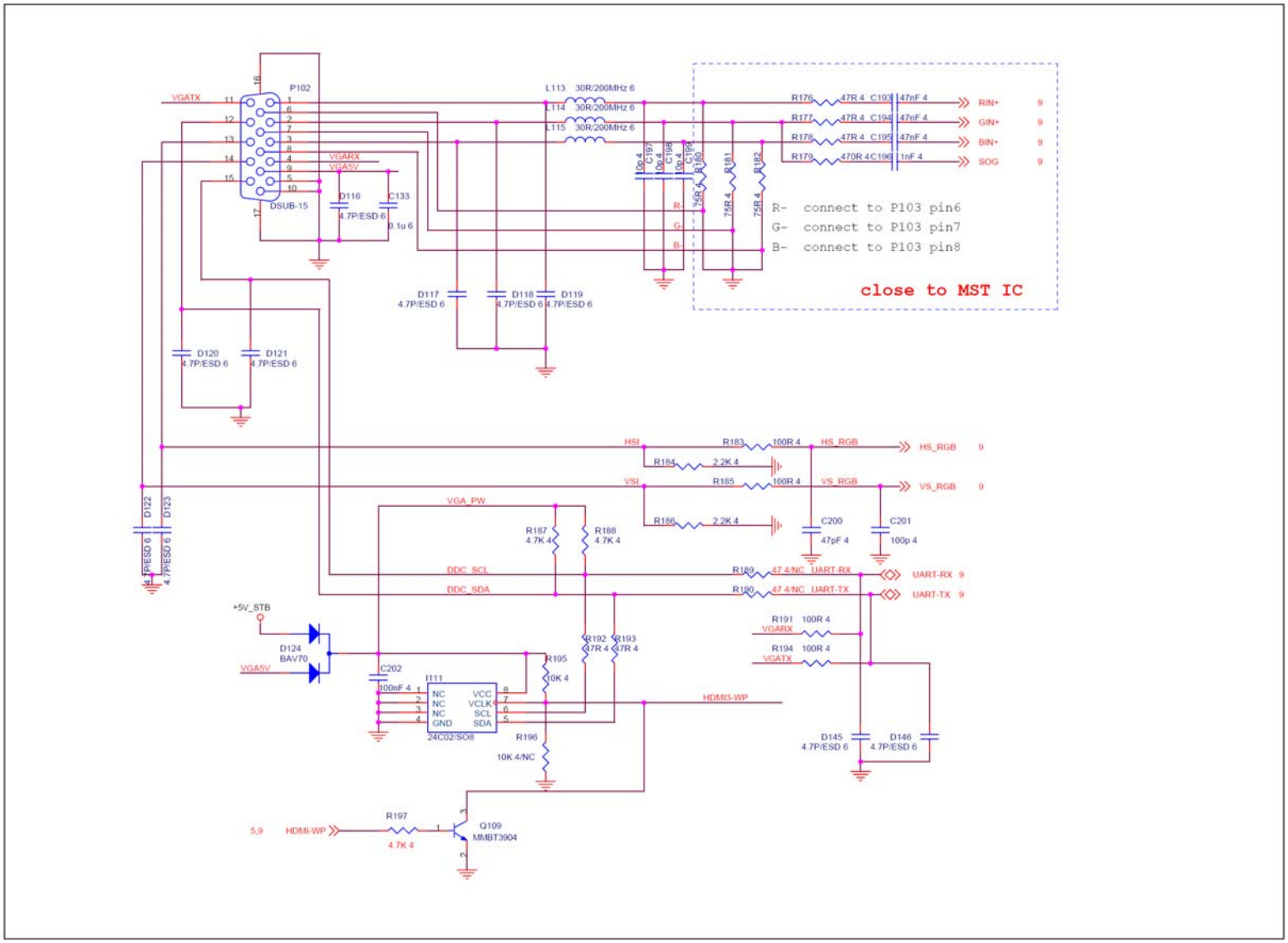

HDMI Interface

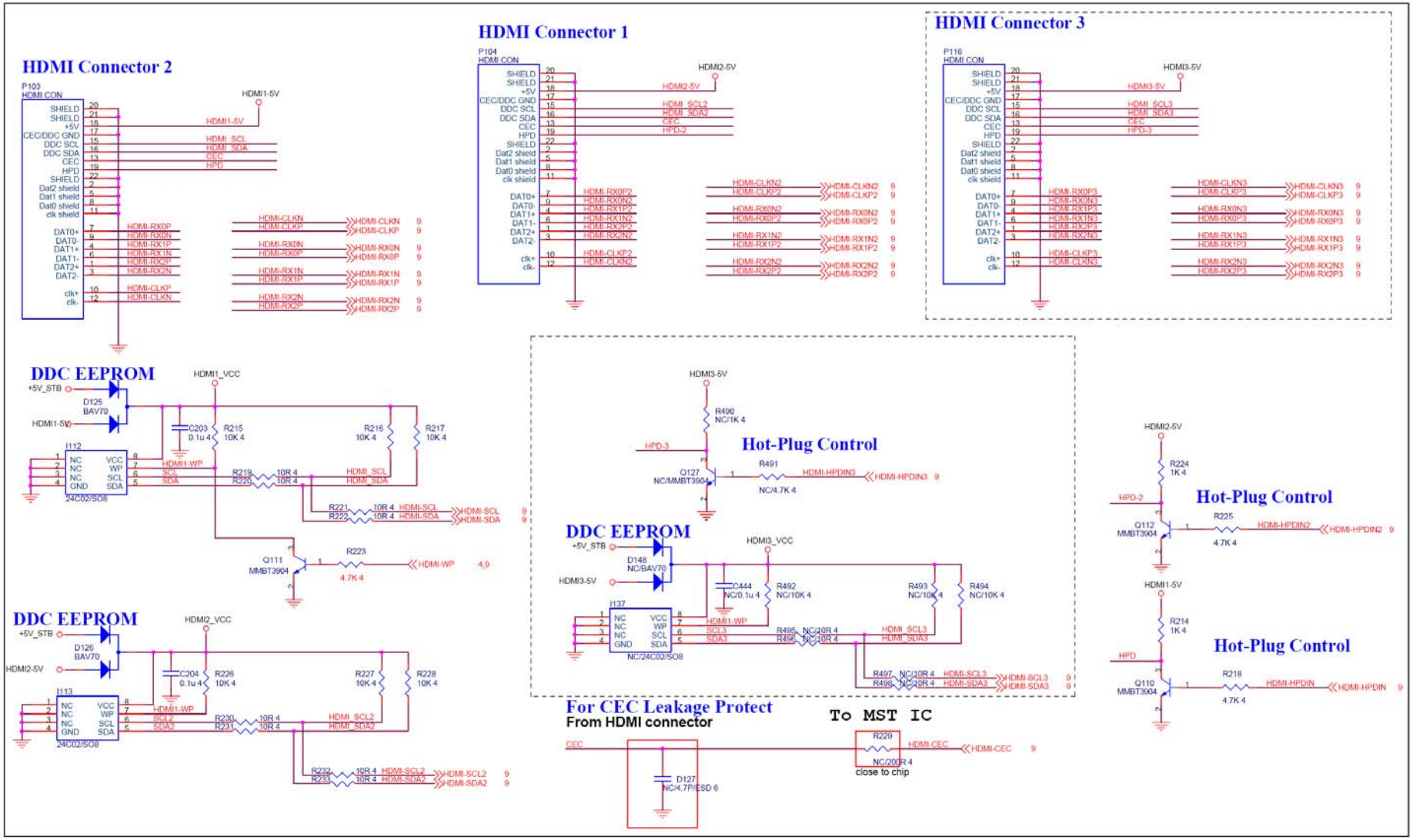

TUNER

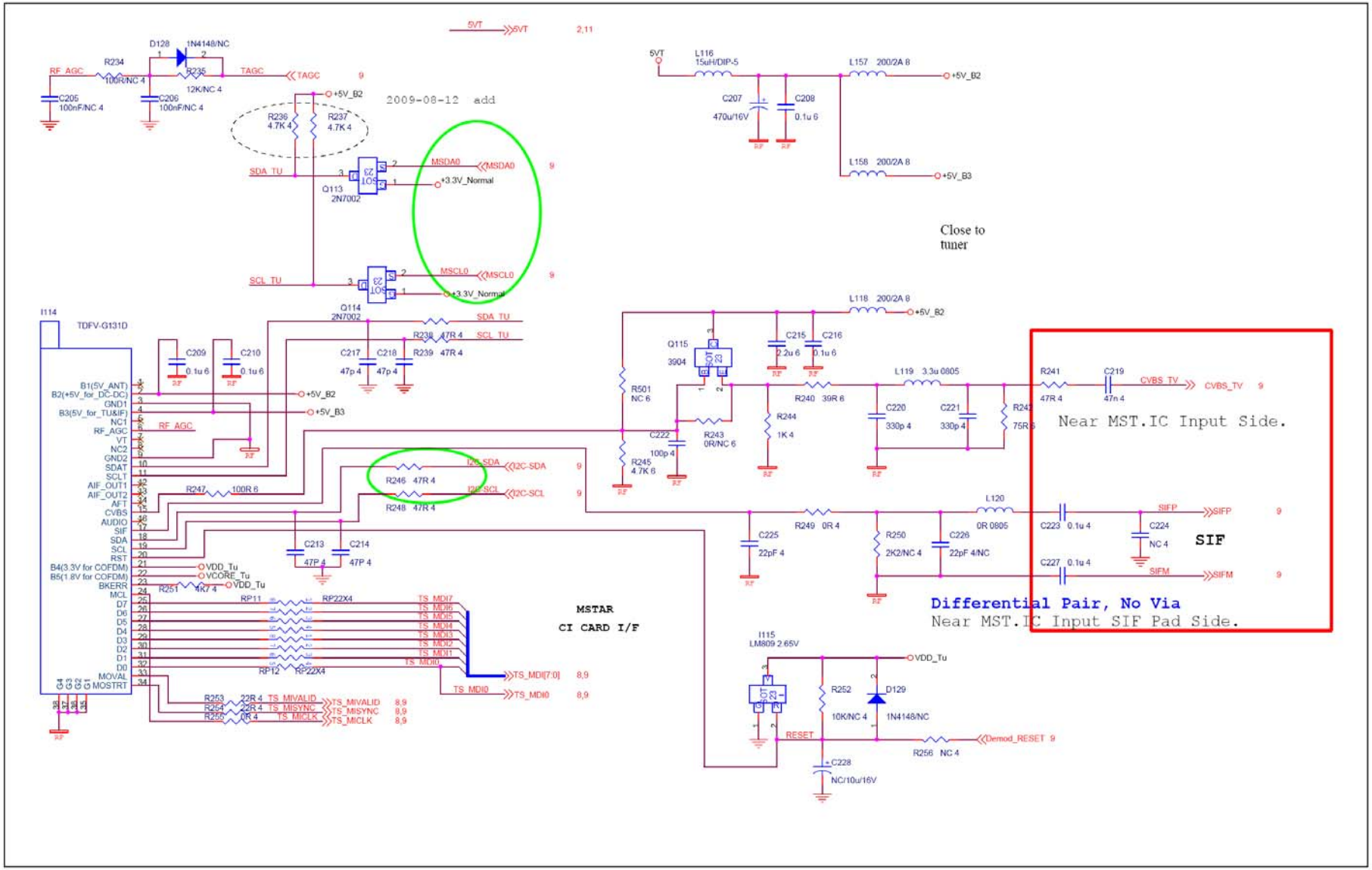
2009-08-12 add
Close to tuner
Near MST.IC Input Side.
Differential Pair, No Via
Near MST.IC Input SIF Pad Side.
MSTAR
CI CARD I/F
SIF
TDFV-G131D
I114
I115
LM809 2.65V
Q113
2N7002
Q114
2N7002
Q115
3904
L116
15uH/DIP-5
L157 200/2A 8
L158 200/2A 8
L118 200/2A 8
L119 3.3u 0805
L120
0R 0805
D128
1N4148/NC
D129
1N4148/NC
RF_AGC
TAGC
SDA_TU
SCL_TU
MSDA0
MSCL0
+3.3V_Normal
+5V_B2
+5V_B3
5VT
VDD_Tu
VCORE_Tu
I2C-SDA
I2C-SCL
CVBS_TV
SIFP
SIFM
Demod_RESET
RESET
TS_MDI[7:0]
TS_MDI0
TS_MIVALID
TS_MISYNC
TS_MICLK

KEYPAD & IR

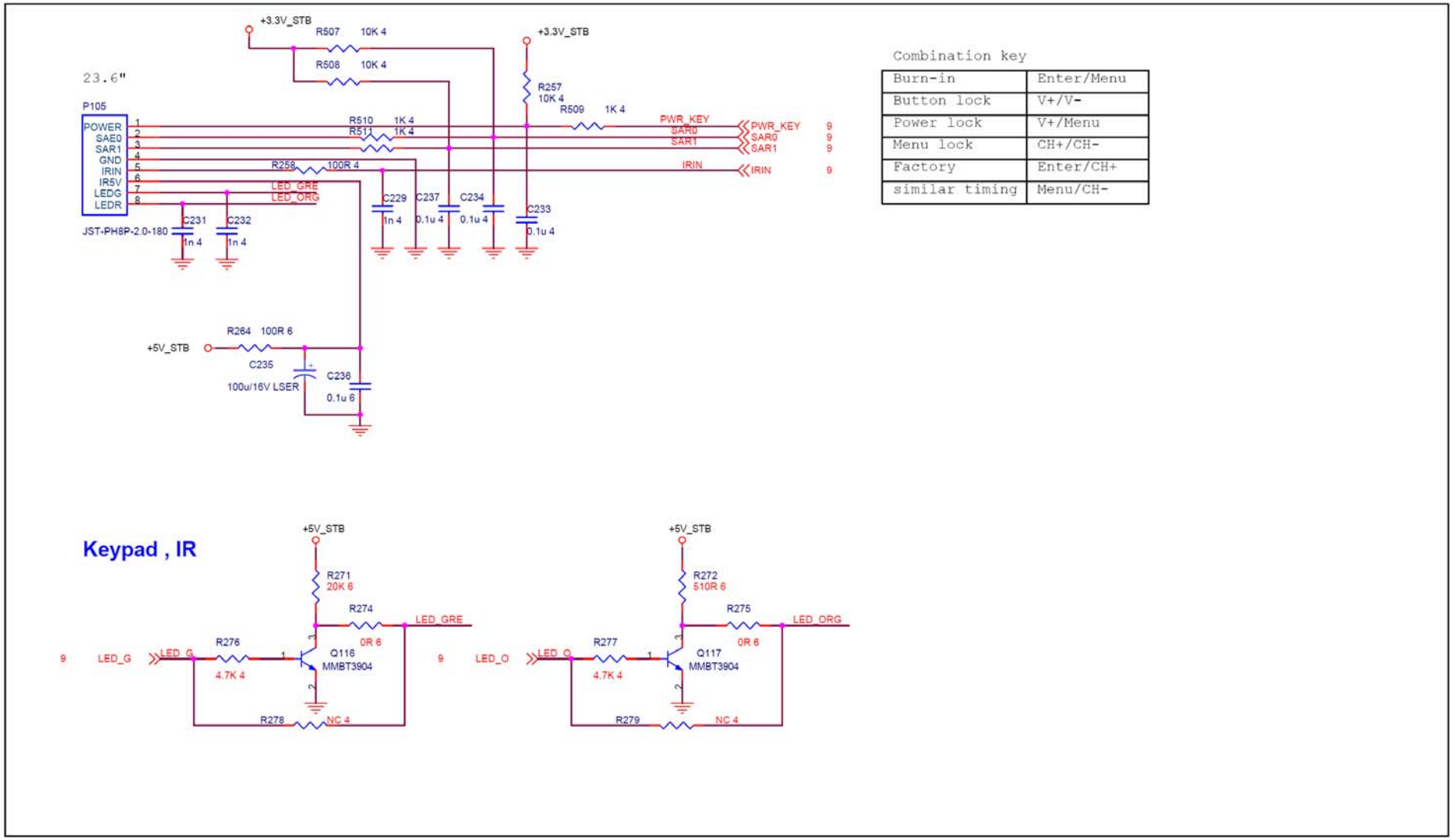
+3.3V_STB
R507 10K 4
R508 10K 4
23.6"
P105
POWER
SAE0
SAR1
GND
IRIN
IR5V
LEDG
LEDR
JST-PH8P-2.0-180
R510 1K 4
R511 1K 4
R258 100R 4
LED_GRE
LED_ORG
C231 1n 4
C232 1n 4
C229 1n 4
C237 0.1u 4
C234 0.1u 4
C233 0.1u 4
R257 10K 4
R509 1K 4
PWR_KEY
SAR0
SAR1
IRIN
R264 100R 6
+5V_STB
C235 100u/16V LSER
C236 0.1u 6
Combination key
Burn-in | Enter/Menu
Button lock | V+/V-
Power lock | V+/Menu
Menu lock | CH+/CH-
Factory | Enter/CH+
similar timing | Menu/CH-
Keypad , IR
R271 20K 6
R274 0R 6
R276 4.7K 4
Q116 MMBT3904
R278 NC 4
LED_G
R272 510R 6
R275 0R 6
R277 4.7K 4
Q117 MMBT3904
R279 NC 4
LED_O

PCMCIA Interface

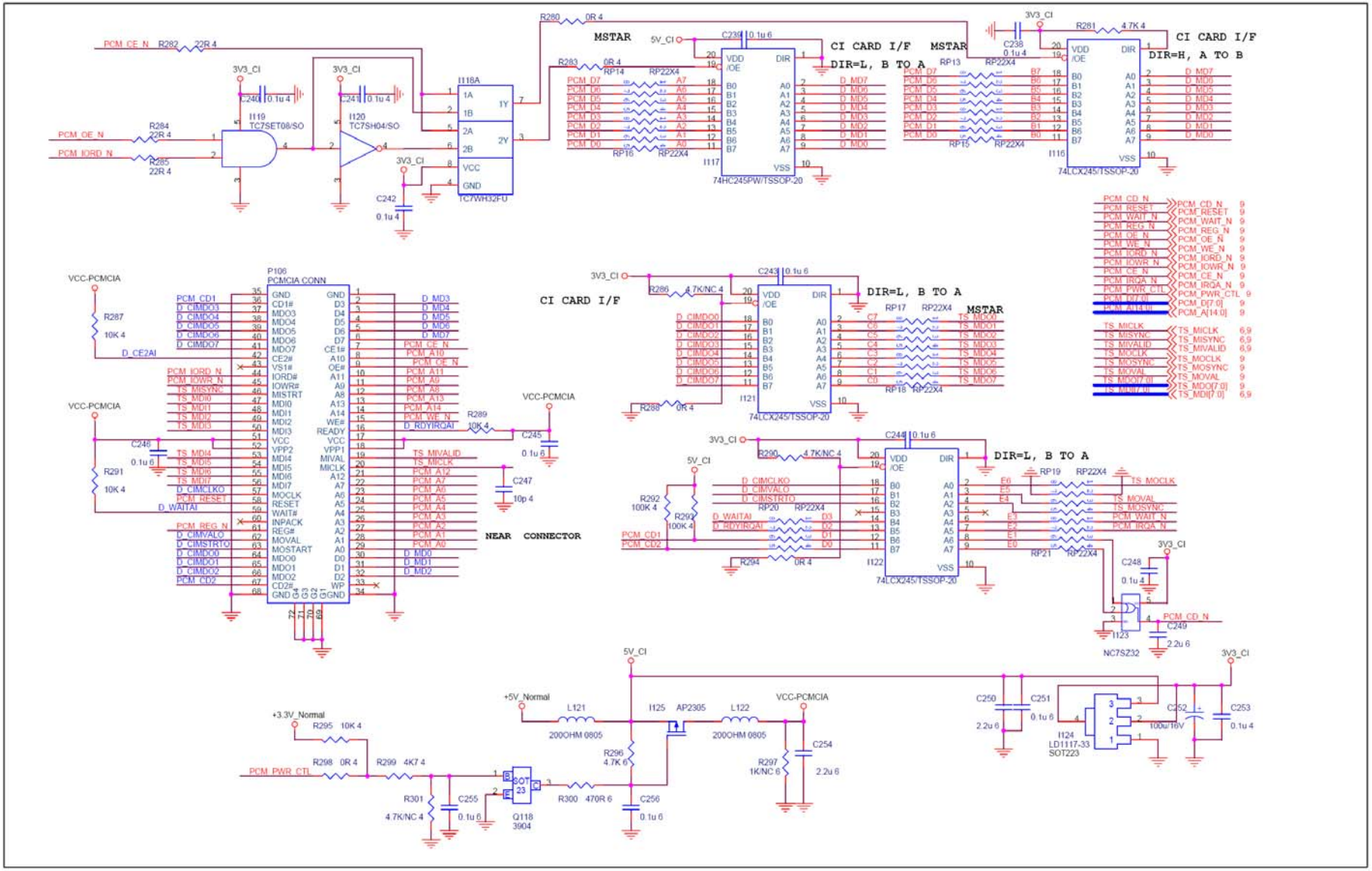

Scaler & Flash

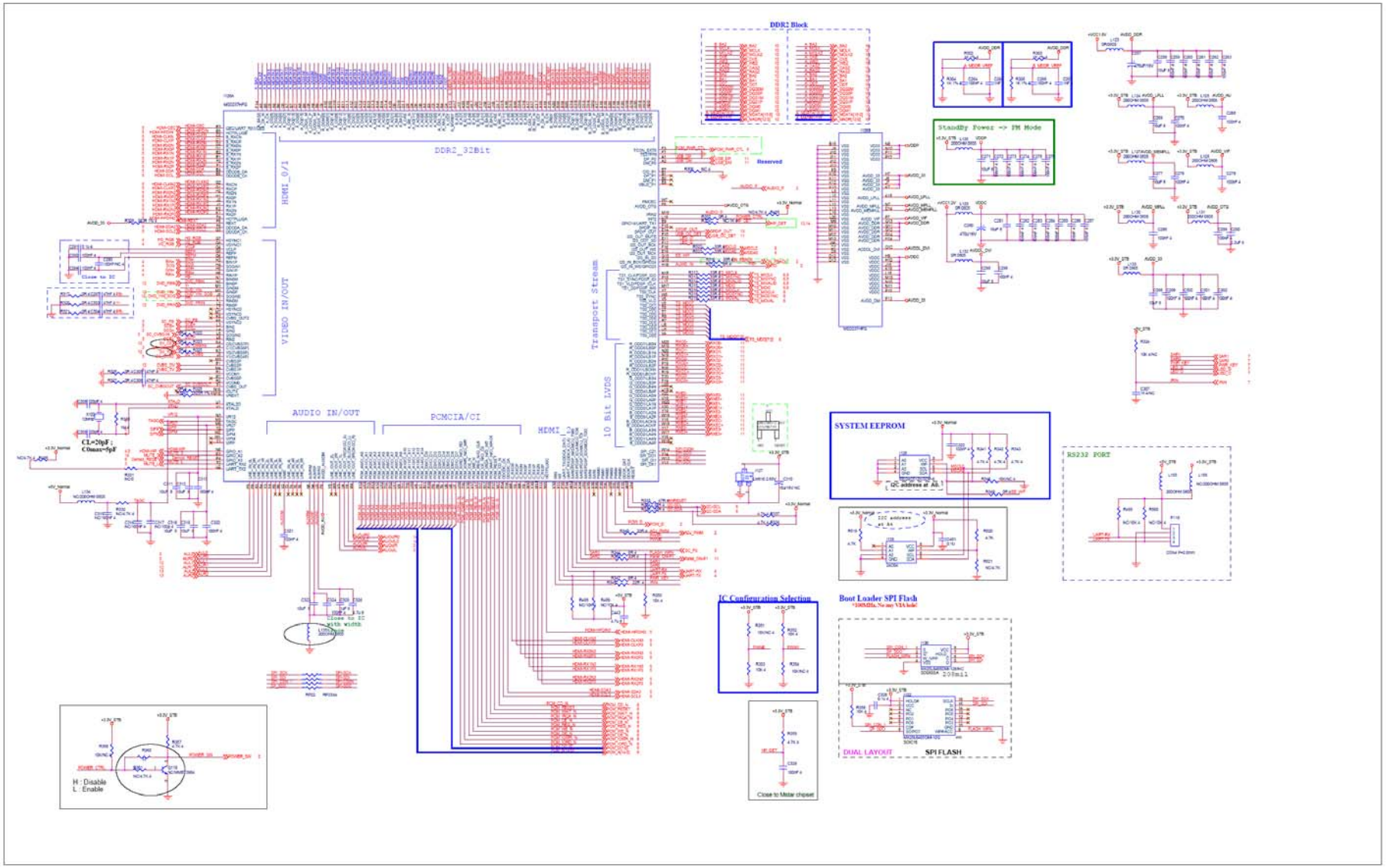

DDR(32 Bits)

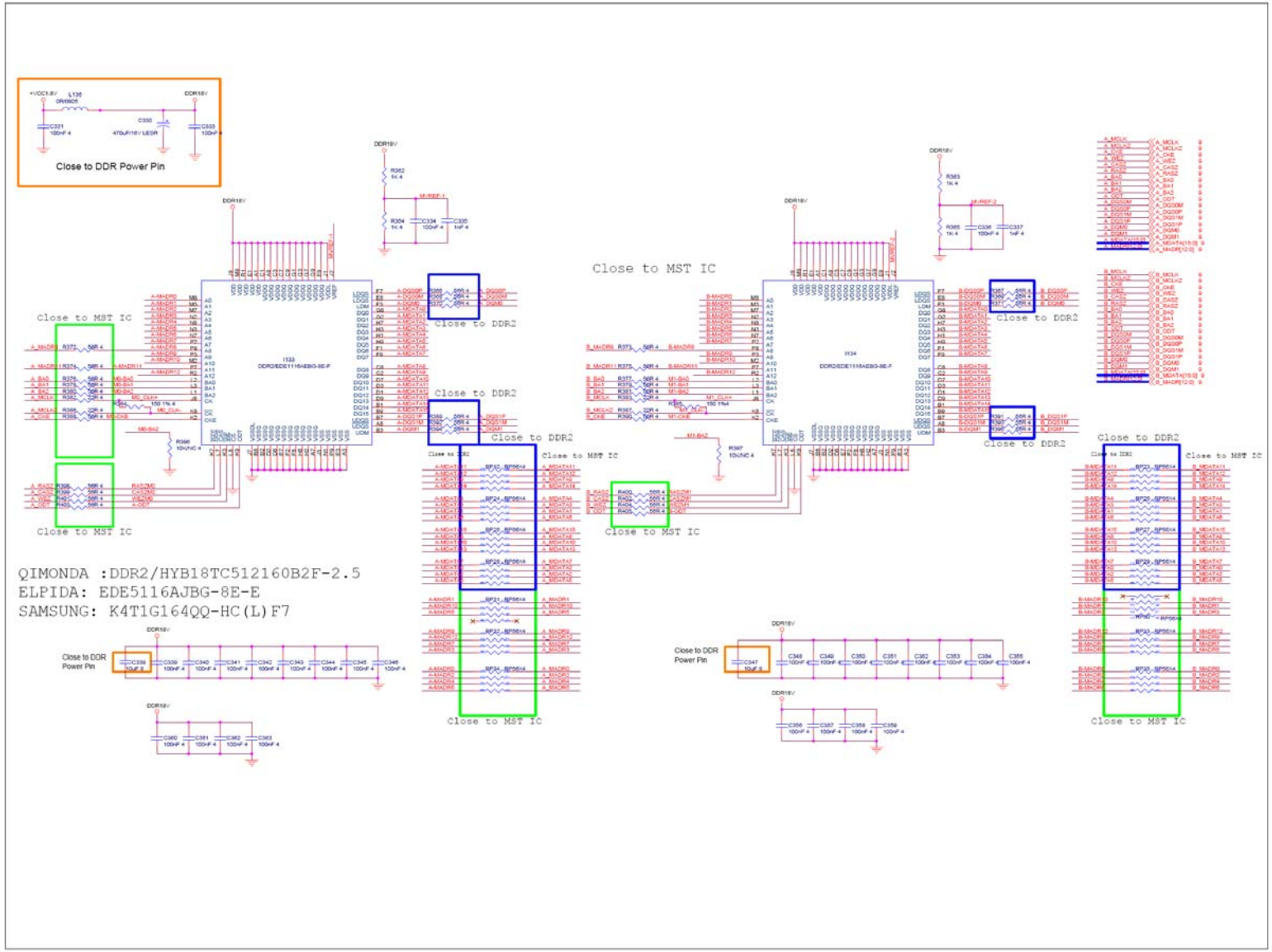
Close to DDR Power Pin
Close to MST IC
Close to DDR2
QIMONDA :DDR2/HYB18TC512160B2F-2.5
ELPIDA: EDE5116AJBG-8E-E
SAMSUNG: K4T1G164QQ-HC(L)F7

Panel & USB Interface

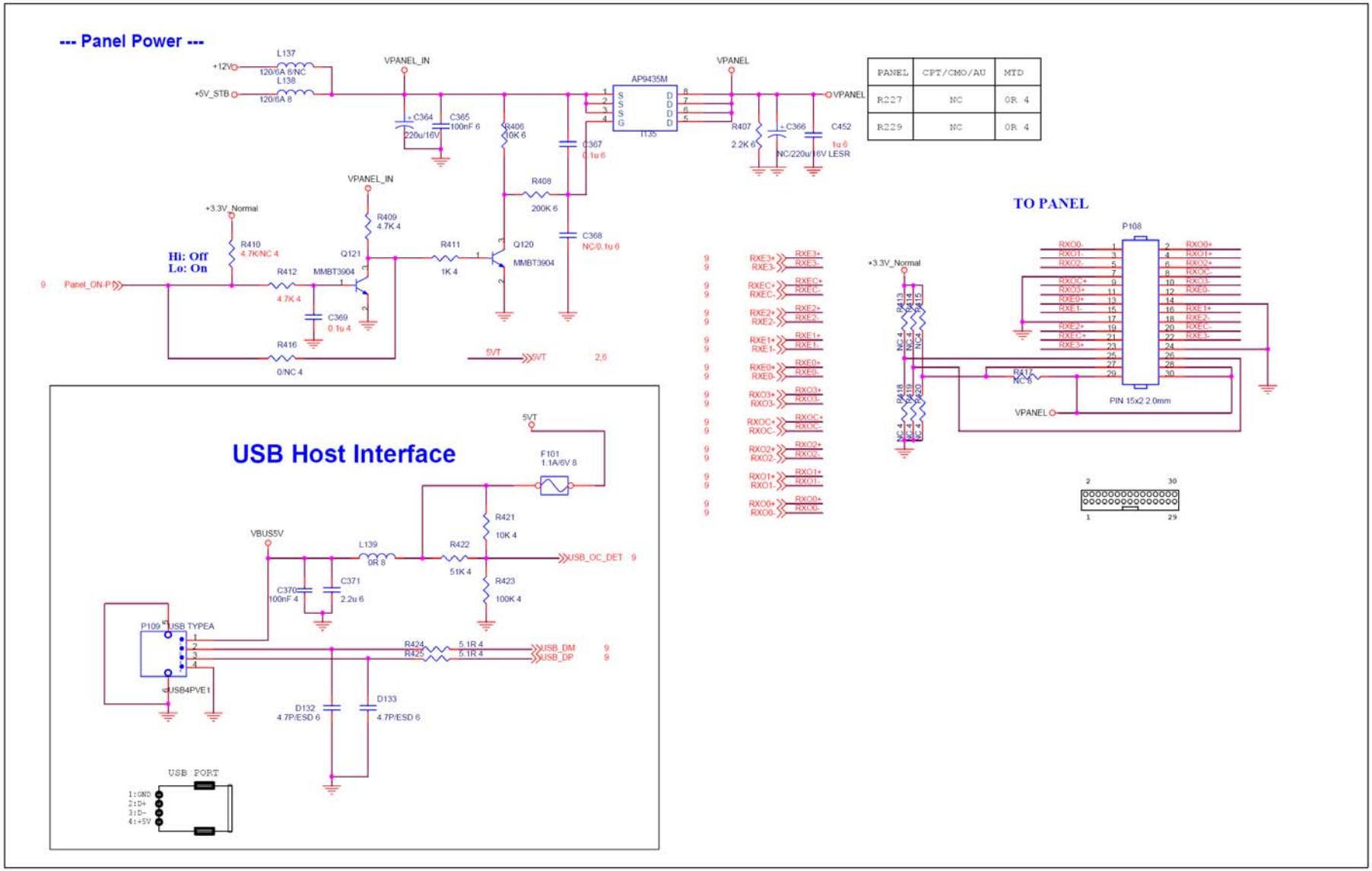

PANEL	CPT/CMO/AU	MTD
R227	NC	0R 4
R229	NC	0R 4

Video Interface

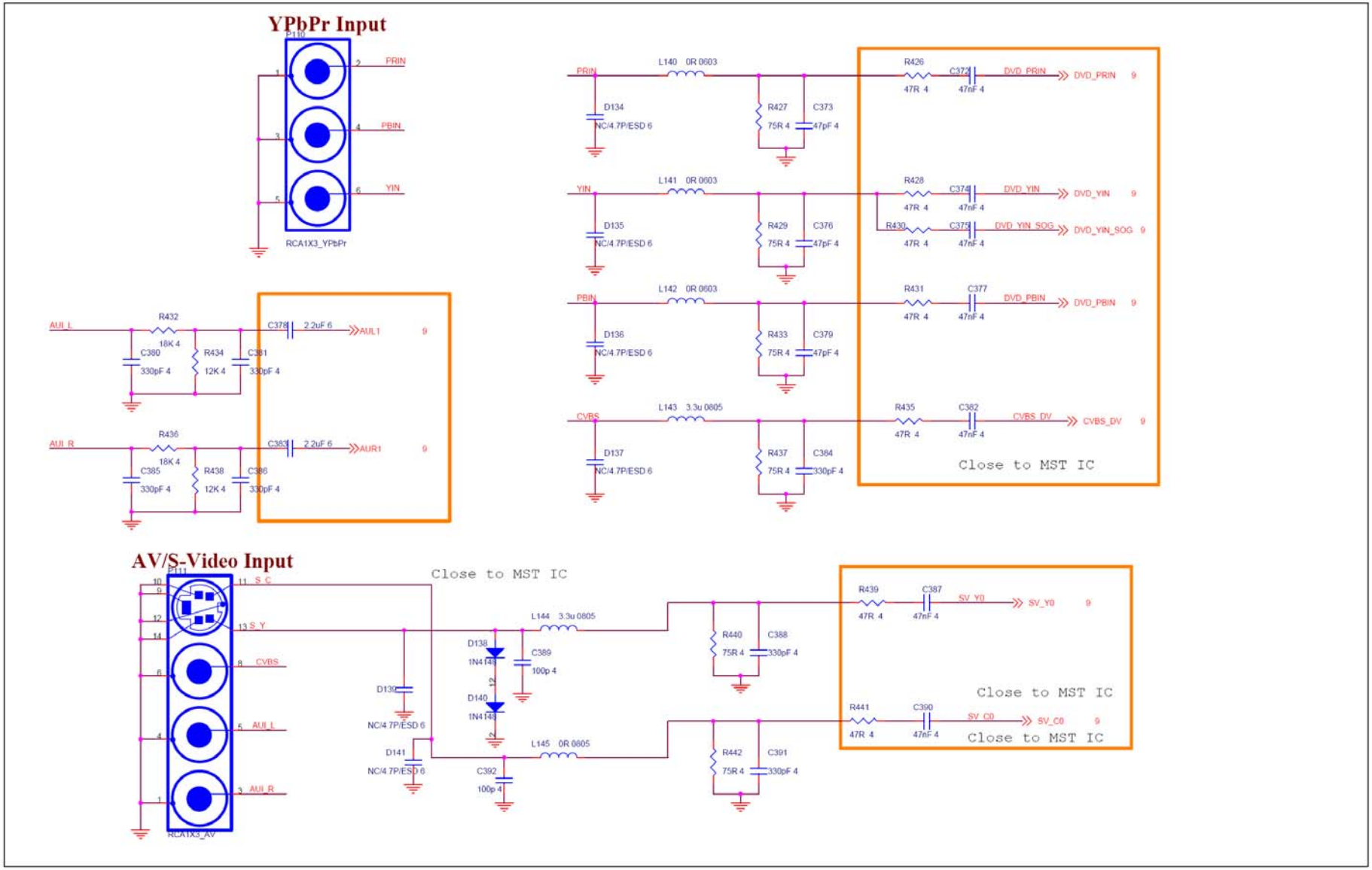

Audio Interface

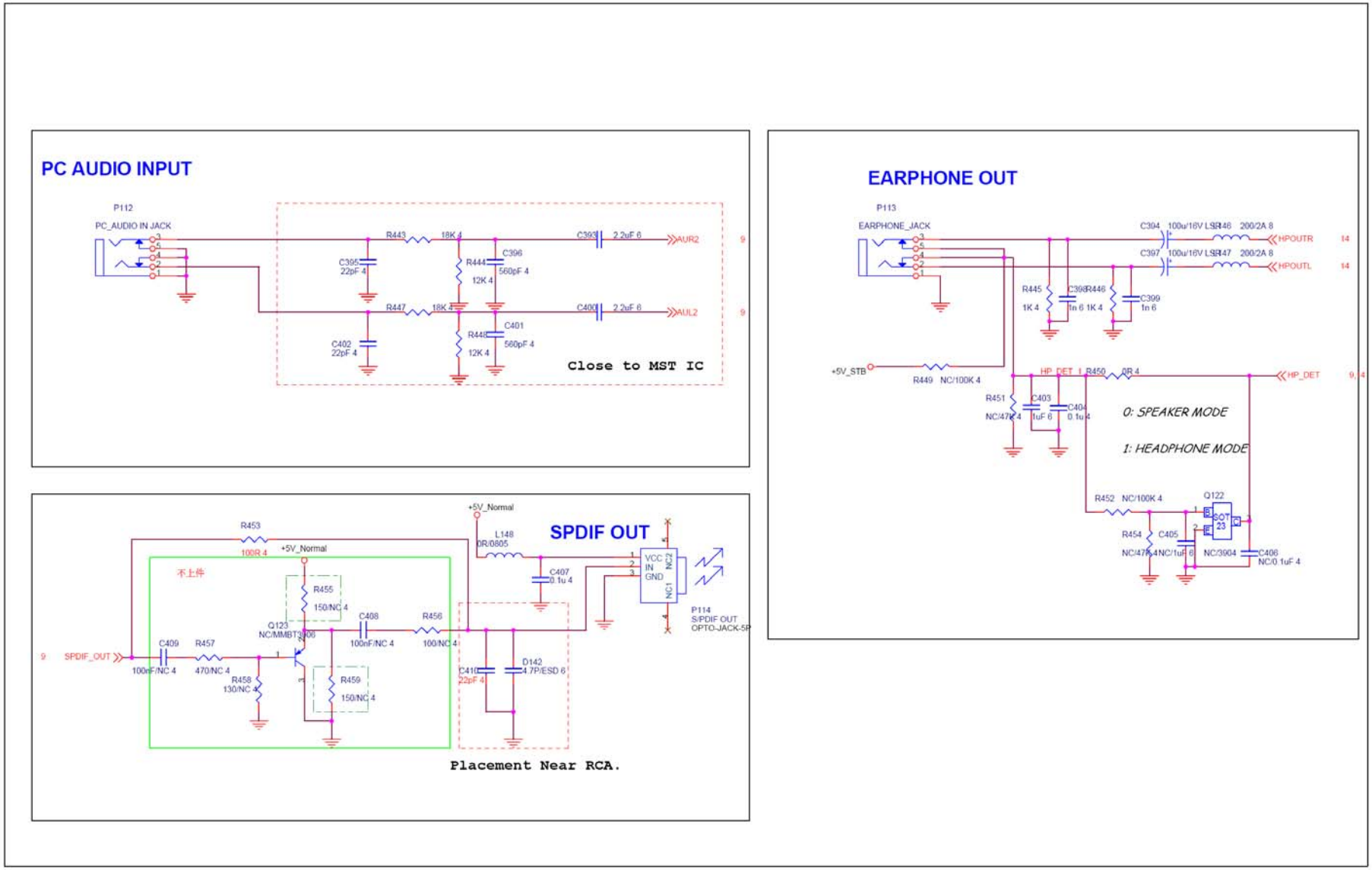

Audio AMP

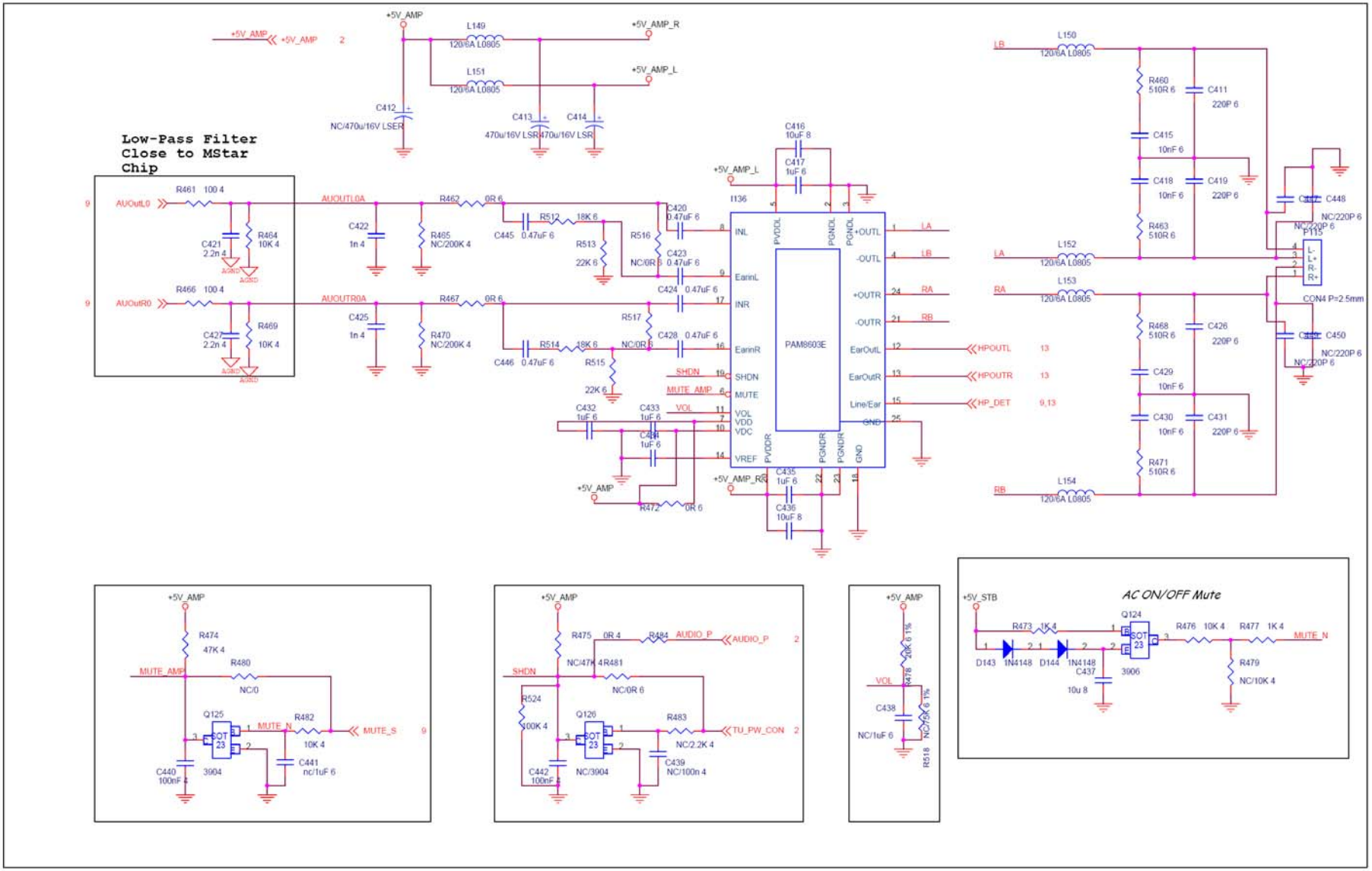

IR LED PAD

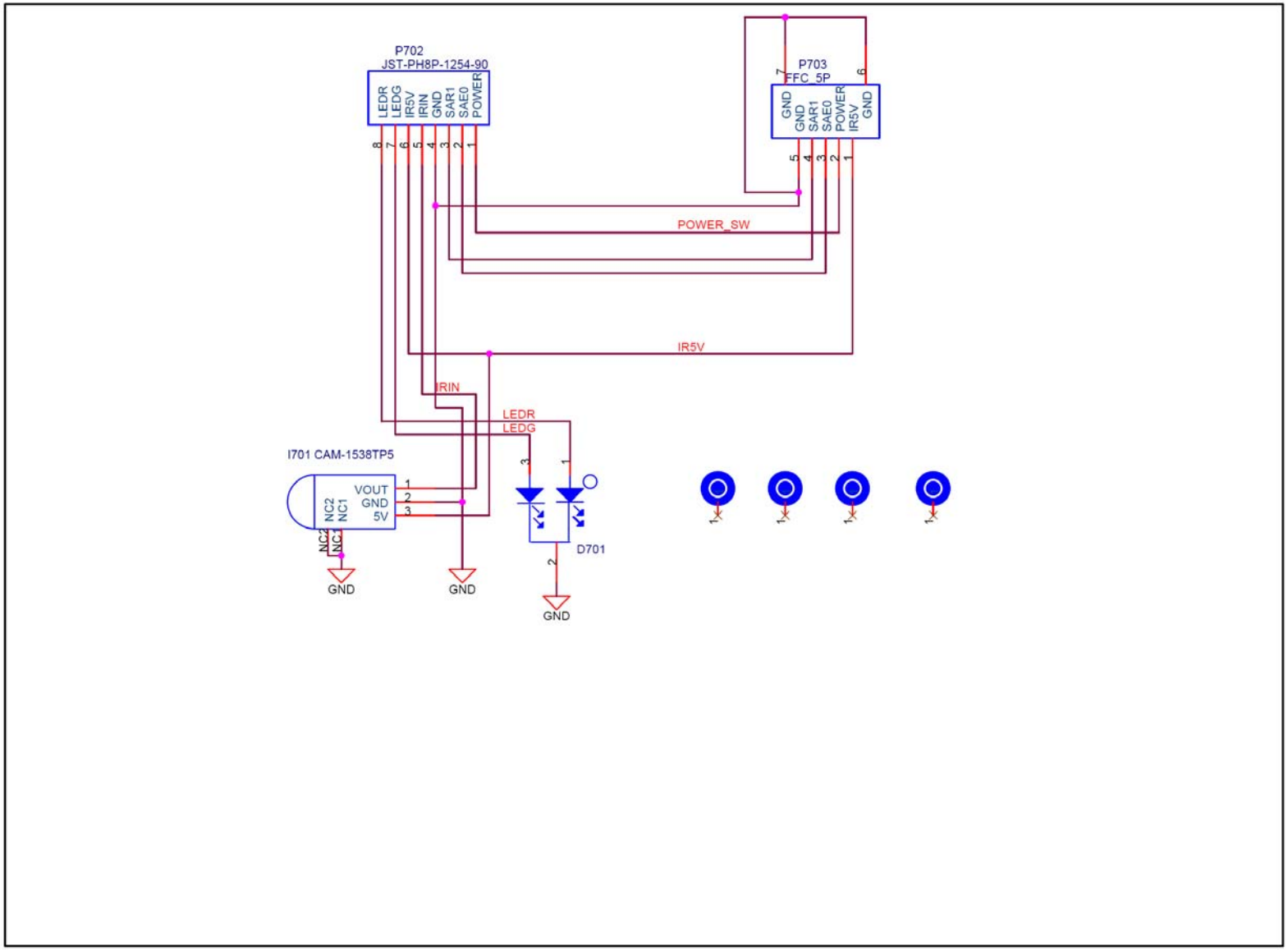
P702
JST-PH8P-1254-90
LEDR
LEDG
IR5V
IRIN
GND
SAR1
SAE0
POWER
P703
FFC_5P
GND
GND
SAR1
SAE0
POWER
IR5V
GND
POWER_SW
IR5V
IRIN
LEDR
LEDG
I701 CAM-1538TP5
VOUT
GND
5V
NC2
NC1
D701
GND
GND
GND

KEYPAD

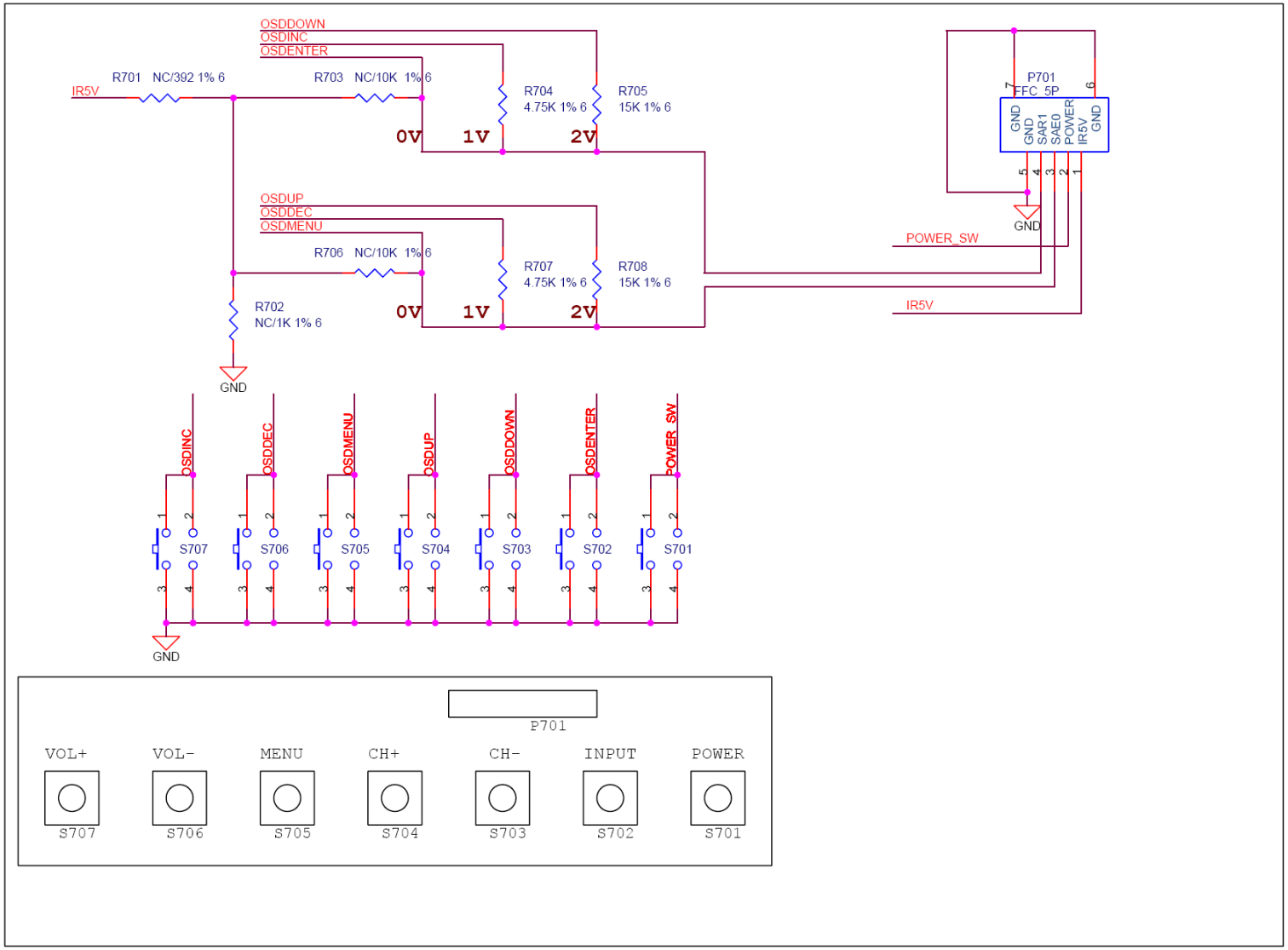
OSDDOWN
OSDINC
OSDENTER
IR5V
R701 NC/392 1% 6
R703 NC/10K 1% 6
R704
4.75K 1% 6
R705
15K 1% 6
0V
1V
2V
OSDUP
OSDDEC
OSDMENU
R706 NC/10K 1% 6
R707
4.75K 1% 6
R708
15K 1% 6
R702
NC/1K 1% 6
GND
P701
FFC_5P
GND
GND
SAR1
SAE0
POWER
IR5V
GND
POWER_SW
IR5V
OSDINC
OSDDEC
OSDMENU
OSDUP
OSDDOWN
OSDENTER
POWER_SW
S707
S706
S705
S704
S703
S702
S701
P701
VOL+
VOL-
MENU
CH+
CH-
INPUT
POWER

LED

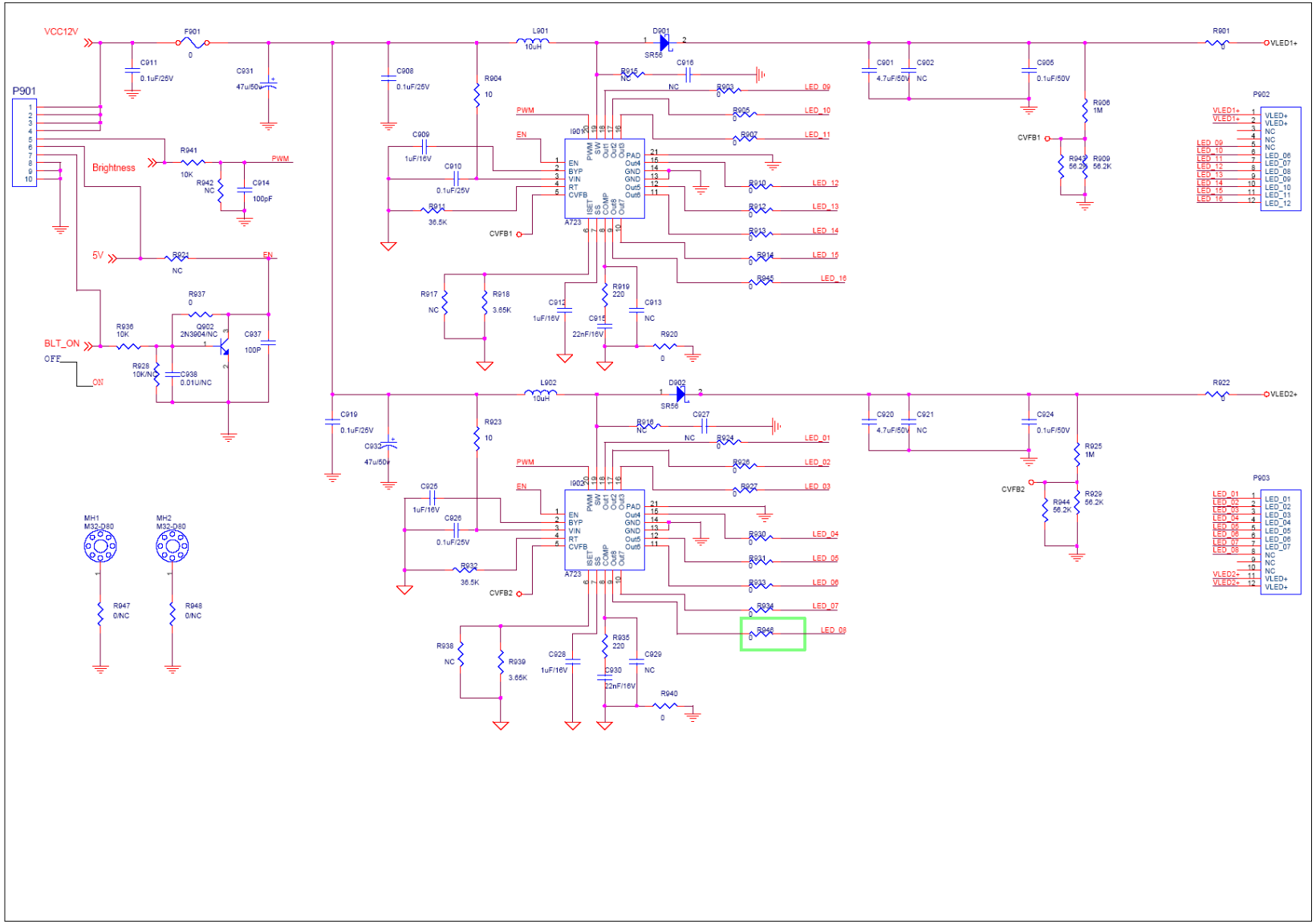
VCC12V
F901
C911
0.1uF/25V
C931
47u/50V
P901
Brightness
R941
10K
R942
NC
C914
100pF
PWM
5V
R924
NC
EN
R937
0
Q902
2N3904/NC
C937
100P
BLT_ON
OFF
ON
R936
10K
R928
10K/NC
C938
0.01U/NC
MH1
M32-080
MH2
M32-080
R947
0/NC
R948
0/NC
L901
10uH
D901
SR56
C908
0.1uF/25V
R904
10
C909
1uF/16V
C910
0.1uF/25V
R914
36.5K
CVFB1
I901
A723
R917
NC
R918
3.65K
C912
1uF/16V
R919
220
C913
NC
C915
22nF/16V
R920
0
R915
NC
C916
NC
R903
LED_09
R905
LED_10
R907
LED_11
R910
LED_12
R912
LED_13
R913
LED_14
R914
LED_15
R945
LED_16
C901
4.7uF/50V
C902
NC
C905
0.1uF/50V
R906
1M
R943
56.2K
R909
56.2K
R901
VLED1+
P902
VLED1+
LED_09
LED_10
LED_11
LED_12
LED_13
LED_14
LED_15
LED_16
VLED+
NC
LED_08
LED_07
LED_09
LED_10
LED_11
LED_12
L902
10uH
D902
SR56
C919
0.1uF/25V
C933
47u/50V
R923
10
C926
1uF/16V
C926
0.1uF/25V
R932
36.5K
CVFB2
I902
A723
R938
NC
R939
3.65K
C928
1uF/16V
R935
220
C929
NC
C930
22nF/16V
R940
0
R916
NC
C927
NC
R934
LED_01
R926
LED_02
R927
LED_03
R930
LED_04
R931
LED_05
R933
LED_06
R934
LED_07
R946
LED_08
C920
4.7uF/50V
C921
NC
C924
0.1uF/50V
R925
1M
R944
56.2K
R929
56.2K
R922
VLED2+
P903
LED_01
LED_03
LED_04
LED_05
LED_06
LED_07
LED_08
VLED2+
NC
LED_02
LED_03
LED_04
LED_05
LED_06
LED_07
VLED+

Power

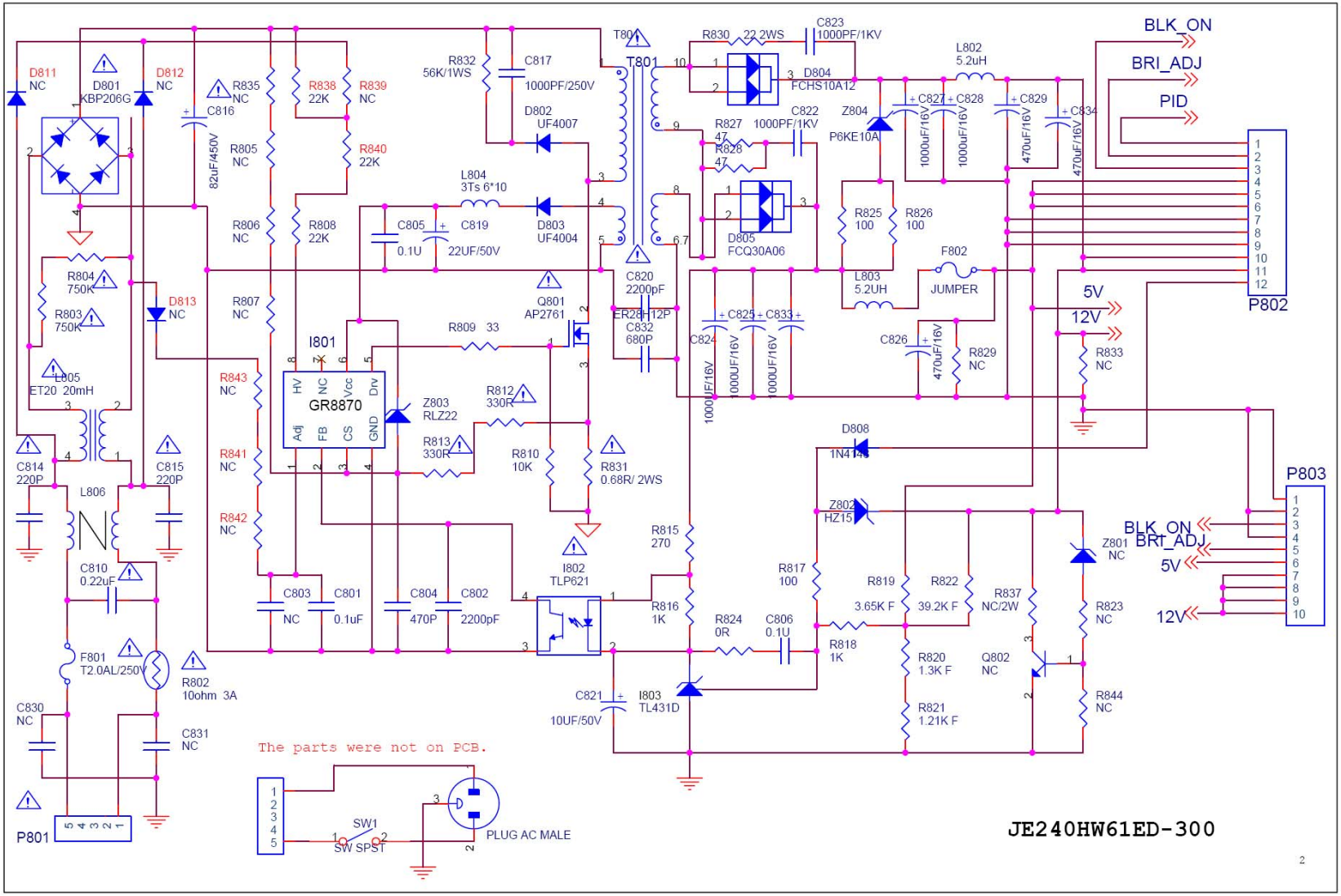
D811
NC
D801
KBP206G
D812
NC
R835
NC
C816
82uF/450V
R838
22K
R839
NC
R840
22K
R805
NC
R806
NC
R808
22K
R807
NC
R804
750K
R803
750K
D813
NC
L805
ET20 20mH
C814
220P
C815
220P
L806
C810
0.22uF
F801
T2.0AL/250V
R802
10ohm 3A
C830
NC
C831
NC
P801
R832
56K/1WS
C817
1000PF/250V
D802
UF4007
L804
3Ts 6*10
D803
UF4004
C805
0.1U
C819
22UF/50V
T801
C820
2200pF
ER28-12P
C832
680P
Q801
AP2761
R809 33
I801
GR8870
HV
NC
Vcc
Drv
Adj
FB
CS
GND
Z803
RLZ22
R812
330R
R813
330R
R810
10K
R831
0.68R/ 2WS
R843
NC
R841
NC
R842
NC
C803
NC
C801
0.1uF
C804
470P
C802
2200pF
I802
TLP621
R815
270
R816
1K
R824
0R
C806
0.1U
C821
10UF/50V
I803
TL431D
R830 22.2WS
C823
1000PF/1KV
D804
FCHS10A12
R827 47
R828 47
C822 1000PF/1KV
D805
FCQ30A06
Z804
P6KE10A
L802
5.2uH
C827
C828
C829
C834
1000uF/16V
470uF/16V
R825
100
R826
100
L803
5.2UH
F802
JUMPER
C825
C833
C824
C826
R829
NC
R833
NC
D808
1N4148
Z802
HZ15
R817
100
R818
1K
R819
3.65K F
R822
39.2K F
R837
NC/2W
R820
1.3K F
R821
1.21K F
Q802
NC
Z801
NC
R823
NC
R844
NC
BLK_ON
BRI_ADJ
PID
5V
12V
P802
P803
BLK_ON
BRI_ADJ
5V
12V
The parts were not on PCB.
SW1
SW SPST
PLUG AC MALE
JE240HW61ED-300

RS232

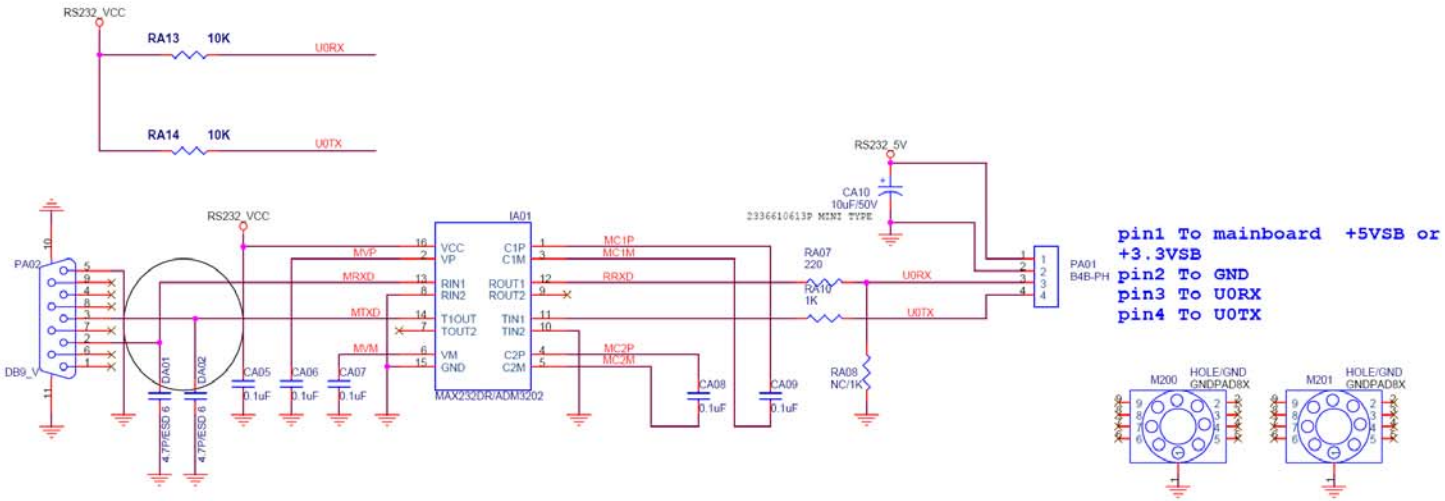

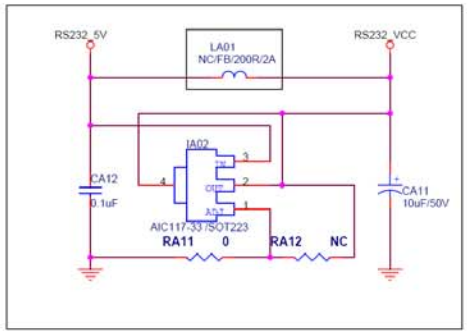

	ADM3202	MAX232DR
LA01	NC	FB/200R/2A
RA08	NC	1K
RA11	0	NC
RA12	NC	NC
IA02	AIC117-33 /SOT223	NC
CA11	10uF/50V	NC

PCB Artwork

MAIN PCB TOP VIEW

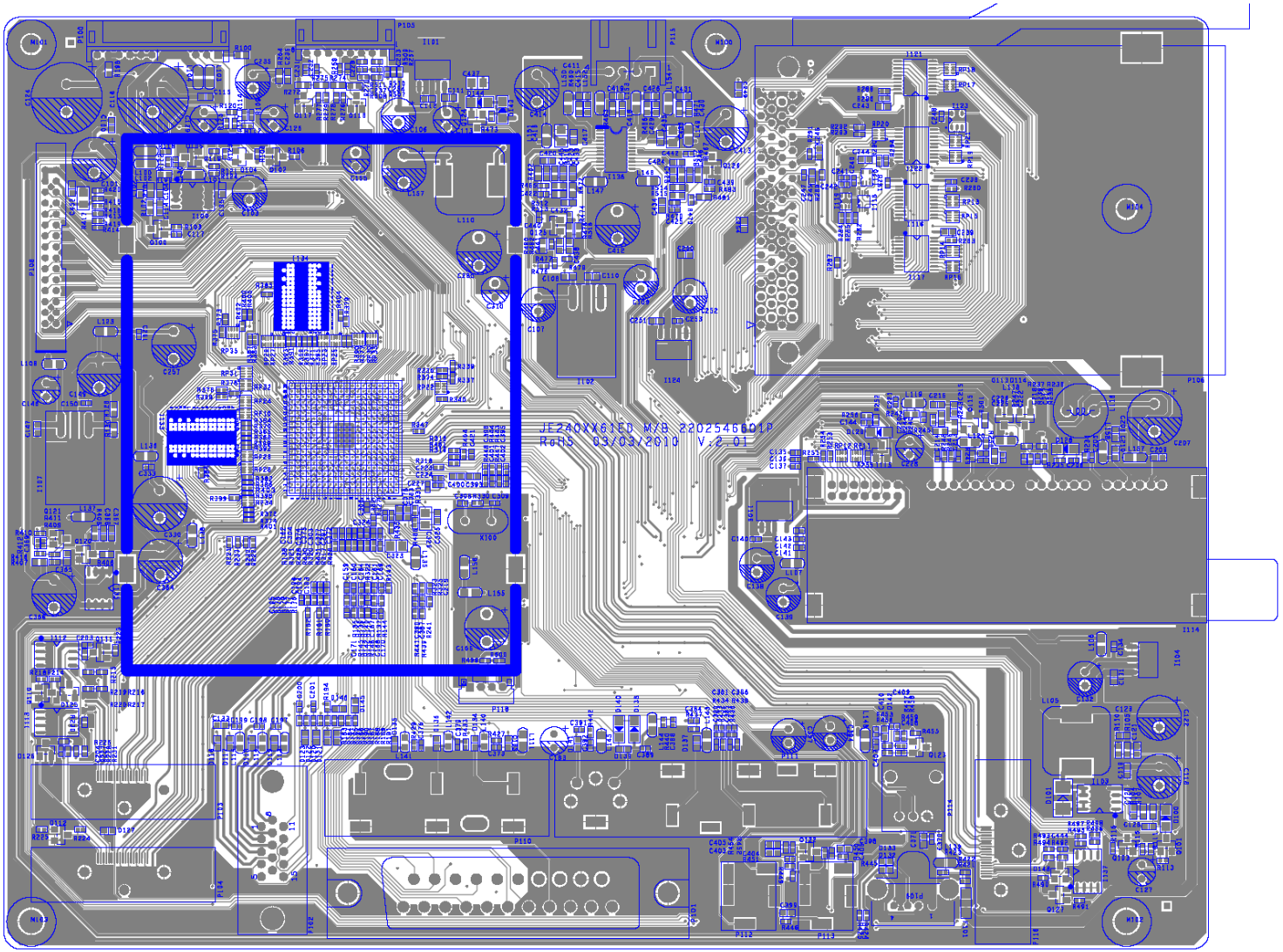

MAIN PCB BOTTOM VIEW

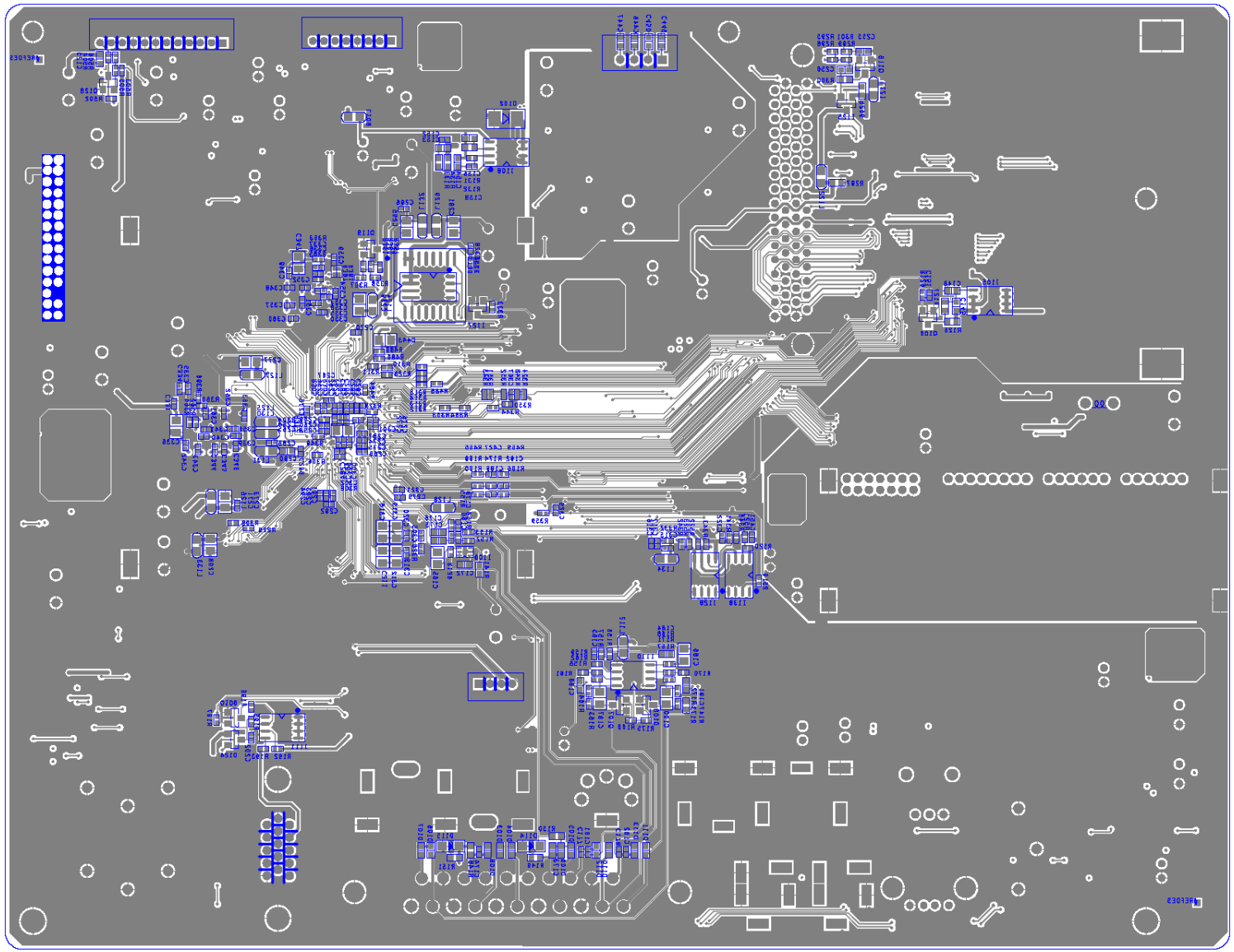

KEYPAD PCB TOP VIEW

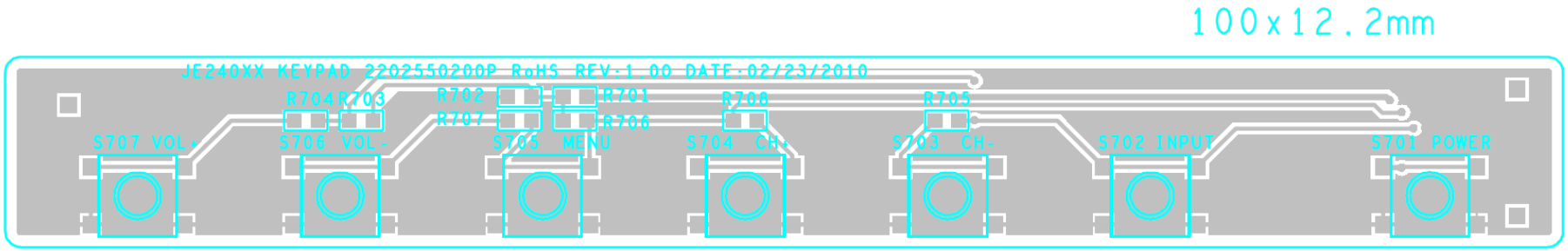

KEYPAD PCB BOTTOM VIEW

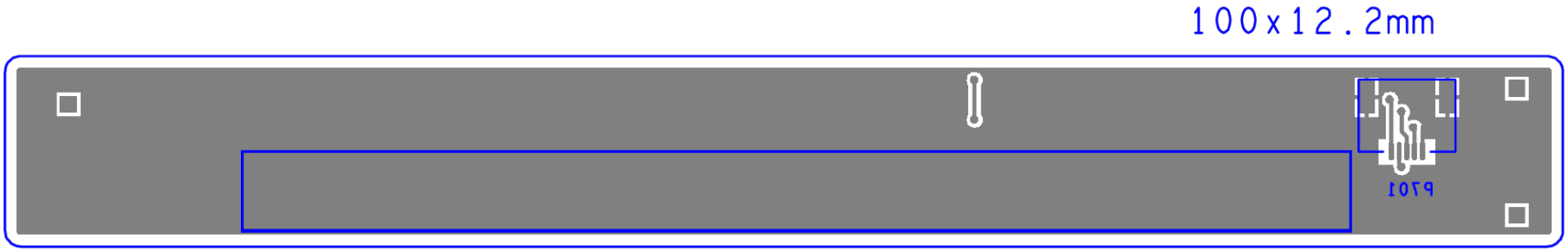

IR PCB TOP VIEW

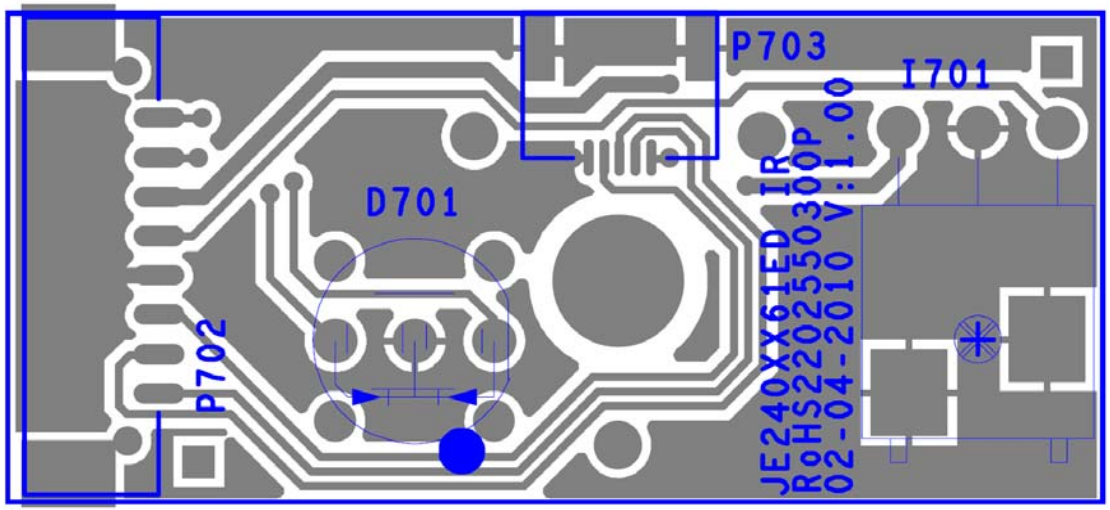

IR PCB BOTTOM VIEW

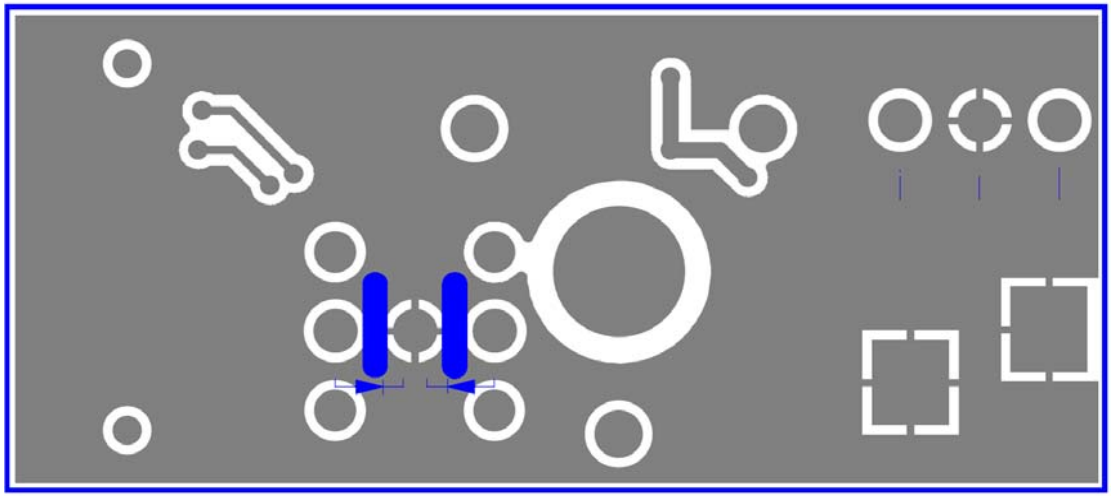

POWER PCB TOP VIEW

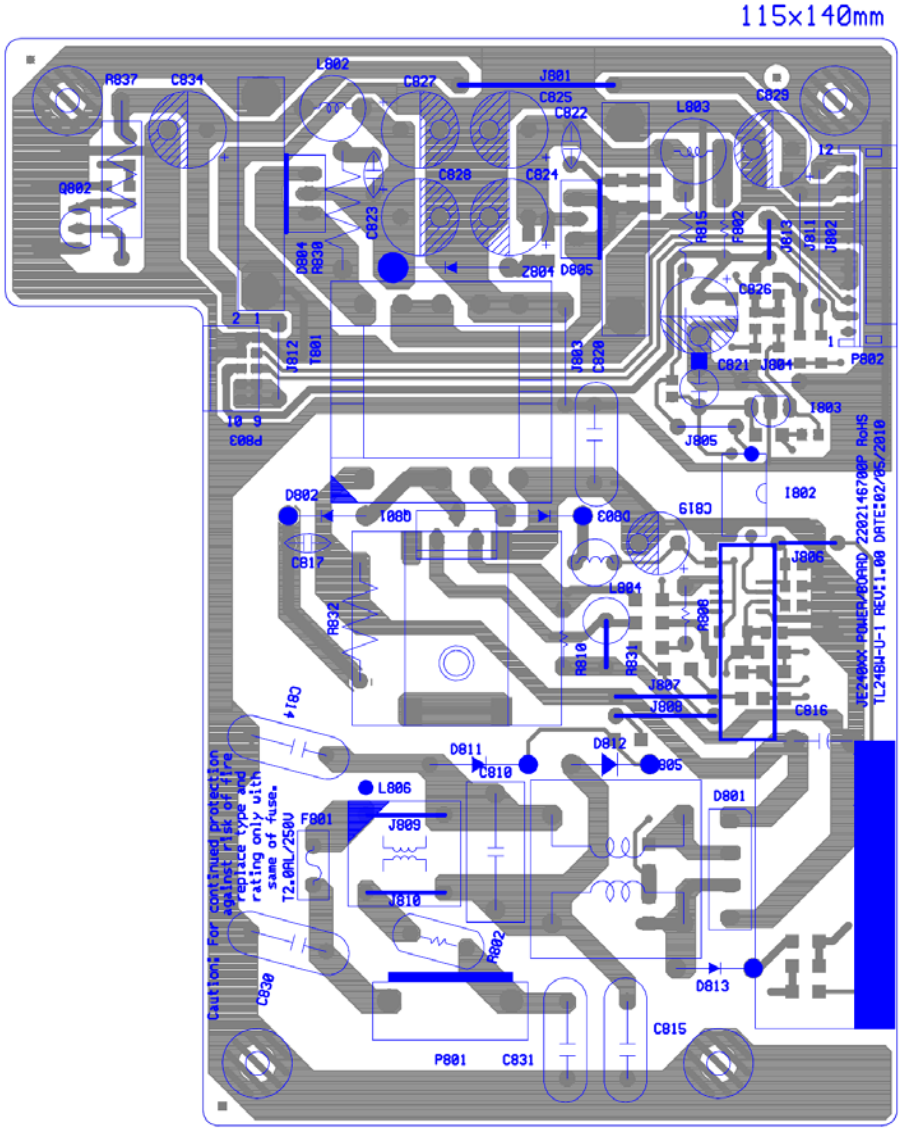

POWER PCB BOTTOM VIEW

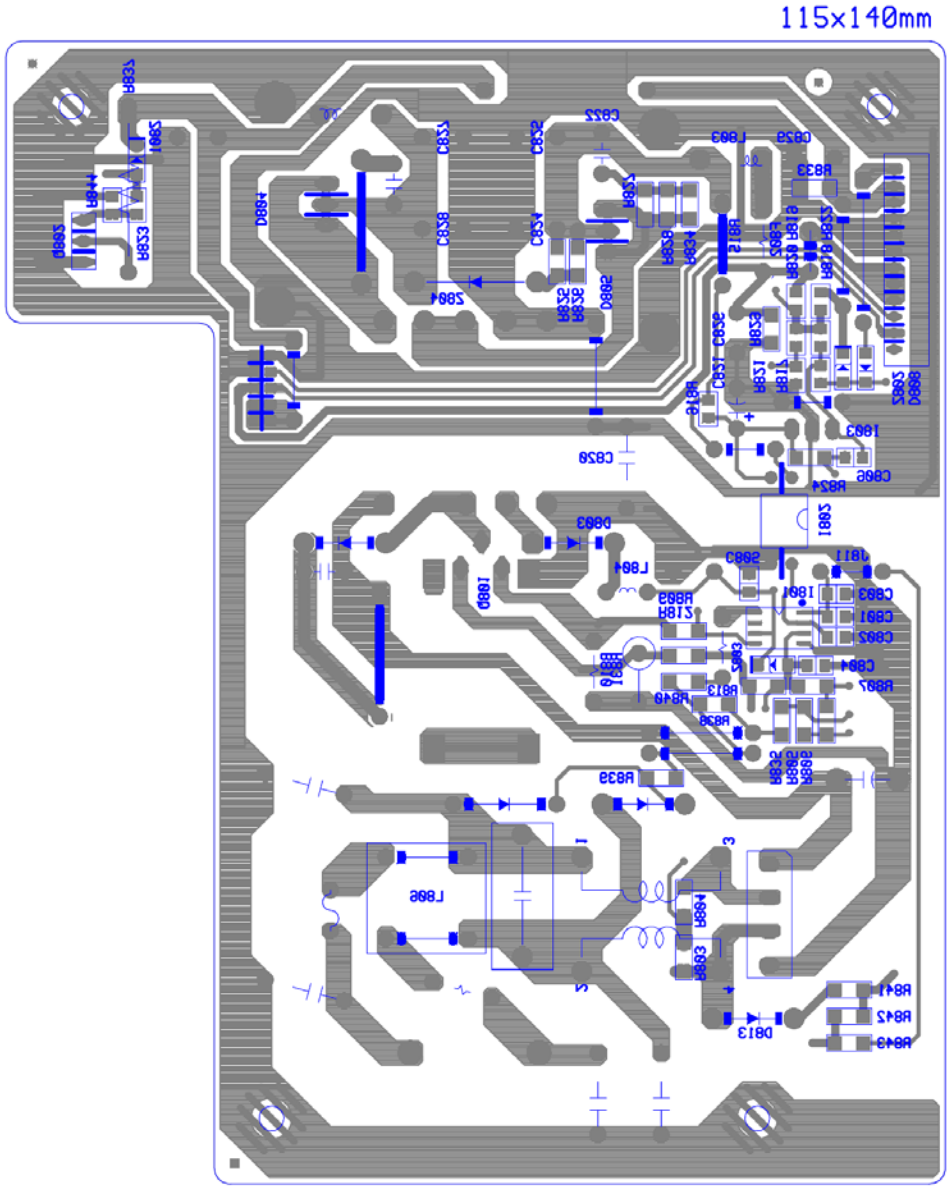

LED Driver PCB TOP VIEW

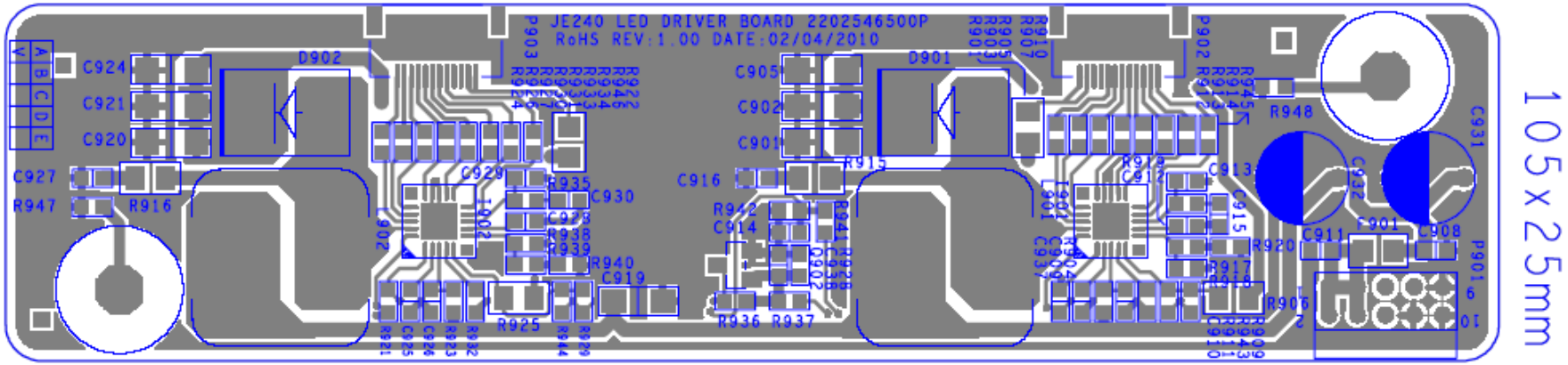

LED Driver PCB BOTTOM VIEW

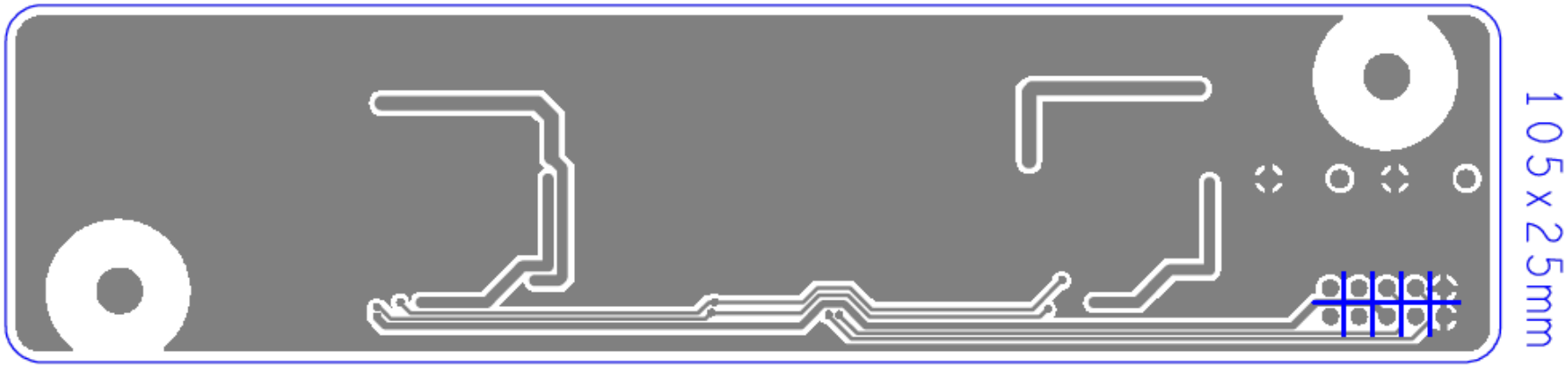

RS232 PCB TOP VIEW

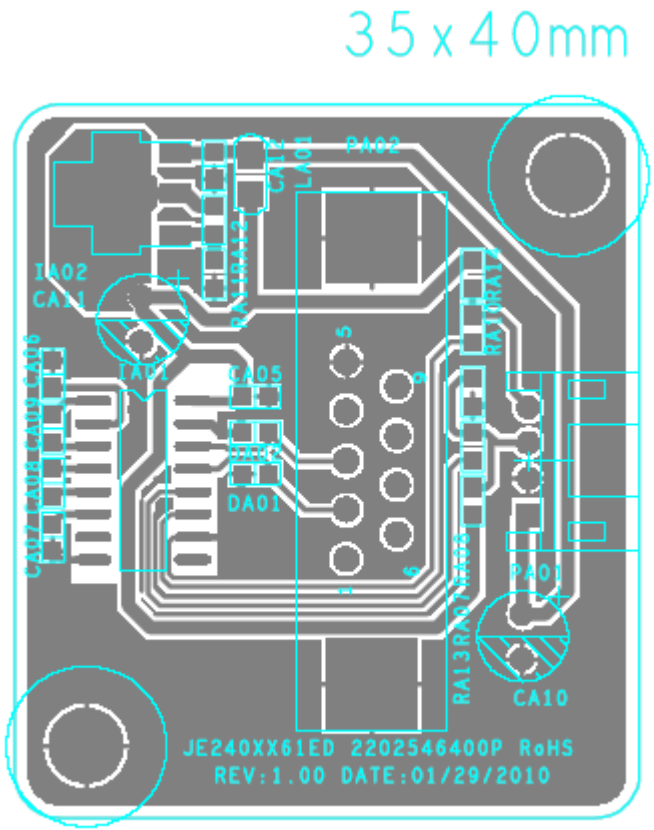

RS232 PCB BOTTOM VIEW