S/M NO : SL19M1W001

Service Manual
LCD TV 19"

Model : DSL-19M1WC

Caution
: In this Manual, some parts can be changed for improving. their performance without notice in the parts list. So, if you need the latest parts information, please refer to PPL(Parts Price List)in Service Information Center.

DAEWOO ELECTRONICS

MAR.2007

DSL-19M1WC SERVICE MANUAL

CONTENT

PART 1：Brief Introduction Of The DSL-19M1WC
- ★Schematic Diagram
- ★Printed Circuit

PART 2：Exploded view

PART 3：Key Ics And Assemblies

PART 4：Detailed Circuit
- ★Main Board
- ★DVD Board
- ★HI-voltage Board

PART 5：Parts List

Part 1 Brief Introduction Of The DSL-19M1WC

Schematic Diagram

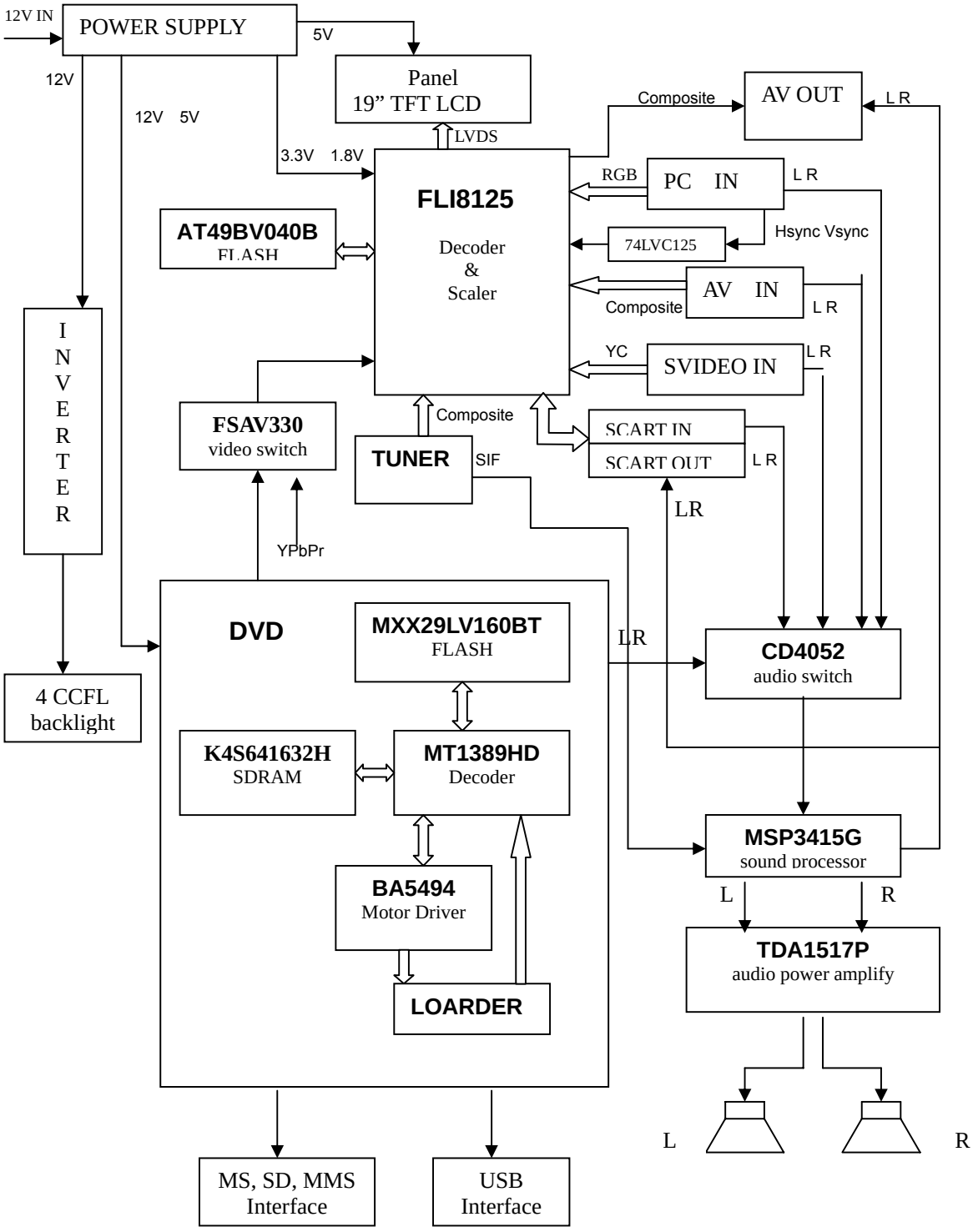

Printed Circuit

Main board 3768C(Top layer view)

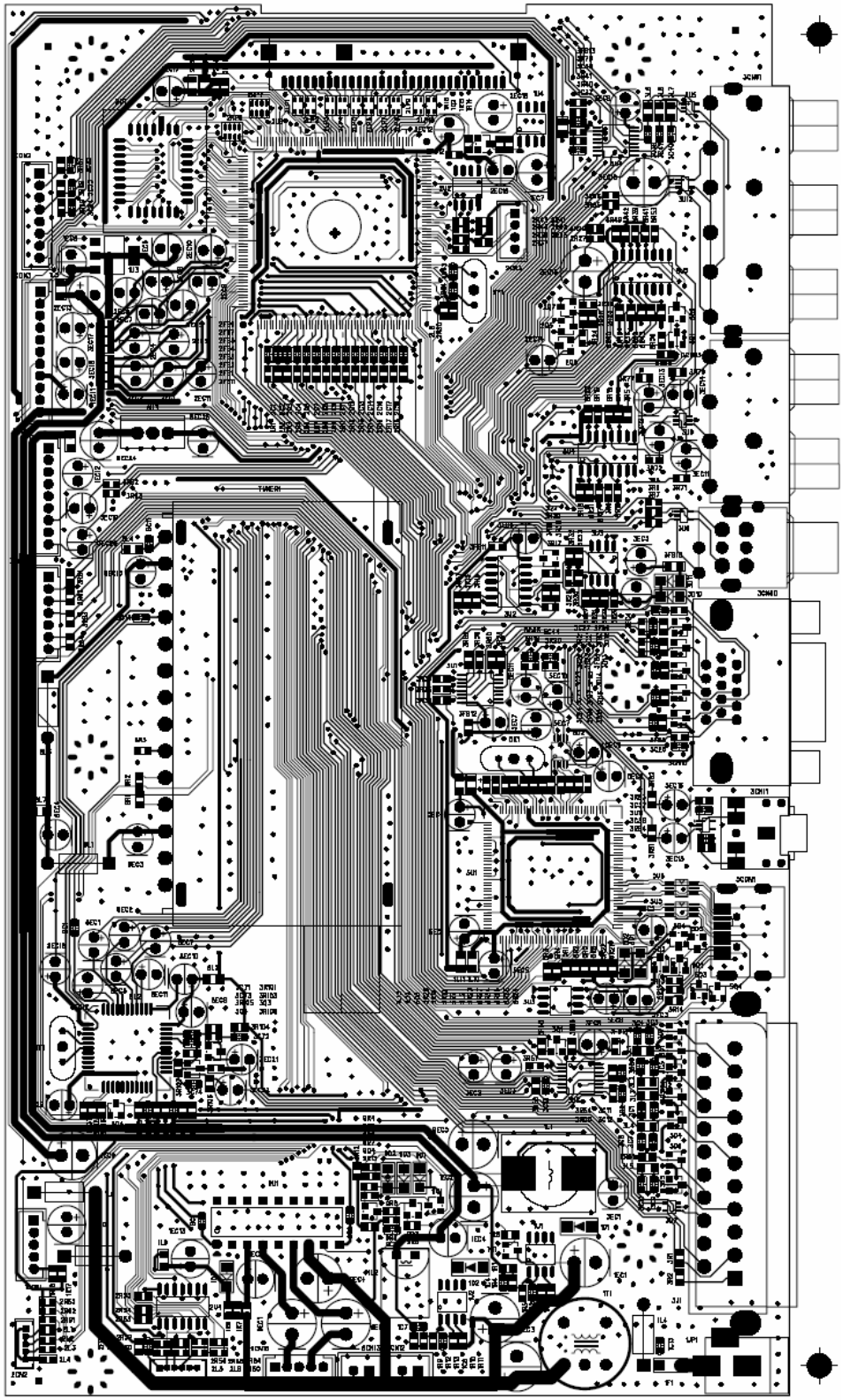

Main board 3768C (Bottom layer view)

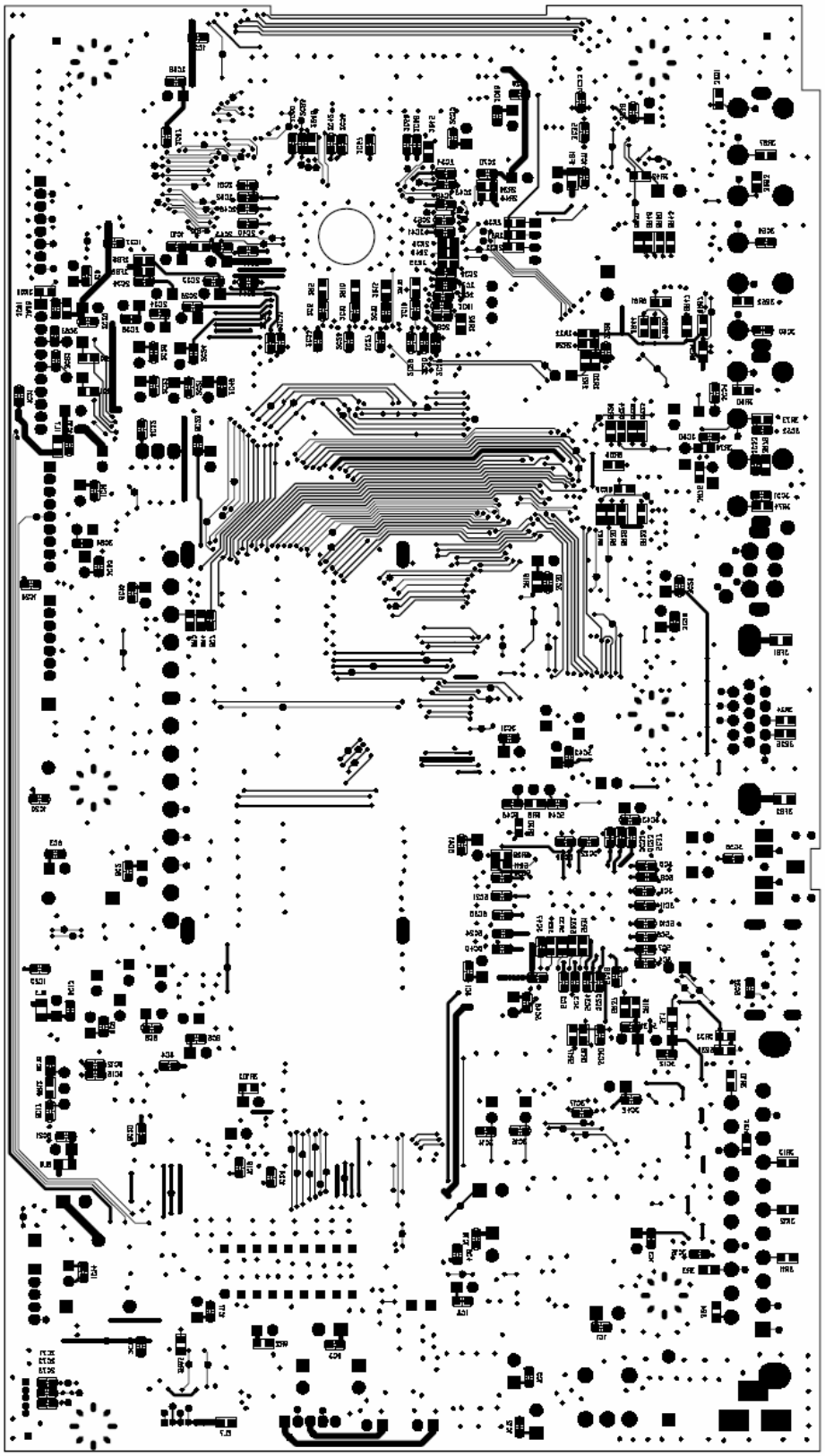

DVD board 3769C(Top layer view)

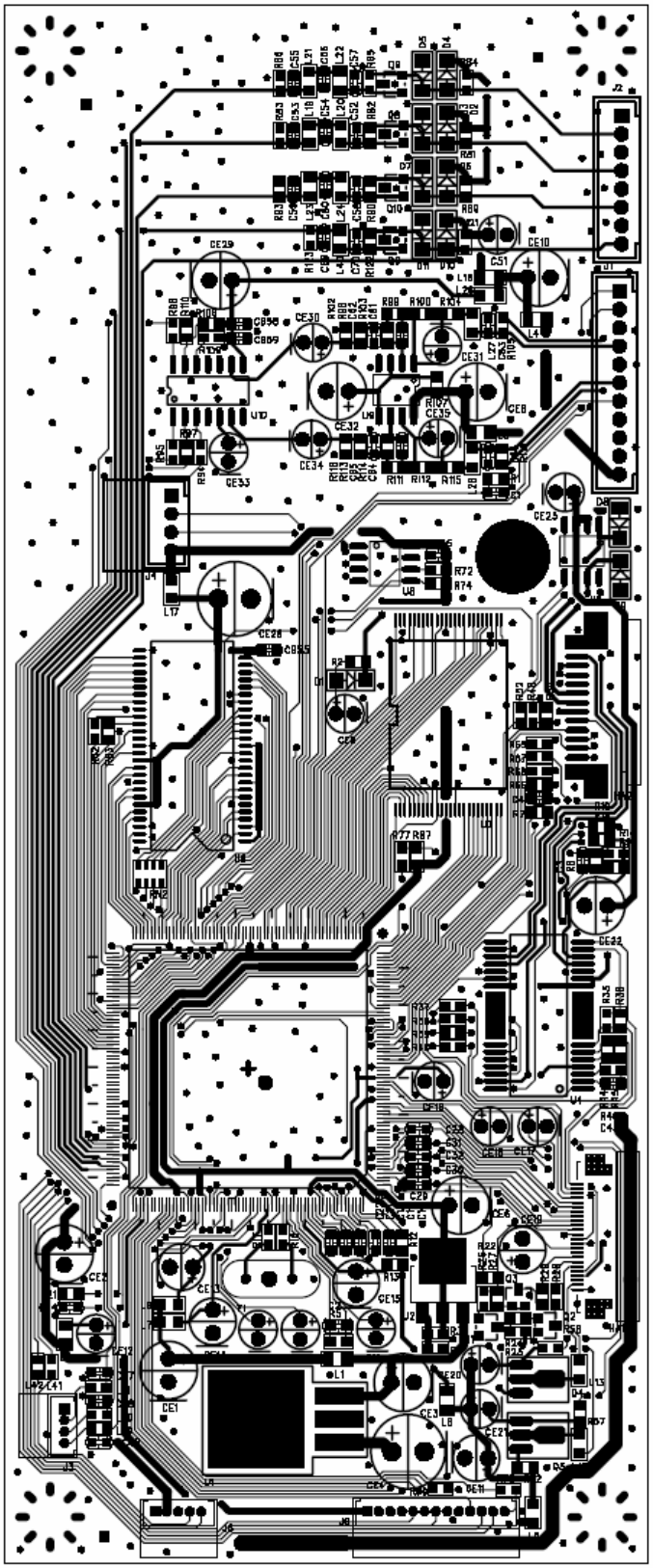

DVD board 3769C (Bottom layer view)

HI-voltage Board 3678C(Top layer view)

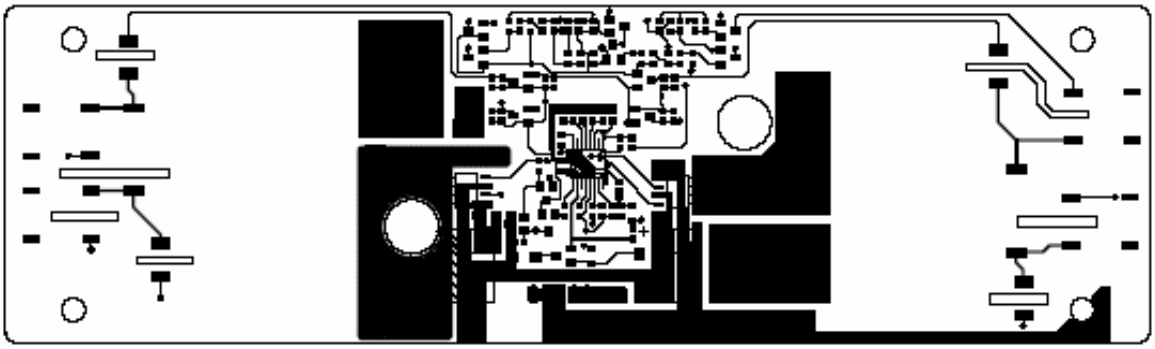

HI-voltage Board 3678C(Bottom layer view)

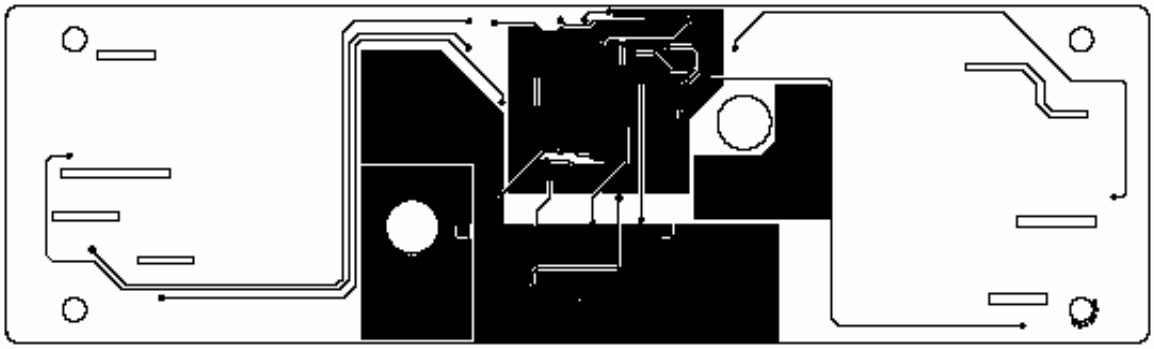

SD card board3773C(Top layer view)

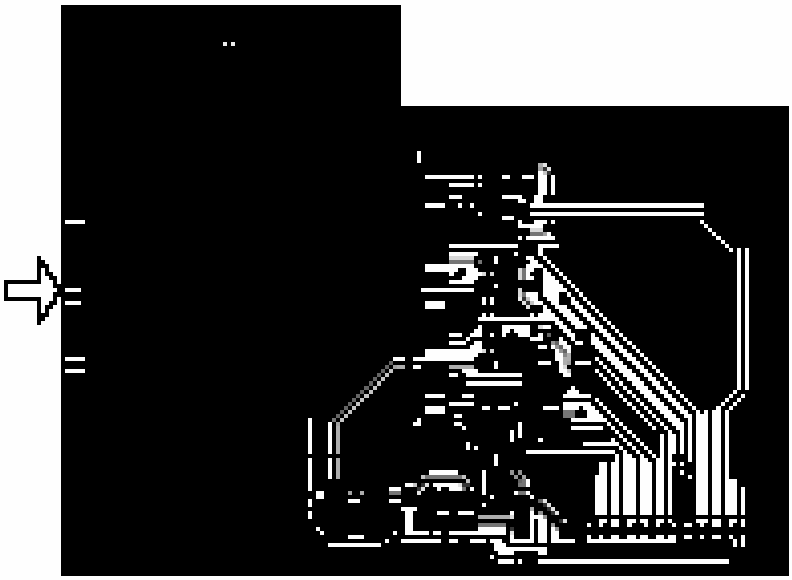

SD card board3773C(Bottom layer view)

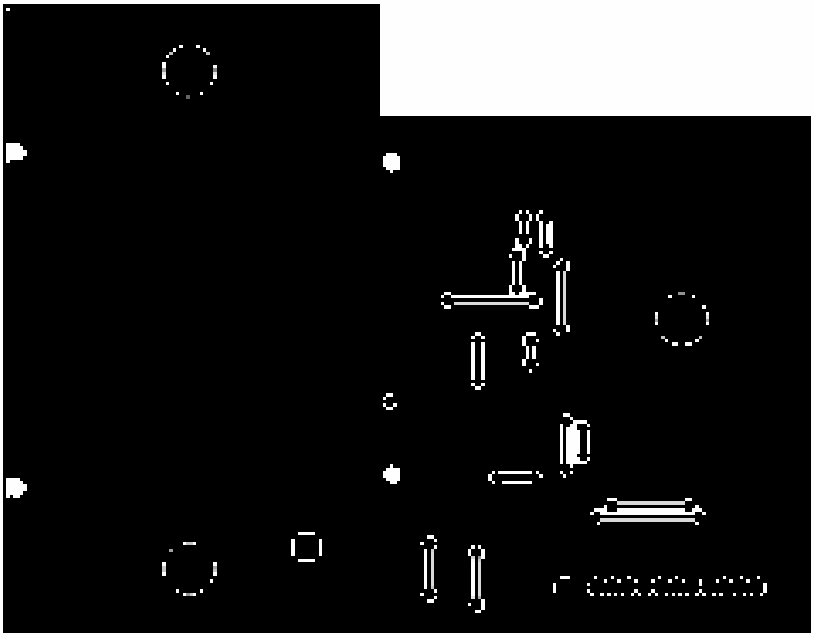

Earphone board3772C(Top layer view)

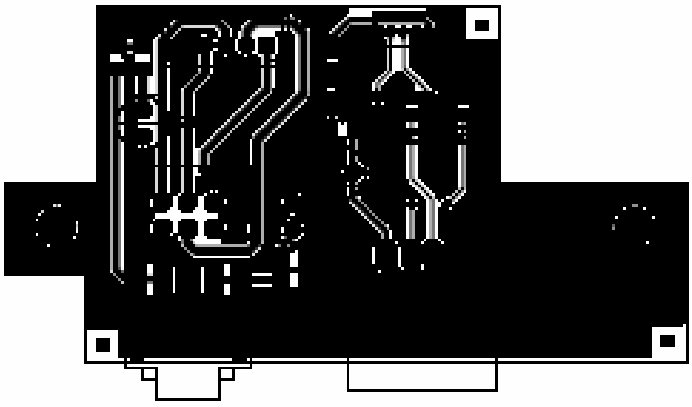

Earphone board3772C(Bottom layer view)

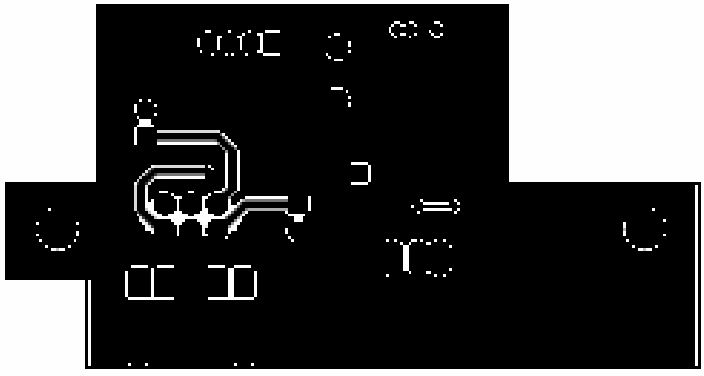

Remote control head board3921C(Top layer view)

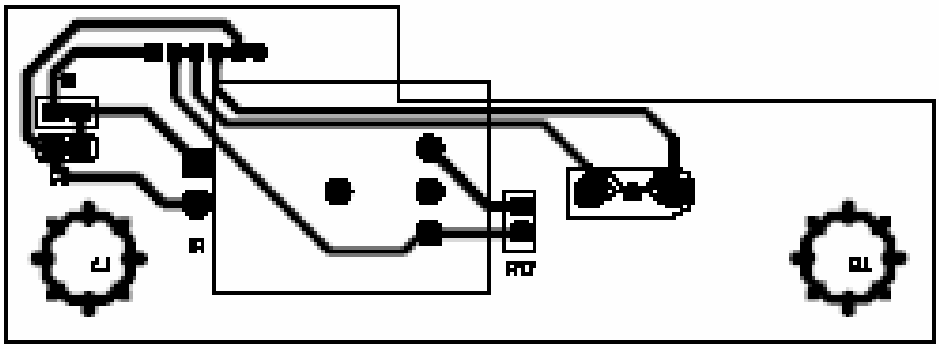

Remote control head board3921C(Bottom layer view)

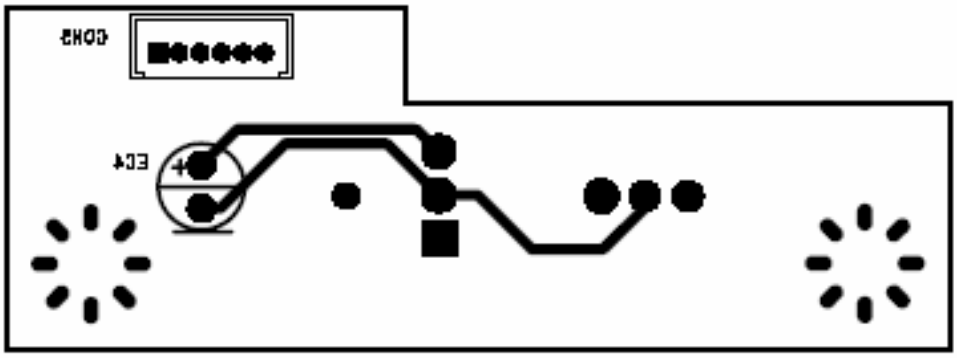

Part2 Exploded view

DSL-19M1WC Exploded view

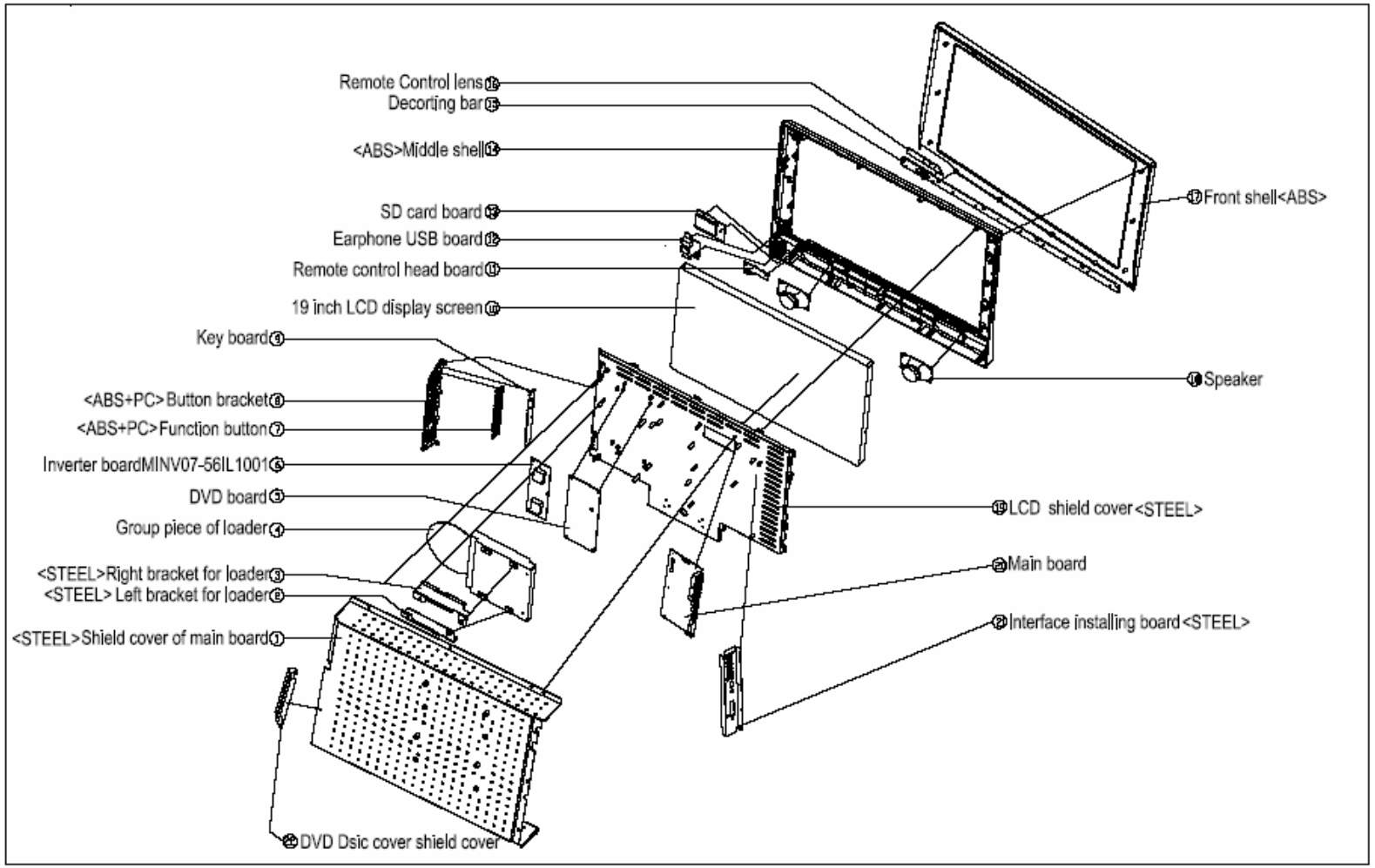

Part 3 Key ICs And Assemblies

On Main Board			On DVD board		
Serial No	Position	Type	Serial no	Position	Type
1	3U4	FSAV330	1	U1	BA033T
2	8U3	L7808C-V	2	U2	LM1117
3	2U1	AT49BV040B	3	U3	MT1389HD
4	2U3	FLI8125	4	U4	BA5954
5	1U4	FDS9435A	5	U5	BA6208F
6	1U1	AP1510	6	U6	HY57V641620HGT
7	2U2	AT24C32A	7	U7	MX29LV160BT
8	1U2	AP1513S	8	U8	AT24C16
9	8U4	CD4052	9	U9	NJM4558
10	8U2	MSP3415G	10	U10	WM8714
11	9U1	TDA1517P			
12	3U5 3U6 3U7 3U11 3U12	PESD5VOL4U			
13	1U3	LM1117			
14	3U9	PESD5V0L5			
15	2U4	74LVC125			
On HI-voltage Board					
1	IC1	Bit3193			
2	Q7,Q8	AP4511M			

ICS ON MAIN BOARD

1. FSAV330

Low On Resistance Quad SPDT Wide Bandwidth Video Switch

General Description

The Fairchild Video Switch FSAV330 is a quad single pole/double throw high-speed CMOS TTL-compatible video switch. The low On Resistance of the switch allows inputs to be connected to outputs without adding propagation delay or generating additional ground bounce noise.

When $\overline{OE}$ is LOW, the select pin connects the A Port to the selected B Port output. When $\overline{OE}$ is HIGH, the switch is OPEN and a high-impedance state exists between the two ports.

Features

- Replacement for the P15V330
- Wide bandwidth 180 MHz
- 4Ω switch connection between two ports
- Minimal propagation delay through the switch
- Low I_{CC}
- Zero bounce in flow-through mode
- Control inputs compatible with TTL level

Ordering Code:

Order Number	Package Number	Package Description
FSAV330M	M16A	16-Lead Small Outline Integrated Circuit (SOIC), JEDEC MS-012, 0.150" Narrow
FSAV330QSC	MQA16	16-Lead Quarter Size Outline Package (QSOP), JEDEC MO-137, 0.150" Wide
FSAV330MTC	MTC16	16-Lead Thin Shrink Small Outline Package (TSSOP), JEDEC MO-153, 4.4mm Wide

Device also available in Tape and Reel. Specify by appending suffix letter "X" to the ordering code.

Logic Diagram

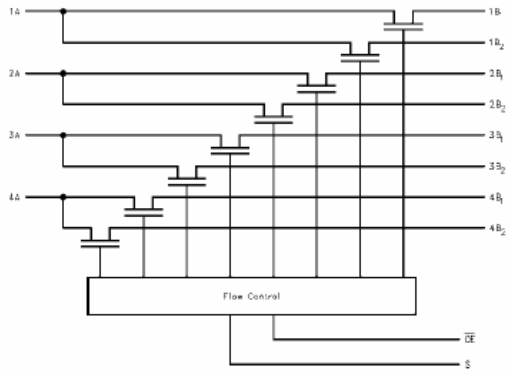

Connection Diagram

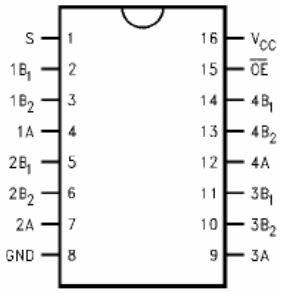

Pin Descriptions

Pin Name	Description
$\overline{OE}$	Bus Switch Enable
S	Select Input
A	Bus A
B_1–B_2	Bus B

Truth Table

S	$\overline{OE}$	Function
X	H	Disconnect
L	L	A = B_1
H	L	A = B_2

2. FLI8125

The FLI8125 is a cost-effective, highly-integrated, mixed signal solution for TV and Digital Video applications. It incorporates a multi-standard video decoder, high-speed triple 8-bit Analog-to-Digital Converter(ADC),and front end switching. An integrated VBI Slicer adds Closed Captioning(CC) and Teletext service support, and the built-in microprocessor enables full system control without external devices.

Features

INTEGRATED TRIPLE ADC

- RGB / YPbPr support up to 135MHz
- SCART – RGB + Fast Blank support
- Interlaced and progressive scan
- External OSD support

DIGITAL INPUT PORT

- 24-bit re-configurable input port

INTEGRATED 2D VIDEO DECODER

- Worldwide NTSC/PAL/SECAM support
- Macrovision / VCR trick mode support

EMBEDDED MICROPROCESSOR

- Turbo 186 core
- Internal RAM / ROM
- Serial Flash / Parallel ROM support
- 2-wire slave controller, UART support
- Internal RESET Controller
- GPIOs , Low Bandwidth ADC – 6 input
- Infra-red Interface

SCALING ENGINE

- Independent H & V scaling factors
- 4:2:2 YPbPr or 4:4:4 RGB scaling
- Anamorphic scaling (non-linear)

FAROUDJA DCDI – EDGE™

- Edge Correction
  - – Eliminates objectionable stair-casing
  - – Enhances clarity and realism
- Horizontal Enhancement
- Adaptive Contrast and Color (ACC)
- Active Color Management - II (ACM-II)

DIGITAL OUTPUT

- 18/24-bit 85Mhz TTL output
- Dual LVDS up to SXGA
- Energy Spectrum Management for reducing EMI
- Programmable CLUT for gamma correction

OSD CONTROLLER

- Up to 4 windows: 1, 2 or 4-bits per pixel color
- Programmable Font scalar to meet Teletext requirements

VBI SLICER

- V-Chip, Closed Captioning, XDS, CGMS, WSS decode
- Teletext 1.5 support

JTAG SUPPORT

- Boundary Scan support

• **PInput**

• **Pin List**

I/O Legend: A = Analog, **I** = Input, **O** = Output, **P** = Power, **G**= Ground

Table 1: Analog Input Port

Pin Name	No.	I/O	Description
VDD18_AB	158	AP	Analog Power (1.8V) for A & B Channels. Must be bypassed with 0.1uF capacitor to the analog system ground plane.
NC	159		No Connection. Leave this pin open for normal operation.
GND18_C	160	AG	Analog Ground (1.8V Return) for C channel. Must be directly connected to the analog system ground plane on board.
VDD18_C	161	AP	Analog Power (1.8V) for C Channel. Must be bypassed with 0.1uF capacitor to the analog system ground plane.
ADC_TEST	162	O	Analog Front End Test O/P. Leave this Pin open. Used for factory testing purpose only.
AVDD_ADC	163	AP	Analog Power (3.3V) for ADC. Must be bypassed with 0.1uF capacitor to the analog system ground plane.
AGND	164	AG	Analog Ground. Must be directly connected to the analog system ground plane on board.
AGND	165	AG	Analog Ground. Must be directly connected to the analog system ground plane on board.
SV1P	166	AI	Positive analog sync input for channel 1. The input has to be AC coupled using a series 20 Ohm resistor and 0.1uF Capacitor network.

GNDS	167	AG	Analog Ground. Must be directly connected to the analog system ground plane on board.
A1P	168	AI	Positive analog input 'A' for channel 1. The input has to be AC coupled using a series 20 Ohm resistor and 0.1uF Capacitor network.
GNDS	169	AG	Analog Ground. Must be directly connected to the analog system ground plane on board.
B1P	170	AI	Positive analog input 'B' for channel 1. The input has to be AC coupled using a series 20 Ohm resistor and 0.1uF Capacitor network.
GNDS	171	AG	Analog Ground. Must be directly connected to the analog system ground plane on board.
C1P	172	AI	Positive analog input 'C' for channel 1. The input has to be AC coupled using a series 20 Ohm resistor and 0.1uF Capacitor network.
AVDD_A	173	AP	Analog Power (3.3V) for ADC of Channel-A. Must be bypassed with 0.1uF capacitor to the analog system ground plane.
AN	174	AI	Negative analog input 'A' for channels 1 through 4. This acts as the return Path for the Sources connected to Channel-A Inputs. This has to be AC coupled using a series 20 Ohm resistor and 0.1uF Capacitor network to Analog Ground Plane on board.
AGND	175	AG	Analog Ground. Must be directly connected to the analog system ground plane on board.
SV2P	176	AI	Positive analog sync input for channel 2. The input has to be AC coupled using a series 20 Ohm resistor and 0.1uF Capacitor network.
GNDS	177	AG	Analog Ground. Must be directly connected to the analog system ground plane on board.
A2P	178	AI	Positive analog input 'A' for channel 2. The input has to be AC coupled using a series 20 Ohm resistor and 0.1uF Capacitor network.
GNDS	179	AG	Analog Ground. Must be directly connected to the analog system ground plane on board.
B2P	180	AI	Positive analog input 'B' for channel 2. The input has to be AC coupled using a series 20 Ohm resistor and 0.1uF Capacitor network.
GNDS	181	AG	Analog Ground. Must be directly connected to the analog system ground plane on board.
C2P	182	AI	Positive analog input 'C' for channel 2. The input has to be AC coupled using a series 20 Ohm resistor and 0.1uF Capacitor network.
AVDD_B	183	AP	Analog Power (3.3V) for ADC of Channel-B. Must be bypassed with 0.1uF capacitor to the analog system ground plane.
BN	184	AI	Negative analog input 'B' for channels 1 through 4. This acts as the return Path for the Sources connected to Channel-B Inputs. This has to be AC coupled using a series 20 Ohm resistor and 0.1uF Capacitor network to Analog Ground Plane on board.
AGND	185	AG	Analog Ground. Must be directly connected to the analog system ground plane on board.
SV3P	186	AI	Positive analog sync input for channel 3. The input has to be AC coupled using a series 20 Ohm resistor and 0.1uF Capacitor network.
VDD18_AB	158	AP	Analog Power (1.8V) for A & B Channels. Must be bypassed with 0.1uF capacitor to the analog system ground plane.
GNDS	187	AG	Analog Ground. Must be directly connected to the analog system ground plane on board.
A3P	188	AI	Positive analog input 'A' for channel 3. The input has to be AC coupled using a series 20 Ohm resistor and 0.1uF Capacitor network.
GNDS	189	AG	Analog Ground. Must be directly connected to the analog system ground plane on board.
B3P	190	AI	Positive analog input 'B' for channel 3. The input has to be AC coupled using a series 20 Ohm resistor and 0.1uF Capacitor network.
GNDS	191	AG	Analog Ground. Must be directly connected to the analog system ground plane on board.
C3P	192	AI	Positive analog input 'C' for channel 3. The input has to be AC coupled using a series 20 Ohm resistor and 0.1uF Capacitor network.
AVDD_C	193	AP	Analog Power (3.3V) for ADC of Channel-C. Must be bypassed with 0.1uF capacitor to the analog system ground plane.
CN	194	AI	Negative analog input 'C' for channels 1 through 4. This acts as the return Path for the Sources connected to Channel-C Inputs. This has to be AC coupled using a series 20 Ohm resistor and 0.1uF Capacitor network to Analog Ground Plane on board.
AGND	195	AG	Analog Ground. Must be directly connected to the analog system ground plane on board.
SV4P	196	AI	Positive analog sync input for channel 4. The input has to be AC coupled using a series 20 Ohm resistor and 0.1uF Capacitor network.
GNDS	197	AG	Analog Ground. Must be directly connected to the analog system ground plane on board.
A4P	198	AI	Positive analog input 'A' for channel 4. The input has to be AC coupled using a series 20 Ohm resistor and 0.1uF Capacitor network.
GNDS	199	AG	Analog Ground. Must be directly connected to the analog system ground plane on board.
B4P	200	AI	Positive analog input 'B' for channel 4. The input has to be AC coupled using a series 20 Ohm resistor and 0.1uF Capacitor network.
GNDS	201	AG	Analog Ground. Must be directly connected to the analog system ground plane on board.
C4P	202	AI	Positive analog input 'C' for channel 4. The input has to be AC coupled using a series 20 Ohm resistor and 0.1uF Capacitor network.
AVDD_SC	203	AP	Analog Power (3.3V) for ADC of SYNC Channel. Must be bypassed with 0.1uF capacitor to the analog system ground plane.

SVN	204	AI	Negative analog sync input for channels 1 through 4. This acts as the return Path for the Sources connected to SV Channel Inputs. This has to be AC coupled using a series 20 Ohm resistor and 0.1uF Capacitor network to Analog Ground Plane on board.
VO_GND	205	AG	Analog Ground. Must be directly connected to the analog system ground plane on board.
VOUT2	206	AO	Analog VOUT signal This is the Analog Video Output from the Decoder in the Composite Video format. This can be amplified and be fed to any video display device.
VDD18_SC	207	AP	Analog Power (1.8V) for SYNC Channel. Must be bypassed with 0.1uF capacitor to the analog system ground plane.
GND18_SC	208	AG	Analog Ground (1.8V Return) for SYNC channel. Must be directly connected to the analog system ground plane on board.

Table 2: Low Bandwidth ADC Input Port

Pin Name	No	I/O	Description
VDDA33_LBADC	1	AP	Analog Power (3.3V) for Low Bandwidth ADC Block. Must be bypassed with 0.1uF capacitor.
LBADC_IN1	2	AI	Low Bandwidth Analog Input-1. The Input signal connected to this Pin, must be bypassed with a 0.1uF capacitor and could be in the range of 0V to 3.3V (peak to peak).
LBADC_IN2	3	AI	Low Bandwidth Analog Input-2. The Input signal connected to this Pin, must be bypassed with a 0.1uF capacitor and could be in the range of 0V to 3.3V (peak to peak).
LBADC_IN3	4	AI	Low Bandwidth Analog Input-3. The Input signal connected to this Pin, must be bypassed with a 0.1uF capacitor and could be in the range of 0V to 3.3V (peak to peak).
LBADC_IN4	5	AI	Low Bandwidth Analog Input-4. The Input signal connected to this Pin, must be bypassed with a 0.1uF capacitor and could be in the range of 0V to 3.3V (peak to peak).
LBADC_IN5	6	AI	Low Bandwidth Analog Input-5. The Input signal connected to this Pin, must be bypassed with a 0.1uF capacitor and could be in the range of 0V to 3.3V (peak to peak).
LBADC_IN6	7	AI	Low Bandwidth Analog Input-6. The Input signal connected to this Pin, must be bypassed with
LBADC_RTN	8	AG	This Pin provides the Return Path for LBADC inputs. Must be directly connected to the analog system ground plane on board.
VSSA33_LBADC	9	AG	Analog Ground for Low Bandwidth ADC Block. Must be directly connected to the analog system ground plane on board.

Table 3: RCLK PLL Pins

Pin Name	No	I/O	Description
GND_RPLL	11	DG	Digital GND for ADC clocking circuit. Must be directly connected to the digital system ground plane.
VDD_RPLL_18	12	DP	Digital power (1.8V) for ADC digital logic. Must be bypassed with capacitor to Ground Plane.
VBUFC_RPLL	13	O	Test Output. Leave this Pin Open. This is reserved for Factory Testing Purpose.
AGND_RPLL	14	AG	Analog ground for the Reference DDS PLL. Must be directly connected to the analog system ground plane.
XTAL	15	AO	Crystal oscillator output.
TCLK	16	AI	Reference clock (TCLK) from the 14.3MHz crystal oscillator.
AVDD_RPLL_33	17	AP	Analog Power (3.3V) for RCLK PLL. Must be bypassed with 0.1uF capacitor.

Table 4: Digital Video Input Port

Pin Name	No	I/O	Description
VID_CLK_1	153	I	Video port data clock input meant for Video Input – 1. Up to 75Mhz [Input, 5V-tolerant]
VIDIN_HS	122	I	When Video Input – 1 is in BT656 Mode, this Pin acts as Horizontal Sync Input for Video Input – 2. OR when Video Input – 1 is in 16 Bit Mode this Pin acts as Horizontal Sync Input for Video Input – 1. OR this Pin acts as Horizontal Sync Input for 24 Bit Video Input
VIDIN_VS	121	I	When Video Input – 1 is in BT656 Mode, this Pin acts as Vertical Sync Input for Video Input – 2. OR when Video Input – 1 is in 16 Bit Mode this Pin acts as Vertical Sync Input for Video Input – 1. OR this Pin acts as Vertical Sync Input for 24 Bit Video Input
VID_DATA_IN_0 VID_DATA_IN_1 VID_DATA_IN_2 VID_DATA_IN_3 VID_DATA_IN_4 VID_DATA_IN_5 VID_DATA_IN_6 VID_DATA_IN_7	135 136 137 138 139 140 141 142	IO	Input YUV data in 8-bit BT656 of Video Input – 1 [Bi-Directional, 5V-tolerant] OR Input Y Data in case of 16 Bit Video Input (CCIR601) of Video Input – 1 OR Input Red Data in case of 24 Bit Video Input

Pin Name	No	I/O	Description
VID_DATA_IN_8 VID_DATA_IN_9 VID_DATA_IN_10 VID_DATA_IN_11 VID_DATA_IN_12 VID_DATA_IN_13 VID_DATA_IN_14 VID_DATA_IN_15	145 146 147 148 149 150 151 152	IO	Input Pr / Pb Data in case of 16 Bit Video Input (CCIR601) of Video Input – 1 OR Input Green Data in case of 24 Bit Video Input
VID_DATA_IN_16 VID_DATA_IN_17 VID_DATA_IN_18 VID_DATA_IN_19 VID_DATA_IN_20 VID_DATA_IN_21 VID_DATA_IN_22 VID_DATA_IN_23	123 124 125 128 129 130 131 132	IO	Input Blue Data in case of 24 Bit Video Input OR Video Input – 2 in 8-bit with Embedded Sync / Separate Sync Sync in which case VID_DATA_IN_16 acts as the LSB of the 8-bit Video input and VID_DATA_IN_23 acts as the MSB of the 8-bit Video input.
VID_CLK2	118	I	Video port data clock input meant for Video Input – 2. Up to 75Mhz [Input, 5V-tolerant]
VID_DE/FLD	115	I	Video Active Signal Input or the Field Signal Input from external Digital Video Source.

Note: In case of Multiple Digital Video Input Sources, only one source could be in 8-Bit with embedded Sync (BT656 mode) format.

Table 5: System Interface

Pin Name	No	I/O	Description
RESETn	10	I	Hardware Reset (active low) [Schmitt trigger, 5v-tolerant] Connect to ground with 0.01uF (or larger) capacitor.
TEST	20	I	For normal mode of operation connect this Pin to Ground.
GPIO15	21	IO	This pin is available as a general-purpose input/output port. Also it is optionally programmable to give out the external chip select signal meant for external SRAM. Refer to note below.
HSYNC2	22	I	Horizontal Sync signal Input-2. Used when Analog RGB component signal carries separate HSYNC signal.
VSYNC2	23	I	Vertical Sync signal Input-2. Used when Analog RGB component signal carries separate VSYNC signal.
HOST_SCLK	24	IO	Host input clock or 186 UART Data In or JTAG clock signal. [Input, Schmitt trigger, 5V-tolerant]
HOST_SDATA	25	IO	Host input data or 186 UART Data Out or JTAG mode signal. [Bi-directional, Schmitt trigger, slew rate limited, 5V-tolerant]
DDC_SCLK	26	IO	DDC2Bi clock for VGA Port [internal 10KΩ pull-up resistor]
DDC_SDATA	27	IO	DDC2Bi data for VGA Port [internal 10KΩ pull-up resistor]
MSTR_SCLK	30	O	Clock signal from Master Serial 2 Wire Interface Controller
MSTR_SDATA	31	IO	Data signal meant for Master Serial 2 Wire interface Controller
TCK	34	IO	This Pin accepts the Input Clock signal in case of Boundary Scan Mode.
TDI	35	IO	This Pin accepts the Input Data signal in case of Boundary Scan Mode.
TMS	36	IO	This Pin accepts the Input Test Mode Select signal in case of Boundary Scan Mode.
TRST	37	IO	This Pin accepts the Boundary Scan Reset signal in case of Boundary Scan Mode.
GPIO6/IRin	38	IO	Input from Infra Red Decoder can be connected to this Pin. When not used, this pin is available as General Purpose Input/output Port.
GPIO7/IRQin	41	IO	Input Interrupt Request signal can be connected to this Pin. When not used, this pin is available as General Purpose Input/output Port.
GPIO8/IRQout	42	IO	This Pin will give out the Interrupt Signal to interrupt external Micro. When not used, this pin is available as General Purpose Input/output Port.
GPIO9/SIPC_SCLK	43	IO	This Pin accepts the Clock signal from External Serial 2 Wire interface Bus if FLI8125 is programmed to be in Slave mode. When not used, this pin is available as General Purpose Input/output Port.
GPIO10/SIPC_SDATA/ A18	44	IO	This Pin acts as the Data I/O signal when used with External Serial 2 Wire interface Bus if FLI8125 is programmed to be in Slave mode. Or this Pin is programmable to give out Address # 18 from the Internal Micro when used with 512K External Memory. When not used, this pin is available as General Purpose Input/output Port.
GPIO11/PWM0	47	IO	This Pin can be programmed to give out Pulse Width Modulated Output Pulses for external use. When not used, this pin is available as General Purpose Input/output Port.
GPIO12/PWM1	48	IO	This Pin can be programmed to give out Pulse Width Modulated Output Pulses for external use. When not used, this pin is available as General Purpose Input/output Port.
GPIO13/PWM2	51	IO	This Pin can be programmed to give out Pulse Width Modulated Output Pulses for external use. When not used, this pin is available as General Purpose Input/output Port.

Pin Name	No	I/O	Description
GPIO14/PWM3/ SCART16	52	IO	This Pin can be programmed to give out Pulse Width Modulated Output Pulses for external use. Or it can be programmed to sense the Fast Blank Input signal from a SCART I/P source. When not used, this pin is available as General Purpose Input/output Port.
TDO	55	O	This Pin provides the Output Data in case of Boundary Scan Mode.
HSYNC1	156	I	Horizontal Sync signal Input-1. Used when Analog RGB component signal carries separate HSYNC signal.
VSYNC1	157	I	Vertical Sync signal Input-1. Used when Analog RGB component signal carries separate VSYNC signal.
101		O	Clock Output meant for External OSD Controller
102		O	Horizontal Sync Output meant for External OSD Controller
XOSD_CLK	103	O	Vertical Sync Output meant for External OSD Controller
XOSD_HS	104	O	Field Signal Output meant for External OSD Controller
PD20/B4/GPIO0 PD21/B5/GPIO1 PD22/B6/GPIO2 PD23/B7/GPIO3	86 87 88 89	IO	These Pins provide the Panel Data as shown in the TTL Display Interface Table below. These are available as General Purpose Input / Output Pins when not used as Panel Data.

Table 6: LVDS Display Interface

Pin Name	No	I/O	Description
PBIAS	53	O	Panel Bias Control (backlight enable) [Tri-state output, 5V- tolerant]
PPWR	54	O	Panel Power Control [Tri-state output, 5V- tolerant]
AVDD_LV_33	56	DP	Digital Power for LVDS Block. Connect to digital 3.3V supply.
VCO_LV	57	O	Reserved. Output for Testing Purpose only at Factory.
AVSS_LV	58	G	Ground for LVDS outputs.
AVDD_OUT_LV_33	59	DP	Digital Power for LVDS outputs. Connect to digital 3.3V supply.
CH3P_LV_E	60	O	These form the Differential Data Output for Channel – 3 (Even).
CH3N_LV_E	61	O	
CLKP_LV_E	62	O	These form the Differential Clock Output Even Channel.
CLKN_LV_E	63	O	
CH2P_LV_E	64	O	These form the Differential Data Output for Channel – 2 (Even).
CH2N_LV_E	65	O	
CH1P_LV_E	66	O	These form the Differential Data Output for Channel – 1 (Even).
CH1N_LV_E	67	O	
CH0P_LV_E	68	O	These form the Differential Data Output for Channel – 0 (Even).
CH0N_LV_E	69	O	
AVSS_OUT_LV	70	G	Ground for LVDS outputs.
AVDD_OUT_LV_33	71	DP	Digital Power for LVDS outputs. Connect to digital 3.3V supply.
CH3P_LV_O	72	O	These form the Differential Data Output for Channel – 3 (Odd).
CH3N_LV_O	73	O	
CLKP_LV_O	74	O	These form the Differential Clock Output Odd Channel.
CLKN_LV_O	75	O	
CH2P_LV_O	76	O	These form the Differential Data Output for Channel – 2 (Odd).
CH2N_LV_O	77	O	
CH1P_LV_O	78	O	These form the Differential Data Output for Channel – 1 (Odd).
CH1N_LV_O	79	O	
CH0P_LV_O	80	O	These form the Differential Data Output for Channel – 0 (Odd).
CH0N_LV_O	81	O	
AVSS_OUT_LV	82	G	Ground for LVDS outputs.
AVDD_OUT_LV_33	83	DP	Digital Power for LVDS outputs. Connect to digital 3.3V supply.

Table 7: TTL Display Interface

Pin Name	No	I/O	Description For 8-bit panels	For 6-bit panels
PBIAS	53	O	Panel Bias Control (backlight enable) [Tri-state output, 5V- tolerant]	
PPWR	54	O	Panel Power Control [Tri-state output, 5V- tolerant]	
AVDD_LV_33	56	DP	Digital Power for TTL Block. Connect to digital 3.3V supply.	
VCO_LV	57	O	Reserved. Output for Testing Purpose only at Factory.	
AVSS_LV	58	G	Ground for TTL outputs.	
AVDD_OUT_LV_33	59	DP	Digital Power for TTL outputs. Connect to digital 3.3V supply.	
R0	60	O	Red channel bit 0 (Even)	Not used.
R1	61	O	Red channel bit 1 (Even)	Not used.
R2	62	O	Red channel bit 2 (Even)	Red channel bit 0 (Even)
R3	63	O	Red channel bit 3 (Even)	Red channel bit 1 (Even)
R4	64	O	Red channel bit 4 (Even)	Red channel bit 2 (Even)
R5	65	O	Red channel bit 5 (Even)	Red channel bit 3 (Even)
R6	66	O	Red channel bit 6 (Even)	Red channel bit 4 (Even)
R7	67	O	Red channel bit 7 (Even)	Red channel bit 5 (Even)
G0	68	O	Green channel bit 0 (Even)	Not used.
G1	69	O	Green channel bit 1 (Even)	Not used.
AVSS_OUT_LV	70	G	Ground for TTL outputs.	
AVDD_OUT_LV_33	71	DP	Digital Power for TTL outputs. Connect to digital 3.3V supply.	
G2	72	O	Green channel bit 2 (Even)	Green channel bit 0 (Even)
G3	73	O	Green channel bit 3 (Even)	Green channel bit 1 (Even)
G4	74	O	Green channel bit 4 (Even)	Green channel bit 2 (Even)
G5	75	O	Green channel bit 5 (Even)	Green channel bit 3 (Even)
G6	76	O	Green channel bit 6 (Even)	Green channel bit 4 (Even)
G7	77	O	Green channel bit 7 (Even)	Green channel bit 5 (Even)
B0	78	O	Blue channel bit 0 (Even)	Not used.
B1	79	O	Blue channel bit 1 (Even)	Not used.
B2	80	O	Blue channel bit 2 (Even)	Blue channel bit 0 (Even)
B3	81	O	Blue channel bit 3 (Even)	Blue channel bit 1 (Even)
AVSS_OUT_LV	82	G	Ground for TTL outputs.	
AVDD_OUT_LV_33	83	DP	Digital Power for TTL outputs. Connect to digital 3.3V supply.	
PD20/B4	86	O	Blue channel bit 4 (Even)	Blue channel bit 2 (Even)
PD21/B5	87	O	Blue channel bit 5 (Even)	Blue channel bit 3 (Even)
PD22/B6	88	O	Blue channel bit 6 (Even)	Blue channel bit 4 (Even)
PD23/B7	89	O	Blue channel bit 7 (Even)	Blue channel bit 5 (Even)
DEN	90	O	Display Data Enable	
DHS	91	O	Display Horizontal Sync.	
DVS	92	O	Display Vertical Sync.	
DCLK	93	O	Display Pixel Clock	
PD24	115	O	Red channel bit 0 (Odd)	Not used.
Pin Name	**No**	**I/O**	**Description** **For 8-bit panels**	**For 6-bit panels**
PD25	114	O	Red channel bit 1 (Odd)	Not used.
PD26	113	O	Red channel bit 2 (Odd)	Red channel bit 0 (Odd)
PD27	112	O	Red channel bit 3 (Odd)	Red channel bit 1 (Odd)
PD28	111	O	Red channel bit 4 (Odd)	Red channel bit 2 (Odd)
PD29	110	O	Red channel bit 5 (Odd)	Red channel bit 3 (Odd)
PD30	109	O	Red channel bit 6 (Odd)	Red channel bit 4 (Odd)
PD31	108	O	Red channel bit 7 (Odd)	Red channel bit 5 (Odd)
PD32	107	O	Green channel bit 0 (Odd)	Not used.
PD33	106	O	Green channel bit 1 (Odd)	Not used.
PD34	105	O	Green channel bit 2 (Odd)	Green channel bit 0 (Odd)
PD35	104	O	Green channel bit 3 (Odd)	Green channel bit 1 (Odd)
PD36	103	O	Green channel bit 4 (Odd)	Green channel bit 2 (Odd)
PD37	102	O	Green channel bit 5 (Odd)	Green channel bit 3 (Odd)
PD38	101	O	Green channel bit 6 (Odd)	Green channel bit 4 (Odd)
PD39	123	O	Green channel bit 7 (Odd)	Green channel bit 5 (Odd)
PD40	124	O	Blue channel bit 0 (Odd)	Not used.
PD41	125	O	Blue channel bit 1 (Odd)	Not used.
PD42	128	O	Blue channel bit 2 (Odd)	Blue channel bit 0 (Odd)
PD43	129	O	Blue channel bit 3 (Odd)	Blue channel bit 1 (Odd)
PD44	130	O	Blue channel bit 4 (Odd)	Blue channel bit 2 (Odd)
PD45	131	O	Blue channel bit 5 (Odd)	Blue channel bit 3 (Odd)
PD46	132	O	Blue channel bit 6 (Odd)	Blue channel bit 4 (Odd)
PD47	118	O	Blue channel bit 7 (Odd)	Blue channel bit 5 (Odd)

Note: In case of 24 Bit TTL Panels the RGB Odd Channel Outputs will not be used. In that case they can be made available for other purposes as Address & Data from On-Chip Micro or Digital Video Input Data.

Table 8: Parallel/Serial ROM Interface

Pin Name	No	I/O	Description
A17 A16 A15 A14 A13 A12 A11 A10 A9 A8 A7 A6 A5 A4 A3 A2 A1 A0	95 96 100 101 102 103 104 105 106 107 108 109 110 111 112 113 114 115	O	256K x8 PROM Address. These pins also have bootstrap functionality. For serial SPI ROM interface: - ROM_ADDR17 will be Serial Clock (ROM_SCLK) - ROM_ADDR16 will be Serial Data Output (ROM_SDO) For 512K X 8 PROM, Address Signal A18 is available thru Pin # 44 which is GPIO10.
D7 D6 D5 D4 D3 D2 D1 D0	132 131 130 129 128 125 124 123	IO	External PROM data input.
ROM_OEN	118	O	External PROM data Output Enable.
ROM_SDI/ ROM_WEN	97	O	External PROM data Write Enable (for In-System-Programming of FLASH) or Serial Data Input (SDI) for SPI ROM interface.
ROM_SCSN/ ROM_CSN	94	O	External PROM data Chip Select or Serial PROM Chip Select (ROM_SCSN) for SPI ROM interface.

Table 9: Digital Power and Ground

Pin Name	No	I/O	Description
RVDD_3.3	32 49 98 116 154	P	Ring VDD. Connect to digital 3.3V.
CVDD_1.8	18 28 39 45 84 119 126 133 143	P	Core VDD. Connect to digital 1.8V.
CRVSS	19 29 33 40 46 50 85 99 117 120 127 134 144 155	G	Chip ground for core and ring.

Table 10: JTAG Boundary Scan

Pin Name	No	I/O	Description
TCK	34	I	JTAG Boundary Scan TCK signal
TDO	55	O	JTAG Boundary Scan TDO signal
TDI	35	I	JTAG Boundary Scan TDI signal. Pad has internal 50K pull-up resistor.
TMS	36	I	JTAG Boundary Scan RST signal. Pad has internal 50K pull-up resistor.
TRST	37	I	JTAG Boundary Scan TMS signal. Pad has internal 50K pull-up resistor.

3. FDS9435A Single P-Channel Enhancement Mode Field Effect Transistor

SO-8 P-Channel enhancement mode power field effect transistors are produced using Fairchild's proprietary, high cell density, DMOS technology. This very high density process is especially tailored to minimize on-state resistance and provide superior switching performance. These devices are particularly suited for low voltage applications such as notebook computer power management and other battery powered circuits where fast switching, low in-line power loss, and resistance to transients are needed.

• **Features**

-5.3 A, -30 V, $R_{DS(ON)}$ = 0.045 Ω @ V_{GS} = -10 V,

$R_{DS(ON)}$ = 0.075 Ω @ V_{GS} = - 4.5 V.

High density cell design for extremely low RDS(ON).

High power and current handling capability in a widely used surface mount package.

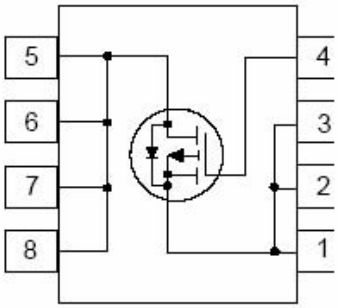

Absolute Maximum Ratings T_A = 25°C unless otherwise noted

Symbol	Parameter	FDS9435A	Units
V_{DSS}	Drain-Source Voltage	-30	V
V_{GSS}	Gate-Source Voltage	-20	V
I_D	Drain Current - Continuous (Note 1a)	- 5.3	A
	- Pulsed	-50	
P_D	Maximum Power Dissipation (Note 1a)	2.5	W
	(Note 1b)	1.2	
	(Note 1c)	1	
T_J,T_{STG}	Operating and Storage Temperature Range	-55 to 150	°C
THERMAL CHARACTERISTICS			
$R_{\theta JA}$	Thermal Resistance, Junction-to-Ambient (Note 1a)	50	°C/W
$R_{\theta JC}$	Thermal Resistance, Junction-to-Case (Note 1)	25	°C/W

4. AT24C32A 2-Wire Serial EEPROM 32K (4096 x 8)

Features

- **Low-Voltage and Standard-Voltage Operation**
  - **2.7 (V_{CC} = 2.7V to 5.5V)**
  - **1.8 (V_{CC} = 1.8V to 5.5V)**
- **Low-Power Devices (I_{SB} = 2 µA @ 5.5V) Available**
- **Internally Organized 4096 x 8, 8192 x 8**
- **2-Wire Serial Interface**
- **Schmitt Trigger, Filtered Inputs for Noise Suppression**
- **Bidirectional Data Transfer Protocol**
- **100 kHz (1.8V) and 400 kHz (2.5V) Clock Rate for AT24C32A**
- **400 kHz (1.8V) Clock Rate for AT24C64A**
- **Write Protect Pin for Hardware Data Protection**
- **32-Byte Page Write Mode (Partial Page Writes Allowed)**
- **Self-Timed Write Cycle (10 ms max)**
- **High Reliability**
  - **Endurance: 1 Million Write Cycles**
  - **Data Retention: 100 Years**
- **Automotive Grade and Extended Temperature Devices Available**
- **8-Pin JEDEC PDIP and 8-Pin JEDEC SOIC Packages**

Description

The AT24C32A/64A provides 32,768/65,536 bits of serial electrically erasable and programmable read only memory (EEPROM) organized as 4096/8192 words of 8 bits each. The device's cascadable feature allows up to 8 devices to share a common 2-wire bus. The device is optimized for use in many industrial and commercial applications where low power and low voltage operation are essential. The AT24C32A/64A is available in space saving 8-pin JEDEC PDIP and 8-pin JEDEC SOIC packages and is accessed via a 2-wire serial interface. In addition, the entire family is available in 2.7V (2.7V to 5.5V) and 1.8V (1.8V to 5.5V) versions.

Pin Configurations

Pin Name	Function
A0 - A2	Address Inputs
SDA	Serial Data
SCL	Serial Clock Input
WP	Write Protect

8-Pin SOIC

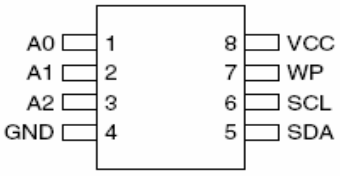

Pin Description

SERIAL CLOCK (SCL): The SCL input is used to positive edge clock data into each EEPROM device and negative edge clock data out of each device.

SERIAL DATA (SDA): The SDA pin is bidirectional for serial data transfer. This pin is open-drain driven and may be wire-ORed with any number of other open-drain or open collector devices.

DEVICE/PAGE ADDRESSES (A2, A1, A0): The A2, A1 and A0 pins are device address inputs that are hard wired or left not connected for hardware compatibility with AT24C16. When the pins are hardwired, as many as eight 32K/64K devices may be addressed on a single bus system (device addressing is discussed in detail under the Device Addressing section). When the pins are not hardwired, the default A_2, A_1, and A_0 are zero.

WRITE PROTECT (WP): The write protect input, when tied to GND, allows normal write operations. When WP is tied high to V_{CC}, all write operations to the memory are inhibited. If left unconnected, WP is internally pulled down to GND. Switching WP to V_{CC} prior to a write operation creates a software write protect function.

5. LM1117 (SOT-223)

FEATURES

- Output Current up to 1 A
- Low Dropout Voltage (700mV at 1A Output Current)
- Three Terminal Adjustable or Fixed 1.5V, 1.8V, 2.5V, 2.85V, 3.0V, 3.3V, 5.0V
- 2.85V Device for SCSI-II Active Terminator
- 0.04% Line Regulaion, 0.1% Load Regulation
- Very Low Quiescent Current
- Internal Current andTerminal Limit
- Logic-Controlled Electronics Shutdown
- Surface Mount Package SOT-223 & TO-263 (D2-Pack)
- 100% Thermal Limit Burn-In

APPLICATION

- Active SCSI Terminators
- Portable/Plan Top/Notebook Computers
- High Efficiency Linear Regulators
- SMPS Post Regulators
- Mother B/D Clock Supplies
- Disk Drives
- Battery Chargers

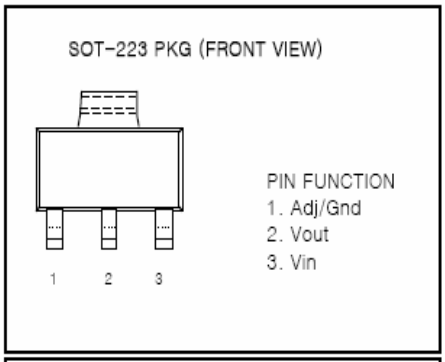

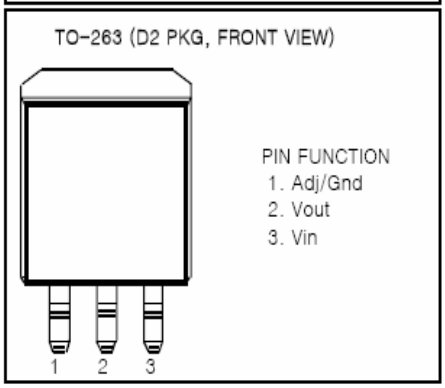

ORDERING INFORMATION

Device (Marking)	Package
LM1117S	SOT-223
LM1117S-XX	
LM1117T	TO-263 (D2)
LM1117T-XX	

(X=Output Voltage=1.5V, 1.8V, 2.5V, 2.85V, 3.0V, 3.3V, 5.0V, Adjustable=AD)

DESCRIPTION

The LM1117 is a low power positive-voltage regulator designed to meet 1A output current and comply with SCSI-II specifications with a fixed output voltage of 2.85V. This device is an excellent choice for use in battery-powered applications, as active terminators for the SCSI bus, and portable computers.
The LM1117 features very low quiescent current and very low dropout voltage of 700mV at a full load and lower as output current decreases. LM1117 is available as an adjustable or fixed 1.5V, 1.8V, 2.5V, 2.85V, 3.0V, 3.3V, and 5.0V output voltages.
The LM1117 is offered in a 3-pin surface mount package SOT-223 & TO-263. The output capacitor of 10μF or larger is needed for output stability of LM1117 as required by most of the other regulator circuits.

6. 74LVX125

Low Voltage Quad Buffer with 3-STATE Outputs.

General Description

The LVX125 contains four independent non-inverting buffers with 3-STATE outputs. The inputs tolerate voltages up to 7V allowing the interface of 5V systems to 3V systems.

Features

- Input voltage level translation from 5V to 3V
- Ideal for low power/low noise 3.3V applications
- Guaranteed simultaneous switching noise level and dynamic threshold performance

Ordering Code:

Order Number	Package Number	Package Description
74LVX125M	M14A	14-Lead Small Outline Integrated Circuit (SOIC), JEDEC MS-120, 0.150" Narrow
74LVX125SJ	M14D	14-Lead Small Outline Package (SOP), EIAJ TYPE II, 5.3mm Wide
74LVX125MTC	MTC14	14-Lead Thin Shrink Small Outline Package (TSSOP), JEDEC MO-153, 4.4mm Wide

Devices also available in Tape and Reel. Specify by appending suffix letter "X" to the ordering code.

Logic Symbol

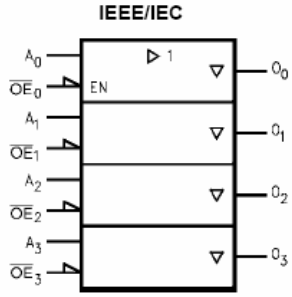

Connection Diagram

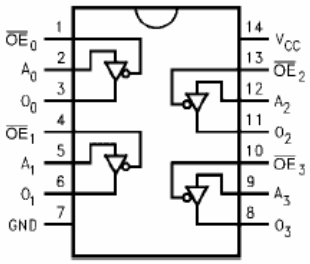

Pin Descriptions

Pin Names	Description
A_n	Inputs
$\overline{OE}_n$	Output Enable Inputs
O_n	Outputs

Truth Table

Inputs		Output
$\overline{OE}_n$	A_n	O_n
L	L	L
L	H	H
H	X	Z

H = HIGH Voltage Level
L = LOW Voltage Level
Z = High Impedance
X = Immaterial

Capacitance

Symbol	Parameter	$T_A = 25°C$			$T_A = -40°C$ to $+85°C$		Units
		Min	Typ	Max	Min	Max	
C_{IN}	Input Capacitance		4.0	10		10	pF
C_{PD}	Power Dissipation Capacitance (Note 5)		14				pF

Note 5: C_{PD} is defined as the value of the internal equivalent capacitance which is calculated from the operating current consumption without load.

Average operating current can be obtained by the equation: $I_{CC(opr.)} = \frac{C_{PD} \times V_{CC} \times f_{IN} + I_{CC}}{4 \text{ (per bit)}}$

7. AT49BV040B

Features

- **Single Supply for Read and Write: 2.7V to 5.5V**
- **Fast Read Access Time – 70 ns (V_{CC} = 2.7V to 3.6V); 55 ns (V_{CC} = 4.5V to 5.5V)**
- **Internal Program Control and Timer**
- **Flexible Sector Architecture**
  - **One 16K Bytes Boot Sector with Programming Lockout**
  - **Two 8K Bytes Parameter Sectors**
  - **Eight Main Memory Sectors (One 32K Bytes, Seven 64K Bytes)**
- **Fast Erase Cycle Time – 8 Seconds**
- **Byte-by-Byte Programming – 10 µs/Byte Typical**
- **Hardware Data Protection**
- **$\overline{\text{DATA}}$ Polling or Toggle Bit for End of Program Detection**
- **Low Power Dissipation**
  - **20 mA Active Current**
  - **25 µA CMOS Standby Current for V_{CC} = 2.7V to 3.6V**
  - **30 µA CMOS Standby Current for V_{CC} = 4.5V to 5.5V**
- **Minimum 100,000 Write Cycles**

Description

The AT49BV040B is a 2.7V to 5.5V in-system reprogrammable Flash Memory. Its 4 megabits of memory is organized as 524,288 words by 8 bits. Manufactured with Atmel's advanced nonvolatile CMOS technology, the device offers an access time of 70 ns (V_{CC} = 2.7V to 3.6V) and an access time of 55 ns (V_{CC} = 4.5V to 5.5V). The power dissipation over the industrial temperature range with V_{CC} = 2.7V to 3.6V is 72 mW and is 110 mW with V_{CC} = 4.5V to 5.5V.

When the device is deselected, the CMOS standby current is less than 30 µA. To allow for simple in-system reprogrammability, the AT49BV040B does not require high input voltages for programming. Reading data out of the device is similar to reading from an EPROM; it has standard $\overline{\text{CE}}$, $\overline{\text{OE}}$, and $\overline{\text{WE}}$ inputs to avoid bus contention. Reprogramming the AT49BV040B is performed by erasing a sector of data and then programming on a byte by byte basis. The byte programming time is a fast 10 µs. The end of a program or erase cycle can be optionally detected by the $\overline{\text{DATA}}$ polling or toggle bit feature. Once the end of a byte program cycle has been detected, a new access for a read or program can begin. The typical number of program and erase cycles is in excess of 100,000 cycles.

The device is erased by executing a chip erase or a sector erase command sequence; the device internally controls the erase operations. The memory array of the AT49BV040B is organized into two 8K byte parameter sectors, eight main memory sectors, and one boot sector.

The device has the capability to protect the data in the boot sector; this feature is enabled by a command sequence. The 16K-byte boot sector includes a reprogramming lock out feature to provide data integrity. The boot sector is designed to contain user secure code, and when the feature is enabled, the boot sector is permanently protected from being reprogrammed.

Pin Configurations

Pin Name	Function
A0 - A18	Addresses
$\overline{CE}$	Chip Enable
$\overline{OE}$	Output Enable
$\overline{WE}$	Write Enable
I/O0 - I/O7	Data Inputs/Outputs

32-lead PLCC Top View

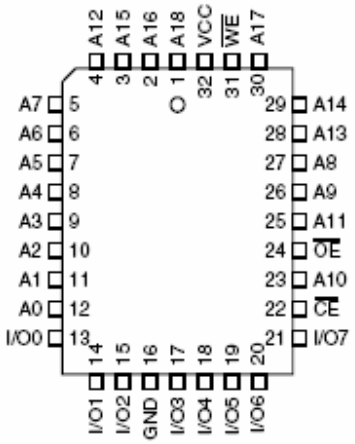

32-lead VSOP or 32-lead TSOP Top View – Type 1

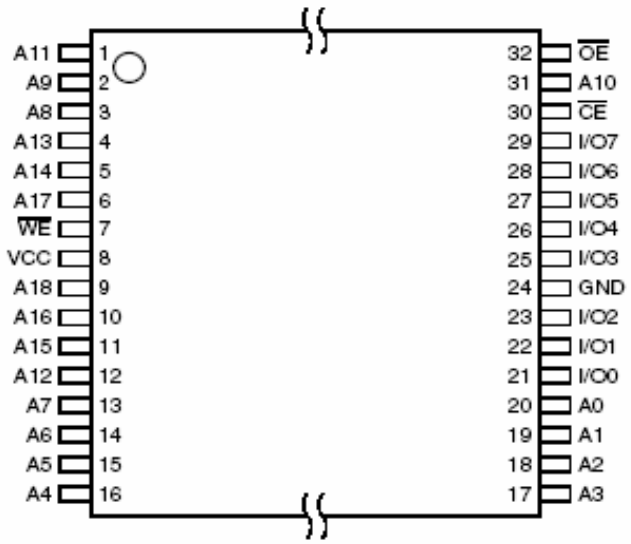

Block Diagram

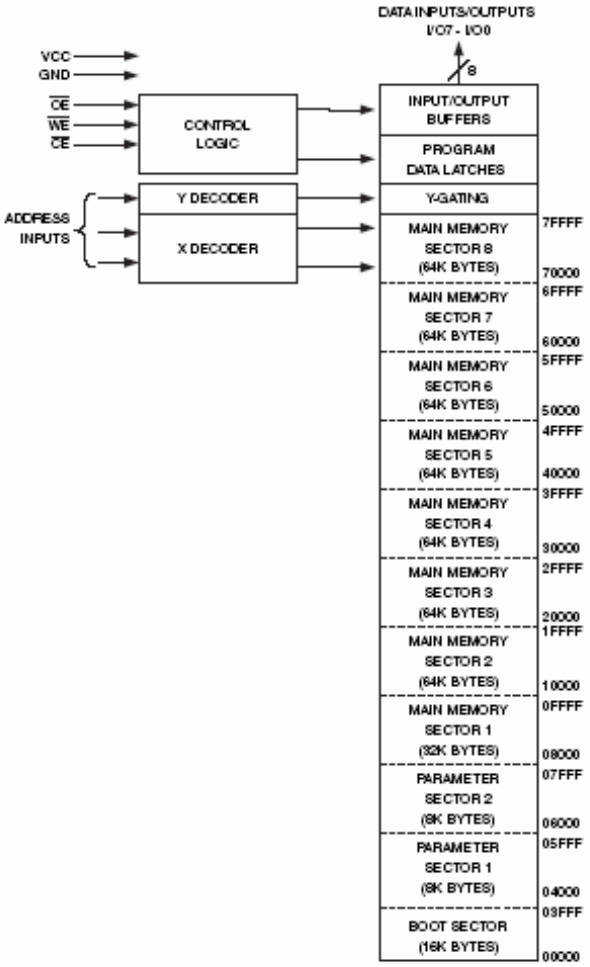

8. CD4052B

The CD4052B is a differential 4-Channel multiplexer having two binary control inputs, A and B, and an inhibit input. The two binary signals select 1 of 4 pairs of channels to be turned on and connect the analog inputs to the outputs.

Features

- Wide Range of Digital and Analog Signal Levels
  - Digital . . . . . 3V to 20V
  - Analog. . . . . $\leq 20V_{P-P}$
- Low ON Resistance, 125Ω (Typ) Over $15V_{P-P}$ Signal Input Range for V_{DD}-V_{EE} = 18V
- High OFF Resistance, Channel Leakage of ±100pA (Typ) at V_{DD}-V_{EE} = 18V
- Logic-Level Conversion for Digital Addressing Signals of 3V to 20V (V_{DD}-V_{SS} = 3V to 20V) to Switch Analog Signals to $20V_{P-P}$ (V_{DD}-V_{EE} = 20V)
- Matched Switch Characteristics, r_{ON} = 5Ω (Typ) for V_{DD}-V_{EE} = 15V
- Very Low Quiescent Power Dissipation Under All Digital-Control Input and Supply Conditions, 0.2μW (Typ) at V_{DD}-V_{SS} = V_{DD}-V_{EE} = 10V
- Binary Address Decoding on Chip
- 5V, 10V and 15V Parametric Ratings
- 10% Tested for Quiescent Current at 20V
- Maximum Input Current of 1μA at 18V Over Full Package Temperature Range, 100nA at 18V and 25°C
- Break-Before-Make Switching Eliminates Channel Overlap

Applications

- Analog and Digital Multiplexing and Demultiplexing
- A/D and D/A Conversion
- Signal Gating

PInputs

CD4052B (PDIP, CDIP, TSSOP)
TOP VIEW

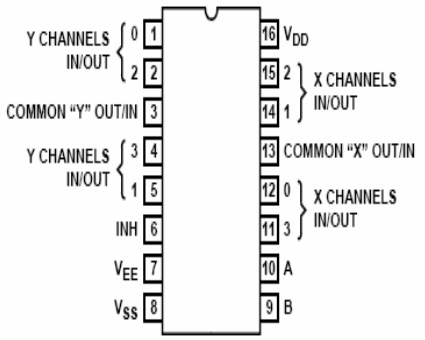

ICS ON DVD BOARD

1. BA033T Low saturation voltage type 3-pin regulator

The BAOOT and BAOOFP series are fixed positive output low drop-out type, 3-pin voltage regulators with positive output. These regulators are used to provide a stabilized output voltage from a fluctuating DC input voltage.
There are 10 fixed output voltages, as follows:3V, 3.3V, 5V, 6V*, 7V, 8V, 9V, 10V, 12V and 15V. The maximum current capacity is 1A for each of the above voltages. (Items marked with an asterisk are under development.)

●Application

Constant voltage power supply

●Features

1) Built-in overvoltage protection circuit, overcurrent protection circuit and thermal shutdown circuit.
2) TO220FP and TO252-3 packages are available to cover a wide range of applications.
3) Compatible with the BA178OO series.
4) Richly diverse lineup.
5) Low minimum I / O voltage differential.

●Product codes

Output voltage (V)	Product No.	Output voltage (V)	Product No.
3.0	BA03T / FP	8.0	BA08T / FP
3.3	BA033T / FP	9.0	BA09T / FP
5.0	BA05T / FP	10.0	BA10T / FP
6.0	BA06T * / FP *	12.0	BA12T / FP
7.0	BA07T / FP	15.0	BA15T / FP

* : Under development.

●Block diagram

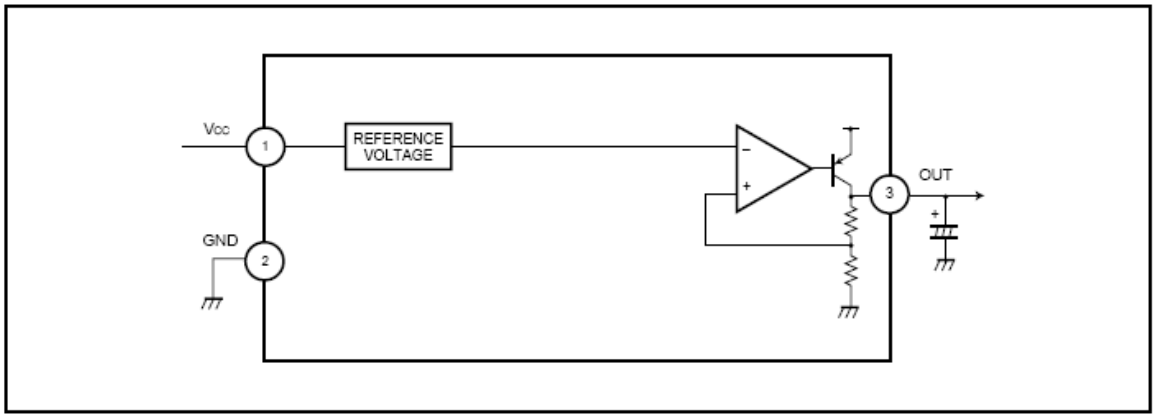

2. LM1117 (See Page 22)

3. MT1389HD

Abbr. :

SR : Slew Rate
PU : Pull Up
PD : Pull Down

SMT : Schmitt Trigger
2MA~16MA : Output buffer driving strength.

Pin	Main	Alt.	Type	Description
RF Interface (26)				
231	RFGND18		Ground	Analog ground
232	RFVDD18		Power	Analog power 1.8V
252	OSP		Analog output	RF Offset cancellation capacitor connecting
253	OSN		Analog output	RF Offset cancellation capacitor connecting
254	RFGC		Analog output	RF AGC loop capacitor connecting for DVD-ROM
255	IREF		Analog Input	Current reference input. It generates reference current for RF path. Connect an external 15K resistor to this pin and AVSS.
256	AVDD3		Power	Analog power 3.3V
1	AGND		Ground	Analog ground
2	DVDA		Analog Input	AC coupled input path A
3	DVDB		Analog Input	AC coupled input path B
4	DVDC		Analog Input	AC coupled input path C
5	DVDD		Analog Input	AC coupled input path D
6	DVDRFIP		Analog Input	AC coupled DVD RF signal input RFIP
7	DVDRFIN		Analog Input	AC coupled DVD RF signal input RFIN
8	MA		Analog Input	DC coupled main-beam RF signal input A
9	MB		Analog Input	DC coupled main-beam RF signal input B
10	MC		Analog Input	DC coupled main-beam RF signal input C
11	MD		Analog Input	DC coupled main-beam RF signal input D
12	SA		Analog Input	DC coupled sub-beam RF signal input A
13	SB		Analog Input	DC coupled sub-beam RF signal input B
14	SC		Analog Input	DC coupled sub-beam RF signal input C
15	SD		Analog Input	DC coupled sub-beam RF signal input D
16	CDFON		Analog Input	CD focusing error negative input
17	CDFOP		Analog Input	CD focusing error positive input
18	TNI		Analog Input	3 beam satellite PD signal negative input
19	TPI		Analog Input	3 beam satellite PD signal positive input

ALPC (4)				
Pin	**Main**	**Alt.**	**Type**	**Description**
20	MDI1		Analog Input	Laser power monitor input
21	MDI2		Analog Input	Laser power monitor input
22	LDO2		Analog Output	Laser driver output
23	LDO1		Analog Output	Laser driver output
ADC Power (2)				
244	ADCVDD3		Power	Analog 3.3V Power for ADC
245	ADCVSS		Ground	Analog ground for ADC
VPLL (3)				
43	VPLLVSS		Ground	Analog ground for VPLL
44	CAPPAD		Analog Input	VPLL External Capacitance connection
45	VPLLVDD3		Power	Analog 3.3V Power for VPLL

Reference Voltage (3)					
28	V2REFO		Analog output	Reference voltage 2.8V	
29	V20		Analog output	Reference voltage 2.0V	
30	VREFO		Analog output	Reference voltage 1.4V	
Analog Monitor Output (7)					
24	SVDD3		Power	Analog power 3.3V	
25	CSO	RFOP	Analog output	1) 2)	Central servo Positive main beam summing output
26	RFLVL	RFON	Analog output	1) 2)	RFRP low pass, or Negative main beam summing output
27	SGND		Ground	Analog ground	
31	FEO		Analog output	Focus error monitor output	
32	TEO		Analog output	Tracking error monitor output	
33	TEZISLV		Analog output	TE Slicing Level	
Analog Servo Interface (6)					
246	RFVDD3		Power	Analog Power	
247	RFRPDC		Analog output	RF ripple detect output	
248	RFRPAC		Analog Input	RF ripple detect input(through AC-coupling)	
249	HRFZC		Analog Input	High frequency RF ripple zero crossing	
250	CRTPLP		Analog output	Defect level filter capacitor connecting	
251	RFGND		Ground	Analog Power	

RF Data PLL Interface (9)				
Pin	**Main**	**Alt.**	**Type**	**Description**
235	JITFO		Analog output	The output terminal of RF jitter meter.
236	JITFN		Analog Input	The input terminal of RF jitter meter.
237	PLLVSS		Ground	Ground pin for data PLL and related analog circuitry.
238	IDACEXLP		Analog output	Data PLL DAC Low-pass filter
239	PLLVDD3		Power	Power pin for data PLL and related analog circuitry.
240	LPFON		Analog Output	The negative output of loop filter amplifier
241	LPFIP		Analog Input	The positive input terminal of loop filter amplifier.
242	LPFIN		Analog Input	The negative input terminal of loop filter amplifier.
243	LPFOP		Analog Output	The positive output of loop filter amplifier
Motor and Actuator Driver Interface (10)				
34	OP_OUT		Analog output	Op amp output.
35	OP_INN		Analog input	Op amp negative input
36	OP_INP		Analog input	Op amp positive input
37	DMO		Analog Output	Disk motor control output. PWM output.
38	FMO		Analog Output	Feed motor control. PWM output.
39	TROPENPW M		Analog Output	Tray PWM output / Tray open output.
40	PWMOUT 1	V_ADIN9	Analog Output	1) 1st General PWM output, or 2) Version AD input 9
41	TRO		Analog Output	Tracking servo output. PDM output of tracking servo compensator.
42	FOO		Analog Output	Focus servo output. PDM output of focus servo compensator
50	FG (Diogital pin)	V_ADIN8	LVTTL 3.3V Input, Schmitt Input, pull up , with analog input path for V_ADIN8	1) Motor Hall sensor input, or 2) Version AD input 8
General Power/Ground (18)				
55,93, 142,160, 174, 213	DVDD18		Power	1.8V power pin for internal digital circuitry
81,178	DVSS		Ground	1.8V Ground pin for internal digital circuitry
65,96,118, 131,145, 156, 170, 208	DVDD3		Power	3.3V power pin for internal digital circuitry
90, 148	DVSS		Ground	3.3V Ground pin for internal digital circuitry

Micro Controller and Flash Interface (48)				
Pin	**Main**	**Alt.**	**Type**	**Description**
62	HIGHA0		Input 2~16MA, SR PU	Microcontroller address 8

74	HIGHA1		Input 2~16MA, SR PU	Microcontroller address 9
73	HIGHA2		Input 2~16MA, SR PU	Microcontroller address 10
72	HIGHA3		Input 2~16MA, SR PU	Microcontroller address 11
71	HIGHA4		Input 2~16MA, SR PU	Microcontroller address 12
70	HIGHA5		Input 2~16MA, SR PU	Microcontroller address 13
69	HIGHA6		Input 2~16MA, SR PU	Microcontroller address 14
68	HIGHA7		Input 2~16MA, SR PU	Microcontroller address 15
89	AD7		Input 2~16MA, SR	Microcontroller address/data 7
86	AD6		Input 2~16MA, SR	Microcontroller address/data 6
85	AD5		Input 2~16MA, SR	Microcontroller address/data 5
84	AD4		Input 2~16MA, SR	Microcontroller address/data 4
83	AD3		Input 2~16MA, SR	Microcontroller address/data 3
82	AD2		Input 2~16MA, SR	Microcontroller address/data 2
80	AD1		Input 2~16MA, SR	Microcontroller address/data 1
79	AD0		Input 2~16MA, SR	Microcontroller address/data 0
92	IOA0		Input 2~16MA, SR PU	Microcontroller address 0 / IO

Pin	Main	Alt.	Type	Description
77	IOA1		Input 2~16MA, SR PU	Microcontroller address 1 / IO

56	IOA2		Input 2~16MA, SR PU	Microcontroller address 2 / IO
57	IOA3		Input 2~16MA, SR PU	Microcontroller address 3 / IO
58	IOA4		Input 2~16MA, SR PU	Microcontroller address 4 / IO
59	IOA5		Input 2~16MA, SR PU	Microcontroller address 5 / IO
60	IOA6		Input 2~16MA, SR PU	Microcontroller address 6 / IO
61	IOA7		Input 2~16MA, SR PU	Microcontroller address 7 / IO
67	A16		Output 2~16MA, SR	Flash address 16
91	A17		Output 2~16MA, SR	Flash address 17
63	IOA18		Input 2~16MA, SR SMT	Flash address 18 / IO
64	IOA19		Input 2~16MA, SR SMT	Flash address 19 / IO
75	IOA20		Input 2~16MA, SR SMT	Flash address 20 / IO
87	IOA21		Input 2~16MA, SR SMT	1) Flash address 21 / IO 2) While External FLASH size <= 2MB: I) GPIO
88	ALE		Input 2~16MA, SR PU, SMT	Microcontroller address latch enable

Pin	Main	Alt.	Type	Description
78	IOOE#		Input 2~16MA, SR SMT	Flash output enable, active low / IO

66	IOWR#		Input 2~16MA, SR SMT	Flash write enable, active low / IO
76	IOCS#		Input 2~16MA, SR PU, SMT	Flash chip select, active low / IO
94	UWR#		Input 2~16MA, SR PU, SMT	Microcontroller write strobe, active low
95	URD#		Input 2~16MA, SR PU, SMT	Microcontroller read strobe, active low
97	UP1_2		Input 4MA, SR PU, SMT	Microcontroller port 1-2
98	UP1_3		Input 4MA, SR PU, SMT	Microcontroller port 1-3
99	UP1_4		Input 4MA, SR PU, SMT	Microcontroller port 1-4
100	UP1_5		Input 4MA, SR PU, SMT	Microcontroller port 1-5
101	UP1_6	SCL	Input 4MA, SR PU, SMT	1) Microcontroller port 1-6 2) I^2C clock pin
102	UP1_7	SDA	Input 4MA, SR PU, SMT	1) Microcontroller port 1-7 2) I^2C data pin
103	UP3_0	RXD	Input 4MA, SR PU, SMT	1) Microcontroller port 3-0 2) 8032 RS232 RXD
104	UP3_1	TXD	Input 4MA, SR PU, SMT	1) Microcontroller port 3-1 2) 8032 RS232 TXD
105	UP3_4	RXD SCL	Input 4MA, SR PU, SMT	1) Microcontroller port 3-4 2) Hardwired RD232 RXD 3) I^2C clock pin
106	UP3_5	TXD SDA	Input 4MA, SR PU, SMT	1) Microcontroller port 3-5 2) Hardwired RD232 TXD 3) I^2C data pin
109	IR		Input SMT	IR control signal input
110	INTO#		Input 4MA, SR PU, SMT	Microcontroller external interrupt 0, active low

Audio interface (28)				
Pin	**Main**	**Alt.**	**Type**	**Description**
204	SPMCLK	SCLK0	Input Non-pull	1) Audio DAC master clock of SPDIF input 2) While SPDIF input is not used: I) Serial interface port 0 clock pin II) GPIO
205	SPDATA	SDIN0	Input Non-pull	1) Audio data of SPDIF input 2) While SPDIF input is not used: I) Serial interface port 0 data-in II) GPIO
206	SPLRCK	SDO0	Input Non-pull	1) Audio left/right channel clock of SPDIF input 2) While SPDIF input is not used: I) Serial interface port 0 data-out II) GPIO
207	SPBCK	SDCS0 ASDATA5	Input Non-pull	1) Audio bit clock of SPDIF input 2) While SPDIF input is not used: I) Serial interface port 0 chip select II) Audio serial data 5 part I : DSD data sub-woofer channel or Microphone output III) GPIO
209	ALRCK		Input 4MA, PD, SMT	1) Audio left/right channel clock Trap value in power-on 2) reset: I) 1 : use external 373 II) 0: use internal 373
210	ABCK	Fs64	Output 4MA Non-pull	1) Audio bit clock 2) Phase de-modulation
211	ACLK		Input 4MA Non-pull	Audio DAC master clock
197	ASDATA0		Input 4MA PD SMT	1) Audio serial data 0 (Front-Left/Front-Right) 2) DSD data left channel 3) Trap value in power-on reset : I) 1 : manufactory test mode II) 0 : normal operation 4) While using external channels: I) GPO_2
202	ASDATA1		Input 4MA PD SMT	1) Audio serial data 1 (Left-Surround/Right-Surround) 2) DSD data right channel 3) Trap value in power-on reset : I) 1 : manufactory test mode II) 0 : normal operation 4) While using external channels: I) GPO_1

203	ASDATA2		Input 4MA PD SMT	1) Audio serial data 2 (Center/LFE) DSD data left surround 2) channel Trap value in power-on reset : I) 1 : manufactory 3) test mode II) 0 : normal operation While using external 4) channels: I) GPO_0
212	ASDATA3		Input 4MA PD SMT	1) Audio serial data 3 (Center-back/ Center-left-back/Center-right-back, in 6.1 or 7.1 mode) 2) DSD data right surround channel 3) Trap value in power-on reset : I) 1 : manufactory test mode II) 0 : normal operation 4) While only 2 channels output: I) GPO_0
214	ASDATA4	INT1#	Input 4MA PD SMT	1) Audio serial data 4 (Down-mixed Left/Right) 2) DSD data center channel 3) Trap value in power-on reset : I) 1 : manufactory test mode II) 0 : normal operation 4) While only 2 channels output: I) Microcontroller external interrupt 1 II) GPO_0
215	MC_DATA	INT2#	Input PD SMT	1) Microphone serial input 2) While not support Microphone: I) Microcontroller external interrupt 2 II) GPO_0
216	SPDIF		Output 2~16MA, SR : ON/OFF Non-pull	SPDIF output

217	APLLVDD3		Power	3.3V Power pin for audio clock circuitry
218	APLLCAP		Analog Input	APLL External Capacitance connection
219	APLLVSS		Ground	Ground pin for audio clock circuitry
220	ADACVSS2		Ground	Ground pin for AUDIO DAC circuitry
221	ADACVSS1		Ground	Ground pin for AUDIO DAC circuitry
222	ARF	GPIO	Output	1) AUDIO DAC Sub-woofer channel output While internal 2) AUDIO DAC not used: GPIO
223	ARS	GPIO	Output	1) AUDIO DAC Right Surround channel output 2) While internal AUDIO DAC not used: a. SDATA3 b. GPIO
224	AR	GPIO	Output	1) AUDIO DAC Right channel output 2) While internal AUDIO DAC not used: a. SDATA1 b. GPIO
225	AVCM		Analog	AUDIO DAC reference voltage
226	AL	GPIO	Output	1) AUDIO DAC Left Surround channel output 2) While internal AUDIO DAC not used: a. SDATA2 b. GPIO
227	ALS	GPIO	Output	1) AUDIO DAC Left Surround channel output 2) While internal AUDIO DAC not used: a. SDATA0 b. GPIO
228	ALF	GPIO	Output	1) AUDIO DAC Center channel output

				2) While internal AUDIO DAC not used:GPIO
229	ADACVDD1		Power	3.3V power pin for AUDIO DAC circuitry
230	ADACVDD2		Power	3.3V power pin for AUDIO DAC circuitry

Video Interface (18)				
196	DACVDDC		Power	3.3V power pin for VIDEO DAC circuitry
195	VREF		Analog	Bandgap reference voltage
194	FS		Analog	Full scale adjustment
193	YUV0	CIN	Output 4MA, SR	1) Video data output bit 0 2) Compensation capacitor
192	DACVSSC		Ground	Ground pin for VIDEO DAC circuitry
191	YUV1	Y	Output 4MA, SR	1) Video data output bit 1 2) Analog Y output
190	DACVDDB		Power	3.3V power pin for VIDEO DAC circuitry
189	YUV2	C	Output 4MA, SR	1) Video data output bit 2 2) Analog chroma output
188	DACVSSB		Ground	Ground pin for VIDEO DAC circuitry
187	YUV3	CVBS	Output 4MA, SR	1) Video data output bit 3 2) Analog composite output

186	DACVDDA		Power	3.3V power pin for VIDEO DAC circuitry
185	YUV4	Y/G	Output 4MA, SR	1) Video data output bit 4 2) Green or Y
184	DACVSSA		Ground	Ground pin for VIDEO DAC circuitry
183	YUV5	B/Cb/Pb	Output 4MA, SR	1) Video data output bit 5 2) Blue or CB
182	YUV6	R/Cr/Pr	Output 4MA, SR	1) Video data output bit 6 2) Red or CR
181	VSYN	V_ADIN1	Input 4MA, SR SMT Non-pull	1) Vertical sync input/output 2) While no External TV-encoder: I) Vertical sync for video-input II) Version AD input port 1 III) GPIO
180	YUV7	INT3# ASDATA5	Input 4MA, SR SMT Non-pull	1) Video data output bit 7 2) While no External TV-encoder: I) Microcontroller external interrupt 3 II) Audio serial data 5 part II : DSD data sub-woofer channel or Microphone output III) GPIO
179	HSYN	INT4# V_ADIN2	Input 4MA, SR SMT Non-pull	1) Horizontal sync input/output 2) While no External TV-encoder: I) Horizontal sync for video-input II) Microcontroller external interrupt 4 III) Version AD input port 2 IV) GPIO
MISC (12)				
46	USB_VSS		USB Ground	USB ground pin
47	USBP		Analog Input	USB port DPLUS analog pin
48	USBM		Analog Input	USB port DMINUS analog pin
49	USB_VDD3		USB Power	USB Power pin 3.3V
108	PRST#		Input PU, SMT	Power on reset input, active low
107	ICE		Input PD, SMT	Microcontroller ICE mode enable
233	XTALO		Output	27M crystal out

234	XTALI		Input	27M crystal in
201	GPIO_3		Input Pull-Down	GPIO
200	GPIO_4		Input Pull-Down	GPIO
199	RCLKB	GPIO_5	Input Pull-Up	GPIO
198	RVREF	GPIO_6	Input Pull-Up	GPIO

Dram Interface (58) (Sorted by position)				
176	C_0	IO_0 (RD16)	Input Non-pull	1) Digital Video output C bit 0 2) GPIO
175	C_1	IO_1 (RD17)	Input Non-pull	1) Digital Video output C bit 1 2) GPIO
173	C_2	IO_2 (RD18)	Input Non-pull	1) Digital Video output C bit 2 2) GPIO
172	C_3	IO_3 (RD19)	Input Non-pull	1) Digital Video output C bit 3 2) GPIO
171	C_4	IO_4 (RD20)	Input Non-pull	1) Digital Video output C bit 4 2) GPIO
169	C_5	IO_5 (RD21)	Input Non-pull	1) Digital Video output C bit 5 2) GPIO
168	C_6	IO_6 (RD22)	Input Non-pull	1) Digital Video output C bit 6 2) GPIO
167	C_7	IO_7 (RD23)	Input Non-pull	1) Digital Video output C bit 7 2) GPIO

177	IO_17	(DQM2)	Input Non-pull	GPIO
166	YUVCLK	IO_8 (DQM3)	Input Non-pull	1) Digital Video output Clock 2) GPIO
165	Y_0	IO_9 (RD24)	Input Non-pull	1) Digital Video output Y bit 0 2) GPIO
164	Y_1	IO_10 (RD25)	Input Non-pull	1) Digital Video output Y bit 1 2) GPIO
163	Y_2	IO_11 (RD26)	Input Non-pull	1) Digital Video output Y bit 2 2) GPIO
162	Y_3	IO_12 (RD27)	Input Non-pull	1) Digital Video output Y bit 3 2) GPIO
161	Y_4	IO_13 (RD28)	Input Non-pull	1) Digital Video output Y bit 4 2) GPIO
159	Y_5	IO_14 (RD29)	Input Non-pull	1) Digital Video output Y bit 5 2) GPIO
158	Y_6	IO_15 (RD30)	Input Non-pull	1) Digital Video output Y bit 6 2) GPIO
157	Y_7	IO_16 (RD31)	Input Non-pull	1) Digital Video output Y bit 7 2) GPIO

155	RA4		Input	DRAM address 4
154	RA5		Input	DRAM address 5
153	RA6		Input	DRAM address 6
152	RA7		Input	DRAM address 7

151	RA8		Input	DRAM address 8
150	RA9		Input	DRAM address 9
149	RA11		Input Pull-Down	DRAM address bit 11
147	CKE		output	DRAM clock enable
146	RCLK		Input	Dram clock
144	RA3		Input	DRAM address 3
143	RA2		Input	DRAM address 2
141	RA1		Input	DRAM address 1
140	RA0		Input	DRAM address 0
139	RA10		Input	DRAM address 10
138	BA1		Input	DRAM bank address 1
137	BA0		Input	DRAM bank address 0
136	RCS#		output	DRAM chip select, active low
135	RAS#		output	DRAM row address strobe, active low
134	CAS#		output	DRAM column address strobe, active low
133	RWE#		output	DRAM Write enable, active low
132	DQM1		Input	Data mask 1
130	IO_18	(DQS1)	Input Non-pull	GPIO
129	RD8		Input	DRAM data 8
128	RD9		Input	DRAM data 9

127	RD10		Input	DRAM data 10
126	RD11		Input	DRAM data 11
125	RD12		Input	DRAM data 12
124	RD13		Input	DRAM data 13
123	RD14		Input	DRAM data 14
122	RD15		Input	DRAM data 15
121	RD0		Input	DRAM data 0
120	RD1		Input	DRAM data 1
119	RD2		Input	DRAM data 2
117	RD3		Input	DRAM data 3
116	RD4		Input	DRAM data 4
115	RD5		Input	DRAM data 5
114	RD6		Input	DRAM data 6
113	RD7		Input	DRAM data 7
112	IO_19	(DQS0)	Input Non-pull	GPIO
111	DQM0		Input	Data mask 0

JTAG Interface(4)					
51	TDI	V_ADIN4	Input Non-pull	1) 2) 3)	Serial interface port 3 data-out Version AD input port 4 GPIO
52	TMS	V_ADIN5	Input Non-pull	1) 2) 3)	Serial interface port 3 data-in Version AD input port 5 GPIO
53	TCK	V_ADIN6	Input Non-pull	1) 2) 3)	Serial interface port 3 clock pin Version AD input port 6 GPIO

54	TDO	V_ADIN7	Input Non-pull	1) 2) 3)	Serial interface port 3 chip-select Version AD input port 7 GPO

Note:
1. The Main column is the main function, Alt. Means alternative function.
2. The multi-function GPIO pins are set to green characters.
3. The video input port and external TV encoder mode can not both use CCIR-601 mode, at least one of them should be in CCIR-656 mode.
4. Following is a summary of modified pins.
   (a) Pin 48, 49, 50, 51 are no longer for JTAG functions.
   (b) V_ADIN0 and V_ADIN3 is not available.

4. BA5954

●Description

BA5954FP/FM is an actuator driver IC for CD-ROM and DVD players. This actuator driver adopts current feedback system. This IC incorporates 2 channel actuator drivers and 2 channel motor drivers. Current phase lag influenced load inductance is little, because this type is current feedback.

●Dimension (Units : mm)

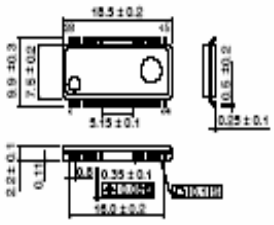

HSOP28 / HSOP-M28

●Features

1) Wide dynamic range
   VOM4.0V(typ.) at PreVcc=12V,PVcc=5V,RL=8Ω
2) Level shift circuit built in.
3) Thermal-shut-down circuit built in.
4) Stand-by mode built in.

●Applications

CD/CD-ROM

●Absolute Maximum Ratings (Ta=25°C)

Parameter	Symbol	Limits		Unit
Supply voltage	Vcc, PVcc1/2	18		V
Power dissipation	Pd	(BA5954FP) *1 1.7	(BA5954FM) *2 2.2	W
Operating temperature range	Topr	−35 ~ +85		°C
Storage temperature range	Tstg	−55 ~ +150		°C

* PCB (70mmx70mm, t=1.6mm) glass epoxy mounting.
*1 Derating : 18.6mW/°C for operation above Ta=25°C
*2 Derating : 17.6mW/°C for operation above Ta=25°C

●Recommended Operating Conditions (Ta=25°C)

Parameter	Symbol	Limits	Unit
Power supply voltage	Vcc	4.3 ~ 13.2	V
	PVcc1	4.3 ~ Vcc	V
	PVcc2	4.3 ~ Vcc	V

● Electrical characteristics

(Unless otherwise specified T_a=25℃, Vcc=12V, PVcc1=PVcc2=5V, BIAS=2.5V, R_L=8Ω/10Ω, R_d=0.5Ω, C=100pF)

Parameter	Symbol	Limit			Unit	Conditions	P.S
		Min	Typ	Max			
Quiescent current	I_{cc}	-	18	27	mA		
Standby quiescent current	I_{st}	-	-	0.5	mA		
Voltage for standby ON	V_{ston}	0	-	0.5	V		
Voltage for standby OFF	V_{stoff}	2.0	-	5	V		
<Actuator drivers>							
Output offset current	I_{oo}	-	-	±6	mA		
Maximum output voltage	V_{om}	3.6	4.0	-	V	@10ΩLoad	
Transconductance	gm	-	1/Rd	-	A/V	VIN=BIAS+0.2Vpp ac @1KHz	
<Sled motor driver/Pre OPAMP>							
Common mode input range	V_{icm}	1	-	10	V		
Input current	I_{ib}	-	-50	-300	nA		
Low level output voltage	V_{olop}	-	0.1	0.3	V	@1mA	
High level output voltage	V_{olop}	11	11.3		V	@-0.3mA	
Output source current	I_{src}	0.3	0.5	-	mA		
Output sink current	I_{sink}	1	2	-	mA		
<Sled motor driver>							
Output offset voltage	V_{oofsl}	-	-	±100	mV		
Maximum output voltage	V_{omsl}	7.5	9.0	-	V	@8Ω Load	
Closed loop voltage gain	G_{vsl}	18	20	22	dB	VIN=BIAS+0.2Vpp ac @1KHz	
<Loading motor driver>							
Output offset voltage	V_{oofld}	-	-	±50	mV		
Maximum output voltage	V_{omax}	3.6	4.0	-	V	@8Ω Load	
Voltage gain	G_{vld}	13.3	15.5	17.5	dB	VIN=BIAS+0.2Vpp ac @1KHz	
Gain error by polarity	ΔG_{vld}	0	1	2	dB	VIN=BIAS+0.2Vpp ac @1KHz	

*This device is not designed for protection against radioactive rays.

● **Application circuit**

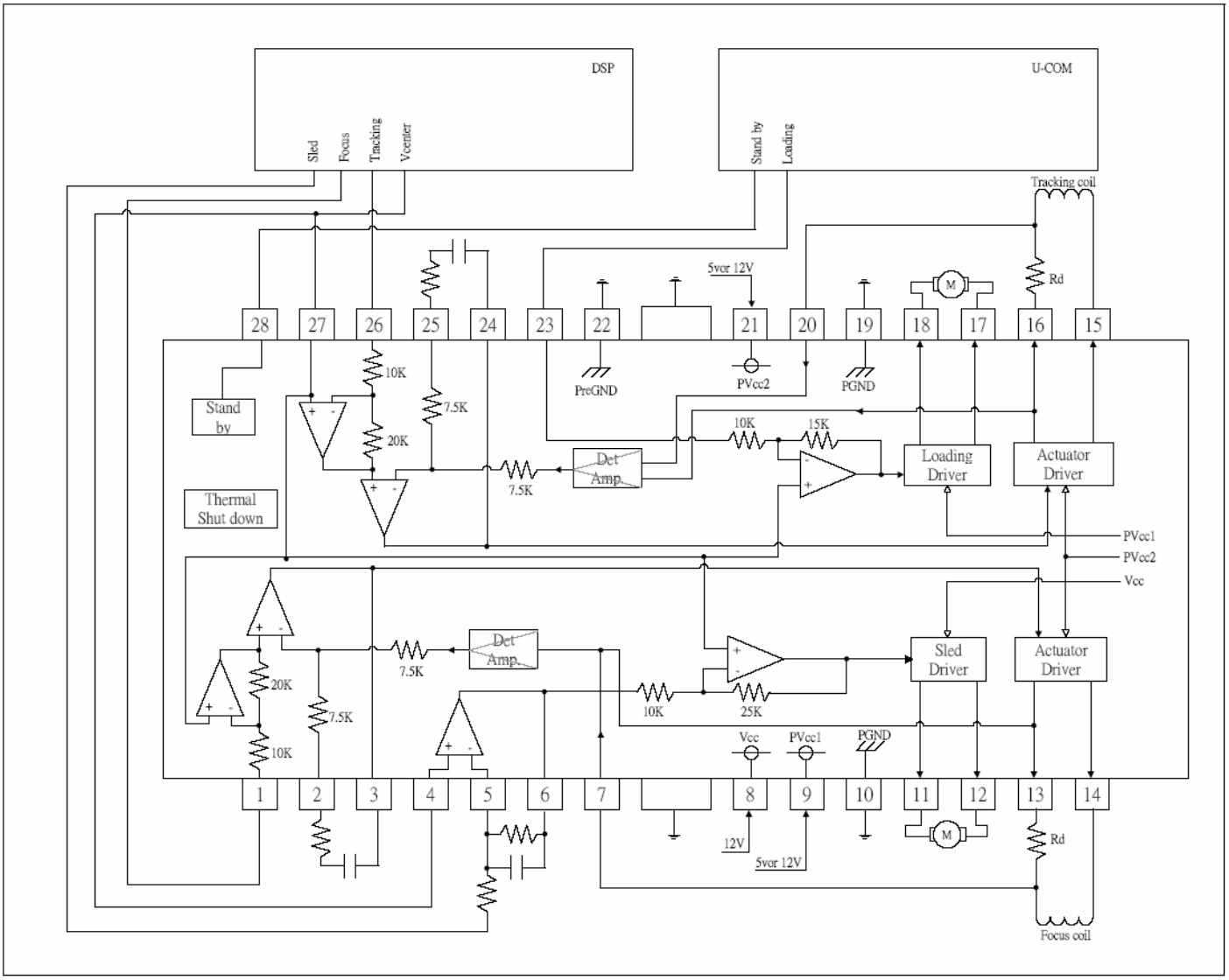

5. BA6208F

The BA6208F is monolithic ICs used for driving reversible motors. It allows control of reversible motors in cassette players and other electrical equipment by using TTL-level logic signals. The IC contains a logic section, which controls forward and reverse rotations as well as forced stop, and an output power section, which can supply an output current of up to 100mA (typical) according to the logic control.

●Features

1) Motor driving power transistors are built in (100mA typically).
2) Brake is applied when stopping the motor (when inputs A and B are both HIGH level).
3) Built-in diode to absorb surge currents.
4) Very low standby circuit current when inputs A and B are both LOW level.
5) Wide range of operating supply voltage (4.5 ~ 15.0V).
6) Direct control with the TTL logic.

●Absolute maximum ratings (Ta = 25°C)

Parameter		Symbol	Limits	Unit
Power supply voltage		V_{CC}	18	V
Power dissipation	BA6208	Pd	700*1	mW
	BA6208F	Pd	450*2	
Operating temperature		Topr	−20~+60	℃
Storage temperature		Tstg	−55~+125	℃
Maximum output current		I_{OUT}	500	mA

*1 Reduced by 7 mW for each increase in Ta of 1℃ over 25℃.
*2 Reduced by 4.5 mW for each increase in Ta of 1℃ over 25℃.

●Recommended operating conditions (Ta = 25°C)

Parameter	Symbol	Min.	Typ.	Max.	Unit
Power supply voltage	V_{CC}	4.5	—	15	V

●Input truth table

3pin (Ain)	2pin (Bin)	8pin (Aout)	7pin (Bout)
H	L	H	L
L	H	L	H
H	H	L	L
L	L	OPEN	OPEN

Note : HIGH level input is 2.0 V or more.
LOW level input is 0.8 V or less.

●Electrical characteristics (unless otherwise noted, Ta = 25°C and V_{CC} = 9V)

Parameter	Symbol	Min.	Typ.	Max.	Unit	Conditions
Output current	I_O	200	—	—	mA	
Output saturation voltage	V_{CE}	—	—	1.6	V	I_O=100mA
Input high level voltage	V_{IH}	2.0	—	—	V	
Input low level voltage	V_{IL}	—	—	0.8	V	
Standby supply current	I_{ST}	—	—	0.4	mA	When inputs A and B are both LOW level
Input high level current	I_{IH}	—	—	400	μA	V_{IH}=4.5V

A diode that absorbs at least 500 mA is built in to give protection against surge currents with a pulse width of 10 ms and a duty ratio of 10% or less.

7. MX29LV160BT

16M-BIT[2Mx8/1Mx16]CMOS SINGLE VOLTAGE 3V ONLY FLASHMEMORY

FEATURES

- Extended single - supply voltage range 2.7V to 3.6V
- 2,097,152 x 8/1,048,576 x 16 switchable
- Single power supply operation
  - 3.0V only operation for read, erase and program operation
- **Fully compatible with MX29LV160A device**
- Fast access time: 55/70ns
- Low power consumption
  - 30mA maximum active current
  - 0.2uA typical standby current
- Command register architecture
  - Byte/word Programming (9us/11us typical)
  - Sector Erase (Sector structure 16K-Bytex1, 8K-Bytex2, 32K-Bytex1, and 64K-Byte x31)
- Auto Erase (chip & sector) and Auto Program
  - Automatically erase any combination of sectors with Erase Suspend capability.
  - Automatically program and verify data at specified address
- Erase Suspend/Erase Resume
  - Suspends sector erase operation to read data from, or program data to, any sector that is not being erased, then resumes the erase.
- Status Reply
  - Data polling & Toggle bit for detection of program and erase operation completion.
- Ready/$\overline{\text{Busy}}$ pin (RY/$\overline{\text{BY}}$)
  - Provides a hardware method of detecting program or erase operation completion.
- Sector protection
  - Hardware method to disable any combination of sectors from program or erase operations
  - Temporary sector unprotect allows code changes in previously locked sectors.
- CFI (Common Flash Interface) compliant
  - Flash device parameters stored on the device and provide the host system to access
- 100,000 minimum erase/program cycles
- Latch-up protected to 100mA from -1V to VCC+1V
- Boot Sector Architecture
  - T = Top Boot Sector
  - B = Bottom Boot Sector
- Low VCC write inhibit is equal to or less than 1.4V
- Package type:
  - 44-pin SOP
  - 48-pin TSOP
  - 48-ball CSP
- Compatibility with JEDEC standard
  - Pinout and software compatible with single-power supply Flash

GENERAL DESCRIPTION

The MX29LV160BT/BB is a 16-mega bit Flash memory organized as 2M bytes of 8 bits or 1M words of 16 bits. MXIC's Flash memories offer the most cost-effective and reliable read/write non-volatile random access memory. The MX29LV160BT/BB is packaged in 44-pin SOP, 48-pin TSOP and 48-ball CSP. It is designed to be reprogrammed and erased in system or in standard EPROM programmers.

The standard MX29LV160BT/BB offers access time as fast as 55ns, allowing operation of high-speed microprocessors without wait states. To eliminate bus contention, the MX29LV160BT/BB has separate chip enable ($\overline{\text{CE}}$) and output enable ($\overline{\text{OE}}$) controls.

MXIC's Flash memories augment EPROM functionality with in-circuit electrical erasure and programming. The MX29LV160BT/BB uses a command register to manage this functionality. The command register allows for 100% TTL level control inputs and fixed power supply levels during erase and programming, while maintaining maximum EPROM compatibility.

MXIC Flash technology reliably stores memory contents even after 100,000 erase and program cycles. The MXIC cell is designed to optimize the erase and programming mechanisms. In addition, the combination of advanced tunnel oxide processing and low internal electric fields for erase and program operations produces reliable cycling. The MX29LV160BT/BB uses a 2.7V~3.6V VCC supply to perform the High Reliability Erase and auto Program/Erase algorithms.

The highest degree of latch-up protection is achieved with MXIC's proprietary non-epi process. Latch-up protection is proved for stresses up to 100 milliamps on address and data pin from -1V to VCC + 1V.

PIN CONFIGURATIONS

44 SOP(500 mil)

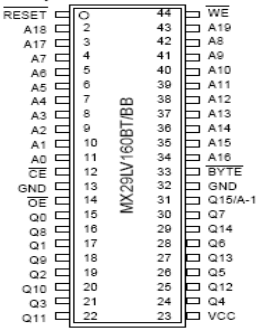

PIN DESCRIPTION

SYMBOL	PIN NAME
A0~A19	Address Input
Q0~Q14	Data Input/Output
Q15/A-1	Q15(Word mode)/LSB addr(Byte mode)
$\overline{CE}$	Chip Enable Input
$\overline{WE}$	Write Enable Input
$\overline{BYTE}$	Word/Byte Selection input
$\overline{RESET}$	Hardware Reset Pin/Sector Protect Unlock
$\overline{OE}$	Output Enable Input
RY/$\overline{BY}$	Ready/Busy Output
VCC	Power Supply Pin (2.7V~3.6V)
GND	Ground Pin

48 TSOP (Standard Type) (12mm x 20mm)

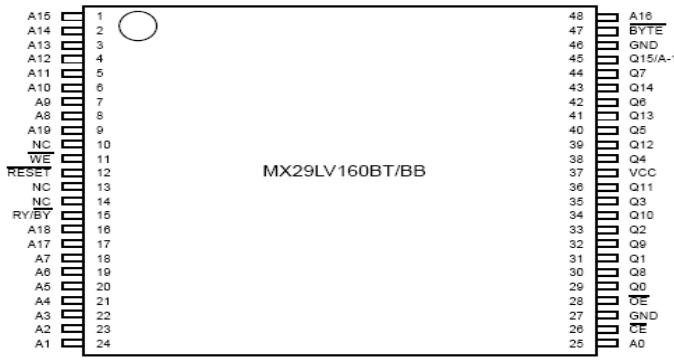

DC CHARACTERISTICS TA = -40°C TO 85°C, VCC = 2.7V~3.6V

Symbol	PARAMETER	MIN.	TYP	MAX.	UNIT	CONDITIONS	
ILI	Input Leakage Current			± 1	uA	VIN = VSS to VCC, VCC=VCC max	
ILIT	A9 Input Leakage Current			35	uA	VCC=VCC max; A9=12.5V	
ILO	Output Leakage Current			± 1	uA	VOUT = VSS to VCC, VCC=VCC max	
ICC1	VCC Active Read Current		9	16	mA	$\overline{CE}$=VIL, $\overline{OE}$=VIH	@5MHz
			2	4	mA	(Byte Mode)	@1MHz
			9	16	mA	$\overline{CE}$=VIL, $\overline{OE}$=VIH	@5MHz
			2	4	mA	(Word Mode)	@1MHz
ICC2	VCC Active write Current		20	30	mA	$\overline{CE}$=VIL, $\overline{OE}$=VIH, $\overline{WE}$=VIL	
ICC3	VCC Standby Current		0.2	5	uA	$\overline{CE}$; $\overline{RESET}$=VCC ± 0.3V	
ICC4	VCC Standby Current During Reset (See Conditions)		0.2	5	uA	$\overline{RESET}$=VSS ± 0.3V	
ICC5	Automatic sleep mode		0.2	5	uA	VIH=VCC ± 0.3V;VIL=VSS ± 0.3V	
VIL	Input Low Voltage (Note 1)	-0.5		0.8	V		
VIH	Input High Voltage	0.7xVCC		VCC+ 0.3	V		
VID	Voltage for Automatic Select and Temporary Sector Unprotect	11.5		12.5	V	VCC=3.3V	
VOL	Output Low Voltage			0.45	V	IOL = 4.0mA, VCC= VCC min	
VOH1	Output High Voltage (TTL)	0.85xVCC				IOH = -2mA, VCC=VCC min	
VOH2	Output High Voltage (CMOS)	VCC-0.4				IOH = -100uA, VCC min	
VLKO	Low VCC Lock-out Voltage	1.4		2.1	V		

NOTES:
1. VIL min. = -1.0V for pulse width is equal to or less than 50 ns.
   VIL min. = -2.0V for pulse width is equal to or less than 20 ns.
2. VIH max. = VCC + 1.5V for pulse width is equal to or less than 20 ns
   If VIH is over the specified maximum value, read operation cannot be guaranteed.
3. Automatic sleep mode enable the low power mode when addresses remain stable for tACC +30ns.

8. AT24C16

2-Wire Serial CMOS E^{2}PROM 16k (2048 x 8)

The AT24C16 provides 16384 bits of serial electrically erasable and programmable read only memory (EEPROM)

organized as 2048 words of 8 bits each. The device is optimized for use in many industrial and commercial applications where low power and low voltage operation are essential. The AT24C16 is available in space saving 8-pin PDIP, 8-pin and 14-pin SOIC packages and is accessed via a 2-wire serial interface. In addition, the entire family is available in 5.0V (4.5V to 5.5V), 2.7V (2.7V to 5.5V) and 1.8V (1.8V to 5.5V) versions.

Features

- Low Voltage and Standard Voltage Operation
  - 5.0 (V_{CC} = 4.5V to 5.5V)
  - 2.7 (V_{CC} = 2.7V to 5.5V)
  - 2.5 (V_{CC} = 2.5V to 5.5V)
  - 1.8 (V_{CC} = 1.8V to 5.5V)
- Internally Organized 128 x 8 (1K), 256 x 8 (2K), 512 x 8 (4K), 1024 x 8 (8K) or 2048 x 8 (16K)
- 2-Wire Serial Interface
- Bidirectional Data Transfer Protocol
- 100 kHz (1.8V, 2.5V, 2.7V) and 400 kHz (5V) Compatibility
- Write Protect Pin for Hardware Data Protection
- 8-Byte Page (1K, 2K), 16-Byte Page (4K, 8K, 16K) Write Modes
- Partial Page Writes Are Allowed
- Self-Timed Write Cycle (10 ms max)
- High Reliability
  - Endurance: 1 Million Cycles
  - Data Retention: 100 Years
- Automotive Grade and Extended Temperature Devices Available
- 8-Pin and 14-Pin JEDEC SOIC and 8-Pin PDIP Packages

Pin Configurations

Pin Name	Function
A_0 to A_2	Address Inputs
SDA	Serial Data
SCL	Serial Clock Input
WP	Write Protect
NC	No Connect

8-Pin PDIP

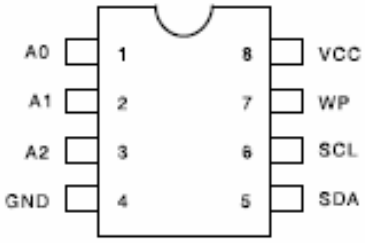

14-Pin SOIC

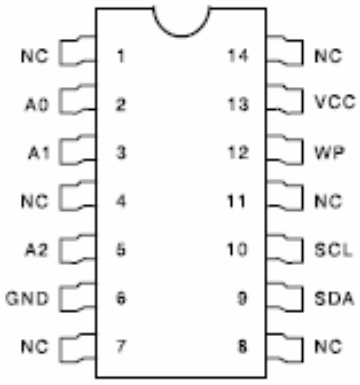

8-Pin SOIC

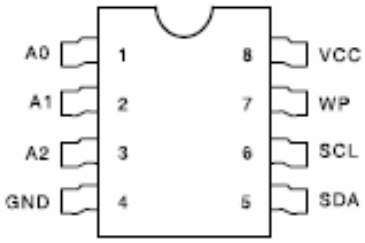

Pin Capacitance [1]

Applicable over recommended operating range from T_A = 25°C, f = 1.0 MHz, V_{CC} = +1.8V.

Symbol	Test Condition	Max	Units	Conditions
$C_{I/O}$	Input/Output Capacitance (SDA)	8	pF	$V_{I/O}$ = 0V
C_{IN}	Input Capacitance (A_0, A_1, A_2, SCL)	6	pF	V_{IN} = 0V

Note: 1. This parameter is characterized and is not 100% tested.

DC Characteristics

Applicable over recommended operating range from: T_{AI} = -40°C to +85°C, V_{CC} = +1.8V to +5.5V, T_{AC} = 0°C to +70°C, V_{CC} = +1.8V to +5.5V (unless otherwise noted).

Symbol	Parameter	Test Condition	Min	Typ	Max	Units
V_{CC1}	Supply Voltage		1.8		5.5	V
V_{CC2}	Supply Voltage		2.5		5.5	V
V_{CC3}	Supply Voltage		2.7		5.5	V
V_{CC4}	Supply Voltage		4.5		5.5	V
I_{CC}	Supply Current V_{CC} = 5.0V	READ at 100 kHz		0.4	1.0	mA
I_{CC}	Supply Current V_{CC} = 5.0V	WRITE at 100 kHz		2.0	3.0	mA
I_{SB1}	Standby Current V_{CC} = 1.8V	V_{IN} = V_{CC} or V_{SS}		0.6	3.0	µA
I_{SB2}	Standby Current V_{CC} = 2.5V	V_{IN} = V_{CC} or V_{SS}		1.4	4.0	µA
I_{SB3}	Standby Current V_{CC} = 2.7V	V_{IN} = V_{CC} or V_{SS}		1.6	4.0	µA
I_{SB4}	Standby Current V_{CC} = 5.0V	V_{IN} = V_{CC} or V_{SS}		8.0	18.0	µA
I_{LI}	Input Leakage Current	V_{IN} = V_{CC} or V_{SS}		0.10	3.0	µA
I_{LO}	Output Leakage Current	V_{OUT} = V_{CC} or V_{SS}		0.05	3.0	µA
V_{IL}	Input Low Level [1]		-1.0		V_{CC} x 0.3	V
V_{IH}	Input High Level [1]		V_{CC} x 0.7		V_{CC} + 0.5	V
V_{OL2}	Output Low Level V_{CC} = 3.0V	I_{OL} = 2.1 mA			0.4	V
V_{OL1}	Output Low Level V_{CC} = 1.8V	I_{OL} = 0.15 mA			0.2	V

Note: 1. V_{IL} min and V_{IH} max are reference only and are not tested.

AC Characteristics

Applicable over recommended operating range from T_A = -40°C to +85°C, V_{CC} = +1.8V to +5.5V, CL = 1 TTL Gate and 100 pF (unless otherwise noted).

Symbol	Parameter	2.7-, 2.5-, 1.8-volt		5.0-volt		Units
		Min	Max	Min	Max	
f_{SCL}	Clock Frequency, SCL		100		400	kHz
t_{LOW}	Clock Pulse Width Low	4.7		1.2		µs
t_{HIGH}	Clock Pulse Width High	4.0		0.6		µs
t_I	Noise Suppression Time [1]		100		50	ns
t_{AA}	Clock Low to Data Out Valid	0.1	4.5	0.1	0.9	µs
t_{BUF}	Time the bus must be free before a new transmission can start [1]	4.7		1.2		µs
$t_{HD.STA}$	Start Hold Time	4.0		0.6		µs
$t_{SU.STA}$	Start Set-up Time	4.7		0.6		µs
$t_{HD.DAT}$	Data In Hold Time	0		0		µs
$t_{SU.DAT}$	Data In Set-up Time	200		100		ns
t_R	Inputs Rise Time [1]		1.0		0.3	µs
t_F	Inputs Fall Time [1]		300		300	ns
$t_{SU.STO}$	Stop Set-up Time	4.7		0.6		µs
t_{DH}	Data Out Hold Time	100		50		ns
t_{WR}	Write Cycle Time		10		10	ms

Note: 1. This parameter is characterized and is not 100% tested.

9. NJM4558 DUAL OPERATIONAL AMPLIFIER

■ GENERAL DESCRIPTION

The NJM4558/4559 integrated circuit is a dual high-gain operational amplifier internally compensated and constructed on a single silicon chip using an advanced epitaxial process.

Combining the features of the NJM741 with the close parameter matching and tracking of a dual device on a monolithic chip results in unique performance characteristics.Excellent channel separation allow the use of the dual device in single NJM741 operational amplifier applications providing density.It is especially well suited for applications in differential-in,defferential-out as well as in potentiometric amplifiers and where gain and phase matched channels are mandatory.

■ PACKAGE OUTLINE

NJM4558D
NJM4559D

NJM4558M
NJM4559M

NJM4558V
NJM4559V

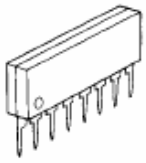

NJM4558L
NJM4559L

■ FEATURES

- Operating Voltage (±4V~±18V)
- High Voltage Gain (100dB typ.)
- High Input Resistance (5MΩ typ.)
- Package Outline DIP8,DMP8,SIP8,SSOP8
- Bipolar Technology

■ PIN CONFIGURATION

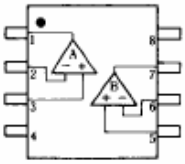

NJM4558D,NJM4558M,NJM4558V
NJM4559D,NJM4559M,NJM4559V

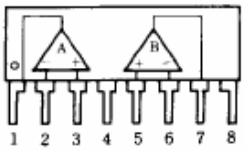

NJM4558L
NJM4559L

PIN FUNCTION
1.A OUTPUT
2.A –INPUT
3.A +INPUT
4.V⁻
5.B +INPUT
6.B –INPUT
7.B OUTPUT
8.V⁺

■ ELECTRICAL CHARACTERISTICS

(V^+/V^-=±15V,Ta=25°C)

PARAMETER	SYMBOL	TEST CONDITION	MIN.	TYP.	MAX.	UNIT
Input Offset Voltage	V_{IO}	R_S≤10kΩ	-	0.5	6	mV
Input Offset Current	I_{IO}		-	5	200	nA
Input Bias Current	I_B		-	25	500	nA
Input Resistance	R_{IN}		0.3	5	-	MΩ
Large Signal Voltage Gain	A_V	R_L≥2kΩ,V_O=±10V	86	100	-	dB
Maximum Output Voltage Swing 1	V_{OM1}	R_L≥10kΩ	± 12	± 14	-	V
Maximum Output Voltage Swing 2	V_{OM2}	R_L≥2kΩ	± 10	± 13	-	V
Input Common Mode Voltage Range	V_{ICM}		± 12	14	-	V
Common Mode Rejection Ratio	CMR	R_S≤10kΩ	70	90	-	dB
Supply Voltage Rejection Ratio	SVR	R_S≤10kΩ	76.5	90	-	dB
Operating Current	I_{CC}		-	3.5	5.7	mA
Slew Rate						
NJM4558	SR		-	1	-	V/μs
NJM4559	SR		-	2	-	V/μs
Equivalent Input Noise Voltage	V_{NI}	RIAA,R_S=2.2kΩ,30kHz LPF	-	1.4	-	μVrms
Gain Bandwidth Product	GB					
NJM4558				3		MHz
NJM4559				6		MHz

10. WM8714 24-bit, 96kHz Stereo DAC

The WM8714 is a high performance stereo DAC designed for audio applications such as DVD, home theatre systems, and digital TV. The WM8714 supports data input word lengths from 16 to 24-bits and sampling rates up to 96kHz. The WM8714 consists of a serial interface port, digital interpolation filters, multi-bit sigma delta modulators and stereo DAC in a 14-pin SOIC package.

The WM8714 has a hardware control interface for selection of audio data interface format, mute and de-emphasis.

The WM8714 supports I^2S, and right Justified audio data interfaces.

The WM8714 is an ideal device to interface to AC-3™, DTS ™, and MPEG audio decoders for surround sound applications, or for use in DVD players.

- **FEATURES**
  - Stereo DAC
  - Audio Performance
    - 95dB SNR ('A' weighted @ 48kHz) DAC
    - -90dB THD
  - DAC Sampling Frequency: 8kHz – 96kHz
  - Pin Selectable Audio Data Interface Format
    - I^2S, Right Justified or DSP
  - 3-5V Supply Operation
  - 14-pin SOIC Package
  - Pin Compatible with WM8725

- **APPLICATIONS**
  - DVD Players
  - Digital TV
  - Digital Set Top Boxes

- **Pin Description**

PIN	NAME	TYPE	DESCRIPTION
1	LRCIN	Digital input	Sample rate clock input
2	DIN	Digital input	Serial audio data input
3	BCKIN	Digital input	Bit clock input
4	NC	No connect	No internal connection
5	CAP	Analogue output	Analogue internal reference
6	VOUTR	Analogue output	Right channel DAC output
7	GND	Supply	Negative supply
8	VDD	Supply	Positive supply
9	VOUTL	Analogue output	Left channel DAC output
10	MUTE	Digital input	Soft mute control, Internal pull down High = Mute ON Low = Mute OFF
11	NC	No connect	No internal connection
12	DEEMPH	Digital input	De-emphasis select, Internal pull up High = de-emphasis ON Low = de-emphasis OFF
13	FORMAT	Digital input	Data input format select, Internal pull up Low = 16-bit right justified High = 16-24-bit I^2S
14	MCLK	Digital input	System clock input

ICS ON HI-VOLTAGE BOARD

1. BIT3193 High Performance PWM Controller

BIT3193 integrated circuit provides the essential features for general purpose PWM controller in a small low cost 16-pin package. BIT3193 has built-in a low frequency PWM generator for any specified application. BIT3193 includes latched off protection feature may make the system more reliable while compare to other similar products.

- **Features**
  - 4.5V ～ 8V operation
  - Fixed High Frequency, Voltage Mode PWM Control
  - Latched Off Protection
  - Build-In Low Frequency PWM Generator
  - Build-in UVLO

- Low Power CMOS Process
- Totem Pole Output
- 16 Pin Package

- **Applications**
  - DC/DC Converters
  - LCD TV
  - LCD Monitor
  - Notebook Computer
  - Tablet PC
  - Personal Digital Assistants
  - Navigation Phone/ Door Phone
  - Portable consumer product

- **Recommended Operating Condition:**

Supply Voltage	4.5～8V
Operating Ambient Temperature	0～70 ° C
Operating Frequency	50K～400K Hz

- **Pin Layout:**

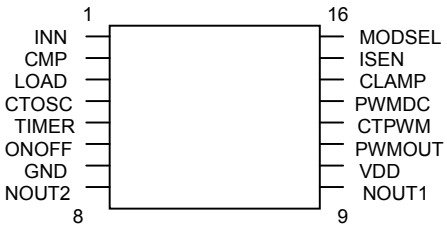

- **Pin Description**

Pin No.	Symbol	I/O	Descriptions
1	INN	I/O	The inverting input of the error amplifier.
2	CMP	O	Output of the error amplifier.
3	LOAD	I/O	A switch that connected to the high frequency triangle wave generator. This switch is open while ISEN pin <1.3V. An external resistor connected here may change the operation frequency of CTOSC in open load situation.
4	CTOSC	I/O	An external capacitor connected here can set the frequency of high frequency PWM controller.
5	TIMER	I/O	With internal reference current and an external capacitor connected here can set the required period of starting and the timing of initialization. The controller is forced to reset mode while TIMER<0.3V. During reset mode, a～60uA current will flow into the INN pin to reduce the output level of the error amplifier CMP to turn off the controller. The latched off protection function will be enable after this node is charged to>2.5V. System is latched off if any abnormal operation is detected if pin TIMER>2.5V. The output current of this pin is 20uA when TIMER<0.3V. The output current becomes to 1uA when TIMER>0.3V.
6	ONOFF	I	The control pin of turning on or off the IC.1V threshold with an internal 80K

			±15% ohm pull-low resistor.
7	GND	I/O	The ground pin of the device.
8	NOUT2	O	The number 2 output driver for driving the NMOSFET switch.
9	NOUT1	O	The number 1 output driver for driving the NMOSFET switch.
10	VDD	I	The power supplies pin of the device.
11	PWMOUT	O	The output pin of low frequency PWM generator. A 2.5V or floating two state output is provided through this pin. The internal circuit limits the max. Duty-cycle to ～92%.
12	CTPWM	I/O	With the internal reference current and an external capacitor connected here can set the operation frequency of low frequency PWM generator with 1.0V～2.5V triangle wave output.
13	PWMDC	I	Low frequency PWM controlling input. A PWM output comes out by comparing this DC input and the 1.0～2.5V triangle wave that is generated by CTPWM.
14	CLAMP	I	Over voltage clamping. If a>2.0V voltage is detected. A～60uA current will flow into the INN pin to reduce the output of the error amplifier pin CMP to regulate the output voltage.
15	ISEN	I	Load current detection pin, the open load situation is detected if a less than 1.3V input is sensed.
16	MODSEL	O	To set the output polarity of the low frequency PWM controller.

2. AP4511M N AND P-CHANNEL ENHANCEMENT MODE POWER MOSFET

▼ **Simple Drive Requirement**

▼ **Low On-resistance**

▼ **Fast Switching Performance**

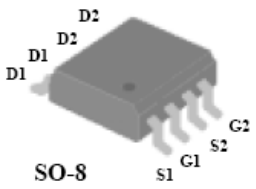

SO-8

N-CH	BV_{DSS}	35V
	$R_{DS(ON)}$	25mΩ
	I_D	7A
P-CH	BV_{DSS}	-35V
	$R_{DS(ON)}$	40mΩ
	I_D	-6.1A

Description

The Advanced Power MOSFETs from APEC provide the designer with the best combination of fast switching, ruggedized device design, low on-resistance and cost-effectiveness.

The SO-8 package is universally preferred for all commercial-industrial surface mount applications and suited for low voltage applications such as DC/DC converters.

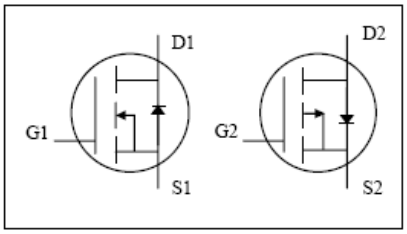

Absolute Maximum Ratings

Symbol	Parameter	Rating		Units
		N-channel	P-channel	
V_{DS}	Drain-Source Voltage	35	-35	V
V_{GS}	Gate-Source Voltage	±20	±20	V
I_D@T_A=25℃	Continuous Drain Current[3]	7	-6.1	A
I_D@T_A=70℃	Continuous Drain Current[3]	5.7	-5	A
I_{DM}	Pulsed Drain Current[1]	30	-30	A
P_D@T_A=25℃	Total Power Dissipation	2.0		W
	Linear Derating Factor	0.016		W/℃
T_{STG}	Storage Temperature Range	-55 to 150		℃
T_J	Operating Junction Temperature Range	-55 to 150		℃

Thermal Data

Symbol	Parameter		Value	Unit
Rthj-a	Thermal Resistance Junction-ambient[3]	Max.	62.5	℃/W

Part 4 Detailed Circuit

MAIN BOARD

1. Power

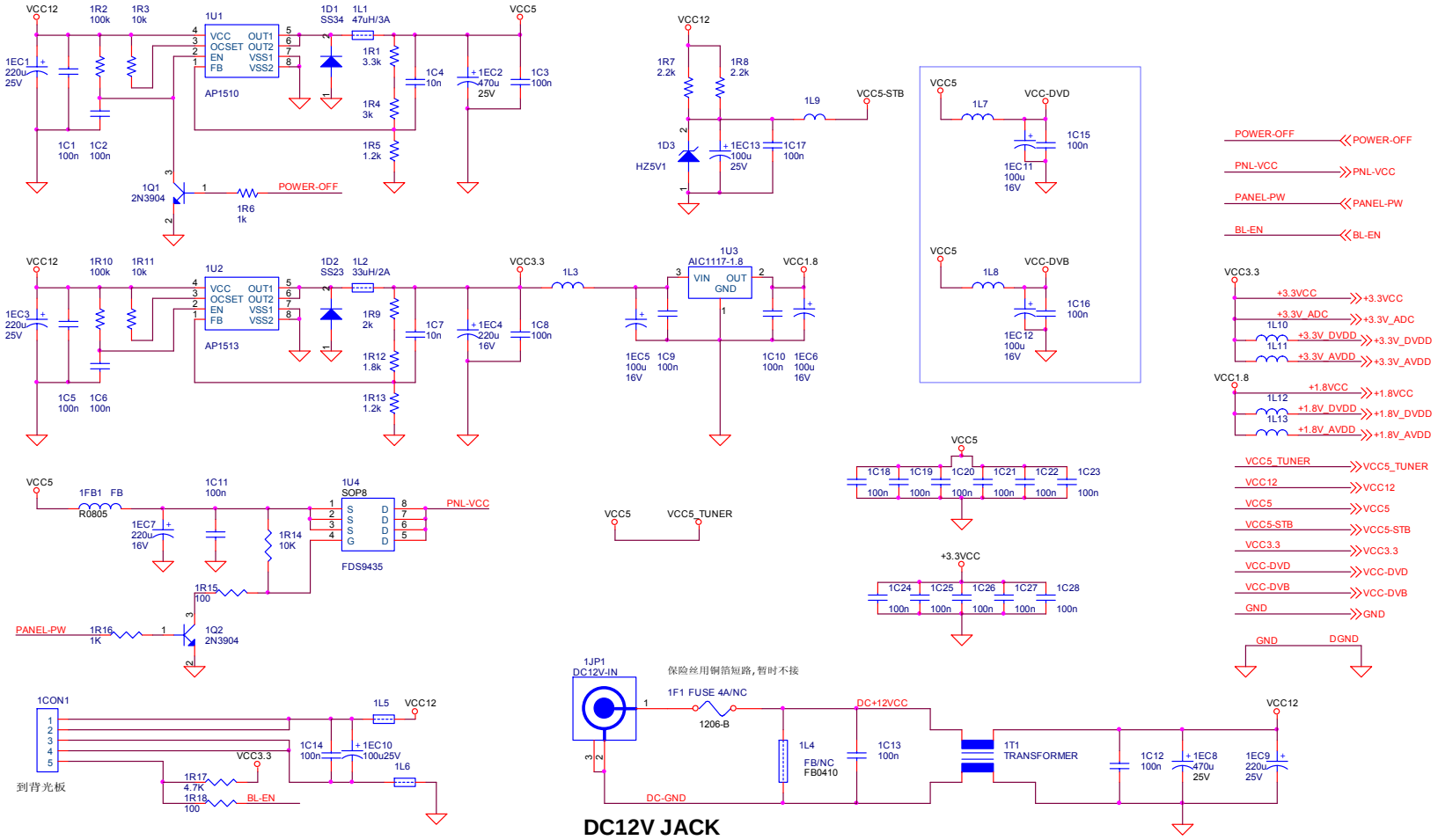

DC12V JACK

2. Hudson_Europe

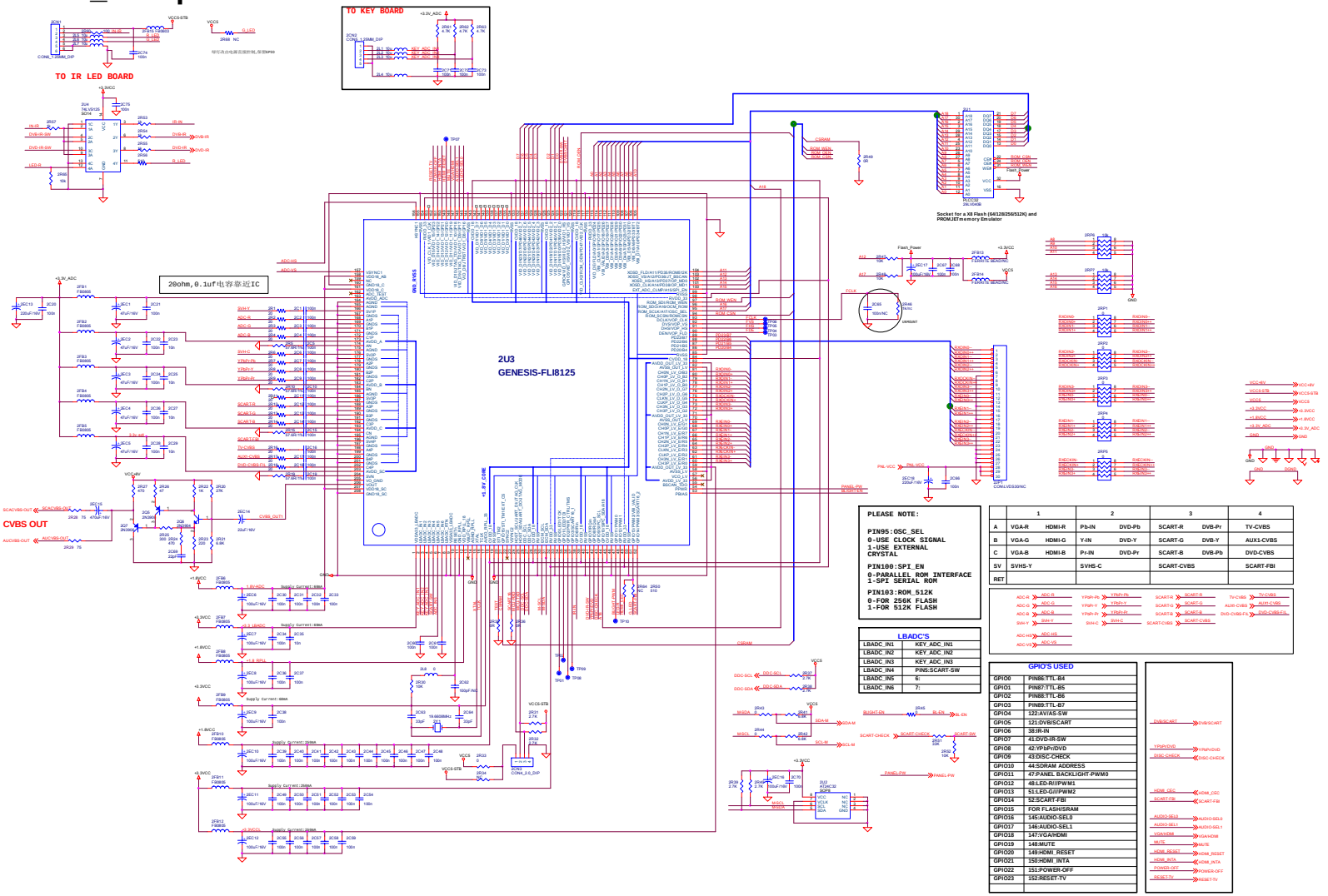

	1	2	3	4
A	VGA-R	HDMI-R	Pb-IN	DVD-Pb	SCART-R	DVB-Pr	TV-CVBS
B	VGA-G	HDMI-G	Y-IN	DVD-Y	SCART-G	DVB-Y	AUX1-CVBS
C	VGA-B	HDMI-B	Pr-IN	DVD-Pr	SCART-B	DVB-Pb	DVD-CVBS
SV	SVHS-Y		SVHS-C		SCART-CVBS		SCART-FBI
RET							

LBADC'S	
LBADC_IN1	KEY_ADC_IN1
LBADC_IN2	KEY_ADC_IN2
LBADC_IN3	KEY_ADC_IN3
LBADC_IN4	PINS:SCART-SW
LBADC_IN5	6:
LBADC_IN6	7:

GPIO'S USED	
GPIO0	PIN86:TTL-B4
GPIO1	PIN87:TTL-B5
GPIO2	PIN88:TTL-B6
GPIO3	PIN89:TTL-B7
GPIO4	122:AV/AS-SW
GPIO5	121:DVB/SCART
GPIO6	38:IR-IN
GPIO7	41:DVD-IR-SW
GPIO8	42:YPbPr/DVD
GPIO9	43:DISC-CHECK
GPIO10	44:SDRAM ADDRESS
GPIO11	47:PANEL BACKLIGHT-PWM0
GPIO12	48:LED-R/IIPWM1
GPIO13	51:LED-G/IIPWM2
GPIO14	52:SCART-FBI
GPIO15	FOR FLASH/SRAM
GPIO16	145:AUDIO-SEL0
GPIO17	146:AUDIO-SEL1
GPIO18	147:VGA/HDMI
GPIO19	148:MUTE
GPIO20	149:HDMI_RESET
GPIO21	150:HDMI_INTA
GPIO22	151:POWER-OFF
GPIO23	152:RESET-TV

3. Interface

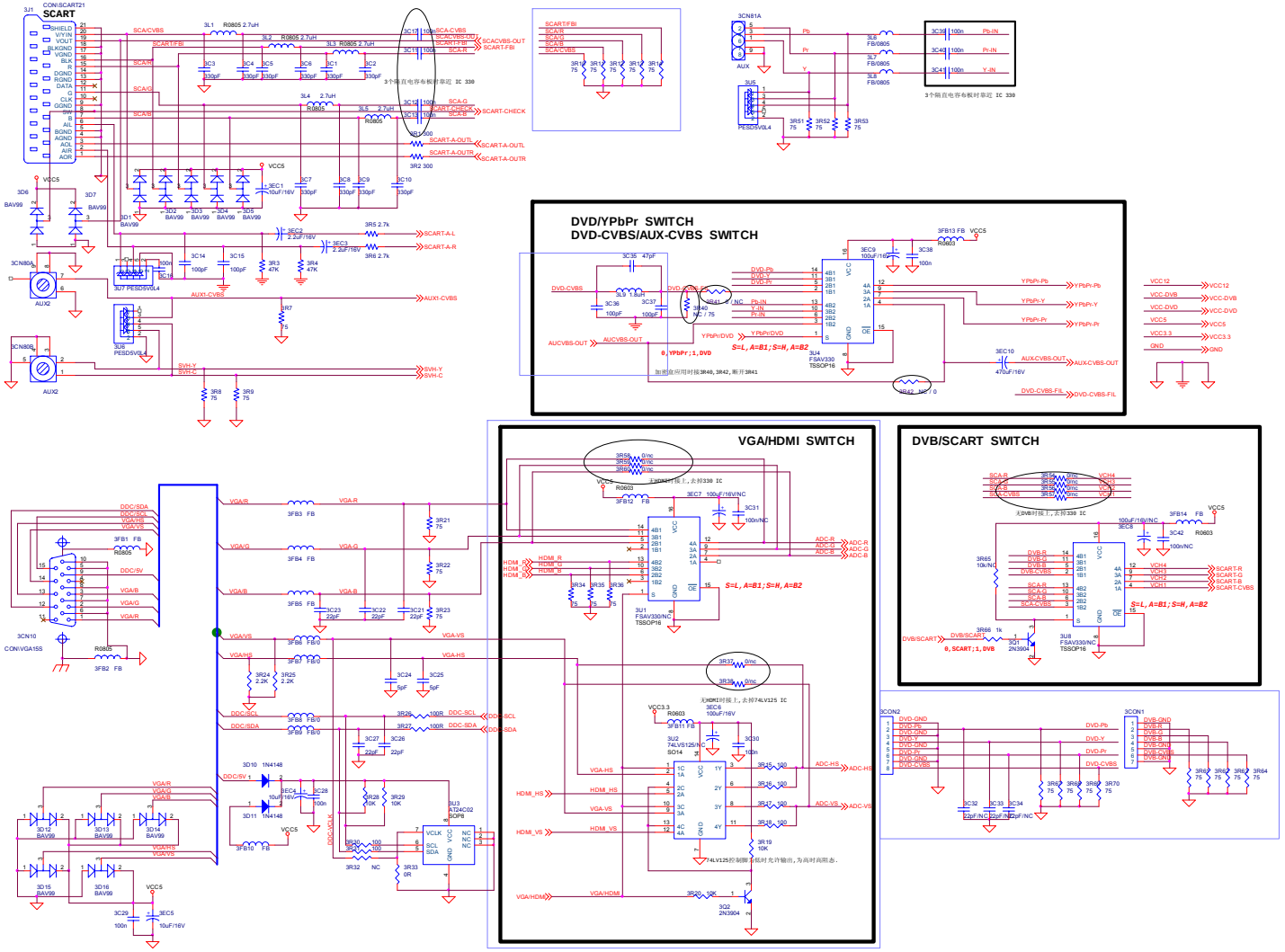
SCART
DVD/YPbPr SWITCH
DVD-CVBS/AUX-CVBS SWITCH
VGA/HDMI SWITCH
DVB/SCART SWITCH

4. Audio

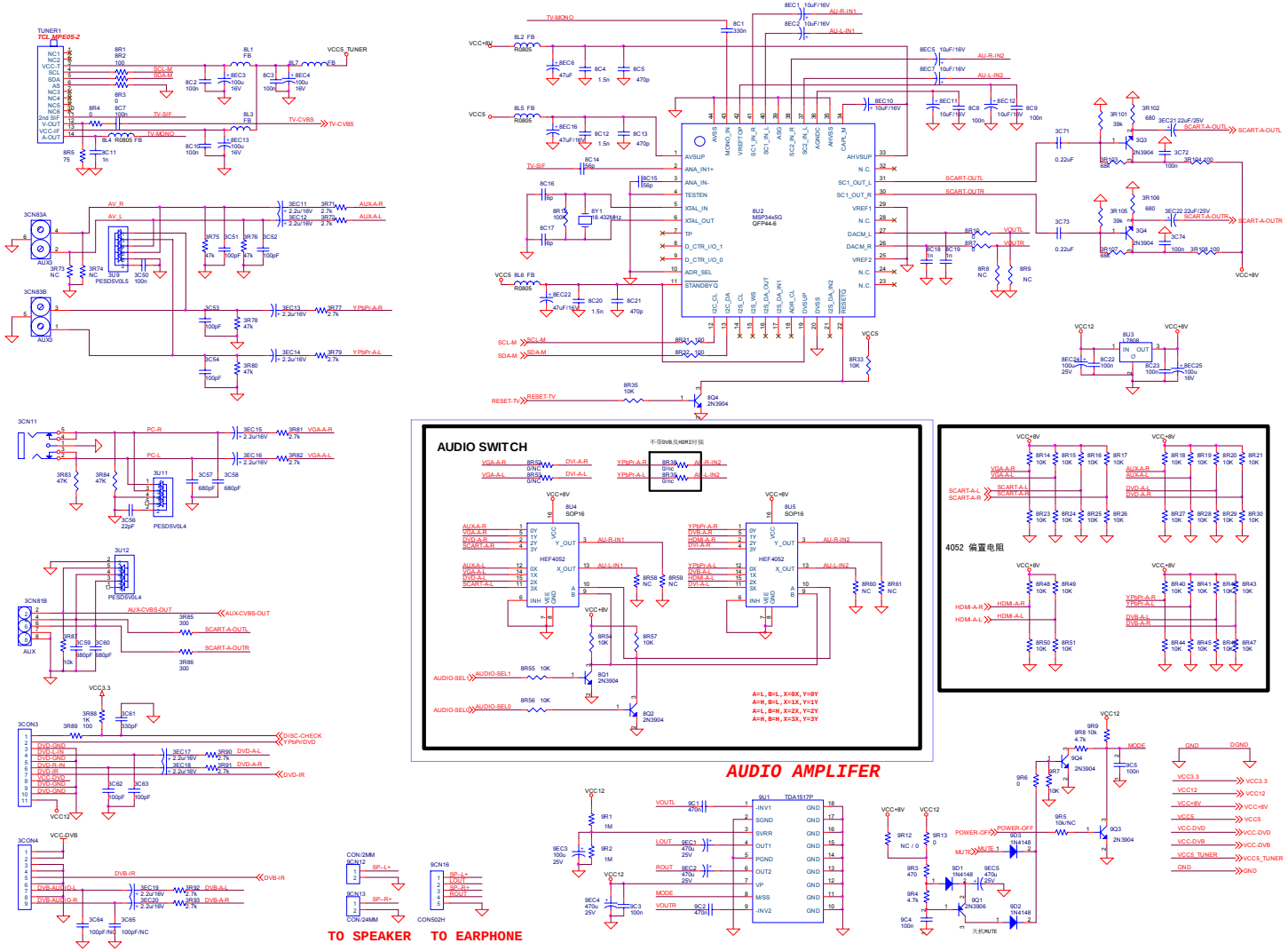
AUDIO SWITCH
AUDIO AMPLIFER
TO SPEAKER
TO EARPHONE
4052 偏置电阻

5. HDMI

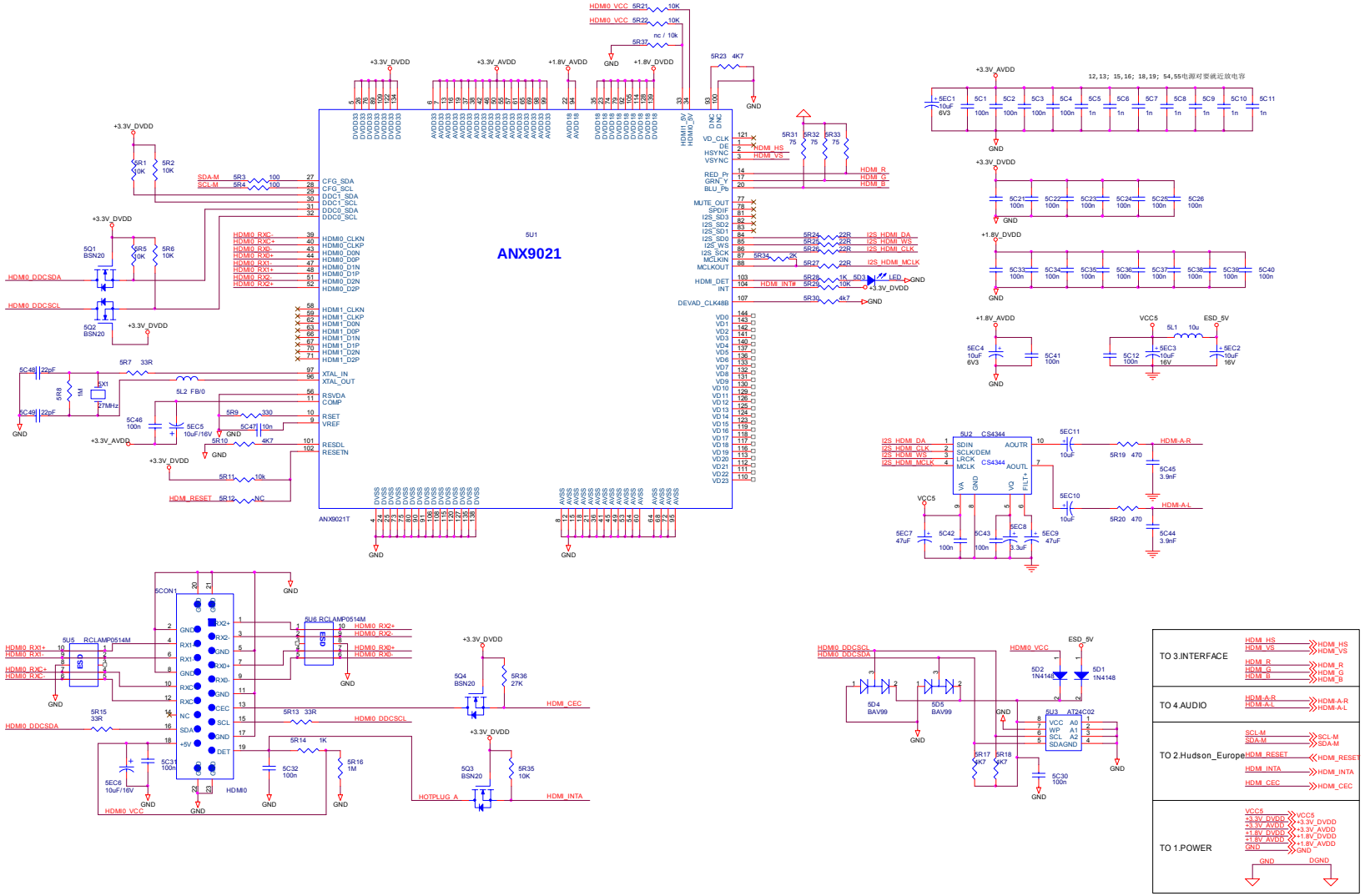
ANX9021
5U1
ANX9021T
HDMI0_VCC 5R21 10K
HDMI0_VCC 5R22 10K
nc / 10k
5R37
+3.3V_DVDD
+3.3V_AVDD
+1.8V_AVDD
+1.8V_DVDD
GND
5R23 4K7
HDMI_HS
HDMI_VS
HDMI_R
HDMI_G
HDMI_B
I2S_HDMI_DA
I2S_HDMI_WS
I2S_HDMI_CLK
I2S_HDMI_MCLK
LED
HDMI_INT#
+3.3V_DVDD
5R30 4k7
DEVAD_CLK48B
SDA-M 5R3 100
SCL-M 5R4 100
CFG_SDA
CFG_SCL
DDC1_SDA
DDC1_SCL
DDC0_SDA
DDC0_SCL
HDMI0_RXC-
HDMI0_RXC+
HDMI0_RX0-
HDMI0_RX0+
HDMI0_RX1-
HDMI0_RX1+
HDMI0_RX2-
HDMI0_RX2+
HDMI0_CLKN
HDMI0_CLKP
HDMI0_D0N
HDMI0_D0P
HDMI0_D1N
HDMI0_D1P
HDMI0_D2N
HDMI0_D2P
HDMI1_CLKN
HDMI1_CLKP
HDMI1_D0N
HDMI1_D0P
HDMI1_D1N
HDMI1_D1P
HDMI1_D2N
HDMI1_D2P
XTAL_IN
XTAL_OUT
RSVDA
COMP
RSET
VREF
RESDL
RESETN
HDMI_RESET 5R12 NC
HDMI0_DDCSDA
HDMI0_DDCSCL
5Q1 BSN20
5Q2 BSN20
5X1 27MHz
5L2 FB/0
5L1 10u
ESD_5V
5U2 CS4344
SDIN
SCLK/DEM
LRCK
MCLK
AOUTR
AOUTL
HDMI-A-R
HDMI-A-L
5U3 AT24C02
SDA
SCL
5U4 RCLAMP0514M
5U5 RCLAMP0514M
5U6 RCLAMP0514M
5CON1
HDMI0
5Q4 BSN20
5Q3 BSN20
HDMI_CEC
HDMI_INTA
HOTPLUG_A
5D1 1N4148
5D2 1N4148
5D4 BAV99
5D5 BAV99
VCC5
TO 3.INTERFACE
TO 4.AUDIO
TO 2.Hudson_Europe
TO 1.POWER
12, 13, 15, 16, 18, 19, 54, 55电源对要就近放电容

DVD BOARD

1. Index

SLOTIN1389HD_TOHEI_HD62_V1

MT1389HD(LQFP256) DVD MP Board for SANYO HD62 PUH (Small Size)

MDxxx

1	INDEX & POWER, RESET
2	MT1389HD
3	SDRAM & FLASH
4	VIDEO OUT & AV-CON
5	AUDIO OUT - WM8766

Rev	History	P#	Date
V1	The original released. (modified from 3-SY1389P3-V1) Supports 1389HD & Memory Card Interface		2005/10/08

NAME	TYPE	DEVICE
VCC	Digital 5V	SUPPLY
DV33	Digital 3.3V	MT1389HD
RFV33	Servo 3.3V	MT1389HD
AV33	Laser Diode 3.3V	
V18	Digital 1.8V	MT1389HD
SD33	Digital 3.3V	SDRAM
+12V	Audio +12V	OP AMP.
-12V	Audio -12V	OP AMP.
AVDD5	Audio 5V	Audio DAC
DVDD3	Audio 3.3V	Audio DAC

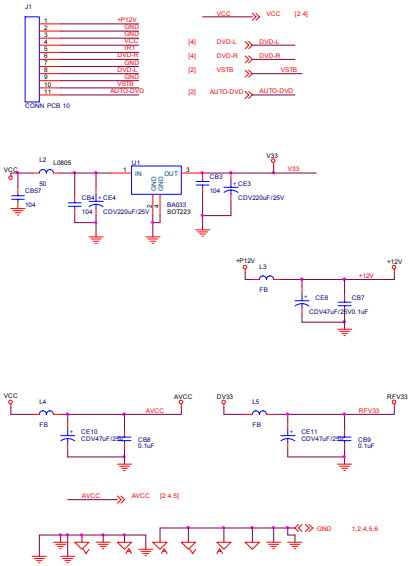

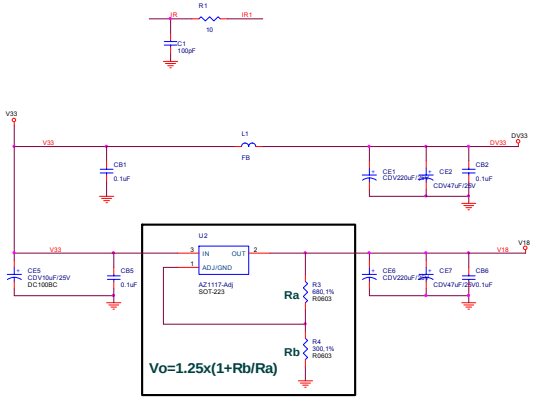

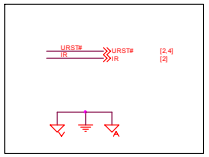

RESET Circuit

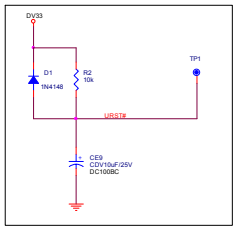

AZ1117	Rb	Ra
Fix regulator	0 ohm	OFF
Adj regulator	300 1%	680 1%

1.25x(1+Rb/Ra)

Note for Fix or Adj Regulator

Ra = 680 FOR 1.8V
Ra = 560 FOR 1.92V

2. MT1389HD TQFP 256

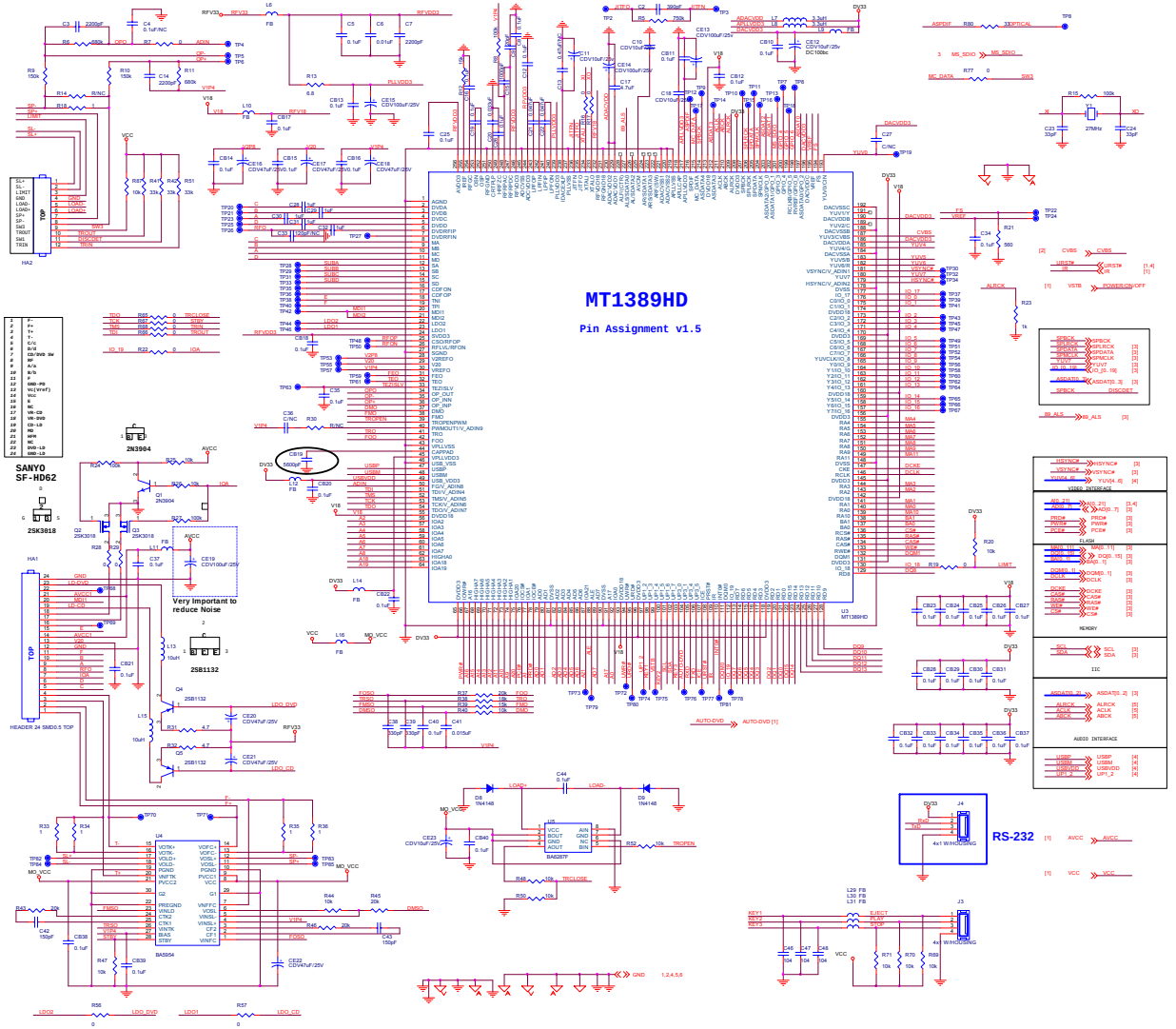

3. SDRAM & FLASH

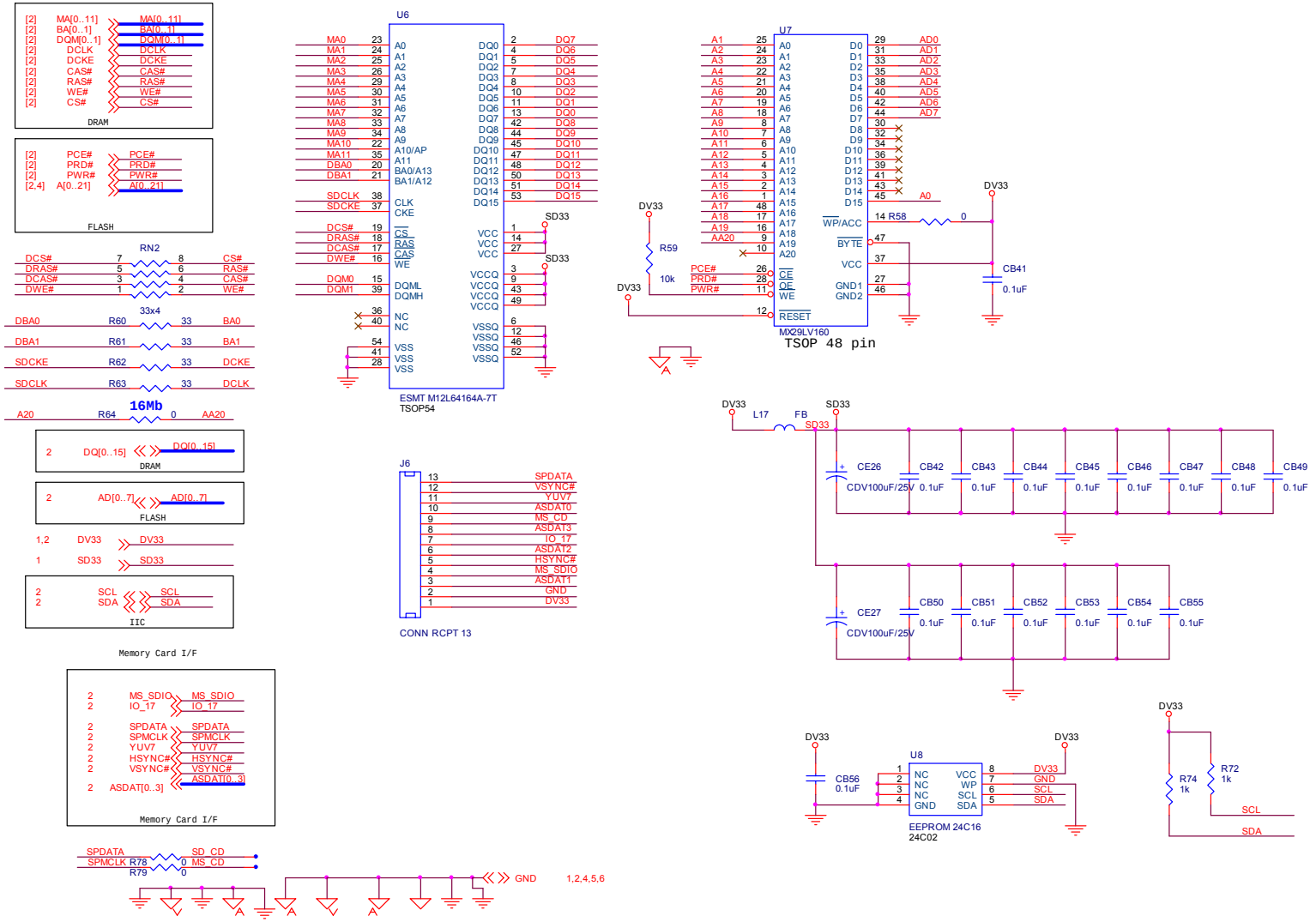

4. VIDEO OUT & AV-CONNECTOR

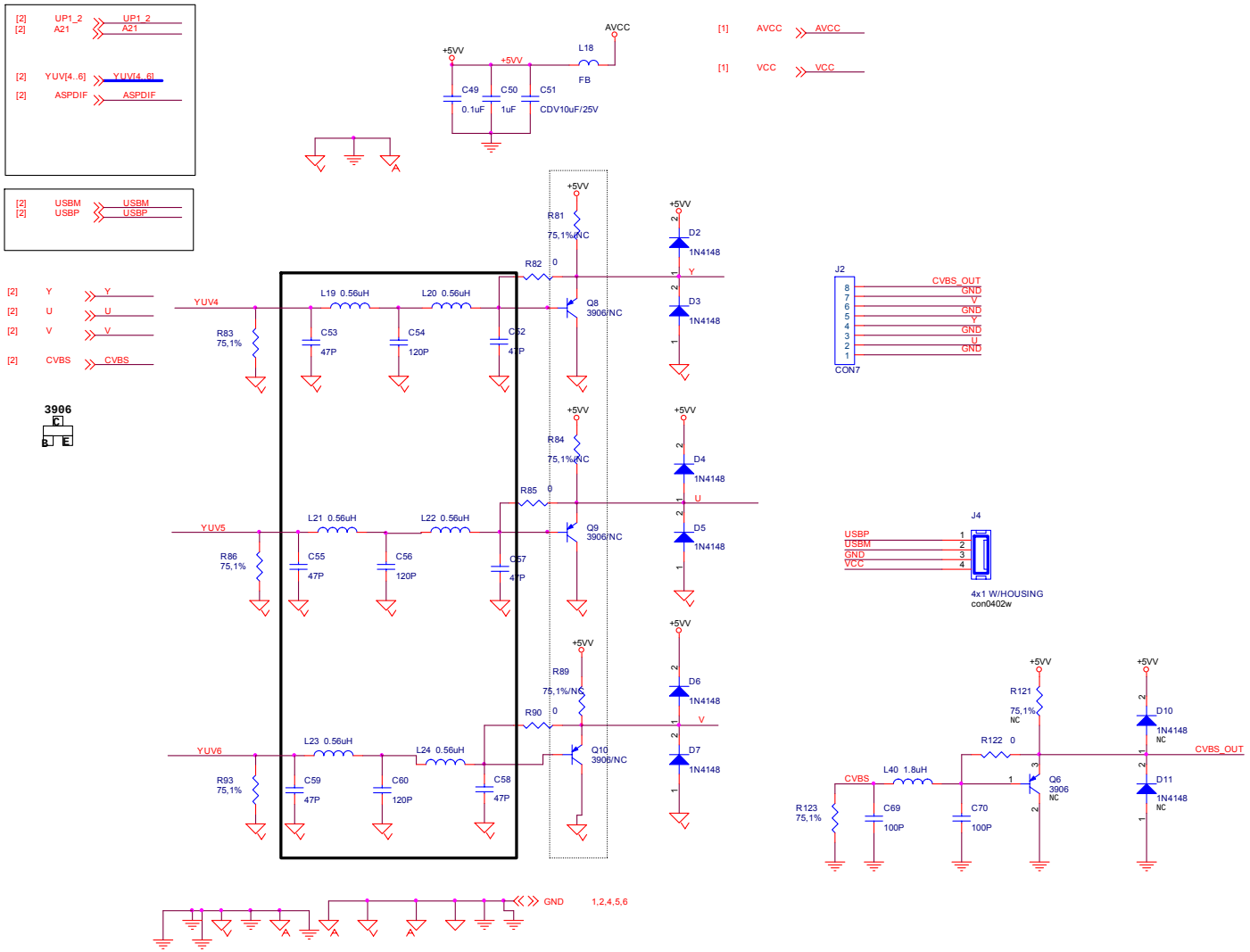

5. AUDIO OUT WM8714

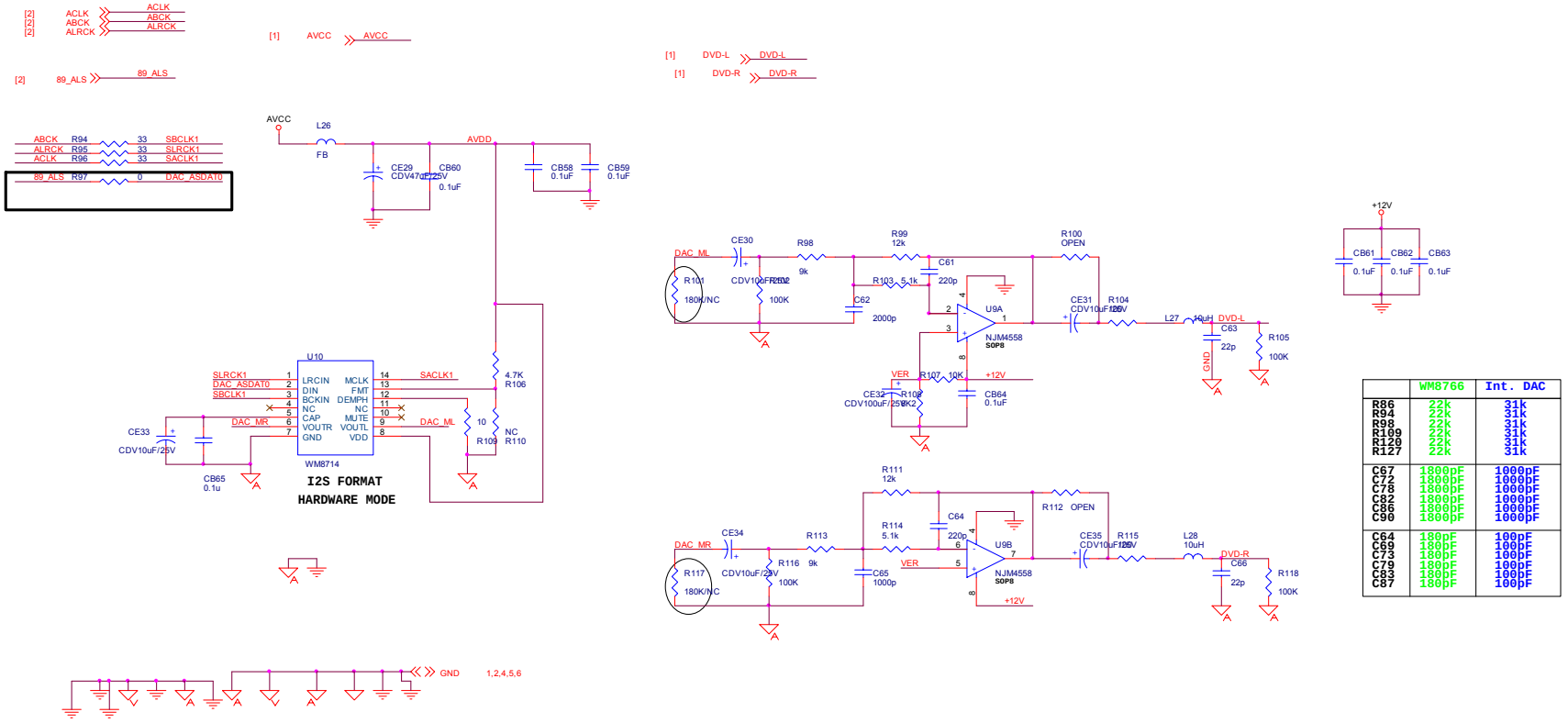

	WM8766	Int. DAC
R86	22k	31k
R94	22k	31k
R98	22k	31k
R109	22k	31k
R120	22k	31k
R127	22k	31k
C67	1800pF	1000pF
C72	1800pF	1000pF
C78	1800pF	1000pF
C82	1800pF	1000pF
C86	1800pF	1000pF
C90	1800pF	1000pF
C64	180pF	100pF
C69	180pF	100pF
C73	180pF	100pF
C79	180pF	100pF
C83	180pF	100pF
C87	180pF	100pF

Hi-voltage board

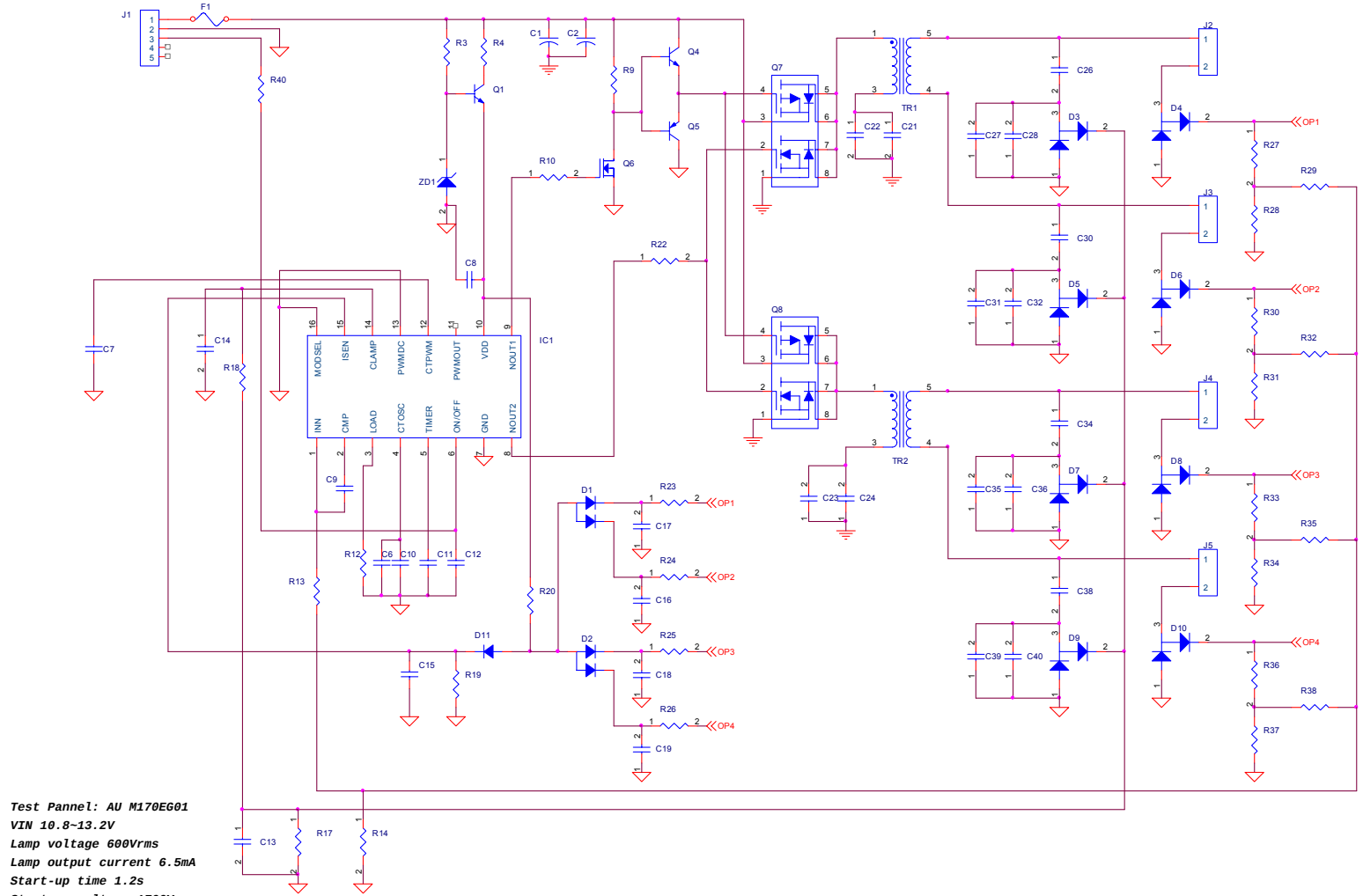

Test Pannel: AU M170EG01
VIN 10.8~13.2V
Lamp voltage 600Vrms
Lamp output current 6.5mA
Start-up time 1.2s
Start-up voltage 1700Vrms
Operation frequency 50KHZ

Part 5 Part list of DSL-19M1WC

Bom No	Part No	Part Name	QTY	
LTD06V-3769C01	02.23.LTD06V3769C01	DVD board	1	
Part No	Name	Specification	QTY	LOCA NO
01.57.R.2.E000J	SMD resistor	0603-0Ω ±5%	16	R16 R17 R19 R22 R56 R57 R58 R64 R82 R85 R90 R97 R78 R79 R77 R122
01.57.R.2.E1R0J	SMD resistor	0603-1Ω±5%	5	R18 (R33) (R34) R35 R36
01.57.R.2.E4R7J	SMD resistor	0603-4.7Ω±5%	4	R31 R32 R28 R29
01.57.R.2.E6R8J	SMD resistor	0603-6.8Ω±5%	1	R13
01.57.R.2.E100J	SMD resistor	0603-10Ω±5%	2	R109 R1
01.57.R.2.E330J	SMD resistor	0603-33Ω±5%	8	R60 R61 R62 R63 (R80) R94 R95 R96
01.57.R.2.E750F	SMD resistor	0603-75Ω±1%	3	R83 R86 R93 R123
01.57.R.2.E101J	SMD resistor	0603-100Ω±5%	2	R104 R115
01.57.R.2.E301F	SMD resistor	0603-300Ω±1%	1	R4
01.57.R.2.E561J	SMD resistor	0603-560Ω±5%	1	R21
01.57.R.2.E681F	SMD resistor	0603-680Ω 1%	1	R3
01.57.R.2.E102J	SMD resistor	0603-1KΩ±5%	3	R23 R72 R74
01.57.R.2.E472J	SMD resistor	0603-4.7KΩ±5%	2	R106 R87
01.57.R.2.E512J	SMD resistor	0603-5.1KΩ±5%	2	R114 R103
01.57.R.2.E822J	SMD resistor	0603-8.2KΩ±5%	1	R108
01.57.R.2.E912J	SMD resistor	0603-9.1KΩ±5%	2	R113 R98
01.57.R.2.E103J	SMD resistor	0603-10KΩ±5%	15	R2 R20 R25 R26 R40 R44 R47 R48 R50 R52 R59 R69 R70 R71 R107
01.57.R.2.E123J	SMD resistor	0603-12KΩ±5%	2	R111 R99
01.57.R.2.E153J	SMD resistor	0603-15KΩ±5%	2	R12 R39
01.57.R.2.E183J	SMD resistor	0603-18KΩ±5%	1	R38
01.57.R.2.E203J	SMD resistor	0603-20KΩ±5%	4	R37 R43 R45 R46
01.57.R.2.E333J	SMD resistor	0603-33KΩ±5%	3	R41 R42 R51
01.57.R.2.E104J	SMD resistor	0603-100KΩ±5%	8	R8 R15 R24 R27 R102 R105 R116 R118
01.57.R.2.E154J	SMD resistor	0603-150KΩ±5%	2	R10 R9
01.57.R.2.E184J	SMD resistor	0603-180KΩ±5%	2	R101 R117
01.57.R.2.E684J	SMD resistor	0603-680KΩ±5%	2	R11 R6
01.57.R.2.E754J	SMD resistor	0603-750KΩ±5%	1	R5
01.57.R.8.EP3304	SMD row resistor	33Ω*4 ±5%	1	RN2
01.54.CS.2.E100N	SMD capacitor	0603-10P NPO±5%/50V	1	C81
01.54.CS.2.E200N	SMD capacitor	0603-20P NPO±5%/50V	1	C9
01.54.CS.2.E220N	SMD capacitor	0603-22P NPO±5%/50V	2	C63 C66
01.54.CS.2.E330N	SMD capacitor	0603-33P NPO±5%/50V	12	C23 C24 C75 C76 C77 C78 C79 C80 C82 C83 C84 C85
01.54.CS.2.E470N	SMD capacitor	0603-47P	6	C52 C53 C55 C57 C58 C59

		NPO±5%/50V		
01.54.CS.2.E101N	SMD capacitor	0603-100P NPO±5%/50V	3	C1 C69 C70
01.54.CS.2.E121N	SMD capacitor	0603-120P NPO±5%/50V	3	C54 C56 C60
01.54.CS.2.E151N	SMD capacitor	0603-150P NPO±5%/50V	2	C43 C42
01.54.CS.2.E221N	SMD capacitor	0603-220P NPO±5%/50V	2	C64 C61
01.54.CS.2.E331X	SMD capacitor	0603-330P X7R±10%/50V	2	C39 C38
01.54.CS.2.E391N	SMD capacitor	0603-390P NPO±5%/50V	1	C2
01.54.CS.2.E102X	SMD capacitor	0603-102 X7R±10%/50V	6	C15 C65 C46 C47 C48 C68
01.54.CS.2.E202X	SMD capacitor	0603-202 X7R±10%/50V	1	C62
01.54.CS.2.E222X	SMD capacitor	0603-222 X7R±10%/50V	3	C3 C7 C14
01.54.CS.2.E562X	SMD capacitor	0603-562 X7R±10%/50V	1	CB19
01.54.CS.2.E103Y	SMD capacitor	0603-103 Y5V-20+80%/50 V	1	C6
01.54.CS.2.E153Y	SMD capacitor	0603-153 Y5V-20+80%/50 V	1	C41
01.54.CS.2.E333X	SMD capacitor	0603-333 X7R±10%/50V	1	C20
01.54.CS.2.E104Y	SMD capacitor	0603-104 Y5V-20+80%/50 V	66	CB1 CB2 CB7 CB8 C8 CB9 CB10 CB11 CB12 C12 CB13 CB14 CB15 CB16 C16 CB17 CB18 C19 CB20 CB21 CB22 CB23 CB24 CB25 C25 CB26 C26 CB27 CB28 CB29 CB30 CB31 CB32 CB33 CB34 C34 CB35 C35 CB36 CB37 C37 CB38 CB39 CB40 C40 CB41 CB43 C44 CB45 CB46 CB48 CB49 C49 C5 CB51 CB55 CB56 CB58 CB59 CB60 CB3 CB4 CB57 CB65 CB42 C45
01.54.CS.2.E104X	SMD capacitor	0603-104 X7R±10%/50V	4	C71 C72 C73 C74
01.54.CS.2.E105Y16V	SMD capacitor	0603-105 Y5V-20+80%/16 V	6	C28 C29 C30 C31 C32 (C50)
01.54.CS.2.E473Y	SMD capacitor	0603-473 Y5V-20+80%/50 V	2	C21 C22
01.54.CS.2.E474Y	SMD capacitor	0603-474 Y5V+80-20%/50 V	1	(C17)

01.34.CL.D.E10U16VA	Electrolyse capacitor	CDV-10UF/16V 4*5	8	CE9 C10 C18 C51 C11 CE12 CE23 CE33
01.34.CL.D.E10U25VA	Electrolyse capacitor	CDV-10UF/25V 4*5	4	CE30 CE31 CE34 CE35
01.34.CL.D.E47U10VA	Electrolyse capacitor	CDV-47UF/10V 4*5	5	CE16 CE17 CE18 CE21 CE20
01.34.CL.D.EV47U16VA	Electrolyse capacitor	CDV-47UF/16V 5*5	1	CE11
01.34.CL.D.E47U25VA	Electrolyse capacitor	CDV-47UF/25V 6*5	5	CE22 CE10 CE29 CE2 CE8
01.34.CL.D.E100U10VA	Electrolyse capacitor	CDV-100UF/10V 5*5	4	CE13 CE14 CE15 CE19
01.34.CL.D.E100U16VA	Electrolyse capacitor	CDV-100UF/16V 6*5	1	CE32
01.34.CL.D.E100U25VA	Electrolyse capacitor	CDV-100UF/25V 8*5	1	CE26
01.34.CL.D.E220U6V3A	Electrolyse capacitor	CDV-220UF/6.3V 6*5	3	CE6 CE3 CE1
01.34.CL.D.EV220U16VA1	Electrolyse capacitor	CDV-220UF/16V 8*5	1	CE4
01.13.L.L.S.E002	SMD inductor	0603-10UH	1	L43
01.13.L.L.S.E120	SMD inductor	0805-0.22UH	6	L19 L20 L21 L22 L23 L24
01.13.L.L.S.E011	SMD inductor	0805-3.3UH	2	L8 L7
01.13.L.L.S.E006	SMD inductor	0805-1.8UH	1	L40
01.13.L.L.S.E007	SMD inductor	0805-10UH	4	L13 L15 L27 L28
01.13.L.Z.ESA50	SMD magnetism bead	0603-50Ω	3	L29 L30 L31
01.13.L.Z.ESB50P	SMD magnetism bead	0805-50Ω PB	16	L1 L2 L3 L4 L5 L6 L9 L10 L11 L12 L14 L16 L17 L18 L26 L25
01.13.L.Z.ESA80	SMD magnetism bead	0603-80Ω at 100HZ	7	R65 R66 R67 R68 R7 L41 L42
01.41.D.PS.ELL4148	Diode	LL4148 SMD	9	D1 D2 D3 D4 D5 D6 D7 D10 D11
01.42.Q.S.E2N3904	Audion	2N3904 SMD	1	Q1
01.42.Q.S.E3018	Transistor	2SK3018T106 SMD	2	Q2 Q3
01.42.Q.S.E1132	Audion	2SB1132 SMD	2	Q5 Q4
01.00.JZ.E27000	DIP oscillator	27.000MHZ-49S-20P	1	Y1
01.44.IC.S.EBA033	IC	BA033 SMD	1	U1
01.44.IC.S.E1117	IC	AZ1117H-ADJ SMD	1	U2
01.46.IC.EMT1389DEH	IC	MT1389DE/H SMD	1	U3
01.44.IC.S.EBA5954FP	IC	BA5954FP SMD	1	U4
01.44.IC.S.E6287	IC	BA6287 SMD	1	U5
01.46.IC.E641620	IC	HY57V641620HGT SMD	1	U6
01.46.IC.E29LV160BBTC	IC	MX29LV160BBTC-70 SMD	1	U7
01.46.IC.E24C16	IC	24C16 SMD	1	U8
01.44.IC.S.E4558	IC	NJM4558 SMD	1	U9
01.44.IC.S.E8714	IC	WM8714ED SMD	1	U10

01.40.CON.S05.E007	SMD jack	FPC-0.5-24P	1	HA1
01.40.CON.S10.FPC1.E015	SMD jack	FPC-1.0-12P	1	HA2
01.40.CON.DPH.E020	Jack	PH-4A	1	J4
01.40.CON.DPH.E035	Jack	PH-8A	1	J2
01.40.CON.DPH.E005	Jack	PH-11A	1	J1
01.40.CON.S13.AY1.005	Jack	1.25-5A(Horizontal)DIP	1	J5
01.40.CON.S13.AY1.007	Jack	1.25-13A(Horizontal)DIP	1	J6
01.40.CON.S13.AY1.006	Jack	1.25-4A(Horizontal)DIP	1	J3
01.37.PCB.2.E3769C	Circuit board	DVD board3769C	1	
Bom No	Part No	Part Name	QTY	
LTD06M-3768C01	02.11.LTD06M3768C01	Main board	1	
Part No	Name	Specification	QTY	LOCA NO
01.57.R.2.E000J	SMD resistor	0603-0Ω ±5%	24	2R33 2R35 2R36 2R49 3R33 8R3 8R4 8R7 8R10 9R6 2R43 2R44 2R45 9R13 3R54 3R55 3R56 3R57 2L8 3R41 3C11 3C12 3C13 3C17
01.57.R.3.E000J	SMD resistor	0805-0Ω ±5%	5	3L1 3L2 3L3 3L4 3L5
01.57.R.2.E200F	SMD resistor	0603-20Ω 1%	15	2R1 2R2 2R3 2R4 2R6 2R7 2R8 2R9 2R11 2R12 2R13 2R14 2R16 2R17 2R18
01.57.R.2.E470J	SMD resistor	0603-47Ω±5%	1	(2R26)
01.57.R.2.E57R6F	SMD resistor	0603-57.6Ω±1%	4	2R5 2R10 2R15 2R19
01.57.R.2.E750F	SMD resistor	0603-75Ω±1%	21	3R7 3R8 3R9 8R5 2R28 2R29 3R10 3R11 3R12 3R13 3R14 3R21 3R22 3R23 3R51 3R52 3R53 3R67 3R68 3R69 3R70
01.57.R.2.E101J	SMD resistor	0603-100Ω±5%	14	8R1 8R2 1R15 1R18 2R60 3R30 3R31 3R89 8R31 8R32 3R104 3R108 3R26 3R27
01.57.R.2.E221J	SMD resistor	0603-220Ω±5%	1	2R23
01.57.R.2.E301J	SMD resistor	0603-300Ω±5%	5	3R1 3R2 2R25 3R85 3R86
01.57.R.2.E471J	SMD resistor	0603-470Ω±5%	3	9R3 2R24 2R27
01.57.R.2.E511J	SMD resistor	0603-510Ω±5%	2	2R56 2R50
01.57.R.2.E681J	SMD resistor	0603-680Ω±5%	2	3R106 3R102
01.57.R.2.E102J	SMD resistor	0603-1KΩ±5%	8	1R6 1R16 2R22 2R53 2R54 2R55 2R57 3R88
01.57.R.2.E122F	SMD resistor	0603-1.2K±1%	2	1R5 1R13
01.57.R.2.E182F	SMD resistor	0603-1.8KΩ±1%	1	1R12
01.57.R.2.E202F	SMD resistor	0603-2KΩ±1%	1	1R9
01.57.R.2.E222J	SMD resistor	0603-2.2KΩ±5%	4	1R7 1R8 3R24 3R25
01.57.R.2.E272J	SMD resistor	0603-2.7KΩ±5%	16	3R5 3R6 2R31 2R32 2R37 2R38 2R39 2R40 3R71 3R72 3R77 3R79 3R81 3R82 3R90 3R91
01.57.R.2.E302F	SMD resistor	0603-3KΩ±1%	1	1R4
01.57.R.2.E332J	SMD resistor	0603-3.3KΩ±5%	1	1R1
01.57.R.2.E472J	SMD resistor	0603-4.7KΩ±5%	6	9R4 9R8 1R17 2R61 2R62 2R63
01.57.R.2.E682J	SMD resistor	0603-6.8KΩ±5%	3	(2R21) 2R41 2R42

01.57.R.2.E103J	SMD resistor	0603-10KΩ±5%	48	1R3 9R7 9R9 1R11 1R14 2R30 2R47 2R48 2R52 3R28 3R29 3R87 8R14 8R15 8R16 8R17 8R18 8R19 8R20 8R21 8R23 8R24 8R25 8R26 8R27 8R28 8R29 8R30 8R33 8R35 8R40 8R41 8R42 8R43 8R44 8R45 8R46 8R47 8R48 8R49 8R50 8R51 8R54 8R55 8R56 8R57 9R5 2R65
01.57.R.2.E273J	SMD resistor	0603-27KΩ±5%	1	(2R20)
01.57.R.2.E333J	SMD resistor	0603-33KΩ±5%	1	2R51
01.57.R.2.E393J	SMD resistor	0603-39KΩ±5%	2	3R105 3R101
01.57.R.2.E473J	SMD resistor	0603-47KΩ±5%	8	3R3 3R4 3R75 3R76 3R78 3R80 3R83 3R84
01.57.R.2.E683J	SMD resistor	0603-68KΩ±5%	2	3R107 3R103
01.57.R.2.E104J	SMD resistor	0603-100KΩ±5 %	3	1R2 1R10 (8R12)
01.57.R.2.E105J	SMD resistor	0603-1MΩ±5%	2	9R1 (9R2)
01.57.R.8.EP1034	SMD row resistor	10KΩ*4 ±5%	2	2RP7 2RP6
01.54.CS.2.E5P0N	SMD capacitor	0603-5P NPO±0.25PF/50 V	2	3C25 3C24
01.54.CS.2.E6P0N	SMD capacitor	0603-6P NPO±0.25%/50 V	2	(8C16) (8C17)
01.54.CS.2.E220N	SMD capacitor	0603-22P NPO±5%/50V	7	2C69 3C21 3C22 3C23 3C26 3C27 3C56
01.54.CS.2.E330N	SMD capacitor	0603-33P NPO±5%/50V	2	2C64 2C63
01.54.CS.2.E470N	SMD capacitor	0603-47P NPO±5%/50V	1	(3C35)
01.54.CS.2.E560N	SMD capacitor	0603-56P NPO±5%/50V	2	(8C15) 8C14
01.54.CS.2.E101N	SMD capacitor	0603-100P NPO±5%/50V	10	3C14 3C15 3C36 3C37 3C51 3C52 3C53 3C54 3C62 3C63
01.54.CS.2.E104Y	SMD capacitor	0603-104 Y5V-20+80%/50 V	93	1C1 1C2 1C3 1C5 1C6 1C8 1C9 8C2 8C3 8C7 8C8 8C9 9C3 9C4 9C5 1C10 1C11 1C12 1C13 1C14 1C15 1C16 1C17 2C20 2C21 2C22 2C24 2C26 2C28 2C30 2C31 2C32 2C33 2C34 2C36 2C37 2C38 2C39 2C40 2C41 2C42 2C43 2C44 2C45 2C46 2C47 2C48 2C49 2C50 2C51 2C52 2C53 2C54 2C55 2C56 2C57 2C58 2C59 2C60 2C61 2C66 2C67 2C68 2C70 2C71 2C72 2C73 2C74 3C16 3C28 3C29 3C38 3C50 3C72 3C74 8C10 8C22 8C23 3C31 3C42 5C12 1C18 1C19 1C20 1C21 1C22 1C23 1C24 1C25 1C26 1C27 1C28 2C75
01.54.CS.2.E104X	SMD capacitor	0603-104 X7R±10%/50V	22	2C1 2C2 2C3 2C4 2C5 2C6 2C7 2C8 2C9 2C10 2C11 2C12 2C13

				2C14 2C15 2C16 2C17 2C18 2C19 3C39 3C40 3C41
01.54.CS.2.E331X	SMD capacitor	0603-330P X7R±10%/50V	11	3C1 3C2 3C3 3C4 3C5 3C6 3C7 3C8 3C9 3C10 3C61
01.54.CS.2.E471X	SMD capacitor	0603-470P X7R±10%/50V	3	(8C5) (8C13) (8C21)
01.54.CS.2.E681X	SMD capacitor	0603-680P X7R±10%/50V	4	3C57 3C58 (3C59) (3C60)
01.54.CS.2.E102X	SMD capacitor	0603-102 X7R±10%/50V	3	8C11 8C18 8C19
01.54.CS.2.E152X	SMD capacitor	0603-152 X7R±10%/50V	3	(8C4) (8C12) (8C20)
01.54.CS.2.E103X	SMD capacitor	0603-103 X7R±10%/50V	7	1C4 1C7 2C23 2C25 2C27 2C29 2C35
01.54.CS.2.E224Y	SMD capacitor	0603-224 Y5V-20+80%/16 V	2	3C73 3C71
01.54.CS.2.E334Y	SMD capacitor	0603-334 Y5V-20+80%/25 V	1	8C1
01.54.CS.2.E474Y	SMD capacitor	0603-474 Y5V+80-20%/50 V	2	9C2 9C1
01.34.CL.D.E2U216VC	Electrolyse capacitor	CD110-2.2UF/16V 5*11	10	3EC11 3EC12 3EC13 3EC14 3EC15 3EC16 3EC17 3EC18 3EC3 3EC2
01.34.CL.D.E22U16VC	Electrolyse capacitor	CD110-22UF/16V 5*11	1	2EC14
01.34.CL.D.E22U25V0C	Electrolyse capacitor	CD110-22UF/25V 5*11	2	3EC22 3EC21
01.34.CL.D.E10U16VC	Electrolyse capacitor	CD110-10UF/16V 5*11	11	3EC1 3EC4 3EC5 8EC1 8EC2 8EC5 8EC7 8EC10 8EC11 8EC12 5EC3
01.34.CL.D.E47U16VC	Electrolyse capacitor	CD110-47UF/16V 5*11	8	8EC6 2EC1 2EC2 2EC3 2EC4 2EC5 8EC16 8EC22
01.34.CL.D.E100U16VC	Electrolyse capacitor	CD110-100UF/16V 5*11	18	1EC5 1EC6 8EC3 8EC4 1EC11 1EC12 8EC13 8EC25 2EC6 2EC7 2EC8 2EC9 3EC9 2EC10 2EC11 2EC12 2EC16 2EC17
01.34.CL.D.E100U25VD	Electrolyse capacitor	CD110-100UF/25V 6.3*12	4	9EC3 1EC10 1EC13 8EC24
01.34.CL.D.E220U16VD	Electrolyse capacitor	CD110-220UF/16V 6.3*12	3	2EC18 1EC4 1EC7
01.34.CL.D.E220U25VD	Electrolyse capacitor	CD110-220UF/25V 8*12	3	1EC1 1EC3 1EC9
01.34.CL.D.E470U16VD	Electrolyse capacitor	CD110-470UF/16V 8*12	2	3EC10 2EC15
01.34.CL.D.E470U25VE	Electrolyse capacitor	CD110-470UF/25V 8*14	6	1EC2 1EC8 9EC1 9EC2 9EC4 9EC5
01.13.L.Z.ESA50P	SMD magnetism bead	0603-50Ω PB	14	2FB15 3FB13 2FB1 2FB2 2FB3 2FB4 2FB5 2FB6 2FB7 2FB8 2FB9 2FB10 2FB11 2FB12

01.13.L.Z.ESA100	SMD magnetism bead	0603-100Ω	7	3FB3 3FB4 3FB5 3FB6 3FB7 3FB8 3FB9
01.13.L.Z.ESB50P	SMD magnetism bead	0805-50Ω PB	17	2FB13 1FB1 3FB1 3FB2 8L2 8L4 8L5 8L6 8L7 3FB10 1L3 1L7 1L8 1L9 3L6 3L7 3L8
01.13.L.L.S.E002	SMD inductor	0603-10UH	7	2L1 2L2 2L3 2L4 2L5 2L6 2L7
01.13.L.L.S.E006	SMD inductor	0805-1.8UH	1	3L9
01.13.L.Z.ED50A	DIP magnetism bead	50Ω （3.5*6.0*0.8）	4	8L3 8L1 1L5 1L6
01.13.L.L.S.E242	SMD inductor	ACM2012-900-2P	10	LP1 LP2 LP3 LP4 LP5 LP6 LP7 LP8 LP9 LP10
01.13.L.L.S.E085	SND jar install inductor	SLF12575T-470M2R7	1	1L1
01.13.L.L.D.E150	DIP inductor	LH0608-33UH	1	1L2
01.13.L.L.D.E056	DIP inductor	LCL-11201HA	1	1T1
01.41.D.WS.E5V1	SMD zener diode	5.1V	1	1D3
01.41.D.PS.ESS24	Diode	SS24 SMD	2	1D1 1D2
01.41.D.PS.ELL4148	Diode	LL4148 SMD	5	9D1 9D2 9D3 3D10 3D11
01.41.D.PS.EBAV99	Diode	BAV99LT1 SMD	12	3D1 3D2 3D3 3D4 3D5 3D6 3D7 3D12 3D13 3D14 3D15 3D16
01.42.Q.S.E2N3904	Audion	2N3904 SMD	10	1Q1 1Q2 2Q6 3Q3 3Q4 8Q1 8Q2 8Q4 9Q3 9Q4
01.42.Q.S.E2N3906	Audion	2N3906 SMD	3	2Q5 2Q7 9Q1
01.00.JZ.E196608A	DIP oscillator	19.6608MHZ-49S-20P	1	2Y1
01.00.JZ.E18432A	DIP oscillator	18.432MHZ-49S-12P	1	8Y1
01.44.IC.D.EL7808	IC	L7808C-V DIP	1	8U3
01.44.IC.S.EAP1510	IC	AP1510 SMD	1	1U1
01.44.IC.S.E1513S	IC	AP1513S SMD	1	1U2
01.44.IC.S.E4052	IC	CD4052 SMD	1	8U4
01.44.IC.S.E3415	IC	MSP3415G SMD	1	8U2
01.44.IC.D.ETDA1517P	IC	TDA1517P DIP	1	9U1
01.44.IC.S.E24C32	IC	AT24C32AN SMD	1	2U2
01.44.IC.S.EV330	IC	FSAV330 SMD	1	3U4
01.44.IC.S.E8125	IC	FLI8125-LF SMD	1	2U3
01.46.IC.E24C02	IC	24C02 SMD	1	3U3
01.46.IC.E74L125	IC	74LVC125 SMD	1	2U4
01.44.IC.S.ELM1117DTX18V	IC	LM1117DTX-1.8V SMD	1	1U3
01.46.IC.EAT49BV	IC	AT49BV040B SMD	1	2U1
01.44.IC.S.ES9435	IC	FDS9435 SMD	1	1U4
01.44.IC.S.EPESD5VOL4U	IC	PESD5VOL4U SMD	5	3U5 3U6 3U7 3U11 3U12
01.44.IC.S.EPESD5V0L5	IC	PESD5V0L5 SMD	1	3U9
01.40.CON.DCZ.E331	SCART jack	CS112 DIP	1	3J1

01.40.CON.DCZ.E007	VGA jack	EV-015FC/15 pin DIP	1	3CN10
01.40.CON.DCZ.E001	Jack	DASW-8 DIP	1	3CN80
01.40.CON.DCZ.E323	Same core jack	AV6-13/PB-27	1	3CN81
01.40.CON.DCZ.E170	Same core jack	AV4-8.4-13/PB-27	1	3CN83
01.40.CON.DCZ.E102	Perch earphone jack	CKX-3.5-02(with out switch) DIP	1	3CN11
01.40.CON.DCZ.E018	Power jack	DDK2.5 DIP	1	1JP1
01.40.CON.DTJ.E004	Jack	TJC3-2A	2	9CN12 9CN13
01.40.CON.DPH.E005	Jack	PH-11A	1	3CON3
01.40.CON.DPH.E024	Jack	PH-5A	2	1CON1 9CN16
01.40.CON.DPH.E035	Jack	PH-8A	1	3CON2
01.40.CON.DPH.E020	Jack	PH-4A	1	2CN3
01.40.CON.S13.AY1.001	Jack	1.25-5A(vertical)DIP	1	2CN2
01.40.CON.S13.AY1.002	Jack	1.25-6A(vertical)DIP	1	2CN1
01.40.CON.S13.AY.E004	SMD jack	1.25-30A(lie paste)	1	2JP1
01.31.GPT.E063	Tuner	MPE05-1-E DIP	1	TUNER1
01.37.PCB.2.E3768C	Circuit board	Main board3768C	1	
02.11.LTD06M3768C01A	Configure table	LTD06M-3768C 01 without HDMI configure	1	
02.11.LTD06M3768C01B	Configure table	LTD06M-3768C 01 with HDMI configure	1	
Bom No	Part No	Part Name	QTY	
LTD06M-3768C01-without HDMI	02.11.LTD06M3768C 01A	Configure table	1	
Part No	Name	Specification	QTY	LOCA NO
01.57.R.2.E000J	SMD resistor	0603-0Ω ±5%	7	3R37 3R38 3R58 3R59 3R60 8R38 8R39
Bom No	Part No	Part Name	QTY	
LTD06M-3768C01- with HDMI	02.11.LTD06M3768C 01B	Configure table	1	
Part No	Name	Specification	QTY	LOCA NO
01.57.R.2.E000J	SMD resistor	0603-0Ω ±5%	1	5L2
01.57.R.2.E220J	SMD resistor	0603-22Ω±5%	4	5R24 5R25 5R26 5R27
01.57.R.2.E330J	SMD resistor	0603-33Ω±5%	3	5R7 5R13 5R15
01.57.R.2.E750F	SMD resistor	0603-75Ω±1%	3	(5R31) (5R32) (5R33)
01.57.R.2.E101J	SMD resistor	0603-100Ω±5%	6	5R4 5R3 3R15 3R16 3R17 3R18
01.57.R.2.E331J	SMD resistor	0603-330Ω±5%	1	(5R9)
01.57.R.2.E471J	SMD resistor	0603-470Ω±5%	2	5R19 5R20
01.57.R.2.E102J	SMD resistor	0603-1KΩ±5%	2	5R14 5R28
01.57.R.2.E202J	SMD resistor	0603-2KΩ±5%	1	5R34
01.57.R.2.E472J	SMD resistor	0603-4.7KΩ±5%	5	5R10 5R17 5R18 5R23 5R30
01.57.R.2.E103J	SMD resistor	0603-10KΩ±5%	11	5R1 5R2 5R5 5R6 5R11 5R21 5R37 5R29 5R35 3R19 3R20
01.57.R.2.E273J	SMD resistor	0603-27KΩ±5%	1	(5R36)

01.57.R.2.E105J	SMD resistor	0603-1MΩ±5%	2	(5R16) (5R8)
01.54.CS.2.E220N	SMD capacitor	0603-22P NPO±5%/50V	2	(5C49) (5C48)
01.54.CS.2.E102X	SMD capacitor	0603-102 X7R±10%/50V	7	5C5 5C6 5C7 5C8 5C9 5C10 5C11
01.54.CS.2.E392X	SMD capacitor	0603-392 X7R±10%/50V	2	5C44 5C45
01.54.CS.2.E103X	SMD capacitor	0603-103 X7R±10%/50V	1	(5C47)
01.54.CS.2.E104X	SMD capacitor	0603-104 X7R±10%/50V	28	5C1 5C2 5C3 5C4 5C21 5C22 5C23 5C24 5C25 5C26 5C30 5C31 5C32 5C33 5C34 5C35 5C36 5C37 5C38 5C39 5C40 5C41 5C42 5C43 5C46 3C31 5C12 3C30
01.34.CL.D.E3U350VC	Electrolyse capacitor	CD110-3.3UF/50V 5*11	1	5EC8
01.34.CL.D.E10U16VC	Electrolyse capacitor	CD110-10UF/16V 5*11	8	5EC1 5EC4 5EC2 5EC3 5EC10 5EC11 5EC6 5EC5
01.34.CL.D.E47U16VC	Electrolyse capacitor	CD110-47UF/16V 5*11	2	5EC9 5EC7
01.34.CL.D.E100U16VC	Electrolyse capacitor	CD110-100UF/16V 5*11	2	3EC6 3EC7
01.13.L.L.S.E007	SMD inductor	0805-10UH	1	(5L1)
01.13.L.Z.ESA50P	SMD magnetism bead	0603-50Ω PB	2	3FB12 3FB11
01.13.L.Z.ESB50P	SMD magnetism bead	0805-50Ω PB	4	1L10 1L11 1L12 1L13
01.41.D.PS.ELL4148	Diode	LL4148 SMD	2	5D1 5D2
01.41.D.PS.EBAV99	Diode	BAV99LT1 SMD	2	5D5 5D4
01.42.Q.S.E2N3904	Audion	2N3904 SMD	1	3Q2
01.41.D.FS.E008	SMD radiation diode	603	1	5D3
01.40.CON.DCZ.E276	Jack	1775245-2 SMD	1	5CON1
01.44.MOS.S.EBSN20	Transistor	BSN20 SMD	4	5Q1 5Q2 5Q3 5Q4
01.46.IC.EANX9021T	IC	ANX9021T SMD	1	5U1
01.44.IC.S.E4344	IC	CS4344 SMD	1	5U2
01.46.IC.E24C02	IC	24C02 SMD	1	5U3
01.44.IC.S.E0514	IC	RClamp0514M SMD	2	5U5 5U6
01.44.IC.S.EV330	IC	FSAV330 SMD	1	3U1
01.44.IC.S.E74LVS125	IC	74LVS125 SMD	1	3U2
01.44.IC.S.E4052	IC	CD4052 SMD	1	8U5
01.00.JZ.E27000	DIP oscillator	27.000MHZ-49S-20P	1	5X1
Bom No	Part No	Part Name	QTY	
LTD06I-3773C01	02.14.LTD06I3773C01	SD card board	1	
Part No	Name	Specification	QTY	LOCA NO
01.57.R.2.E000J	SMD resistor	0603-0Ω ±5%	1	R5
01.57.R.2.E103J	SMD resistor	0603-10KΩ±5%	8	R2 R3 R4 R6 R7 R8 R10 R11
01.54.CS.2.E104Y	SMD capacitor	0603-104 Y5V-20+80%/50V	4	C1 C9 C10 C11

01.13.L.Z.ESB50	SMD magnetism bead	0805-50Ω	1	FB1
01.34.CL.D.E100U16VC	Electrolyse capacitor	CD110-100UF/16V 5*11	1	C2
01.40.CON.S13.AY1.003	Jack	1.25-13A(vertical) DIP	1	J2
01.40.CON.DCZ.E351	SD card seat	144-1300000901 SMD	1	J6
01.37.PCB.2.E3773C	Circuit board	SD card board 3773C	1	
Bom No	Part No	Part Name	QTY	
LTD06I-3772C01	02.14.LTD06I3772C01	Earphone USB board	1	
Part No	Name	Specification	QTY	LOCA NO
01.57.R.2.E330J	SMD resistor	0603-33Ω±5%	2	R19 R20
01.57.R.3.E301J	SMD resistor	0805-300Ω±5%	2	1R95 1R99
01.57.R.2.E153J	SMD resistor	0603-15KΩ±5%	2	R21 R22
01.54.CS.2.E200N	SMD capacitor	0603-20P NPO±5%/50V	2	CB2 CB3
01.54.CS.2.E104Y	SMD capacitor	0603-104 Y5V-20+80%/50V	1	CB1
01.34.CL.D.E47U16VC	Electrolyse capacitor	CD110-47UF/16V 5*11	3	CE1 1EC22 1EC23
01.13.L.Z.ESB50	SMD magnetism bead	0805-50Ω	1	L1
01.13.L.L.S.E188	SMD inductor	0805-47UH	2	1L16 1L17
01.38.FUSE.D.EGP60	Fuse	GP60-075 DIP	1	F1
01.40.CON.S13.AY1.001	Jack	1.25-5A(vertical)DIP	1	J1
01.40.CON.DPH.E024	Jack	PH-5A	1	CN16
01.40.CON.DCZ.E117	USB Jack	USB-2	1	P1
01.40.CON.DCZ.E066	Horizontal double row(earphone)Jack	CKX-3.5-02K(with switch) DIP	1	1CN11
01.37.PCB.2.E3772C	Circuit board	earphone USB board3772C	1	
Bom No	Part No	Part Name	QTY	
LTD06K-3770C01	02.15.LTD06K3770C01	Key board	1	
Part No	Name	Specification	QTY	LOCA NO
01.57.R.2.E102J	SMD resistor	0603-1KΩ±5%	2	KR7 KR5
01.57.R.2.E202J	SMD resistor	0603-2KΩ±5%	3	KR1 KR3 KR6
01.57.R.2.E332J	SMD resistor	0603-3.3KΩ±5%	2	KR2 KR4
01.39.SW.QC.ED665	Touch switch	6*6*5(DIP 300g)	10	SW1 SW2 SW3 SW4 SW5 SW6 SW7 SW8 SW9 SW10
01.40.CON.S13.AY1.004	Jack	1.25-4A(vertical) DIP	1	CN4
01.40.CON.S13.AY1.001	Jack	1.25-5A(vertical)DIP	1	CN3
01.37.PCB.2.E3770C	Circuit board	Key board3770C	1	
Bom No	Part No	Part Name	QTY	
LTD06T-3921C01	02.22.LTD06T3921C01	Remote control head board	1	
Part No	Name	Specification	QTY	LOCA NO

01.57.R.2.E101J	SMD resistor	0603-100Ω±5%	1	R16
01.57.R.2.E103J	SMD resistor	0603-10KΩ±5%	1	R17
01.54.CS.2.E105Y16V	SMD capacitor	0603-105 Y5V-20+80%/16 V	1	C5
01.34.CL.D.E10U16VC	Electrolyse capacitor	CD110-10UF/16 V 5*11	1	EC4
01.41.D.FD.E3RB	Radiation diode	φ3	1	LED
01.44.IC.D.E0038B	IC	HS0038B DIP	1	IR
01.40.CON.S13.AY1.002	Jack	1.25-6A(vertical)DIP	1	CON5
01.37.PCB.2.E3921C2	Circuit board	Remote control head board3921C-V2. 0	1	
Bom No	Part No	Part Name	QTY	
MINV19-05QM1B03	02.07.MINV1905QM1 B03	Inverter	1	
Part No	Name	Specification	QTY	LOCA NO
01.57.R.2.E2R2J	SMD resistor	0603-2.2Ω±5%	1	R21
01.57.R.2.E100J	SMD resistor	0603-10Ω±5%	2	R10 R22
01.57.R.2.E681J	SMD resistor	0603-680Ω±5%	4	R27 R30 R33 R36
01.57.R.2.E681F	SMD resistor	0603-680Ω 1%	4	R28 R31 R34 R37
01.57.R.2.E202J	SMD resistor	0603-2KΩ±5%	1	R9
01.57.R.2.E103J	SMD resistor	0603-10KΩ±5%	3	R41 R17 R40
01.57.R.2.E153J	SMD resistor	0603-15KΩ±5%	4	R23 R24 R25 R26
01.57.R.2.E203J	SMD resistor	0603-20KΩ±5%	1	R14
01.57.R.2.E223J	SMD resistor	0603-22KΩ±5%	4	R29 R32 R35 R38
01.57.R.2.E683J	SMD resistor	0603-68KΩ±5%	2	R13 R18
01.57.R.2.E104J	SMD resistor	0603-100KΩ±5 %	1	R20
01.57.R.2.E474J	SMD resistor	0603-470KΩ±5 %	1	R19
01.57.R.4.E561J	SMD resistor	1206-560Ω±5%	1	R4
01.57.R.4.E102J	SMD resistor	1206-1KΩ±5%	1	R3
01.54.CS.2.E101N	SMD capacitor	0603-100P NPO±5%/50V	2	C13 C14
01.54.CS.2.E820N	SMD capacitor	0603-82P NPO±5%/50V	1	C6
01.54.CS.2.E821N	SMD capacitor	0603-820P NPO±5%/50V	1	C10
01.54.CS.2.E222X	SMD capacitor	0603-222 X7R±10%/50V	4	C16 C17 C18 C19
01.54.CS.2.E472X	SMD capacitor	0603-472 X7R±10%/50V	2	C27 C31 C35 C39
01.54.CS.2.E103X	SMD capacitor	0603-103 X7R±10%/50V	5	C9 C28 C32 C36 C40
01.54.CS.2.E223X	SMD capacitor	0603-223 X7R±10%/50V	1	C7
01.54.CS.2.E104Y	SMD capacitor	0603-104 Y5V-20+80%/50 V	1	C12

01.54.CS.2.E474Y	SMD capacitor	0603-474 Y5V+80-20%/50 V	1	C15
01.54.CS.2.E105Y16V	SMD capacitor	0603-105 Y5V-20+80%/16 V	4	C3 C4 C8 C11
01.54.CS.6.E100	SMD capacitor	1808-10P/3KV NPO±5%	4	C26 C30 C34 C38
01.35.CC.E121010U25VX	SMD ceramic capacitor	C3225X5R1E10 6KT	4	C21 C23 C22 C24
01.34.CL.D.E220U25VD1	Electrolyse capacitor	220UF/25V 8*12 （±20%,105℃, LOW ESR）	2	C1 C2
01.41.D.PS.EBAW56	Diode	BAW56 SMD	2	D1 D2
01.41.D.PS.EBAV99	Diode	BAV99LT1 SMD	8	D3 D04 D05 D06 D07 D08 D09 D10
01.41.D.PS.E1SS355	Diode	1SS355 SMD	1	D11
01.41.D.WS.EUDZ7V5B	Diode	UDZ7V5B(7.5V)	1	ZD1
01.42.Q.S.E2N3904	Audion	2N3904 SMD	2	Q1 Q4
01.42.Q.S.E2N3906	Audion	2N3906 SMD	1	Q5
01.42.Q.S.E2N7002	Transistor	2N7002 SMD	1	Q6
01.44.IC.S.E4511	Transistor	AP4511 SMD	2	Q7 Q8
01.44.IC.S.E3193	IC	Bit3193 SMD	1	IC1
01.38.FUSE.S.EF1206HI3000	Fuse	F1206HI-3000 SMD	1	F1
01.38.FUSE.S.E66003	Fuse	0466003.NR	1	F1
01.13.L.R.E108	Transformer	NIA19LES017	2	TR1 TR2
01.00.YS.TZ.T.E747		Label001	2	
01.40.CON.DPH.E063	Jack	PH-5A Horizontal	1	J1
01.40.CON.S35.E001	SMD hi-voltage jack	3.5-2P	4	J02 J03 J04 J05
01.37.PCB.2.E3678C	Circuit board	Inverter board3678C	1	