SERVICE MANUAL

ELENBERG LTV-3203

LVD3203 SERVICE MANUAL

CONTENT

PART 1：Brief Introduction Of The LVD3203

- Schematic Diagram
- Printed Circuit

PART 2: Detailed Circuit

- Main Board
- Interface Board
- Connecting Board
- Receiver Board
- Keystoke Board

PART 3: Parts List

Part 1 Brief Introduction Of The LVD3203

Schematic Diagram

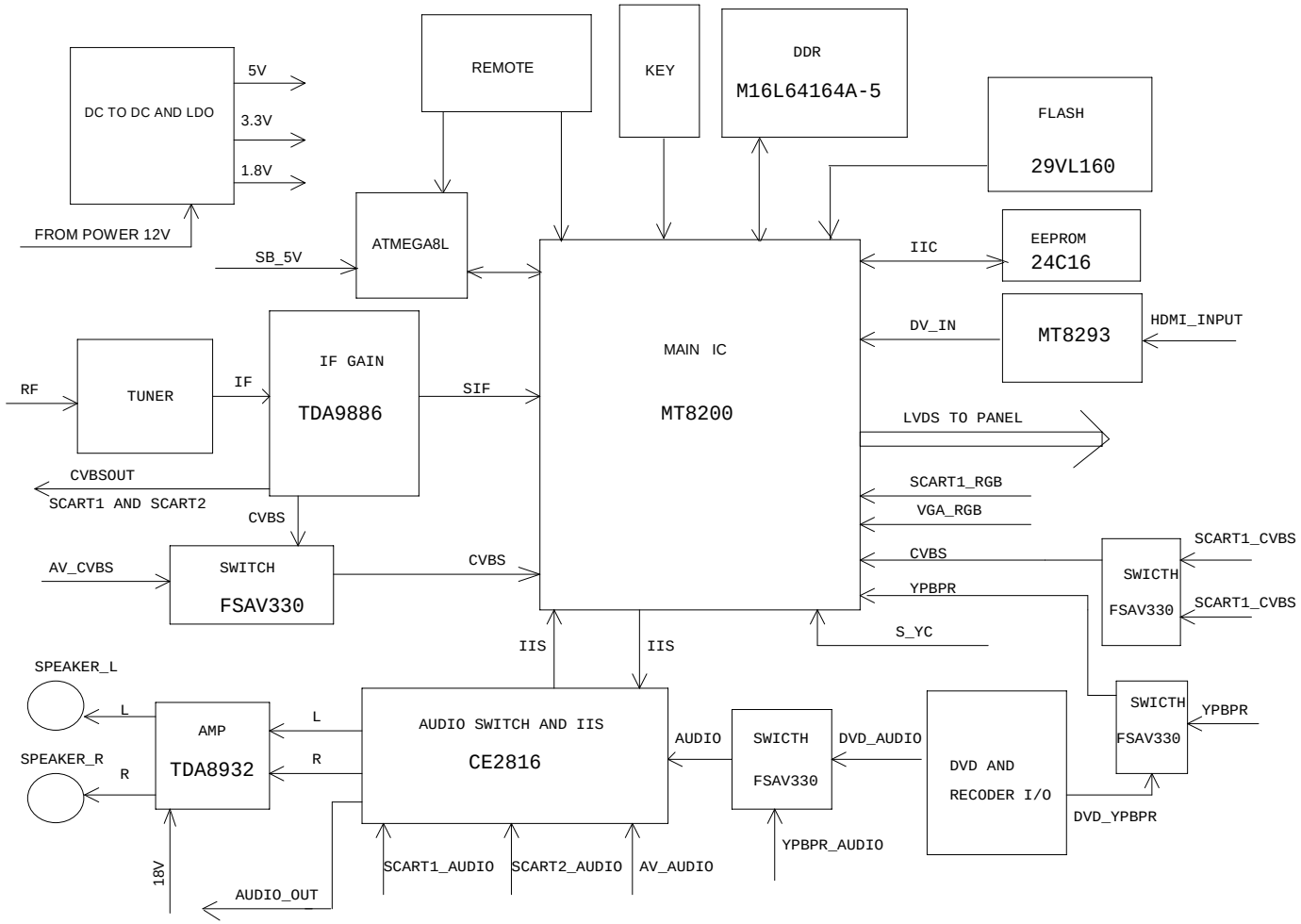

Printed Circuit

1. Main board 3827C

A: TOP LAYER

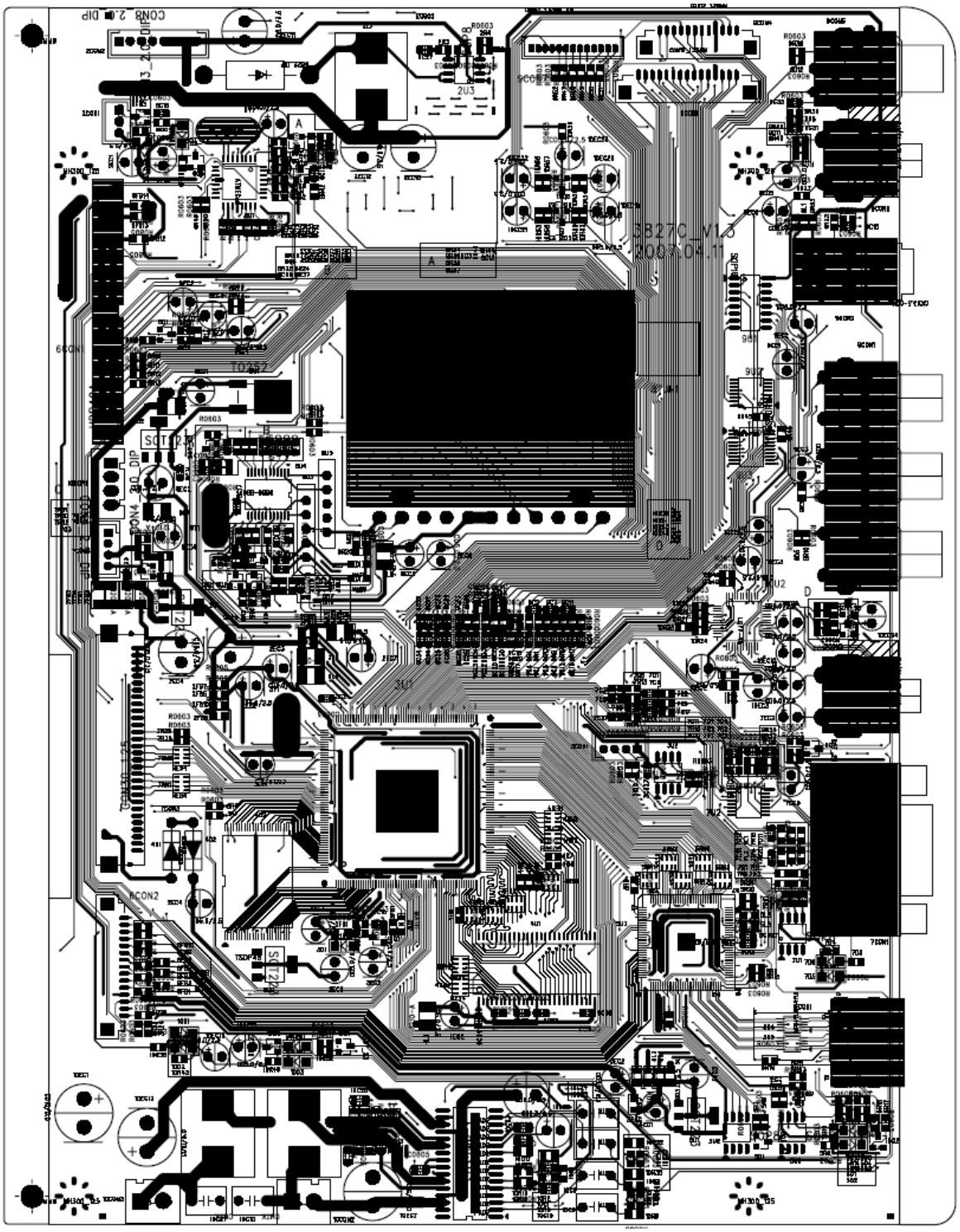

B: BOTTOM LAYER

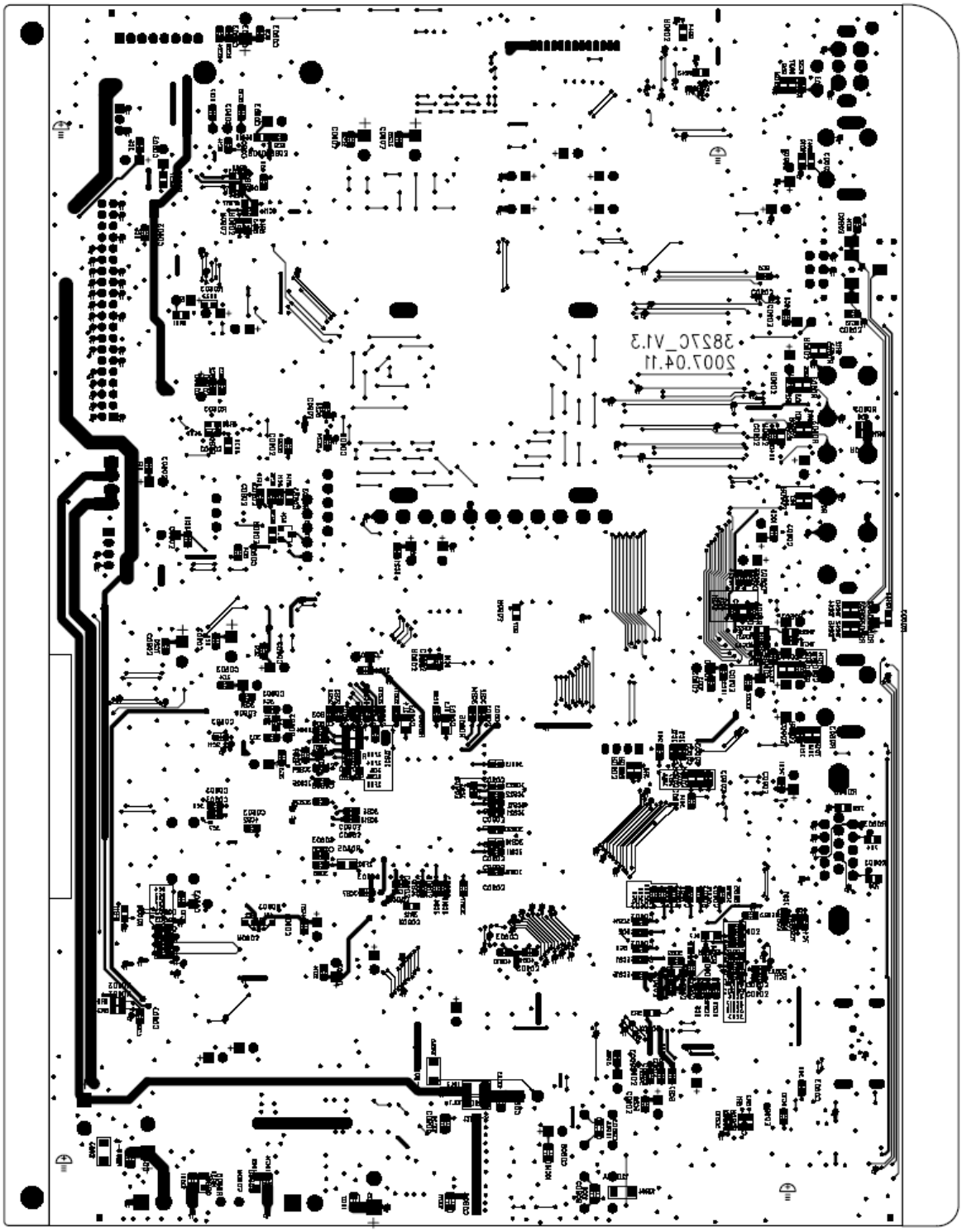

2. Interface Board 5105C

A: TOP LAYER

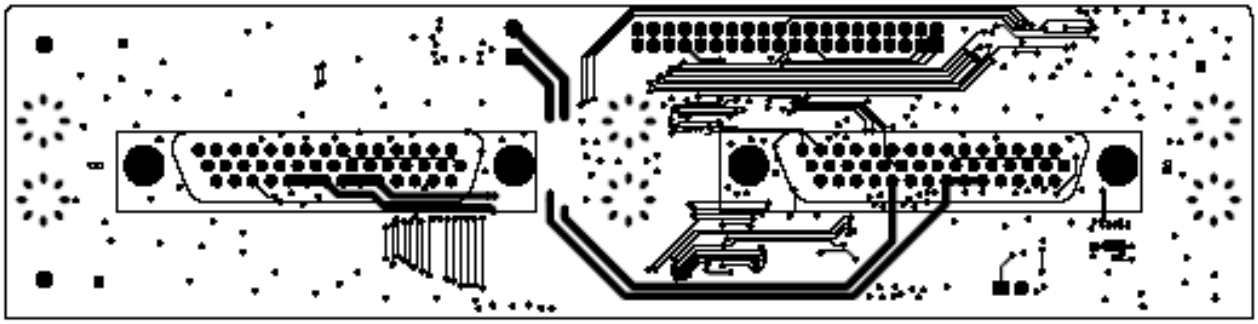

B: BOTTOM LAYER

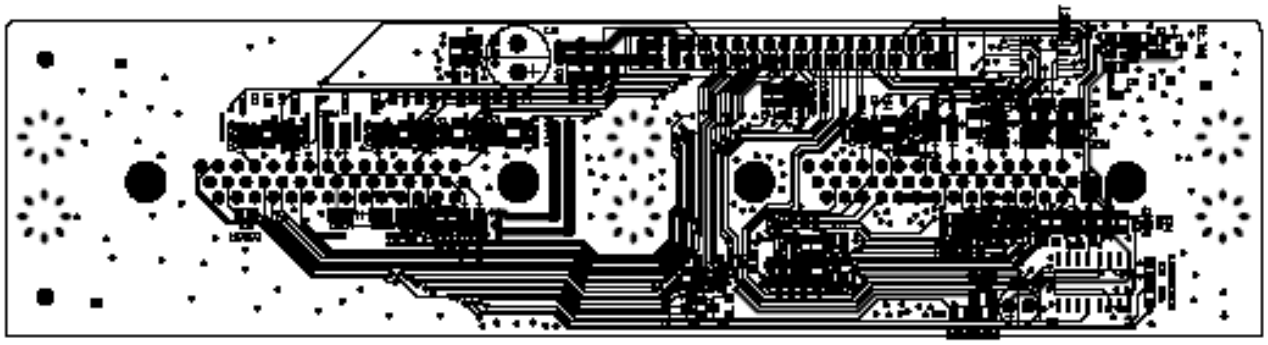

3. Connecting Board 3830C

A: TOP LAYER

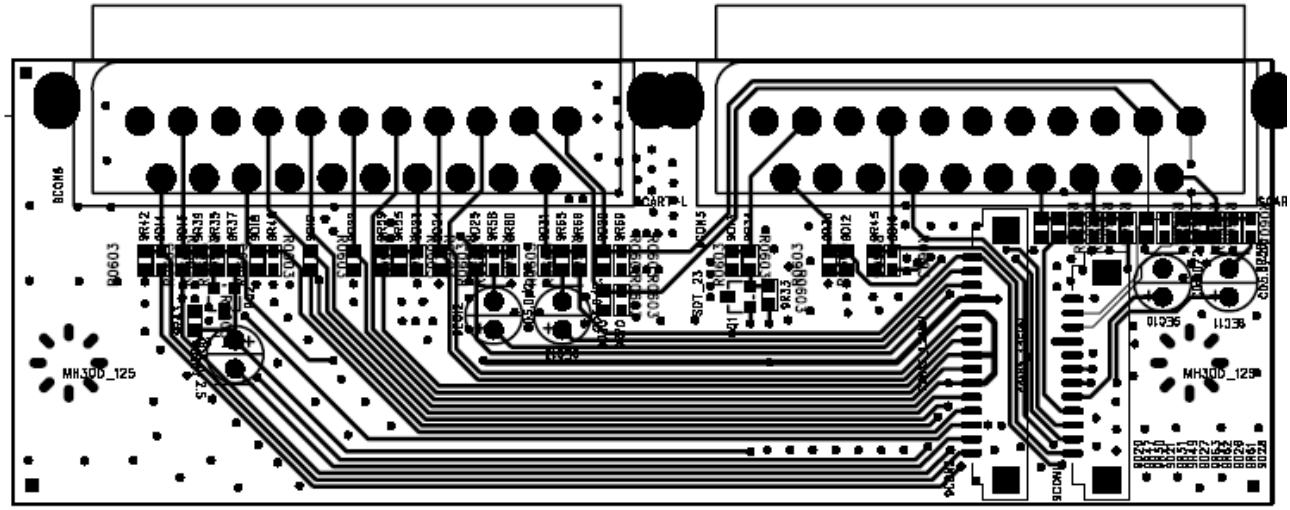

B: BOTTOM LAYER

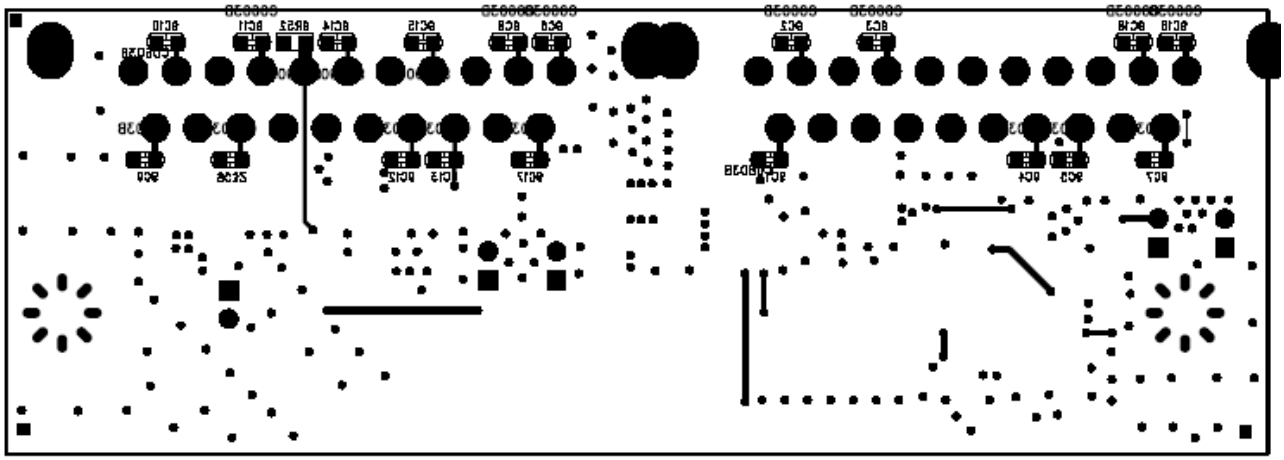

4. Receiver Board3828C

A: TOP LAYER

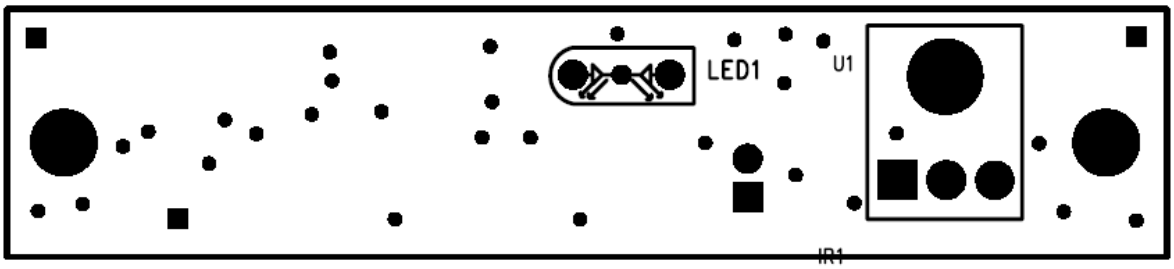

B: BOTTOM LAYER

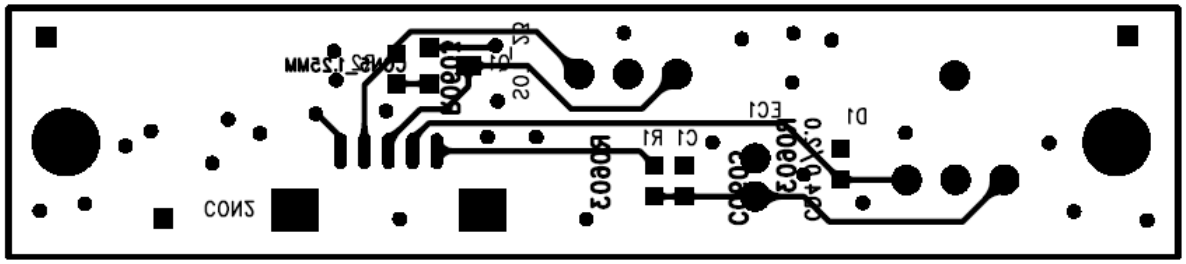

5. Keystoke board3829C

A: TOP LAYER

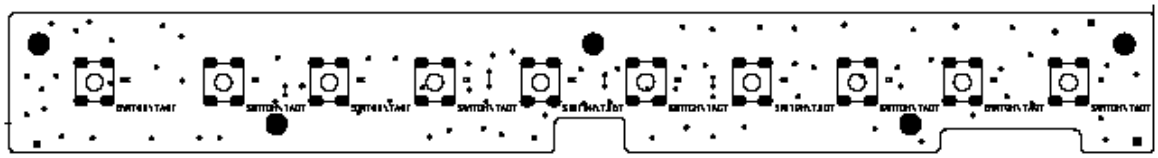

B: BOTTOM LAYER

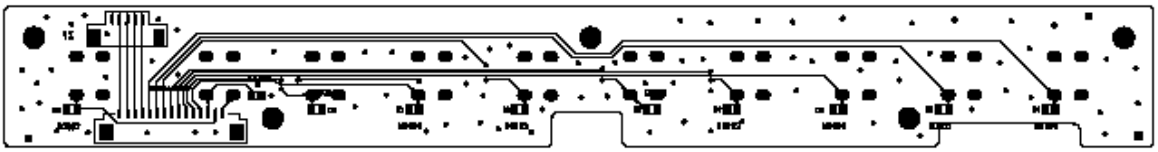

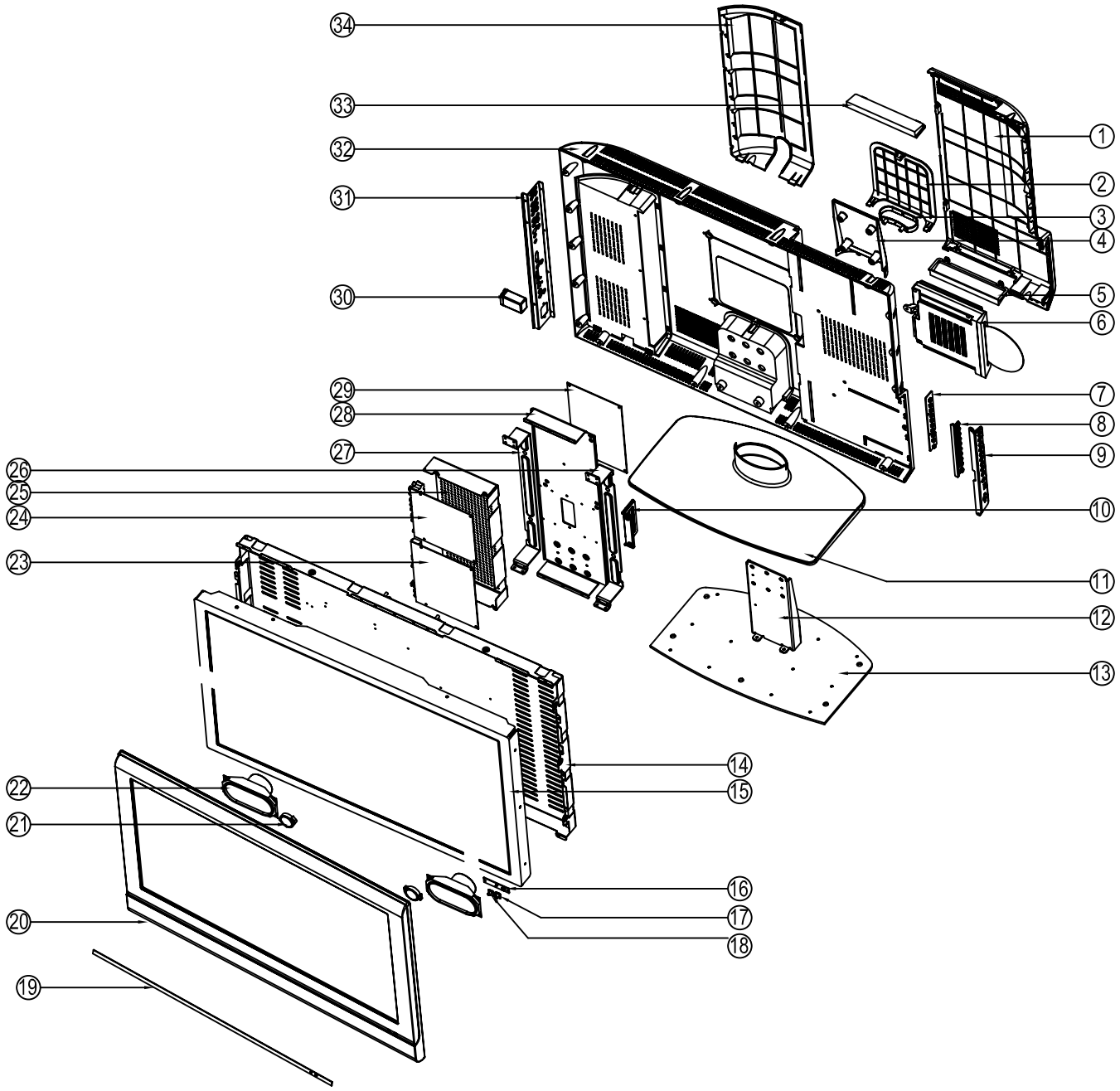

Item	SPECIFICATION	Qty	Material
34	TV back cover	1	ABS
33	DVD socket cover	1	ABS
32	Back frame	1	ABS
31	Jack fixing board	1	ABS
30	Power socket	1	
29	Power boardMLT-268A	1	
28	Bracket link board	1	
27	Ledge fixing board(Left)	1	STEEL
26	Ledge sixing board (Right)	1	STEEL
25	Main board shield-cover	1	STEEL
24	TV board	1	
23	Main board 2713C01	1	
22	Sackbut	1	
21	Althorn	1	
20	Front frame	1	ABS
19	Front frame adronment bar	1	PMMA
18	Transparency LED	1	PMMA
17	Remote window	1	PMMA
16	Remote receive board 2635C01	1	
15	32 Inch LCD	1	
14	LCD shield-cover	1	STEEL
13	Metal soleplate	1	STEEL
12	Pedestal bracket	1	ABS
11	Pedestal	1	ABS
10	DVD module board	1	
9	Keypad bracket	1	ABS
8	Functional keypad	1	ABS
7	Key pad board	1	
6	DVD module	1	
5	DVD jack fixing board	1	ABS
4	Pedestal back cover board	1	ABS
3	String clip	1	ABS
2	Pedestal back cover	1	ABS
1	DVD back cover	1	ABS

Spare Parts List (LVD-3203)

Item	Description	QTY	Part № (Код ЗЧД=Номер ЗЧД)
1	DVD BACK COVER	1	LVD-3203-1
2	PEDESTAL BACK COVER	1	LVD-3203-2
3	STRING CLIP	1	LVD-3203-3
4	PEDESTAL BACK COVER BOARD	1	LVD-3203-4
5	DVD JACK FIXING BOARD	1	LVD-3203-5
6	DVD MODULE	1	LVD-3203-6
7	KEY PAD BOARD	1	LVD-3203-7
8	FUNCTIONAL KEYPAD	1	LVD-3203-8
9	KEYPAD BRACKET	1	LVD-3203-9
10	DVD MODULE BOARD	1	LVD-3203-10
11	PEDESTAL	1	LVD-3203-11
12	PEDESTAL BRACKET	1	LVD-3203-12
13	METAL SOLEPLATE	1	LVD-3203-13
14	LCD SHIELD-COVER	1	LVD-3203-14
15	32 INCH LCD	1	LVD-3203-15
16	REMOTE RECEIVE BOARD 2635C01	1	LVD-3203-16
17	REMOTE WINDOW	1	LVD-3203-17
18	TRANSPARENCY LED	1	LVD-3203-18
19	FRONT FRAME ADRONMENT BAR	1	LVD-3203-19
20	FRONT FRAME	1	LVD-3203-20
21	ALTHORN	1	LVD-3203-21
22	SACKBUT	1	LVD-3203-22
23	MAIN BOARD 2713CO01	1	LVD-3203-23
24	TV BOARD	1	LVD-3203-24
25	MAIN BOARD SHIELD-COVER	1	LVD-3203-25
26	LEDGE FIXING BOARD (RIGHT)	1	LVD-3203-26
27	LEDGE FIXING BOARD (LEFT)	1	LVD-3203-27
28	BRACKET LINK BOARD	1	LVD-3203-28
29	POWER BOARD MLT-268A	1	LVD-3203-29
30	POWER SOCKET	1	LVD-3203-30
31	JACK FIXING BOARD	1	LVD-3203-31
32	BACK FRAME	1	LVD-3203-32
33	DVD SOCKET COVER	1	LVD-3203-33
34	TV BACK COVER	1	LVD-3203-34
35	REMOTE CONTROL	1	LVD-3203-35

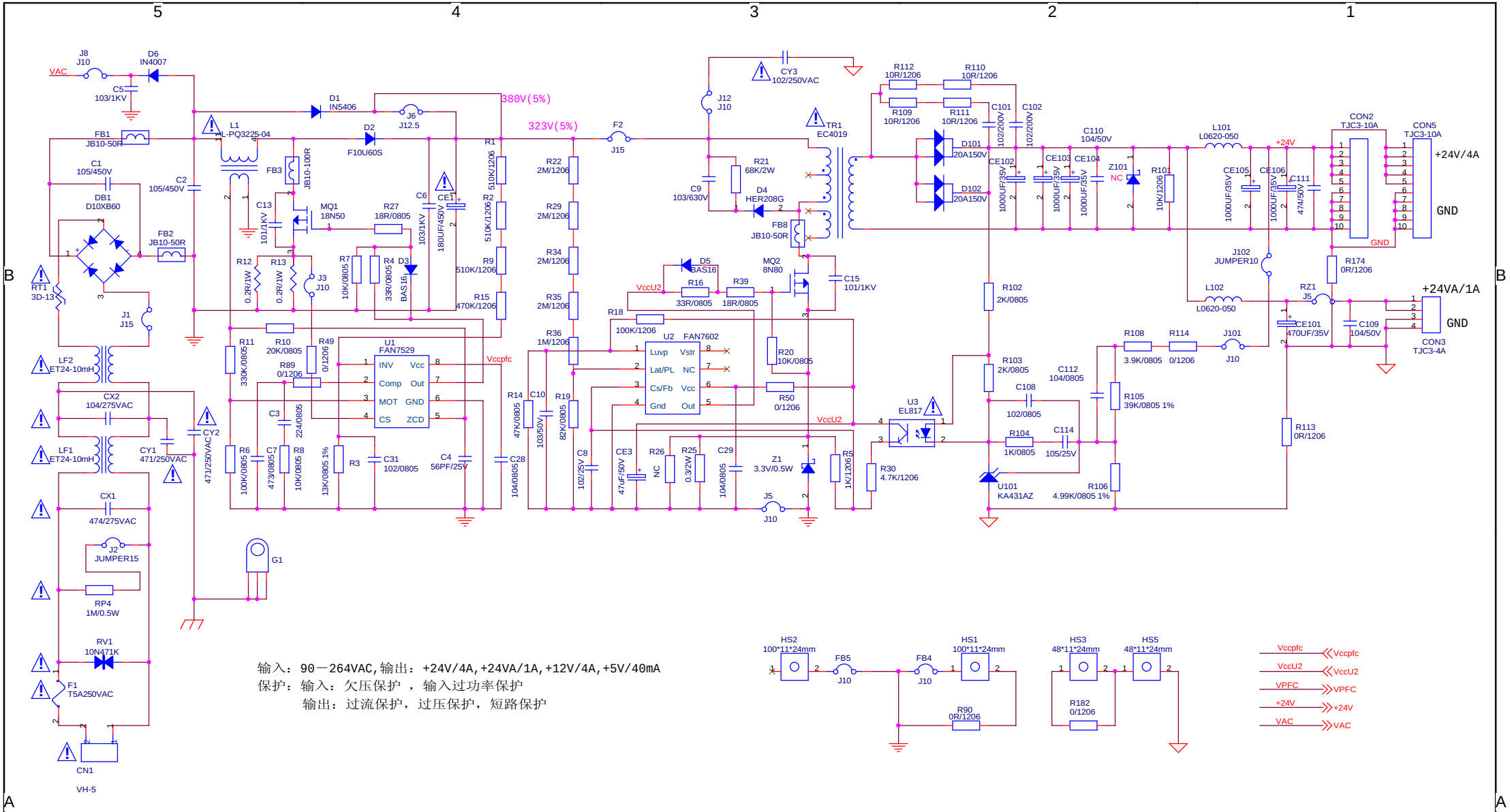

输入：90—264VAC,输出：+24V/4A,+24VA/1A,+12V/4A,+5V/40mA
保护：输入：欠压保护 ，输入过功率保护
输出：过流保护，过压保护，短路保护

背光和功放供电		
Title: MPB-0632C电源板5100C原理图		
Size: A3	Document Number: <Doc>	Rev: 1.4
Date: Wednesday, August 22, 2007	Sheet 1 of 1	

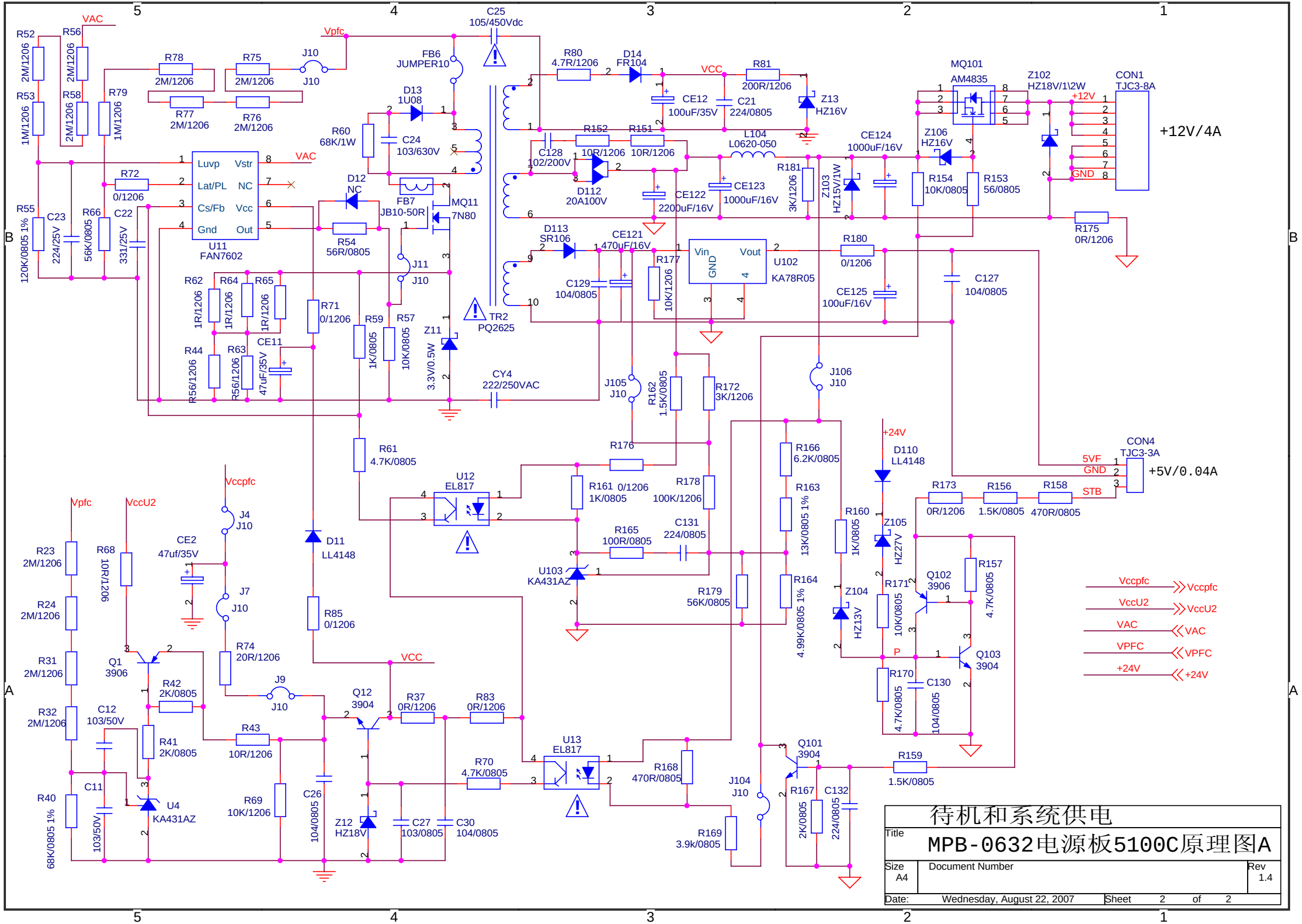
待机和系统供电
MPB-0632电源板5100C原理图A
Title
Size A4
Document Number
Rev 1.4
Date: Wednesday, August 22, 2007
Sheet 2 of 2
+12V/4A
+5V/0.04A
CON1 TJC3-8A
CON4 TJC3-3A
MQ101 AM4835
U11 FAN7602
U102 KA78R05
TR2 PQ2625
MQ11 7N80
U12 EL817
U13 EL817
U103 KA431AZ
U4 KA431AZ
Vccpfc
VccU2
VAC
VPFC
+24V
VCC

Part 2 Detailed Circuit

MAIN BOARD

1)LDO&POWER

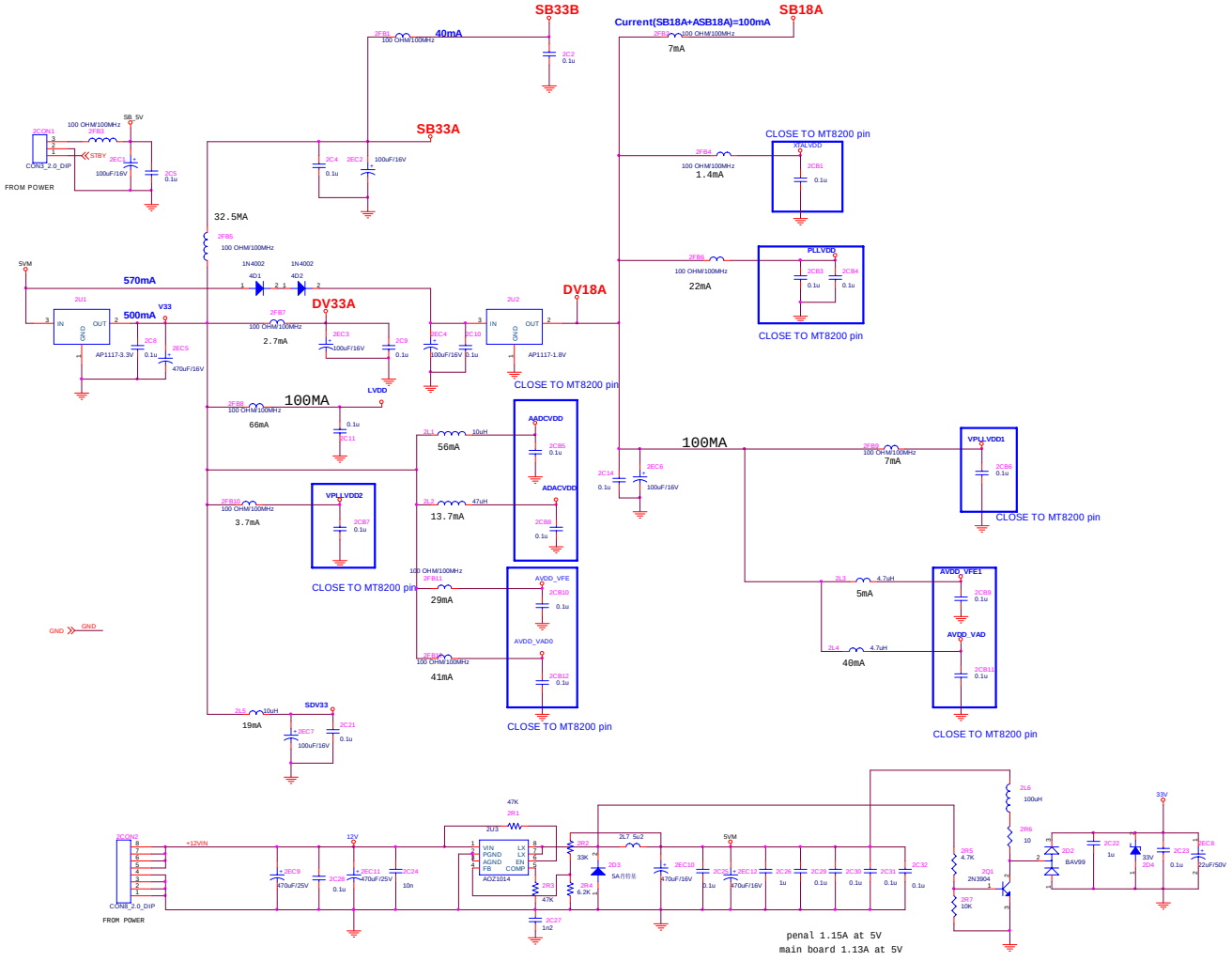

2)MT8200 E-PAD LQFP256L

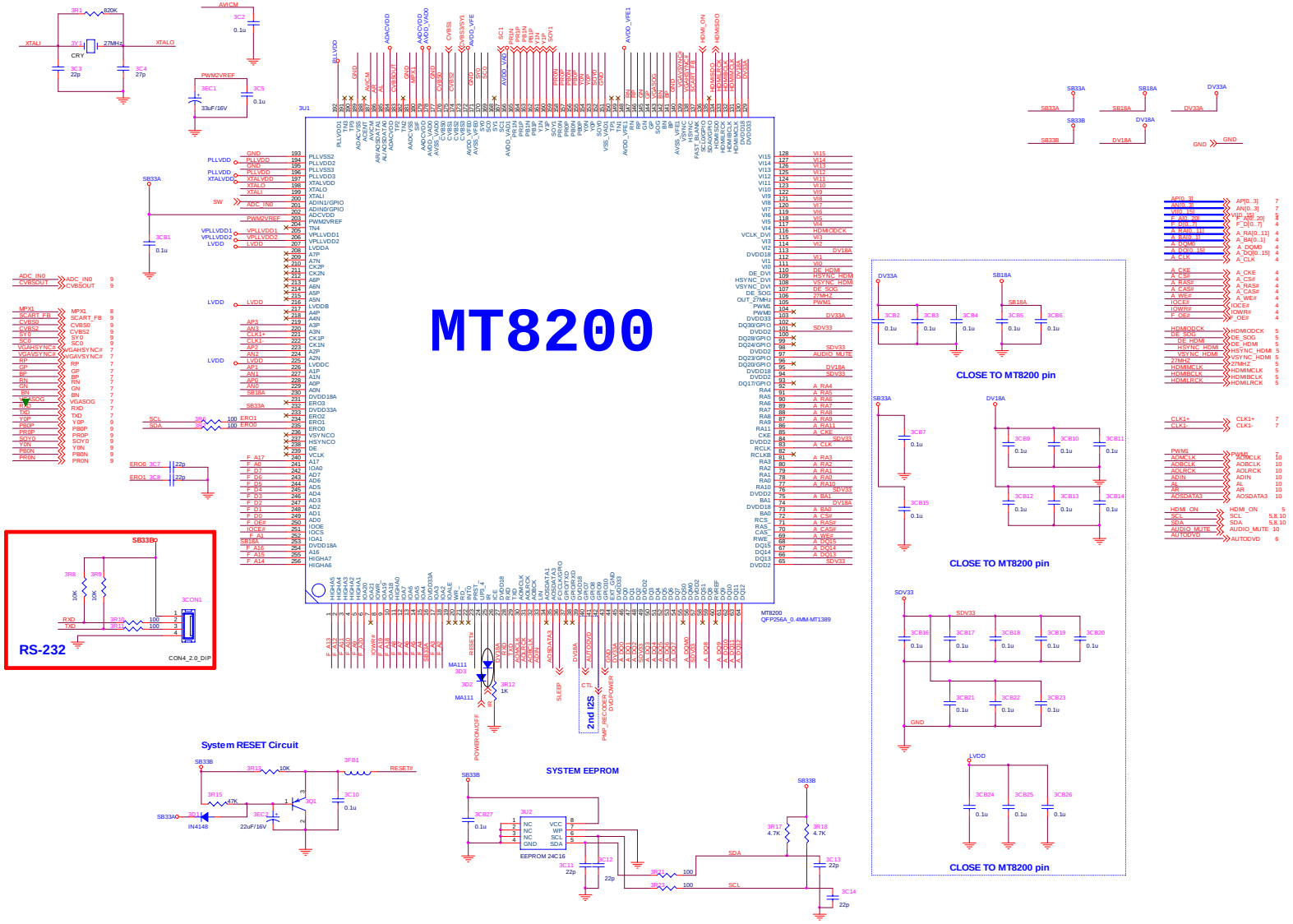

3)SDRAM MEMORY & FLASH

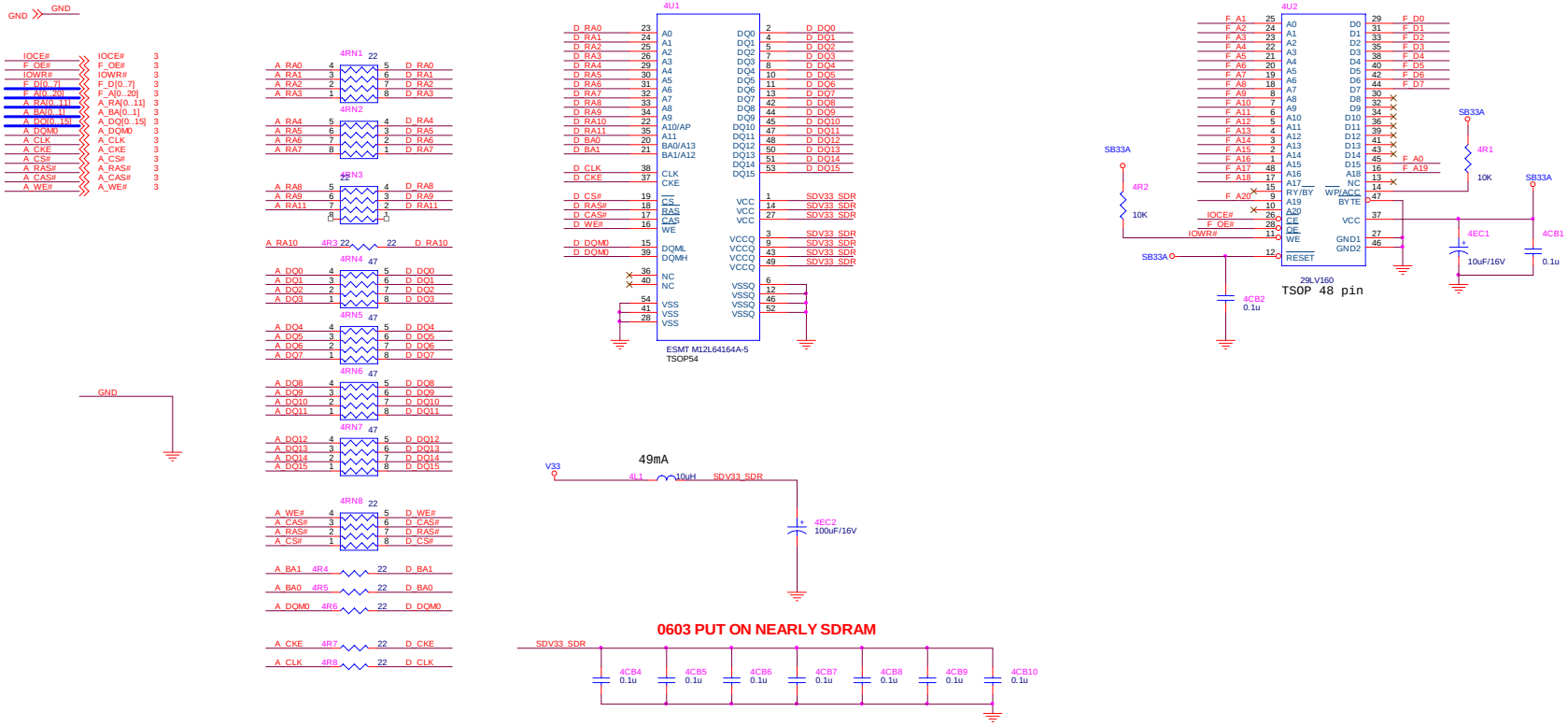

4)HDMI RECEIVER-MT8293

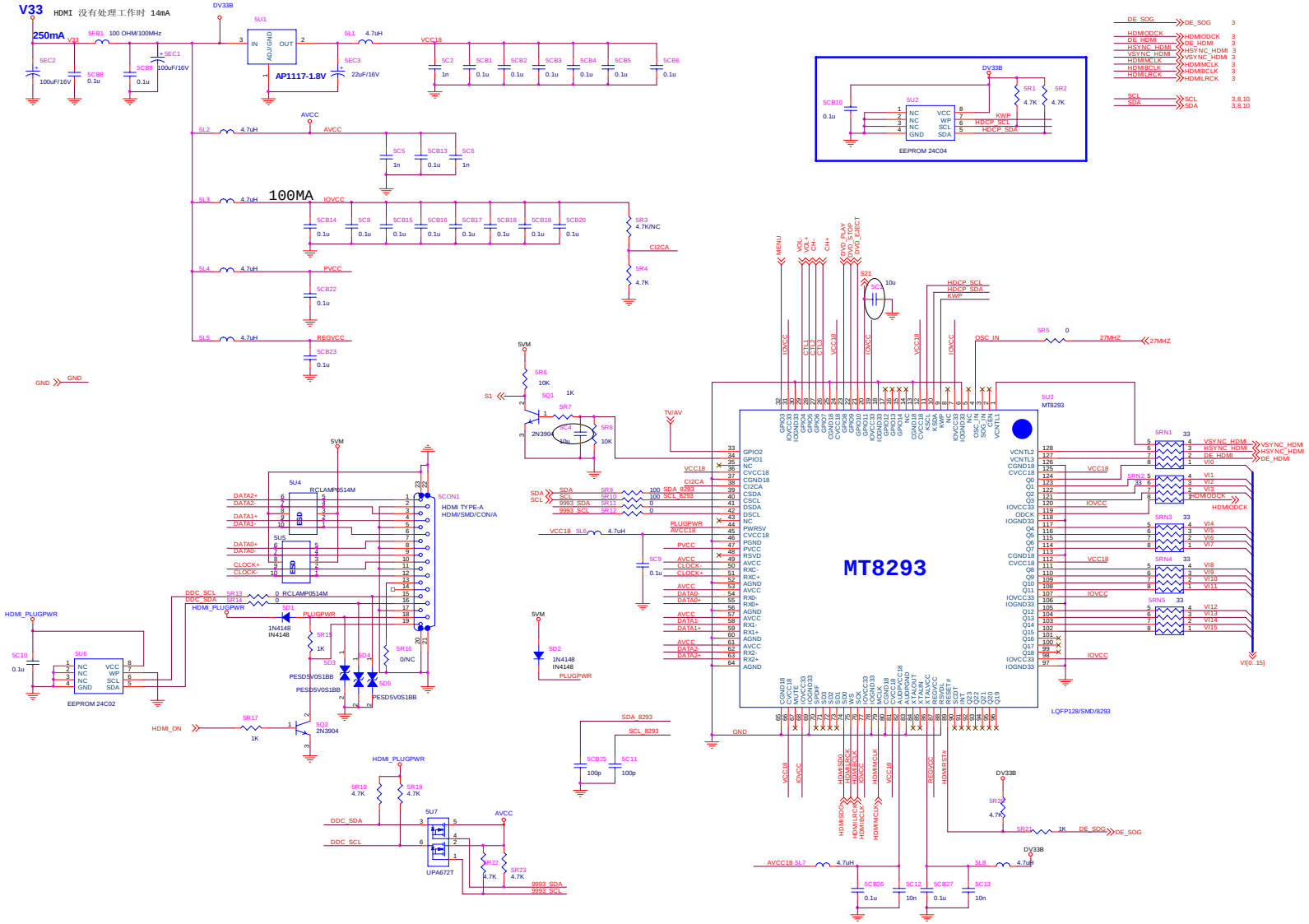

5)KEY/MCU AND DVD

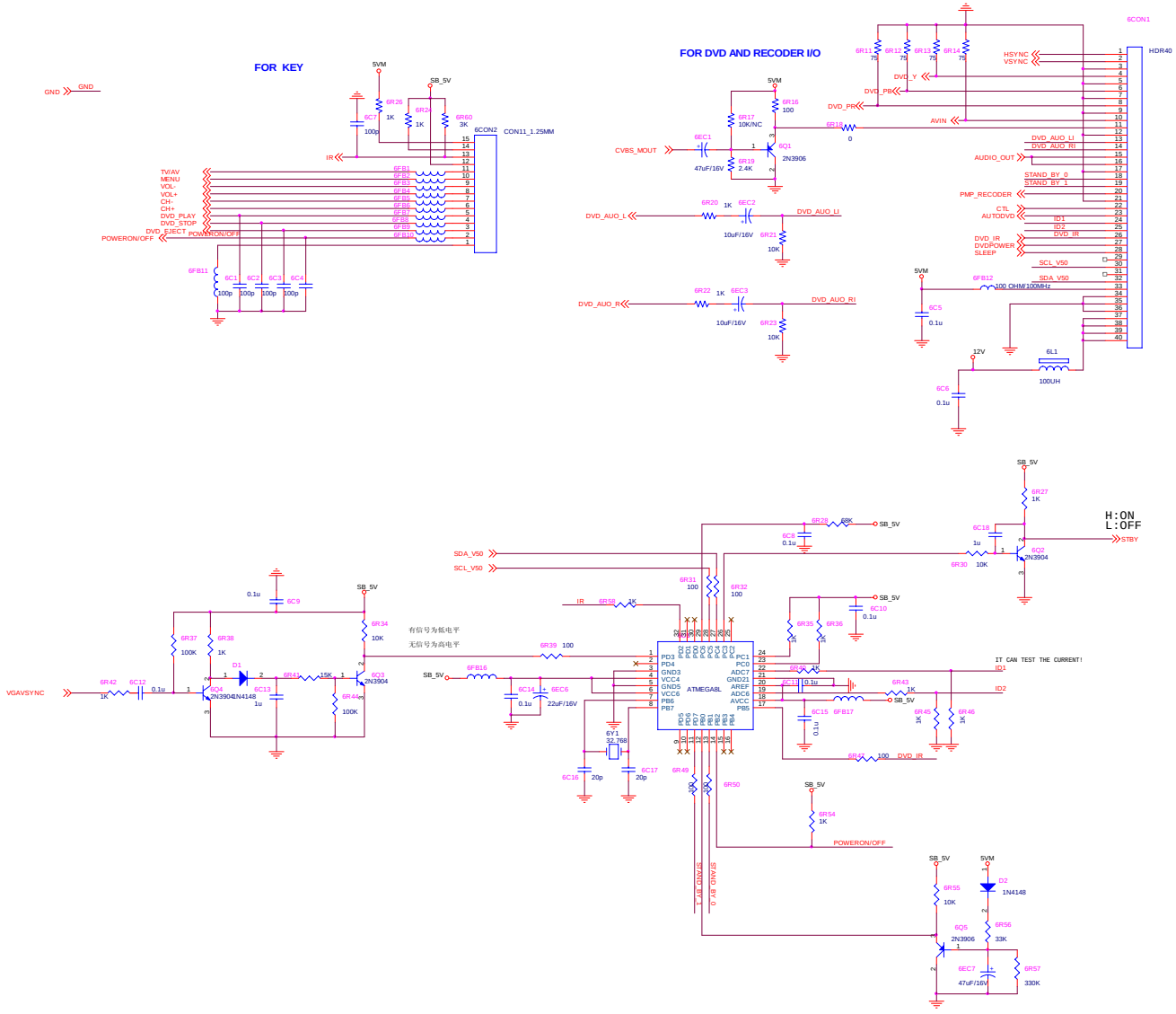

6)PC VIDEO/AUDIO/LVDSIO

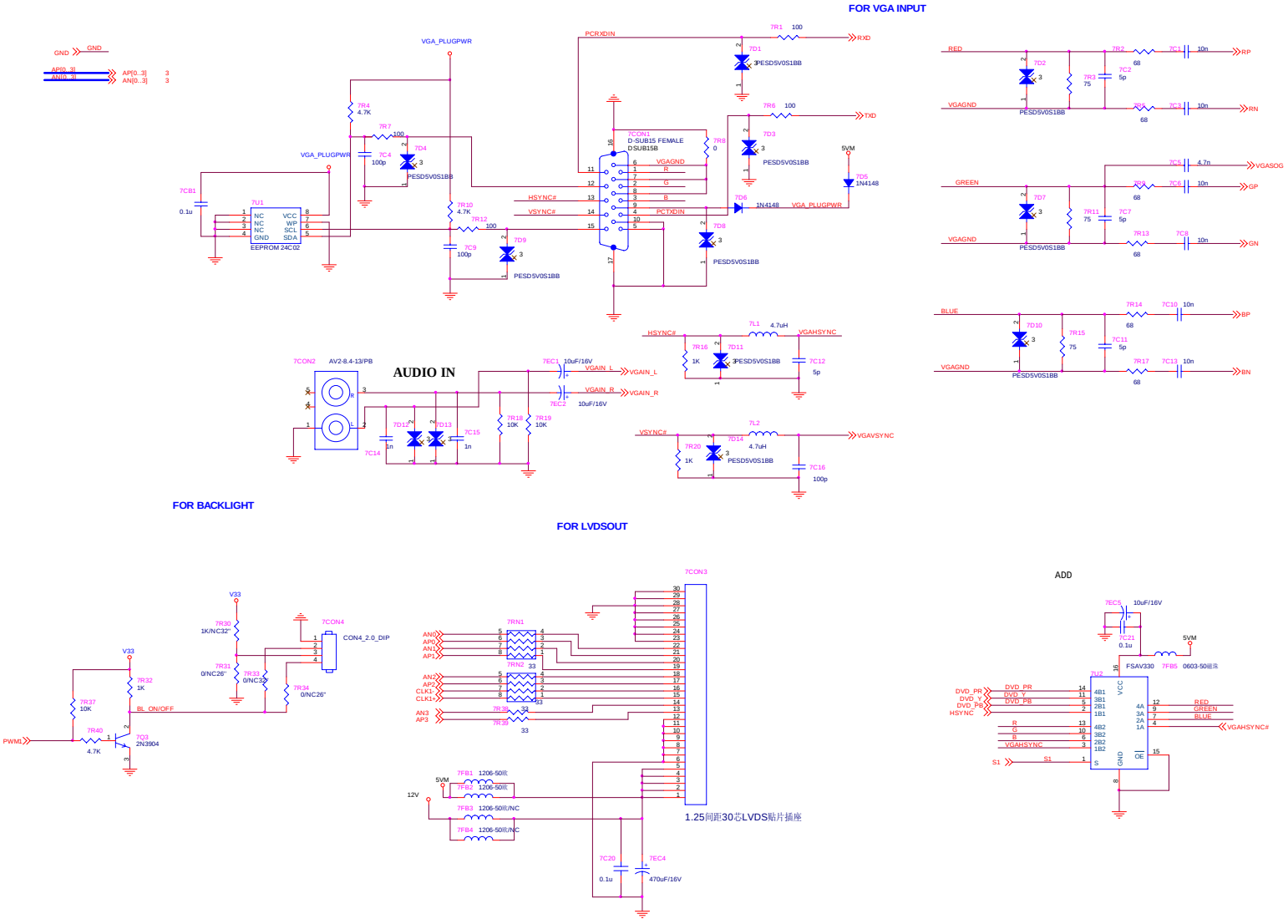

7)TUNER INPUT&OUTPUT

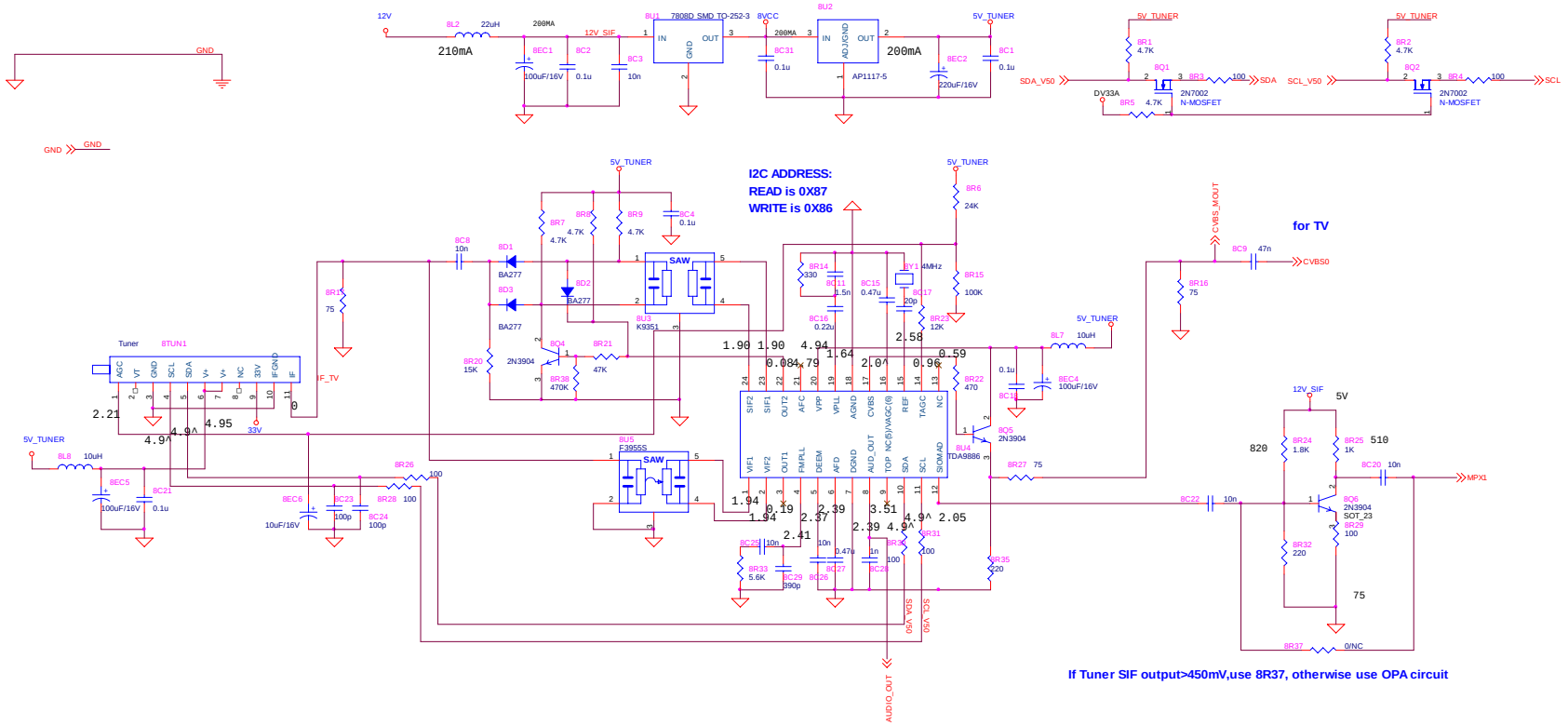

8)SOURCE INPUT&SCRAT OUT

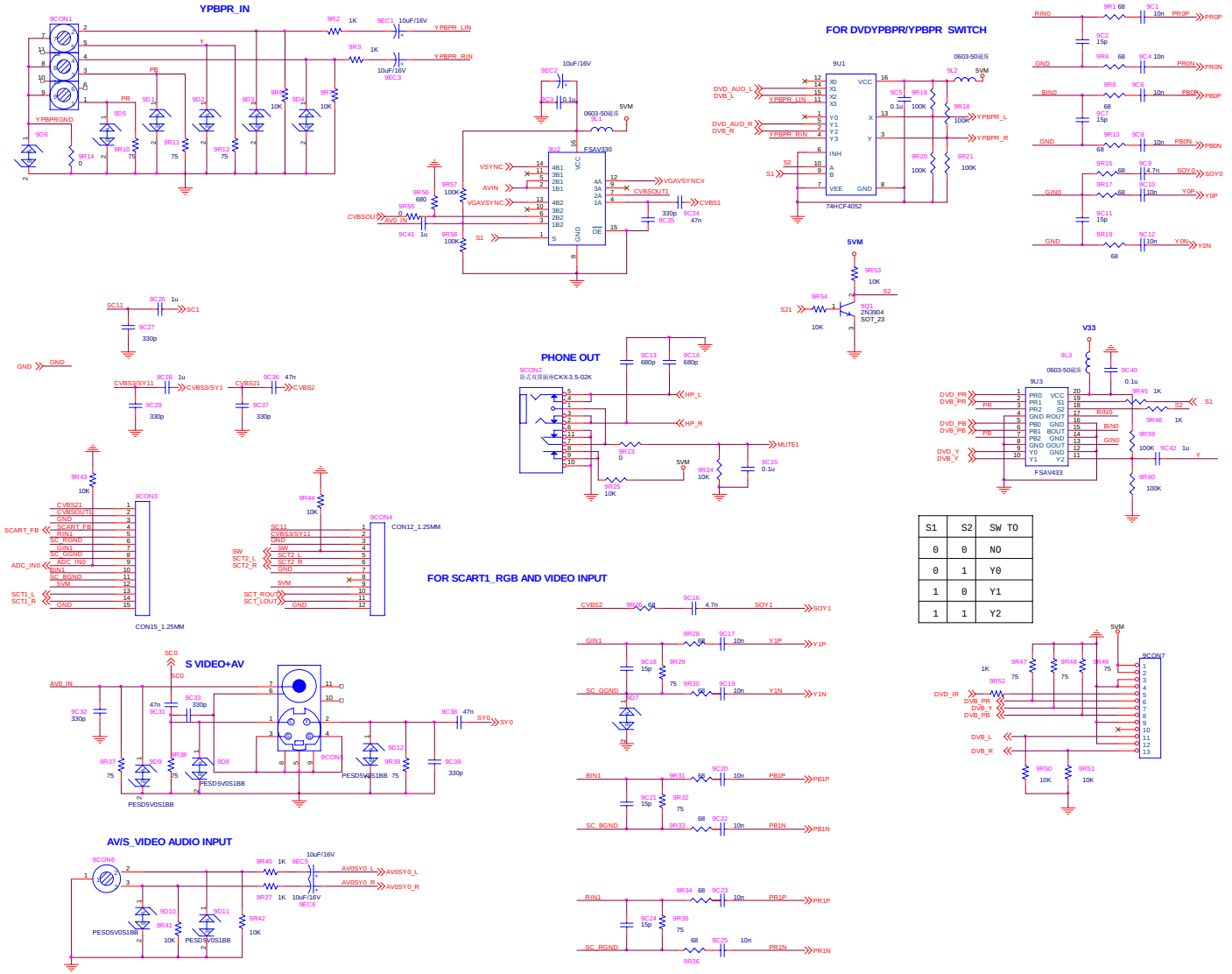

S1	S2	SW TO
0	0	NO
0	1	Y0
1	0	Y1
1	1	Y2

9)AUDIO CODEC&AMP

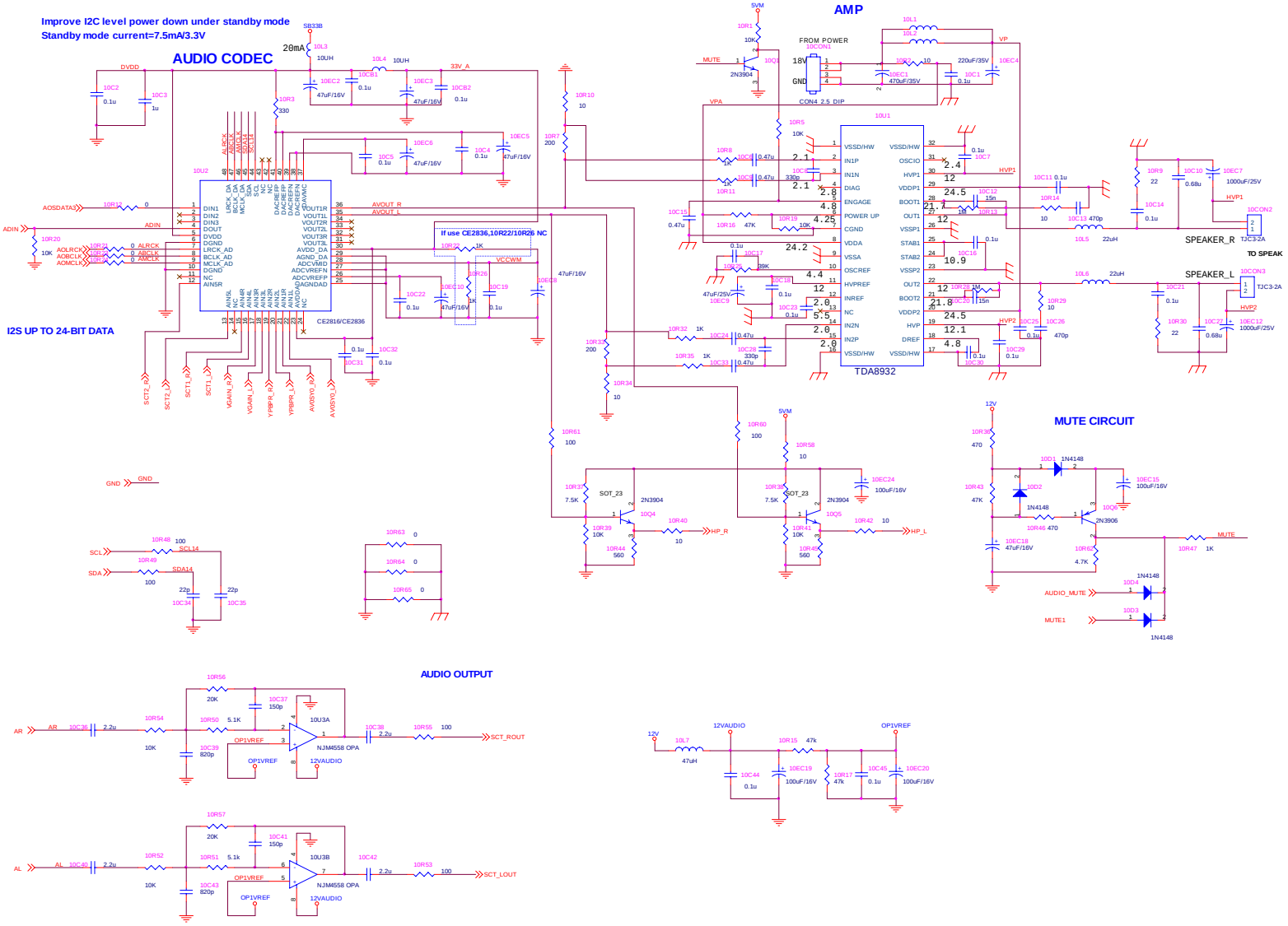

INTERFACE BOARD

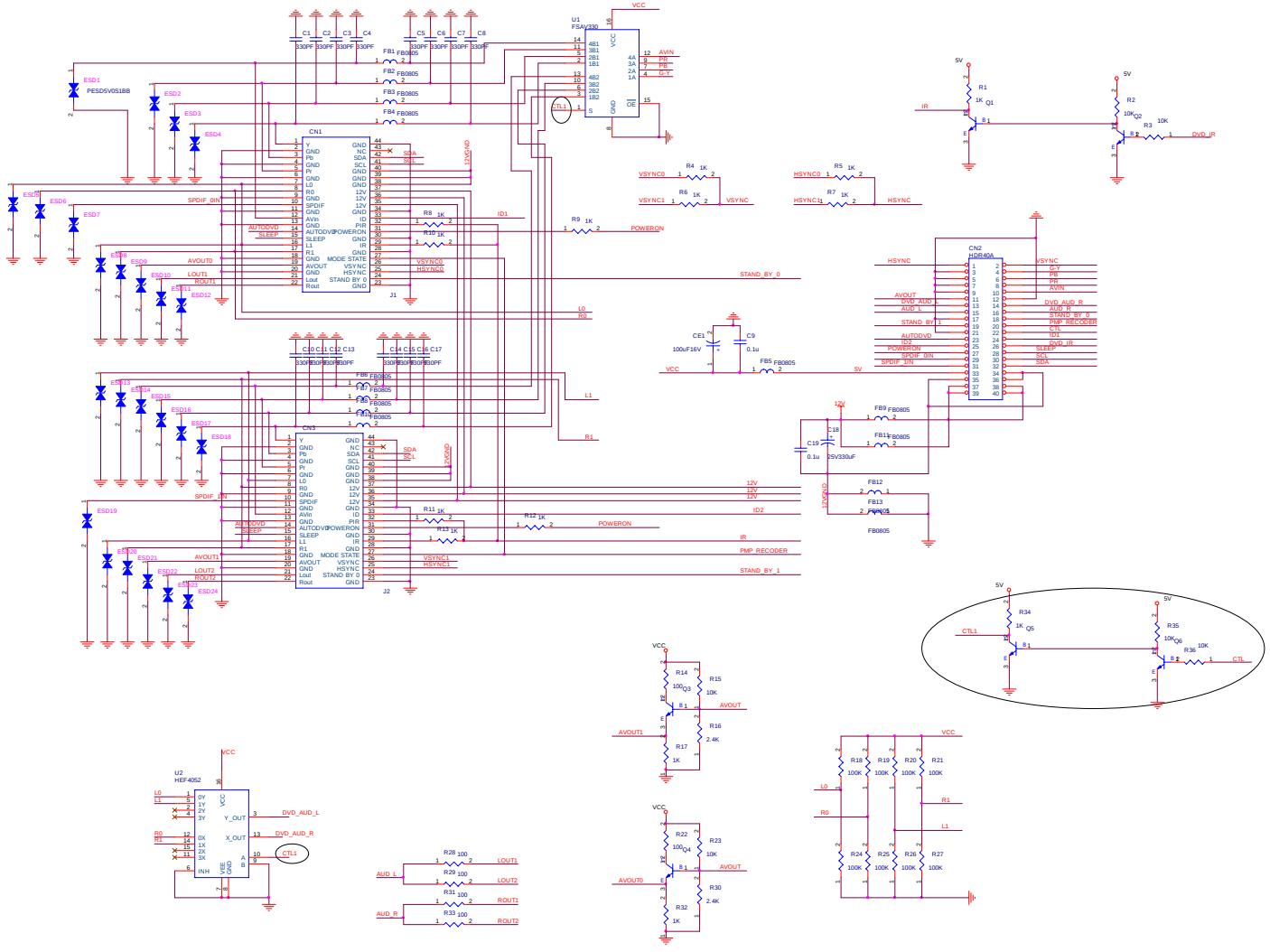

CONNECTING BOARD

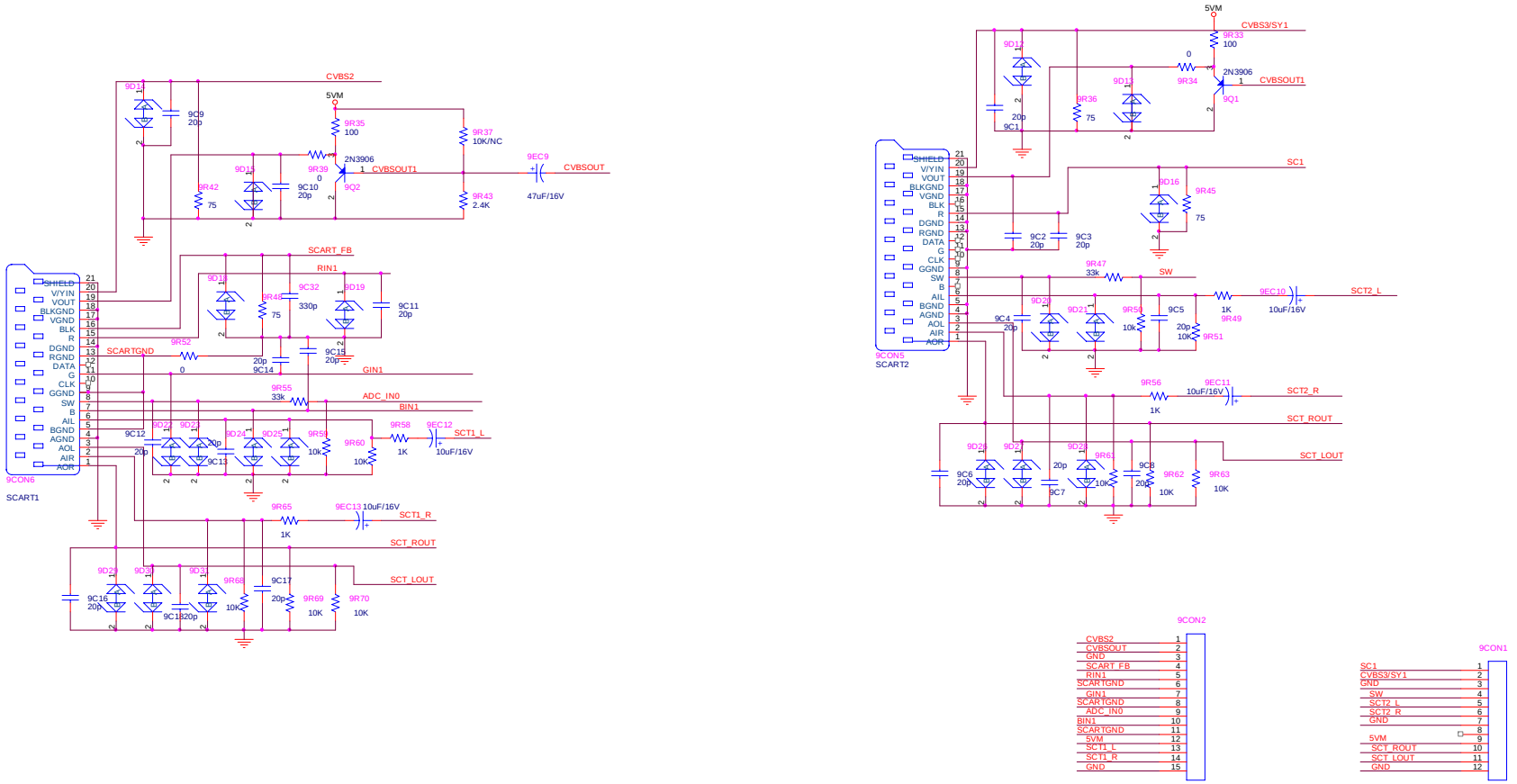

RECEIVER BOARD

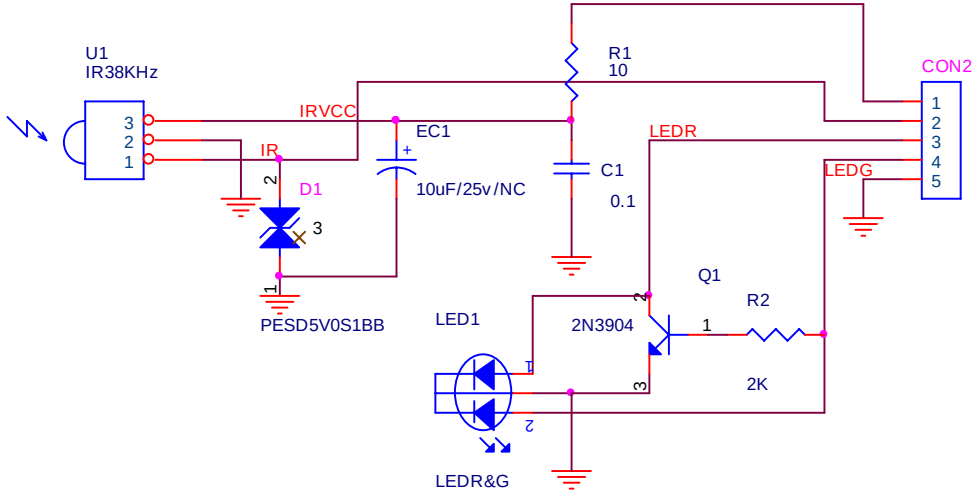

KEYSTOKE BOARD

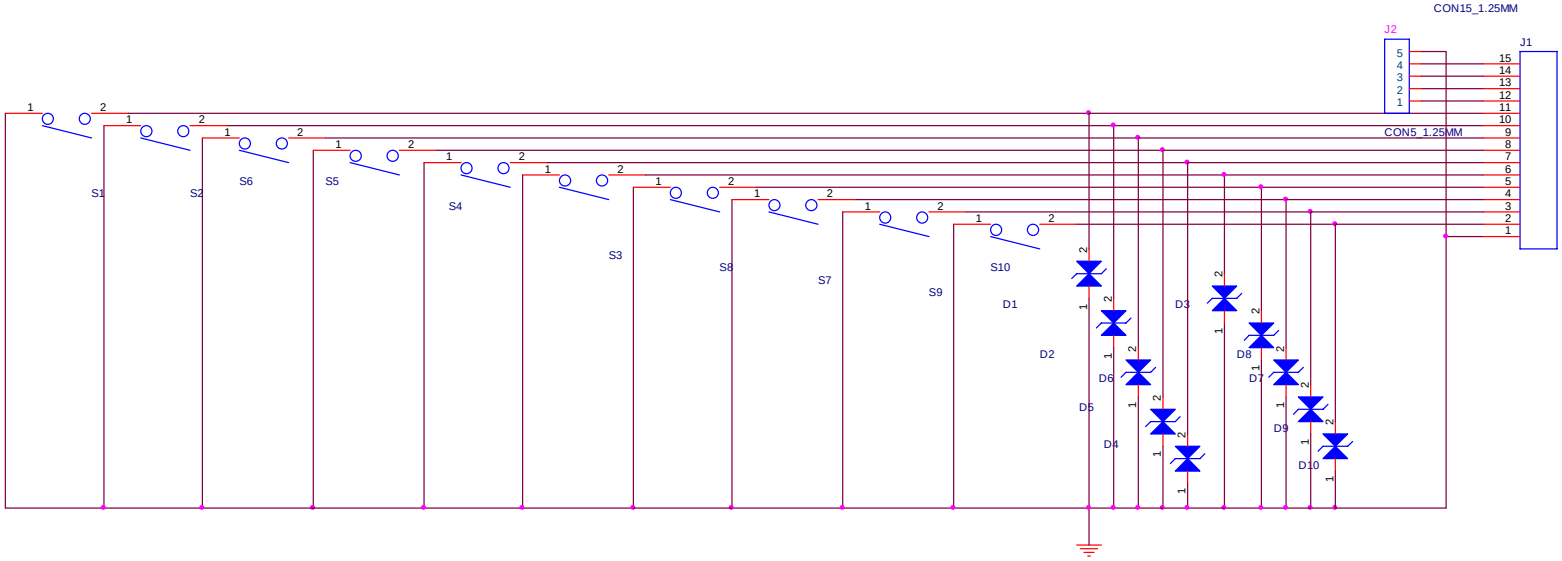

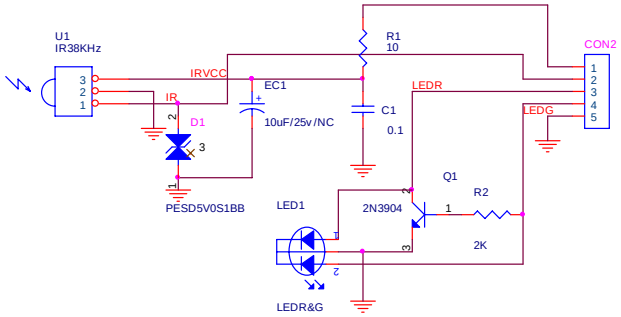

Part3 Part list of LVD3203

Bom NO.	Part NO.	Part Name	Qty.	
LTD06M-3827C01	02.11.LTD06M3827C01	Main board	1	
Part NO.	Name	Spec.	Qty.	Loca.
01.57.R.2.E000J	SMD Resistor	0603-0Ω ±5%	15	5R5 5R11 5R12 5R13 5R14 6R18 (7R8) 7R31 (9R14) 9R23 10R12 10R21 10R23 10R24 9R55
01.57.R.4.E000J	SMD Resistor	1206-0Ω ±5%	3	(10R63) (10R64) (10R65)
01.57.R.2.E100J	SMD Resistor	0603-10Ω±5%	2	(10R40) (10R42)
01.57.R.3.E100J	SMD Resistor	0805-10Ω±5%	3	10R2 10R14 10R29
01.57.R.2.E220J	SMD Resistor	0603-22Ω±5%	6	4R3 4R4 4R5 4R6 4R7 4R8
01.57.R.3.E220J	SMD Resistor	0805-22Ω±5%	2	(10R9) (10R30)
01.57.R.2.E330J	SMD Resistor	0603-33Ω±5%	2	7R38 7R39
01.57.R.2.E560J	SMD Resistor	0603-56Ω±5%	1	(10R58)
01.57.R.2.E680J	SMD Resistor	0603-68Ω±5%	21	7R2 7R5 7R9 7R13 7R14 7R17 9R13 9R1 9R4 9R8 9R15 9R17 9R19 (9R26) 9R28 9R30 9R31 9R33 9R34 9R36 8R27
01.57.R.2.E750J	SMD Resistor	0603-75Ω±5%	18	6R14 7R3 7R11 7R15 8R16 8R17 9R10 （9R11） (9R12) 9R29 9R32 9R35 (9R37) 9R38 9R39 9R47 9R48 9R49
01.57.R.2.E101J	SMD Resistor	0603-100Ω±5%	33	3R6 3R7 5R9 7R1 7R6 7R7 8R3 8R4 3R10 3R11 3R21 3R23 5R10 6R16 6R31 6R32 6R39 6R47 6R50 6R49 7R12 8R26 8R28 8R30 8R31 10R48

				10R49 10R53 10R55 10R60 10R61 8R29 8R22
01.57.R.2.E201J	SMD Resistor	0603-200Ω±5%	4	10R7 10R33 10R10 10R34
01.57.R.2.E221J	SMD Resistor	0603-220Ω±5%	1	(8R32)
01.57.R.2.E331J	SMD Resistor	0603-330Ω±5%	2	(8R14)(10R3)
01.57.R.2.E391J	SMD Resistor	0603-390Ω±5%	1	9R56
01.57.R.2.E471J	SMD Resistor	0603-470Ω±5%	2	10R36 10R46
01.57.R.2.E561J	SMD Resistor	0603-560Ω±5%	2	(10R44) (10R45)
01.57.R.2.E102J	SMD Resistor	0603-1KΩ±5%	30	(3R12) 5R15 5R17 5R21 6R20 6R22 (6R24) 6R26 6R27 6R35 6R36 6R38 6R40 6R42 6R43 (6R45) 6R58 7R16 7R20 7R32 (6R46) 8R25 (9R2) 9R3 9R27 9R40 10R47 9R45 9R46 9R52
01.57.R.3.E102J	SMD Resistor	0805-1KΩ±5%	4	10R8 10R11 10R32 10R35
01.57.R.2.E182J	SMD Resistor	0603-1.8KΩ±5%	1	8R24
01.57.R.2.E242J	SMD Resistor	0603-2.4KΩ±5%	2	6R19 (6R60)
01.57.R.2.E472J	SMD Resistor	0603-4.7KΩ±5%	20	(5R1) (5R2) 5R4 7R4 8R1 8R2 8R5 8R7 8R8 8R9 (3R17) (3R18) 5R18 5R19 5R20 5R22 5R23 7R10 7R40 10R62
01.57.R.2.E512J	SMD Resistor	0603-5.1KΩ±5%	4	10R50 10R51 10R52 10R54
01.57.R.2.E562J	SMD Resistor	0603-5.6KΩ±5%	1	8R33
01.57.R.2.E622J	SMD Resistor	0603-6.2KΩ±5%	1	2R4
01.57.R.2.E752J	SMD Resistor	0603-7.5KΩ±5%	2	10R37 10R38

01.57.R.2.E103J	SMD Resistor	0603-10KΩ±5%	36	(3R8) (3R9) 3R13 (4R1) (4R2) 5R6 5R8 (6R21) (6R23) 6R30 6R34 (6R54) (6R55) (7R18) (7R19) 7R37 (9R6) 9R7 9R24 9R25 (9R41) 9R42 (9R43) (9R44) 10R1 10R20 10R39 10R41 5R7 9R50 9R51 9R53 9R54 6R11 6R12 6R13
01.57.R.3.E103J	SMD Resistor	0805-10KΩ±5%	2	10R5 10R19
01.57.R.2.E123J	SMD Resistor	0603-12KΩ±5%	1	8R23
01.57.R.2.E153J	SMD Resistor	0603-15KΩ±5%	2	8R20 6R41
01.57.R.2.E203J	SMD Resistor	0603-20KΩ±5%	2	10R56 10R57
01.57.R.2.E243J	SMD Resistor	0603-24KΩ±5%	1	8R6
01.57.R.2.E333J	SMD Resistor	0603-33KΩ±5%	2	6R56 2R2
01.57.R.3.E393J	SMD Resistor	0805-39KΩ±5%	1	10R25
01.57.R.2.E473J	SMD Resistor	0603-47KΩ±5%	7	3R15 8R21 10R43 2R1 2R3 10R15 10R17
01.57.R.3.E473J	SMD Resistor	0805-47KΩ±5%	1	10R16
01.57.R.2.E683J	SMD Resistor	0603-68KΩ±5%	1	6R28
01.57.R.2.E104J	SMD Resistor	0603-100KΩ±5%	11	6R37 6R44 8R15 9R16 9R18 9R20 9R21 (9R58) (9R57) (9R59) (9R60)
01.57.R.2.E334J	SMD Resistor	0603-330KΩ±5%	1	(6R57)
01.57.R.2.E474J	SMD Resistor	0603-470KΩ±5%	1	(8R38)
01.57.R.2.E824J	SMD Resistor	0603-820KΩ±5%	1	(3R1)
01.57.R.3.E105J	SMD Resistor	0805-1MΩ±5%	2	10R13 10R28
01.57.R.Y.E3015	Resistor	AVLC18S03015	27	5D3 5D4 5D5 7D1 7D2 7D3 (7D4) 7D7 7D8 (7D9) 7D10 7D11 (7D12) (7D13) 7D14 (9D1) (9D2) (9D3) 9D4 9D5 (9D6) (9D7) 9D8 (9D9) (9D10) 9D11 9D12
01.57.R.8.EP2204	Four-in-one net Resistor	0603-22Ω*4 ±5%	4	4RN1 4RN2 4RN3 4RN8

01.57.R.8.EP3304	Four-in-one net Resistor	0603-33Ω*4 ±5%	7	5RN1 5RN2 5RN3 5RN4 5RN5 7RN1 7RN2
01.57.R.8.EP4704	Four-in-one net Resistor	0603-47Ω*4 ±5%	4	4RN4 4RN5 4RN6 4RN7
01.54.CS.2.E5P0N50V	SMD Capacitor	0603-5P NPO± 0.25PF/50V	4	7C2 7C7 7C11 7C12
01.54.CS.2.E120N50V	SMD Capacitor	0603-12P NPO±5%/50V	2	(6C16) (6C17)
01.54.CS.2.E150N50V	SMD Capacitor	0603-15P NPO±5%/50V	6	9C2 9C7 9C11 9C18 9C21 9C24
01.54.CS.2.E200N50V	SMD Capacitor	0603-20P NPO±5%/50V	1	8C17
01.54.CS.2.E220N50V	SMD Capacitor	0603-22P NPO±5%/50V	9	(3C3) (3C7) (3C8) (3C11) (3C12) (3C13) (3C14) (10C34) (10C35)
01.54.CS.2.E270N50V	SMD Capacitor	0603-27P NPO±5%/50V	1	(3C4)
01.54.CS.2.E101N50V	SMD Capacitor	0603-100P NPO±5%/50V	12	(6C1) (6C2) (6C3) (6C4) (6C7) (7C4) (7C9) (5C11) (5CB25) 7C16 (8C23) (8C24)
01.54.CS.2.E151N50V	SMD Capacitor	0603-150P NPO±5%/50V	2	10C37 10C41
01.54.CS.2.E331X50V	SMD Capacitor	0603-330P X7R±10%/50V	7	9C27 9C29 (9C32) 9C33 9C35 9C37 9C39
01.54.CS.3.E331N50V	SMD Capacitor	0805-330P NPO±5%/50V	2	(10C8) (10C28)
01.54.CS.2.E391N50V	SMD Capacitor	0603-390P NPO±5%/50V	1	(8C29)
01.54.CS.3.E471N50V	SMD Capacitor	0805-470P NPO±5%/50V	2	10C13 10C26
01.54.CS.2.E681X50V	SMD Capacitor	0603-680P X7R±10%/50V	2	(9C13) (9C14)
01.54.CS.2.E821X50V	SMD Capacitor	0603-820P X7R±10%/50V	2	10C39 10C43
01.54.CS.2.E102X50V	SMD Capacitor	0603-102 X7R±10%/50V	6	(5C2) (5C5) (5C6) (7C14) (7C15) 8C28
01.54.CS.2.E122X50V	SMD Capacitor	0603-122 X7R±10%/50V	1	2C27
01.54.CS.2.E152X50V	SMD Capacitor	0603-152 X7R±10%/50V	1	(8C11)

01.54.CS.2.E472X50V	SMD Capacitor	0603-472 X7R±10%/50V	3	7C5 9C9 (9C16)
01.54.CS.2.E103X50V	SMD Capacitor	0603-103 X7R±10%/50V	26	7C1 7C3 7C6 7C8 (8C3) 8C8 9C1 9C4 9C6 9C8 (2C24) 5C13 7C10 7C13 8C20 8C22 8C25 8C26 9C10 9C12 9C17 9C19 9C20 9C22 9C23 9C25
01.54.CS.3.E153X50V	SMD Capacitor	0805-153 X7R±10%/50V	2	10C12 10C20
01.54.CS.2.E473Y50V	SMD Capacitor	0603-473 Y5V-20+80%/50V	5	8C9 9C31 9C34 9C36 9C38
01.54.CS.2.E104Y50V	SMD Capacitor	0603-104 Y5V-20+80%/50V	120	(2CB1) (2C2) (2CB3) (2CB4) (2C4) (2CB5) (2C5) (2CB6) (2CB7) (2CB8) (2C8) (2CB9) (2C9) (2CB10) (2C10) (2C11) (2CB11) (2CB12) (2C14) (2C21) (2C25) (2C28) (3CB1) (3CB2) 3C2 (3CB3) (3CB4) (3CB5) (3C5) (3CB6) (3CB7) (3CB9) (3CB10) 3C10 (3CB11) (3CB12) (3CB13) (3CB14) (3CB15) (3CB16) (3CB17) (3CB18) (3CB19) (3CB20) (3CB21) (3CB22) (3CB23) (3CB24) (3CB25) (3CB26) 3CB27 (4CB1) (4CB10) (4CB2) 4CB4 4CB5 4CB6 4CB7 4CB8 (4CB9) (5CB1) (5CB2) (5CB3) (5CB4) (5CB5) (5CB6) (5CB8) (5C8) (5CB9) (5CB10) (5C10) (5CB13)

				(5CB14) (5CB15) (5CB16) (5CB17) (5CB18) (5CB19) (5CB20) (5CB22) (5CB23) (5C9) (5C12) 5CB27 (6C5) (6C6) (6C8) (6C9) 6C10 (6C11) 6C12 (6C14) 6C15 (7CB1) (7C20) 7C21 (8C1) (8C2) (8C4) (8C18) (8C21) (9C3) (9C5) 9C15 (10CB1) (10CB2) (10C2) (10C4) (10C5) (10C19) (10C22) (10C31) (10C32) (9C40) (10C44) 10C45 2C29 2C30 2C31 2C32
01.54.CS.3.E104X50V	SMD Capacitor	0805-104 X7R±10%/50V	3	(10C14) 10C17 (10C21)
01.54.CS.3.E104Y50V	SMD Capacitor	0805-104 Y5V+80-20%/50V	9	10C1 (10C7) (10C11) 10C16 (10C18) 10C23 (10C25) (10C29) (10C30)
01.54.CS.3.E106Y10V	SMD Capacitor	0805-106 Y5V-20+80%/10V	2	5C1 5C4
01.54.CS.2.E224Y50V	SMD Capacitor	0603-224 Y5V-20+80%/50V	1	(8C16)
01.54.CS.2.E225Y10V	SMD Capacitor	0603-225 Y5V-20+80%/10V	4	10C36 10C38 10C40 10C42
01.54.CS.2.E474Y50V	SMD Capacitor	0603-474 Y5V+80-20%/50V	2	(8C15) 8C27
01.54.CS.3.E474X16V	SMD Capacitor	0805-474 X7R±10%/16V	1	10C15
01.54.CS.2.E105Y16V	SMD Capacitor	0603-105 Y5V-20+80%/16V	7	(2C26) 6C13 9C26 9C28 6C18 (9C41) (9C42)
01.13.L.Z.ESA50	SMD ferrite bead	0603-50Ω	18	6FB1 6FB2 6FB3 6FB4 6FB5 6FB6 6FB7 6FB8 6FB9 6FB10 (6FB11) 3FB1 (6FB16) (6FB17)

				7FB5 9L1 9L2 (9L3)
01.13.L.Z.ESB100	SMD ferrite bead	0805-100Ω	14	2FB1 (2FB2) 2FB3 (2FB4) 2FB5 (2FB6) 2FB7 2FB8 (2FB9) 2FB10 2FB11 2FB12 5FB1 6FB12
01.13.L.Z.ESC50	SMD ferrite bead	1206-50Ω	4	7FB1 7FB2 (10L1) (10L2)
01.13.L.L.S.E007	SMD Inductor	0805-10UH	2	10L3 10L4
01.13.L.L.S.E012	SMD Inductor	0805-4.7UH	12	(2L3) (2L4) 5L1 5L2 5L3 5L4 5L5 (5L6) (5L7) 5L8 7L1 7L2
01.13.L.L.S.E295	SMD Inductor	SPI1210QR-5R2 SMD	1	2L7
01.13.L.L.S.E090	Inductor	1210-10UH(NLCV32T-100K-PF)	5	2L1 2L5 4L1 8L7 8L8
01.13.L.L.S.E092	Inductor	1210-22UH ±10% SMD	1	8L2
01.13.L.L.S.E212	Inductor	SLF12575T-220M4R7-PF	2	10L5 10L6
01.13.L.L.S.E093	Inductor	1210-47UH 10%	2	2L2 10L7
01.00.CD.JZ.E47463V	Capacitor	474/63V	4	10C6 10C9 10C24 10C33
01.00.CD.JZ.E68463J	Capacitor	684/63V	2	10C10 10C27
01.13.L.L.D.E025	Inductor	B06015	1	6L1
01.34.CL.D.E10U16VC	Electrolytic capacitor	CD110-10UF/16V 5*11	11	4EC1 6EC2 6EC3 7EC1 7EC2 7EC5 9EC1 9EC2 9EC3 9EC5 9EC6
01.34.CL.D.E22U16VC	Electrolytic capacitor	CD110-22UF/16V 5*11	4	3EC1 3EC2 6EC6
01.34.CL.D.E47U16VC	Electrolytic capacitor	CD110-47UF/16V 5*11	9	6EC1 6EC7 10EC2 10EC3 10EC5 10EC6 10EC8 10EC10 10EC18
01.34.CL.D.EH47U25VD	Electrolytic capacitor	CD288H-47UF/25V 5*12	1	10EC9
01.34.CL.D.E100U16VC	Electrolytic capacitor	CD110-100UF/16V 5*11	16	2EC1 2EC2 2EC3 2EC4 2EC7 4EC2 5EC1 5EC2 8EC1 8EC4 8EC5 10EC15 10EC24 8EC6 10EC19 10EC20

01.34.CL.D.EH100U16VD	Electrolytic capacitor	CD288H-100UF/16V 5*12	2	2EC6 5EC3
01.34.CL.D.E288100U35VD	Electrolytic capacitor	CD288H-100UF/35V 8*12	1	10EC4
01.34.CL.D.E288220U16VD	Electrolytic capacitor	CD288H-220UF/16V 6.3*12	1	8EC2
01.34.CL.D.E470U25VE	Electrolytic capacitor	CD110-470UF/25V 8*14	1	2EC11
01.34.CL.D.E470U35VN	Electrolytic capacitor	CD110-470UF/35V 10*15	1	10EC1
01.34.CL.D.E470U25V	Electrolytic capacitor	470UF/25V 8*20 ±20% 105℃ Low ESR	4	2EC5 2EC10 2EC12 7EC4
01.34.CL.D.E1000U25VG	Electrolytic capacitor	CD288H-1000UF/25V 10*20	2	10EC7 10EC12
01.00.JZ.E27000B	DIP Oscillator	27.000MHZ-49S-22P	1	3Y1
01.00.JZ.E04000	DIP Oscillator	4.000MHZ-49S-22P	1	8Y1
01.00.JZ.E32768F	DIP Oscillator	32.768KHZ 12.5PF±20PPM	1	6Y1
01.41.D.PD.ESR560	Diode	SR560 DIP	1	2D3
01.41.D.PS.ELL4148	Diode	LL4148 SMD	11	D1 D2 3D1 5D1 5D2 7D5 7D6 10D1 10D2 10D3 10D4
01.41.D.PD.EIN4002	Diode	IN4002 DIP	2	4D1 4D2
01.41.D.PS.EMA111	Diode	MA111 SMD	2	3D2 3D3
01.41.D.PS.EBA277	Diode	BA277 SMD	3	8D1 8D2 8D3
01.42.Q.S.E2N3904	Audion	2N3904 SMD	13	5Q1 5Q2 6Q2 6Q3 6Q4 7Q3 (8Q4) 8Q5 8Q6 10Q1 10Q4 10Q5 9Q1
01.42.Q.S.E2N3906	Audion	2N3906 SMD	4	3Q1 6Q1 6Q5 10Q6
01.42.Q.S.E2N7002	Transistor	2N7002 SMD	2	8Q1 8Q2
01.46.IC.E24C02	IC	24C02 SMD	2	5U6 7U1
01.44.IC.S.EA11171V8	IC	AZ1117H-1.8 SMD	2	5U1 2U2
01.44.IC.S.EA11173V3	IC	AZ1117H-3.3 SMD	1	2U1
01.44.IC.S.E1117H	IC	AZ1117H-5.0 SMD	1	8U2
01.46.IC.E8200	IC	MT8200 SMD	1	3U1
01.46.IC.E29LV160BBTC	IC	MX29LV160BBTC-70 SMD	1	4U2
01.46.IC.E24C04	IC	AT24C04N-10SU-2.7 SMD	1	5U2

01.46.IC.E64164	IC	M12L64164A-5 SMD	1	4U1
01.44.IC.S.EV330	IC	FSAV330 SMD	2	7U2 9U2
01.46.IC.E8293	IC	MT8293 SMD	1	5U3
01.46.IC.ECE2836	IC	CE2836 SMD	1	10U2
01.44.IC.S.E0514	IC	RClamp0514M SMD	2	5U5 5U4
01.44.IC.S.E672T	IC	UPA672T SMD	1	5U7
01.44.IC.S.EATMEGA8L	IC	ATMEGA8L SMD	1	6U1
01.44.IC.S.EAZ7808	IC	AZ7808 SMD	1	8U1
01.44.IC.S.ETDA8932	IC	TDA8932 SMD	1	10U1
01.44.IC.S.E9886	IC	TDA9886 SMD	1	8U4
01.46.IC.E24LC16	IC	24LC16 SMD	1	3U2
01.44.IC.S.E433	IC	FSAV433 SMD	1	9U3
01.44.IC.S.1014	IC	AOZ1014 SMD	1	2U3
01.44.IC.S.E4052	IC	CD4052 SMD	1	9U1
01.44.IC.S.E4558	IC	NJM4558 SMD	1	10U3
01.00.ZJ.LBQ.E025	Filter	AF389A1D DIP	1	8U3
01.00.ZJ.LBQ.E026	Filter	VF389A1D DIP	1	8U5
01.31.GPT.E078	Tuner	TDQ-6PD/T124CWADC	1	8TUN1
01.40.CON.DPH.E035	Jack	PH-8A	1	2CON2
01.40.CON.DPH.E020	Jack	PH-4A	2	3CON1 7CON4
01.40.CON.DPH.E053	Jack	PH-3A	1	2CON1
01.40.CON.DTJ.E008	Jack	TJC3-4A	1	10CON1
01.40.CON.DCZ.E564	Linker	VH DIP	2	10CON2 10CON3
01.40.CON.DCZ.E276	Jack	1775245-2 SMD	1	5CON1
01.40.CON.DCZ.E273	Jack	2.0*20A DIP	1	6CON1
01.40.CON.S13.AY.E004	SMD Jack	1.25-30A	1	7CON3
01.40.CON.S13.AY.E028	SMD Jack	1.25-15A	2	9CON3 6CON2
01.40.CON.S13.AY.E027	SMD Jack	1.25-12A	1	9CON4
01.40.CON.S13.AY1.003	Jack	1.25-13A DIP	1	9CON7
01.40.CON.DCZ.E007	VGA Jack	EV-015FC DIP	1	7CON1
01.40.CON.DCZ.E001	Jack	DASW-8 DIP	1	9CON5
01.40.CON.DCZ.E066	Double row (earphone)Jack	CKX-3.5-02K DIP	1	9CON2
01.40.CON.DCZ.E167	Same coreJack	AV2-8.4-13/PB	2	7CON2 9CON6
01.40.CON.DCZ.E347	Same coreJack	AV5-8.4-13/PB	1	9CON1

01.37.PCB.2.E3827C2	Circuit board	Main board 3827C-V2.0	1	
Bom NO.	Part NO.	Part Name	Qty.	
LTD06T-3828C01	02.22.LTD06T-3828C01	Receiver board	1	
Part NO.	Name	Spec.	Qty.	Loca.
01.57.R.2.E100J	SMD Resistor	0603-10Ω±5%	1	R1
01.57.R.2.E202J	SMD Resistor	0603-2KΩ±5%	1	R2
01.54.CS.2.E104Y50V	SMD Capacitor	0603-104 Y5V-20+80%/50V	1	C1
01.34.CL.D.E10U16VB	Electrolytic capacitor	CD11X-10UF/16V 4*7	1	EC1
01.57.R.Y.E3015	Resistor	AVLC18S03015	1	D1
01.41.D.FD.E3RB	LBD	Φ3 DIP	1	LED1
01.42.Q.S.E2N3904	Audion	2N3904 SMD	1	Q1
01.44.IC.D.E0038B	IC	HS0038B DIP	1	U1
01.40.CON.S13.AY.E009	SMD Jack	1.25-5A	1	CON2
01.37.PCB.2.E3828C2	Circuit board	Remote control receiver board 3828C-V2.0	1	
Bom NO.	Part NO.	Part Name	Qty.	
LTV07I-5105C01	02.14.LTV07I5105C01	Interface board	1	
Part NO.	Name	Spec.	Qty.	Loca.
01.57.R.2.E101J	SMD Resistor	0603-100Ω±5%	6	R14 R22 R28 R29 R31 R33
01.57.R.2.E102J	SMD Resistor	0603-1KΩ±5%	12	R1 R4 R5 R8 R9 R10 R11 R12 R13 R17 R32 R34
01.57.R.2.E242J	SMD Resistor	0603-2.4KΩ±5%	2	R30 R16
01.57.R.2.E103J	SMD Resistor	0603-10KΩ±5%	6	R2 R3 R15 R23 R35 R36
01.57.R.2.E104J	SMD Resistor	0603-100KΩ±5%	8	R18 R19 R20 R21 R24 R25 R26 R27

01.57.R.Y.E3015	Resistor	AVLC18S03015	24	ESD1 ESD2 ESD3 ESD4 ESD5 ESD6 ESD7 ESD8 ESD9 ESD10 ESD11 ESD12 ESD13 ESD14 ESD15 ESD16 ESD17 ESD18 ESD19 ESD20 ESD21 ESD22 ESD23 ESD24
01.54.CS.2.E331X50V	SMD Capacitor	0603-330P X7R±10%/50V	16	C1 C2 C3 C4 C5 C6 C7 C8 C10 C11 C12 C13 C14 C15 C16 C17
01.54.CS.2.E104Y50V	SMD Capacitor	0603-104 Y5V-20+80%/50V	2	C9 C19
01.34.CL.D.E10U16VC	Electrolytic capacitor	CD110-10UF/16V 5*11	1	CE1
01.34.CL.D.E330U25VE	Electrolytic capacitor	CD110-330UF/25V 8*14	1	C18
01.13.L.Z.ESB50	SMD ferrite bead	0805-50Ω	13	FB1 FB2 FB3 FB4 FB5 FB6 FB7 FB8 FB9 FB10 FB11 FB12 FB13
01.42.Q.S.E2N3904	Audion	2N3904 SMD	6	Q1 Q2 Q3 Q4 Q5 Q6
01.44.IC.S.EV330	IC	FSAV330 SMD	1	U1
01.44.IC.S.E4052	IC	CD4052 SMD	1	U2
01.40.CON.DCZ.E273	Jack	2.0*20A DIP	1	CN2
01.40.CON.DCZ.E274	Jack	HDD44F	2	CN1 CN3
01.37.PCB.2.E5105C2	Circuit board	Interface board 5105C-V2.0	1	
Bom NO.	Part NO.	Part Name	Qty.	
LTD06K-3829C01	02.15.LTD06K3829C01	Keystoke board	1	
Part NO.	Name	Spec.	Qty.	Loca.
01.57.R.Y.E3015	Resistor	AVLC18S03015	10	D1 D2 D3 D4 D5 D6 D7 D8 D9 D10
01.39.SW.QC.ED665	Touch switch	6*6*5	10	S1 S2 S3 S4 S5 S6 S7 S8 S9 S10
01.40.CON.S13.AY.E028	SMD Jack	1.25-15A	1	J1

01.40.CON.S13.AY.E024	SMD Jack	1.25-5A	1	J2
01.37.PCB.2.E3829C2	Circuit board	Keystoke board3829C-V2.0	1	
Bom NO.	Part NO.	Part Name	Qty.	
LTD06I-3830C01	02.14.LTD06I3830C01	Connecting board	1	
Part NO.	Name	Spec.	Qty.	Loca.
01.57.R.2.E000J	SMD Resistor	0603-0Ω ±5%	1	(9R52)
01.57.R.2.E100J	SMD Resistor	0603-10Ω±5%	2	9R34 9R39
01.57.R.2.E750J	SMD Resistor	0603-75Ω±5%	3	9R36 9R42 9R45
01.57.R.2.E101J	SMD Resistor	0603-100Ω±5%	2	9R33 9R35
01.57.R.2.E102J	SMD Resistor	0603-1KΩ±5%	5	9R48 9R49 9R56 9R58 9R65
01.57.R.2.E242J	SMD Resistor	0603-2.4KΩ±5%	1	9R43
01.57.R.2.E103J	SMD Resistor	0603-10KΩ±5%	8	9R51 9R60 9R61 9R62 9R63 9R68 9R69 9R70
01.57.R.2.E333J	SMD Resistor	0603-33KΩ±5%	2	9R47 9R55
01.57.R.Y.E3015	Resistor	AVLC18S03015	19	9D12 9D13 9D14 9D15 9D16 9D18 9D19 9D20 9D21 9D22 9D23 9D24 9D25 9D26 9D27 9D28 9D29 9D30 9D31
01.54.CS.2.E200N50V	SMD Capacitor	0603-20P NPO±5%/50V	18	9C1 9C2 9C3 9C4 9C5 9C6 9C7 9C8 9C9 9C10 9C11 9C12 9C13 9C14 9C15 9C16 9C17 9C18
01.54.CS.2.E331X50V	SMD Capacitor	0603-330P X7R±10%/50V	1	9C32
01.34.CL.D.E10U16VC	Electrolytic capacitor	CD110-10UF/16V 5*11	4	9EC10 9EC11 9EC12 9EC13
01.34.CL.D.E47U16VC	Electrolytic capacitor	CD110-47UF/16V 5*11	1	9EC9
01.42.Q.S.E2N3906	Audion	2N3906 SMD	2	9Q1 9Q2
01.40.CON.DCZ.E331	SCARTJack	CS112 DIP	2	9CON5 9CON6
01.40.CON.S13.AY.E027	SMD Jack	1.25-12A	1	9CON1

01.40.CON.S13.AY.E028	SMD Jack	1.25-15A	1	9CON2
01.37.PCB.2.E3830C3	Circuit board	Connecting board3830C-V3.0	1	