SERVICE MANUAL

8T84 CHASSIS

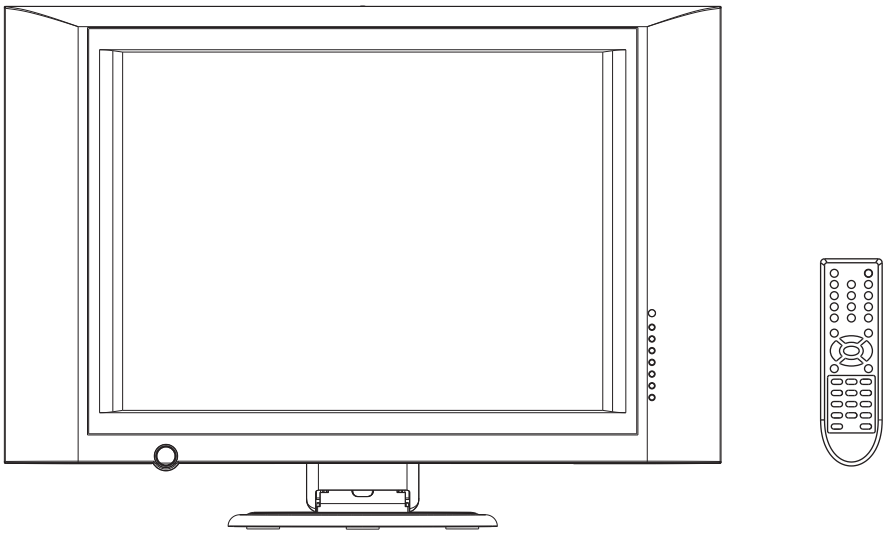

Design and specifications are subject to change without prior notice.
(ONLY REFERRENCE)

ENGINEER BY:_____ CHECKED BY:_____ PPROVED BY: _____

Contents

Contents---------- 2
Technical specification---------- 3-8
Chassis Block Diagram----------9
Service Adjustments ----------10-11
Operation Instructions----------12-26
Circuit Diagram---------- 27

TECHNICAL SPECIFICATION

1.General Specification

No	Item	Specification	Remark
1.	System	1)PAL BG/DK/I 2)SECAM BG/DK/L/L' 3)NTSC M *	
2.	Channel	1) VHF : K1～S7 CATV : S8～S38 UHF : S39～DS57	
3.	Input Voltage	AC 110 ~ 240 V, 50/60Hz	
4.	Market	EUROPE, East ASIAN, Australian	
5.	Panel Size(inch)	15"/17''/20''	
6.	Tuning System	FS	
7.	Operating Environment	1)Temp : 0 ~ 40 deg 2)Humidity : 40 ~ 85 %	
8.	Storage Environment	3)Temp : -20 ~ 50 deg 4)Humidity : 30 ~ 90 %	

2. Feature and Function

No	Item	Specification	Remark
1.	TELETEXT	10page	
2.	REMOCON	RC5 Code	
3.	FULL SCART Input	1	
4.	Component input	1	Y Cb Cr/Y Pb Pr (480i/p, 720p, 1080i)
5.	VGA	1	
6.	2 Carrier Stereo	YES	
7.	NICAM Stereo	Y	
8.	2 Carrier Dual	Y	
9.	NICAM Dual	Y	
10.	SSC (Split Screen) Mode	Option	DUAL TXT PAGE
11.	Headphone	Y	
12.	16:9 Mode	Y	
13.	Noise Reduction	Y	
14.	Progressive Scan(CTI)	Option	
15.	Comb Filter	Y	
16.	Tone control (Bass/ Treble/ Balance)	Y	
17.	Customer LOGO	Y	
18.	5 Band Equalizer	Y	

PDF 文件使用 "pdfFactory" 试用版本创建 www.fineprint.com.cn

No	Item	Specification	Remark
19.	Clock(Remind timer / Wake timer)	Y	
20.	Child Lock	Y	
21.	4 Picture/Sound Mode	Y	
22.	OSD Language	English/French/Deutsch	Others can be added
23.	TXT Language	East/west/pan European/Cyrillic/Greek	
24.	ATS	Y	

3. Safety and Regulation

No	Item	Min	Typ	Max	Unit	Remark
1.	Force Stability – Incline Plane Tip Test				deg	
2.	Force Stability – Level Tip Test				N	
3.	Isolation Gap, AC-AC/ AC-DC	3			mm	
4.	Isolation Gap, insulation- no insulation	6			mm	
5.	Power Consumption, Max		40	75	W	15''/20'' IEC 65
6.	Power Consumption, Stand by		1	3	W	
7.	Power Consumption, Current harmonics					IEC 107-1
8.	Dielectric Voltage	3			kV	at 10 mA, for 1 minutes
9.	Isolation Resistance	4			MΩ	
10.	Leakage Current			0.7	mApp	
11.	Power Cord Captivity	15			kg	
12.	Flammability – Back Cover			V0		UL94
13.	Sharp Edge	none				
14.	UL Compliance					
15.	FCC Compliance					
16.	CDRH Radiation Compliance					
17.	CSA Compliance					
18.	CEB Compliance					
19.	CE Compliance		Y			
20.	CB Compliance		Y			

4. Video

No	Item	Min	Typ	Max	Unit	Remark
1.	Linearity Distortion, Vertical				%	
2.	Linearity Distortion, Horizontal				%	
3.	Trapezoidal Distortion, Vertical				%	
4.	Trapezoidal Distortion, Horizontal				%	
5.	Over Scan, Vertical				%	
6.	Over Scan, Horizontal				%	

PDF 文件使用 "pdfFactory" 试用版本创建 www.fineprint.com.cn

No	Item	Min	Typ	Max	Unit	Remark
7.	Brightness, Maximum	100			cd/m2	
8.	Video Noise Limited Sensitivity(@S/N=30db) VHF			48	dBm	
9.	Video Noise Limited Sensitivity(@S/N=30db) UHF			51	dBm	
10.	Selectivity −1.5M	35			dB	
11.	Selectivity +8M	40			dB	
12.	Tuning Range	-0.75		1	MHz	
13.	Resolution Horizontal	300			Lines	
14.	Resolution Vertical	400			Lines	
15.						

5. Chroma

No	Item	Min	Typ	Max	Unit	Remark
1.	Purity (mislanding)				um	
2.	Convergence				mm	
3.	White Balance, X axis	0.280	0.288	0.296		
4.	White Balance, Y axis	0.297	0.295	0.303		
5.	White Balance, Color Temperature		9000		kdeg	9000kdeg(288,295) 13000kdeg(268,273) 9300(281,311) 6500(313,329)
6.	Color Sensitivity			45	dB	
7.	Color Burst Lock-in Range	+/-300			Hz	
8.	Color Killer Sensitivity			-80	dBm	

6. Audio

No	Item	Min	Typ	Max	Unit	Remark
1.	Audio Noise Limited Sensitivity, VHF-L			42	dBm	
2.	Audio Noise Limited Sensitivity, VHF-L			42	dBm	
3.	Audio Noise Limited Sensitivity, UHF			48	dBm	
4.	Buzz (S/N Ratio)	40			dB	
5.	Min. Volume Hum			20	mV	
6.	Distortion			10	%	
7.	Audio Output, L/R,at 7 % THD			4	W	
8.	Audio Output, Center		X		W	
9.	Audio Output, Woofer		X		W	

PDF 文件使用 "pdfFactory" 试用版本创建 www.fineprint.com.cn

No	Item	Min	Typ	Max	Unit	Remark
10.	Stereo Separation	25			dB	
11.	Speaker Impedance		8or4		ohm	
12.	Speaker Power Rating			4W	W	

7. Panel

No	Item	15.1''	17.1''	20.1''	Unit	Remark
1.	Aspect ratio	4:3	16:9	4:3		
2.	Resolution	1024 x768	1280 x768	640 x480		@60Hz
3.	Pixel Pitch	0.30 x 0.30	0.291 x0.291	0.6375 x0.6375	mm	
4.	No. of Colors	16.2 M	16.7M	16.7M		
5.	Brightness	400	450	450	cd/m2	Center point
6.	Contrast Ratio	350	400	350		
7.	Viewing angle X axis left	75	88	88	degree	CR>5
8.	Viewing angle X axis right	75	88	88	degree	CR>5
9.	Viewing angle Y axis up	50	88	88	degree	CR>5
10.	Viewing angle Y axis down	75	88	88	degree	CR>5
11.	Life time	50000	50000	50000	hours	
12.	Response time(rise)	7	12	15	ms	
13.	Response time(decay)	18	13	15	ms	

8. External Interface

No	Item	Min	Typ	Max	Unit	Remark
1.	Video Input Level	0.85	1	1.15	Vpp	EN-50049
2.	Video Input Frequency Response	4.5			MHz	
3.	Video Input S/N	40			dB	
4.	Audio Input Level	0.4	0.5	0.6	Vrms	
5.	Audio Input Frequency Response	0.1		7	kHz	
6.	Audio Input S/N	40			dB	

PDF 文件使用 "pdfFactory" 试用版本创建 www.fineprint.com.cn

No	Item	Min	Typ	Max	Unit	Remark
7.	Audio Input Distortion			2	%	
8.	Audio Input Dynamic Range	2			V	
9.	Video Output Level	0.85	1	1.15	Vpp	EN-50049
10.	Video Output Frequency Response	3.8			MHz	
11.	Video Output S/N	40			dB	
12.	Audio Output Level	0.4	0.5	0.6	Vrms	
13.	Audio Output Frequency Response	0.1		7	kHz	
14.	Audio Output S/N	40			dB	
15.	Audio Output Distortion			2	%	
16.	Video Input Level, R/G/B				Vpp	
17.	Video Input Level, Component(Y, P^B, P^R)	0.6	0.7	0.8	Vpp	75 ohm
18.	RGB Input Resolution, Vertical				pixel	
19.	RGB Input Resolution, Horizontal				pixel	
20.	RGB Input Horizontal Frequency				kHz	
21.	RGB Input Frame Rate				Hz	

9. The others

No	Item	Min	Typ	Max	Unit	Remark
1.	Search Sensitivity	-95	-90	-85	dBm	
2.	Heating Time			7	sec	
3.	Soft Ware Functionality Test					SMI Specification
4.	REMOCON Working Sensitivity, Straight	8			m	
5.	REMOCON Working Sensitivity, T/B/L/R	6			m	30 degree
6.	Closed Caption Sensitivity				dBm	
7.	Teletext Sensitivity			-70	dBm	
8.	Resonance of unit (Sweep freq : 50 ~ 1000)	None				
9.	Clock, real time gain or loss (sec per day)				sec	
10.						

10. Customer Menu Setup (as shipped condition

No	Item	Min	Typ	Max	Unit	Remark
1.	PSM	Movies				
2.	SSM	Music				
3.	Volume	30				
4.	Mute	Off				
5.	Input Mode	RF				
6.	Customer Menu Language	English				customer define

PDF 文件使用 "pdfFactory" 试用版本创建 www.fineprint.com.cn

No	Item	Min	Typ	Max	Unit	Remark
7.	Avl	On				
8.	Sleep Timer	Off				
9.	Auto Sleep	Off				
10.	Blue Back	ON				
11.	Surround	On				
12.	TXT	Off				
13.						

11. Reliability

No	Item	Min	Typ	Max	Unit	Remark
1.	ESD	4			kV	IEC-1000-4-2
2.	EFT/Burst	2			kV	IEC-1000-4-4
3.	Surge Immunity	4			kV	IEC-1000-4--5
4.	Voltage Dip Test, 10ms	30			%	IEC-1000-4-11
5.	Voltage Dip Test, 100ms	100			%	IEC-1000-4—11
6.	Laser arcing Test				times	each Polarization
7.	CST					
8.	Abnormal Test					
9.	Operation Temperature	0	25	45	deg	
10.	Operation Humidity	10		90	%	
11.	Storage Temperature	-20		60	deg	
12.	MTBF (Confidence Level : 90 %)	10000			hours	
13.	Ship Test					

PDF 文件使用 "pdfFactory" 试用版本创建 www.fineprint.com.cn

Chassis Block Diagram

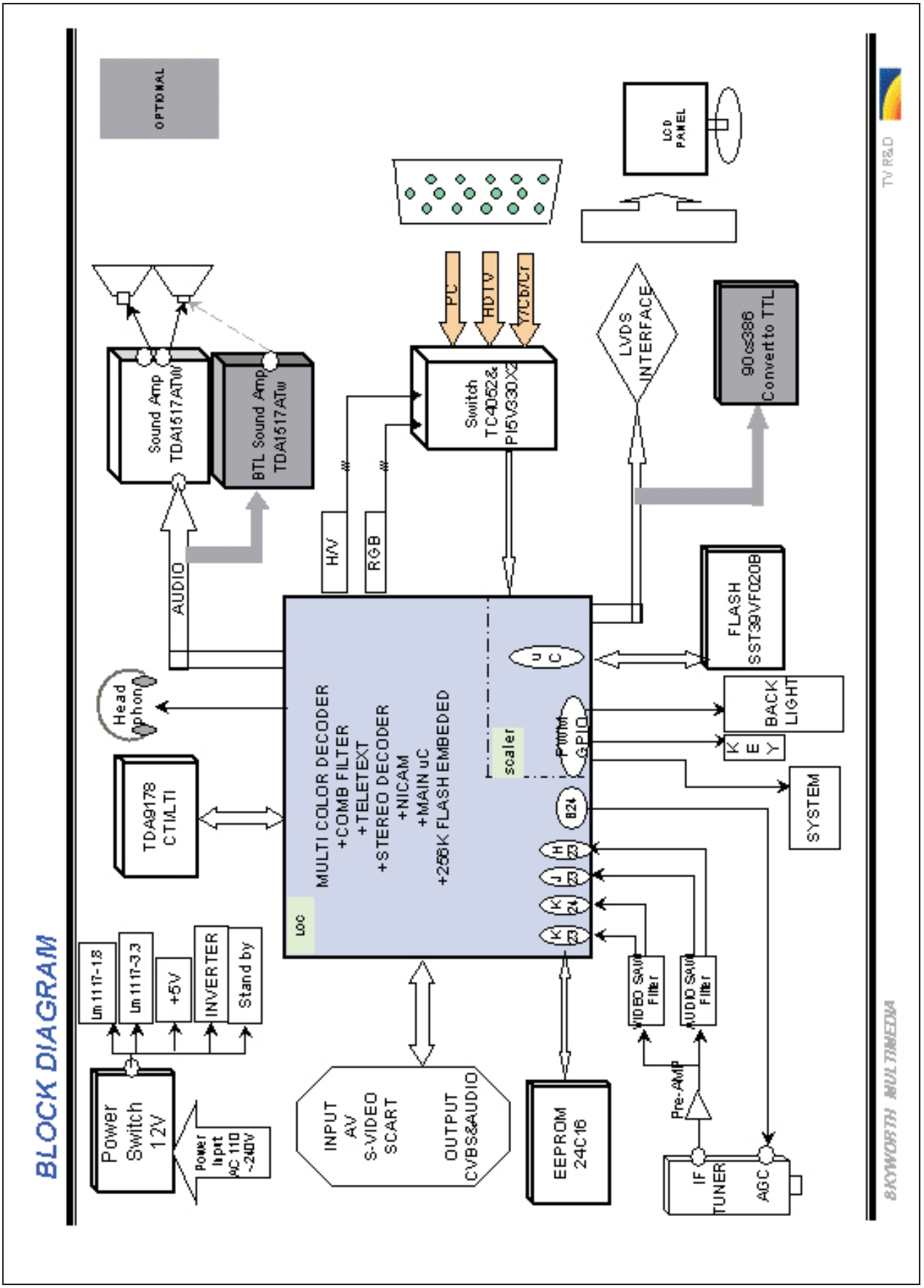

Service Adjustments

1. Preface

This Adjust Manual is only used for 8T84 LCD TV.

2. Specify

2.1 This TV operates onDC supply ,so through AC- DC ADAPTER to socket at the back of the TV.The power is +12VDC.

2.2 Insert the mains plug in the wall socket having a mains voltage of 100~240V AC, 50/60Hz.

2.3 Working condition: if no show clearly, work in the following state:.

1) Tempurature : 25℃ ± 5℃
2) Relative humidity : 60% ± 20%

2.4 The receive set should be adjusted after working 20 minutes if no prior notice.

2.5 Equipments used

--- Multimeter

Max Input Current: Up to 1 A/Max input Voltage:500Vdc

Measurement Range: 10Mvr~100Vdc/Accuracy :0.03%

--- Oscilloscope:

Frequency band: up to 20M/input impedance: up to 1

Input Capacitance: Less than 30Pf/ Max Input Voltage:250V

--- PC

XGA(1024X768@ 60Hz)

2.6 Signal

60~80dBu standard color bar from Pm 5418 or from factory central signal generator is used if no prior notice.

3. Software

Notice

software using in this chassis is stored in FLASH ROM. The flash ROM is re-writable.

Procedure relates to functions. Difference function chassis should be written differen -ce edition procedure.

4. Chassis check

4.1 The chassis should be clear and no short or open circuit, no missing components or wrong components insertion.

4.2 Check the input and output pins of 12V,5V,3.3V,1.8V, REGULATOR IC (The C step of 8360,3430,8330,7096,7097), CONFIRM NO SHORT CIRC -UIT TO Gnd.

4.3 Connect the chassis to LCD panel on the adjust equipment and power on, confirm 5V,3.3V, from the regulators are OK.

4.4. Confirm OSD is OK,blue ground appears is no signal.

4.5 Confirm remote control functions and all local keys control function are OK. The set can enter standby states and exit to normal work status.

4.6 Confirm search function, store all factory signal, confirm picture and sound of any pattern are Ok.

4.7 RF-AGC adjustment

Inputting the color signal of 70dB(VHF-H wave band),pressing the factory menu botton to enter factory menu,adjusting RFAGC value to AGC voltage=2.7V which is in one pin of tuner.

4.8 Confirm sound and picture of SCART is ok at input and output,the sound and picture of YUV and PC are ok at input.

4.9 After complete assembly set TV to snow dot mode to aging line.

5. Complete check

5.1 Confirm H,V repeat rate and liner are OK in every state picture of TV,AV PC and so on.

5.2 Check white balance(adjustment)

5.3 Check picture and sound in all the TV mode are OK. Check picture and sound under the weak and strong signal; check picture in low and high voltage power input mode.

5.4 Confirm NICAM function is OK.

5.5 Confirm Teletext function is OK.

5.6 Confirm sound and picture of SCART is ok at input and output,the sound and picture of YUV and PC are ok at input.

5.7 Confirm remote control and local control functions are OK,we can set the TV to standby mode then normal mode to confirm if the set can work properly.

6. Final setting

6.1 PICTURE :**MOVIES**

6.2 VOLUME :30

6.3 BALANCE :0

6.4 CCD : OFF

6.5 SLEEP TIME :0

SETUP

Insert The Batteries

1. Remove the battery cover by pressing it and sliding it down.
2. Insert the two 1.5V (AAA size) batteries making sure the polarity (+ or -) of the batteries matches the polarity marks inside the unit.
3. Replace the battery cover by sliding it in until you hear a click sound.

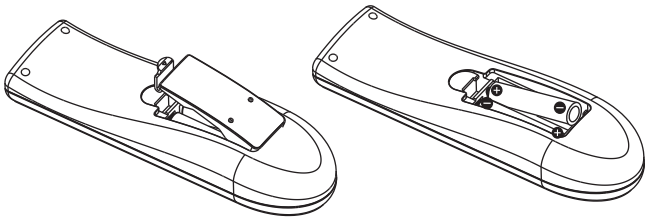

Precautions when using batteries

- Do not use old and new batteries together.
- Do not use different types of batteries (for example, Manganese and Alkaline batteries)together.
- Note that there are chargeable and non-chargeable batteries. Do not attempt to charge non-chargeable batteries.
- Remove the batteries from the remote control unit if you do not intend to use the unit for a long time.

Precautions when using the remote control unit

- Do not drop the remote control unit.
- Do not subject the remote control unit to physical shocks.
- Keep the remote control unit dry. Wetting it may cause the unit to malfunction.
- Replace the batteries with new ones when operation of the unit deteriorates.

FUNCTIONAL PARTS

Front View of TV Set

1. Remote Sensor
2. Disp Button
3. TV/AV Button
4. Main Menu Button
5. CH.+Button
6. CH.- Button
7. VOL.+Button
8. VOL.- Button
9. Power Indicator/Stand by Button
10. Speakers

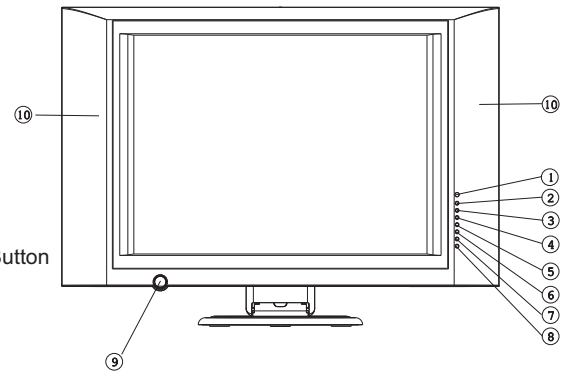

To turn the TV power ON

Put the TV set on the correct place, then connect the DC plug of the AC-DC adaptor to the DC 12V socket at the back of the TV set. Connect the adaptor main cord to the wall outlet, then the power indicator turns red and the TV set is at Standby Mode. At Standby Mode, if Standby Button is pressed the power indicator will change to yellow. It takes a few seconds before the picture appears.

To turn the TV power OFF

Press the Standby button to make the TV set in Standby Mode, then disconnect the power plug from the wall outlet.

NOTE

- If TV is powered on without signal received and NO operation is performed for about 8 minutes continuously, the TV set will enter standby mode automatically. For any inputs other than TV, the TV set will not enter standby mode automatically without users instruction.
- If you are not going to use this TV set for a long time, switch off the set using the power switch on the TV set and disconnect the power plug from the wall outlet.

Rear View of TV Set

1. Headphone
2. Antenna Input Socket (75Ohm)
3. SCART
4. AV Audio Right In
5. AV Audio Left In
6. Component Input
7. VGA Input
8. DC Input

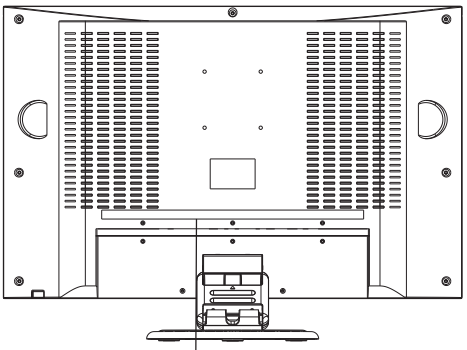

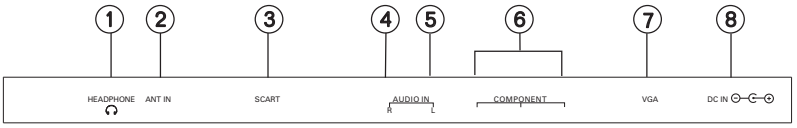

NOTE

- Precautions when connecting to other equipment.
- When using external equipment with this TV set, please read the instruction manual of the external equipment.
- Switch off all power supplies to the equipment and TV set before connection.
- Always ensure that the input and output terminals are correctly connected.

Operation Instructions

Remote Control Unit

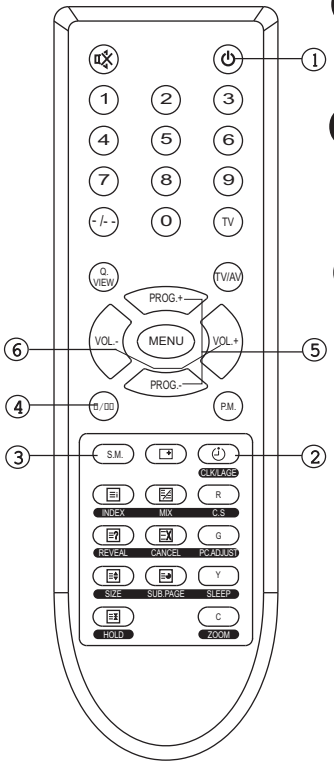

1 POWER ON (⏻) button

Press this button to switch from standby to Power On mode.

2 SLEEP( ) button

Press this button to set the sleep timer.

When the preset length of time has passed, the TV set enters standby mode.

3 SOUND MODE SELECTION (S.M.)

Press this button to select one of four sound effects with wrap-arround.

4 STEREO/BILINGUAL SOUND(/) button (option)

When stereo program is received, press this button to select STEREO or MONO.

When bilingual program is received, press this button to select DUAL-1, DUAL-2 or MONO.

Mode	Description
STEREO	Stereo mode.
MONO	Mono mode.
DUAL-1	Multi-sound channel for language 1.
DUAL-2	Multi-sound channel for language 2.

When the symbols of DUAL and STEREO change yellow, it means TV input signal is FM; When the symbols of them change red, it means TV input signal is NICAM.

5 PROGRAM UP PROG.+ / DOWN PROG.- buttons

Press these buttons to select channels in ascending or descending order.

6 VOLUME UP VOL+ / DOWN VOL- buttons

Press these buttons to adjust the volume level up or down.

Remote Control Unit

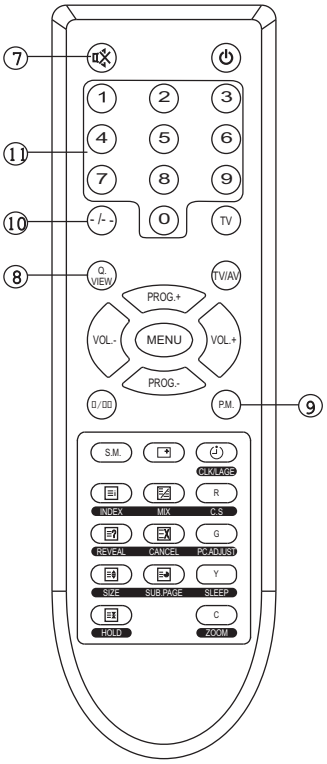

7 **MUTE(🔇)** button

Press this button to mute or restore sound.

8 **QUICK VIEW** button

Press this button to return to the previously viewed program.

9 **PICTURE MODE(P.M.)** button

Press this button to select the preset one of the five picture mode with wraparound.

PERSONAL → STANDARD → DYNAMIC → MILD → RICH → PERSONAL

Picture Mode	Description
PERSONAL	User preset picture mode.
STANDARD	Middle contrast and middle brightness level.
DYNAMIC	Highest contrast and High brightness level.
MILD	Low contrast and low brightness level.
RICH	High contrast and Highest brightness level.

10 **DIGITAL** Button

This TV allows you to select channels from 0 to 99.

Press this button to select one-digit, two-digit or three-digit channels input options.

To select a one-digit channel (e.g. Channel 8), press this --/--- button to change channel selection to "-" on screen display and press the "8" button only.

To select a two-digit channel (e.g. Channel 28), press this --/--- button to change channel selection to "--" on screen display and press "2" and "8" buttons.

To select a three-digit channel (e.g. Channel 128), press this --/--- button to change channel selection to "---" on screen display and press "1", "2" and "8" buttons.

11 **CHANNEL SELECTION** buttons

Press the number buttons to select a channel.

Remote Control Unit

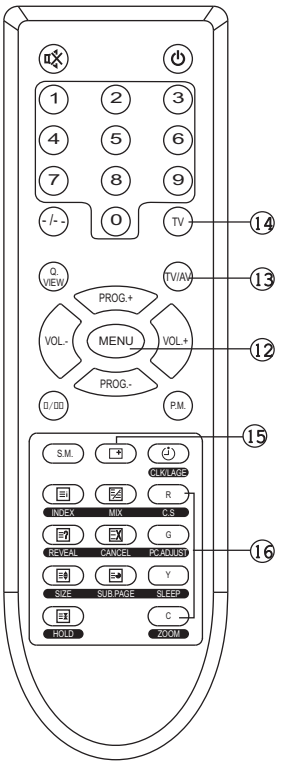

12 MENU button

Press this button to enter the menu screens for various optional adjustable settings.

13 TV/AV button

Press this button to switch among TV broadcast, AV input program and other source. With wraparound.

TV → SCART
↑ ↓
PC ← COMPONENT

14 TV button

Press the button to return TV state from Teletext or from other source to enter the TV mode.(e.g. HD to TV).

15 DISP(⊡) button

Press this button to display the settings on the screen. (e.g. Channel number for TV input, sound mode, colour system)

16 REDEFINE FUNCTION

R. In TV mode, press this button to change the colour system.
G. In PC mode, press this button to adjust the screen to the best station.
Y. Press this button to select a sleep time.
C. Press this button to change the picture size.

TELETEXT OPERATIONS

For models with Teletext function only.

This page shows the function of the buttons on the remote control unit in Teletext mode.

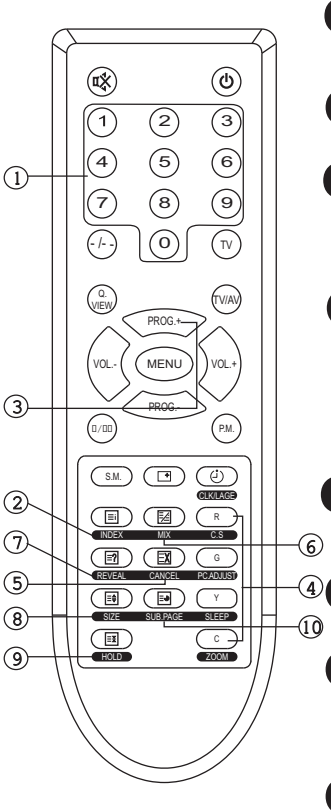

1 PAGE NUMBER SELECTION buttons

Press the number buttons to select a Teletext page number.

2 INDEX button

Press this button to enter the Teletext mode.

3 TELETEXT PAGE UP PROG.+ **/ DOWN** PROG.- buttons

Press these buttons to increase or decrease the Teletext page number.

4 COLOUR buttons

When entering teletext, press these hot keys to response the corresponding colour actions which displayed on screen.
These four buttons have some redefine functions outside the Teletext mode (e.g.CS,PC.ADJUST, SLEEP, ZOOM)

5 CANCEL button

Press this button to appear the TV signal on the background.

6 MIX button

Press this button to close the teletext background.

7 REVEAL button

Press this button to reveal the hidden information for some Teletext pages (e.g. answers to puzzles or riddles). Press again to hide the information.

8 SIZE button

Press this button to change the Teletext size.

9 HOLD button

Press this button to hold the Teletext page on display to prevent the page from changing.
Press again to release the hold state.

10 SUB.PAGE button

Subcode mod, gives, the possibility to select certain subcode pages of a teletext page.

MENU SCREENS

This TV set allows you to adjust general settings by selecting from the menu screens.

Menu button

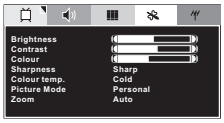

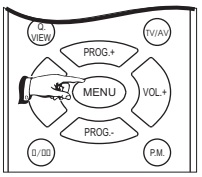

Press this button to display main menu, including Picture, Sound, Overview, Features, Installation items. You can select them by pressing the VOL+/- buttons, and enter the submenu by pressing PROG+/- buttons.

Picture menu

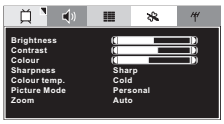

Enter Picture menu, you can select Brightness, Contrast, Colour, Sharpness, Colour temp, Picture Mode and Zoom items by pressing **PROG+/-** Buttons.

1.Brightness

Press the **VOL+/-** button to lighten/darken the picture.

2.Contrast

Press the **VOL+/-** button to increase/decrease the contrast of the picture.

3.Colour

Press the **VOL+/-** button to increase/decrease the colour saturation.

4.Sharpness

Press the button to sharpen or soften the picture.
The choices are "Sharp", "Sharpest", "Auto", "Softest", "Soft", "Normal".

5.Colour temp.

Press the button to select a suitable colour temperature to display.
The choices are "Warm", "Normal", "Cold".

6.Picture Mode

Press the button to select the next picture preset setting with wrap around and set the values brightness, colour, contrast and sharpness.

8.Zoom

Press the button to adapt the picture size to the received picture.

The choices are "Auto", "Normal", "Expand", "Compress", "Amaronap" with wrap arround.

Press MENU to switch the menu on/off.

Sound menu

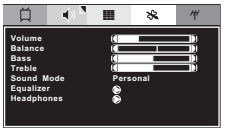

Enter Sound menu, you can select Volume, Balance, Bass, Treble, AVL, Surround, Sound Mode, Equalizer and Head phones items by pressing **PROG+/-** Buttons.

1.Volume

Press the **VOL+** or **VOL-** button to adjust the sound volume.

2.Balance

Press the **VOL+** or **VOL-** button to adjust to the left to right sound channel volume.

3.Bass

Press the **VOL+** or **VOL-** button to adjust the bass boost value.

4.Treble

Press the **VOL+** or **VOL-** button to adjust the high frequency signal value.

5.Sound Mode

Press the button to obtain special soundeffects.
The choices are "Personal", "Speech", "Music" and "Theatre" with wrap arround .

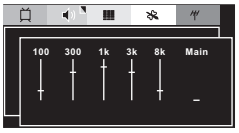

8.Equalizer

A tone control system designed to compensate for frequency distortion in audio systems.

Enter Equalizer ,you can select 100HZ,300HZ,1KHZ,3KHZ And 8KHZ items by pressing **PROG+/-** Buttons and change the corresponding value of volume by pressing **VOL +/-** Buttons.

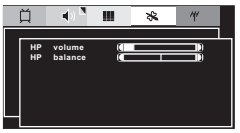

9.Headphones

Enter Headphones, you can select Hp volume or Hp balance items by pressing **PROG+/-** Buttons.
Press the **VOL+/-** Buttons to adjust the Headphones volume.
Press the **VOL+/-** Buttons to adjust the left to right sound channel volume.

Press MENU to switch the menu on/off.

Program number and name menu

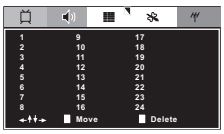

Enter Program menu, you can select any number that you expect by pressing **PROG+/-** and **VOL+/-** and every number delegates corresponding channel.

1.Move button

The Green key on the RC (Remote control)will activate this function.
The first time it will select the program, which will be moved.
The text of the button is "Select".
The second time will move the previous selected program to the current position. The text of the button is " Mode ".
Any key can interrupt this action before the insert action is initiated. The interruption will reset the move action but will not leave the menu except for the Menu key.

2.Delete button

The Red key on the RC will activate this function.
The current selected program will be deleted.

Press MENU to switch the menu off.

Features menu

Enter Features menu, you can select Language, Country, Child lock, Timers, Teletext lang.,Teletext E/W and RT Clock items by pressing **PROG+/-** Buttons.

1.Language

Change the user interfuse language in one out of 3 languages ("English", "French" and "German")with wraparound.

2.Country

Select the country which ATS use to sort the program.

3.Child lock

Enter Child lock, you can select "Lock" or "Lock code" items by pressing **PROG+/-** Buttons.
The child lock function allows users to prevent their children from watching unsuitable programs. There is an overall chile lock mechanism, which the user can enable or disable. Besides, each program can be protected by the child lock function individually. Some menus are also protected by the child lock function.
The same code must be applied to unlock the screen.
If the correct code has been entered, then the screen will be unlocked. The video and audio will be de-muted and the program will be visible and audible.

NOTE: The default lock code is 0000.
If forget the user code, the skeleton key in 4711.

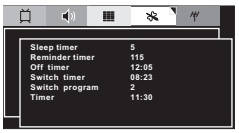

4.Timers

The user-controlled timers are the Sleep timer, Reminder timer, Off timer, Switch timer, switch program and timer.

1)Set Sleep timer
Set the Sleep timer value (in minutes) with a maximum of 120 minutes. The sleep timer can be set to any value of the following sequence: Off - 120minutes with a resolution of 5minutes. When this function is enabled, Display Sleep timer in the last 60 secretary before expiration.

2)Set Reminder timer
The set Reminder timer function allows users to set the Reminder timer with a resolution of 5 min and with a maximum of 120 minutes.

3)Set Off timer
Set the Off timer value (in hours:minutes). When the Real-time Clock is disabled the entered Off time is relative, meaning that the event is generated when the entered time has counted down to 0. When enabled, the absolute time is entered, which means that the event is generated when the entered Off time equals the current time.
The set Off timer function allows users to set the Off timer in the 12 hours format HH:MM AM/PM or the 24 hours format HH:MM.

4)Set Switch timer
Set the Switch timer value (in hours:minutes). When the Real-time Clock is disabled the entered Switch time is relative, meaning that the action is invoked when the entered time has counted down to 0. When enabled, the absolute time is entered, which means that the action is invoked when the entered Switch time equals the current time.

5)Set Switch program
Set the program to switch to when the Switch timer expires

6)Set Time
Set the time for the Real-time Clock in the 12 hours format HH:MM AM/PM or in the 24 hours format HH:MM.

NOTE: When the main power is removed, the RT clock will be reset to 1200AM.

5.Teletext lang.

The choices are "Pan European", "Cyrillic" and "Greek".

6.Teletext E/W

The choices are "East" and "West".

7.RT Clock

Enter Time, you can select "Clock" or "Time" items by pressing **PROG+/-** Buttons and Clock is setted 24 Hrs.

Press MENU to switch the menu off.

Installation menu

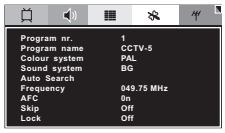

Enter Installation menu, you can select Program nr., Program name, Colour system, Sound system, Auto Search, Frequency, AFC, Skip and Lock items by pressing **PROG+/-** Buttons.

1.Program nr.

Press this button to find next/previous unskipped program or AV soruce.

2.Program name

You can denominate any channel you enjoy by pressing **VOL+/-** and **PROG+/-** Buttons.

3.Colour system

Press the button to select a new colour standard value in TV.

The choices are "PAL", "SECAM", "SECAM-L/L' " and "Auto".

4.Sound system

Press the button to select a new sound standard value in TV.

The choices are "BG", "I", "DK", "L/L' " and "Auto".

TV work in gear must the sound system correspond with the colour system. The relator between them is following:

PAL - BG, DK, I

SECAM - BG, DK

SECAM - L/L'

5.Auto Search

The auto search action takes care of program tuning, storing and retrieving program information. In case of secam L/L' the auto search processing goes twice. When the maximum program number(99) is stored autostore is cancelled. When ATS is enabled in Feature menu setting, the programs will be sort.(see Feature menu section)

6.Frequency

Select a frequency between minimum and Maximum frequency(115025mHZ to 863.25mHZ) by the digtal Buttons and **VOL+/-** Buttons.
Press the VOL+/- Buttons to search the next or previous channel manually.

7.AFC

Automatic frequency control. Once a transmitter is tuned, the system will follow the signal by means of" automatic following" .

8.Skip

Press the skip to enable or disable the selected program from being tuned to by pressing **VOL+/-** Buttons.
The choices are " on" and " off" .

9.Lock

You can select" on" state to lock the channel you expect by pressing **VOL +/-** Buttons when the Child Lock selection is enabled in features menu.

Press MENU to switch the menu off.

Other sources

SCART state

SCART menu

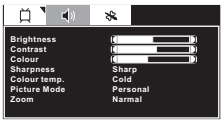

Press the TV/AV Button to select the SCART source or plug in the scart to swith automaticly.
In SCART state, there are 3 geneal menus(Picture, Sound, Feature) supported all function s are the same as in TV mode.

COMPONENT menu

In component state, there are 3 geneal menus(Picture, Sound, Feature) supported all functions are the same as in TV mode.

PC menu

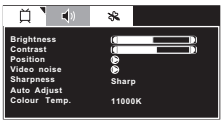

When entering the PC mode, select the Picture menu, you can select Brightness, Contrast, Position, Video noise, Sharpness, Auto Adjust and Colour Temp. Items by pressing **PROG+/-** Buttons.

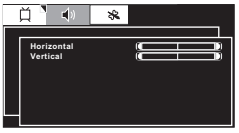

Position

Select the Position sub menu, you can select Horizontal or Vertical items by pressing **PROG+/-** Buttons.

The Position menu allows control of vertical and horizontal position of the picture on the display.

Recommend: Don't changed theses values after auto adjust at best.

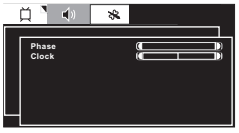

Video noise

Select the Video noise sub menu, you can select Phase or Clock items by pressing **PROG+/-** Buttons.
The Video noise menu allows control of sampling phase and clock to reduce visible video noise.

Recommend: Don't changed theses values after auto adjust at best.

Auto Adjust

Start the auto-adjust procedure to automatically determine the values for horizontal position, horizontal length, vertical position, vertical length, phase adjust and clock adjust to the best status.

Colour temp.

Press the button to adjust the best visual effect of picture.
The choices are 11000k, 9300k, 8500k, 7300k, 6500k, 5500k.

Brightness, Contrast, Sharpness functions are the same as functions in TV.

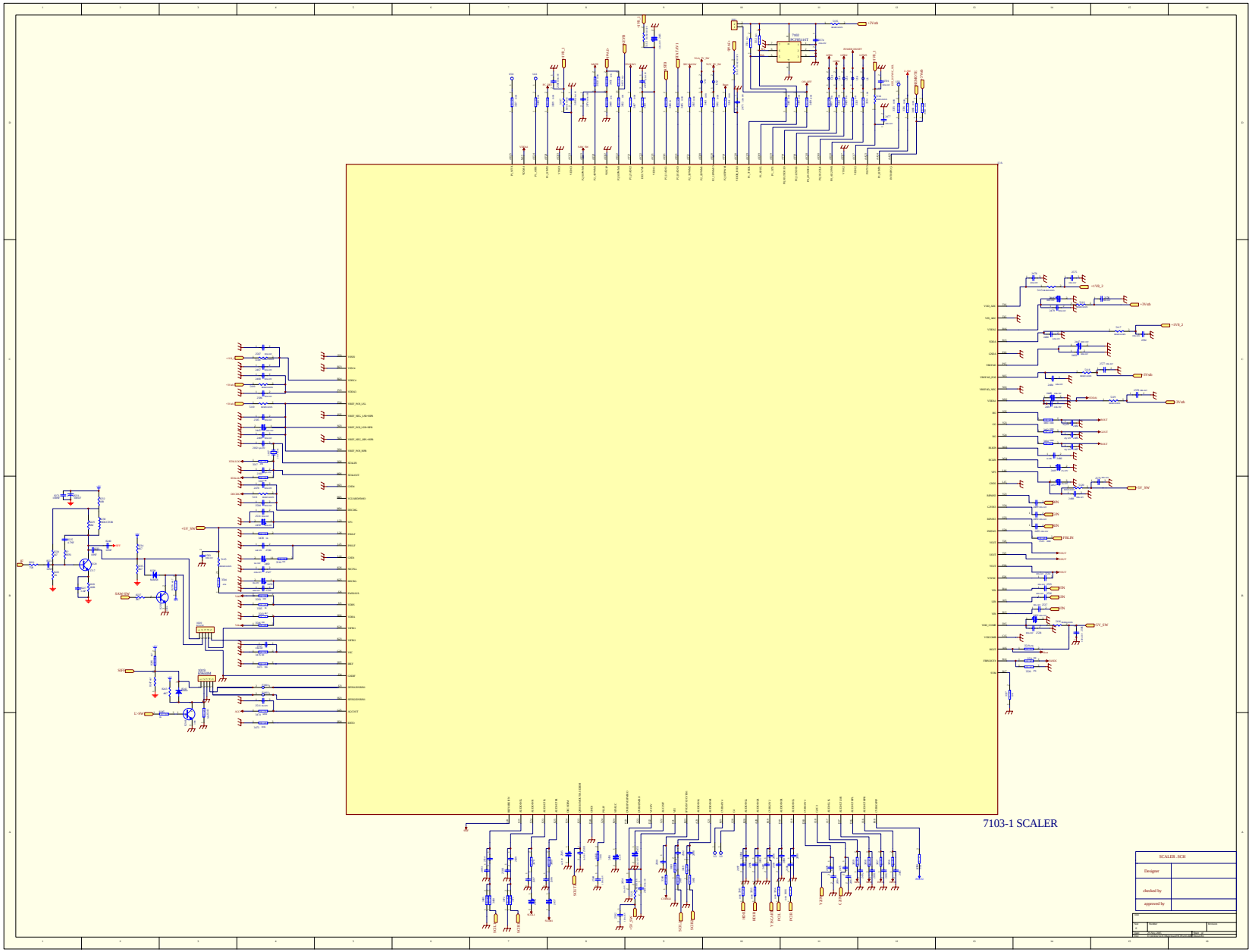
7103-1 SCALER
SCALER .SCH
Designer
checked by
approved by

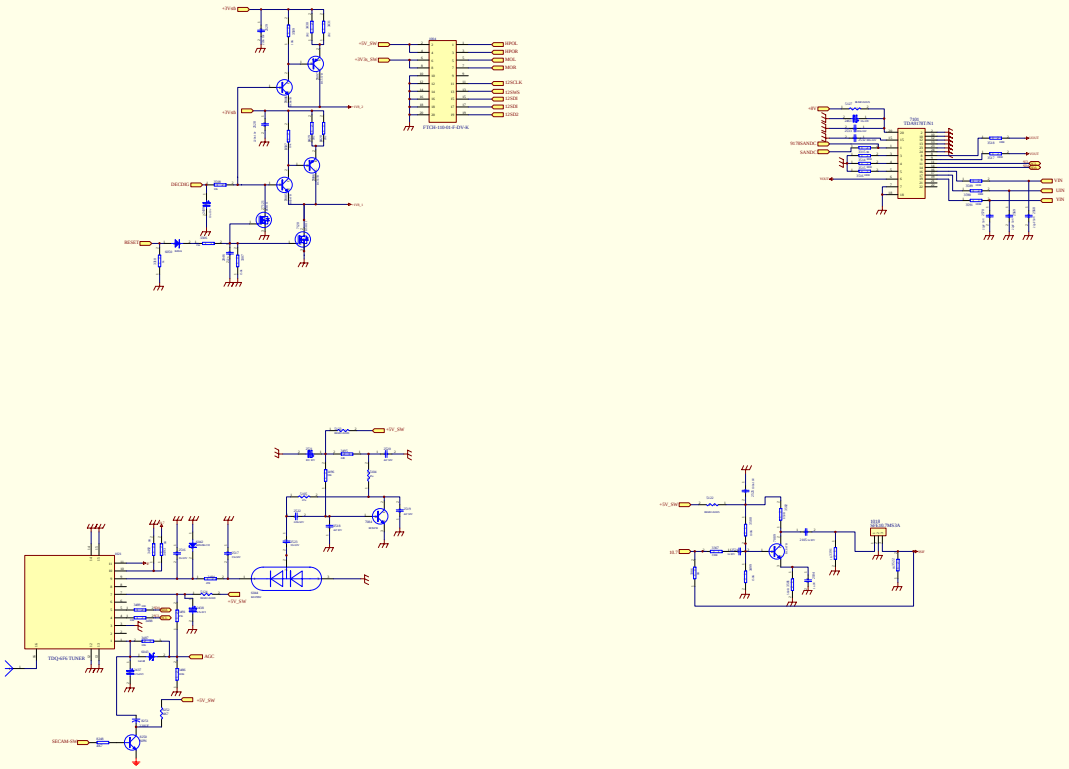

TUNER_SCH	
Designer	
checked by	
approved by	

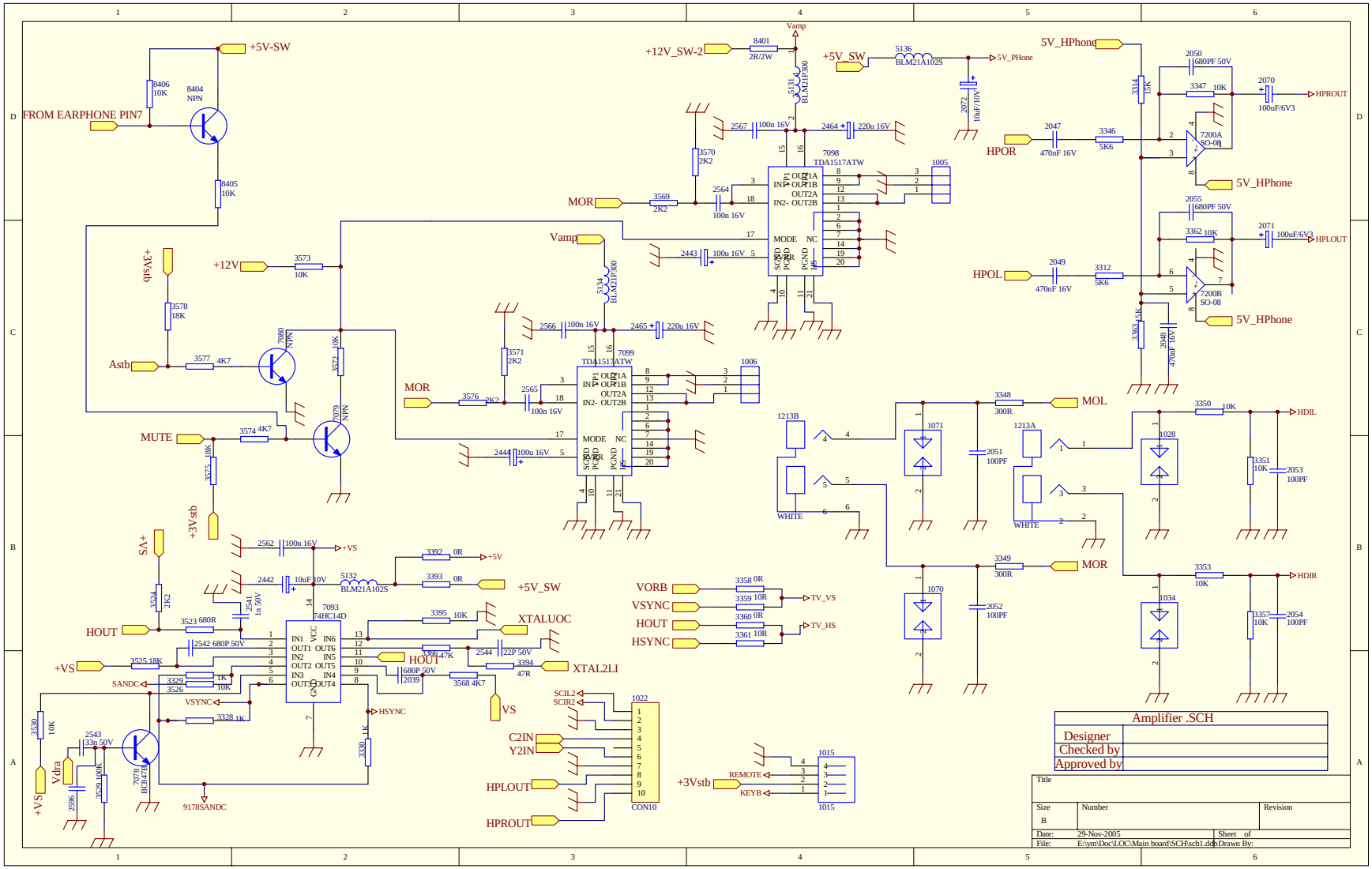
+5V-SW
FROM EARPHONE PIN7
8404 NPN
8406 10K
8405 10K
+5Vstb
3578 18K
Astb
3577 4K7
7080 NPN
3572 10K
7079 NPN
MUTE
3574 4K7
3575 10K
+3Vstb
+12V
3573 10K
S/A+
3524 2K2
HOUT
3523 680R
+VS
3525 18K
SANDC
3329 1K
3526 10K
VSYNC
3328 1K
3530 10K
Vdra
2543 33n 50V
2596
3529 100K
7078 BC847B
9178SANDC
2562 100n 16V
2442 10uF 10V
2541 1n 50V
5132 BLM21A102S
7093 74HC14D
VCC
IN1 OUT1
IN2 OUT2
IN3 OUT3
IN6 OUT6
IN5 OUT5
IN4 OUT4
GND
3392 0R
3393 0R
+5V
+5V_SW
3395 10K
XTALUOC
3366 47K
HOUT
2544 22P 50V
3394 47R
XTAL2LI
680P 50V
2039
3568 4K7
VS
HSYNC
3330 1K
+12V_SW-2
8401 2R/2W
Vamp
5131 BLM21P300
2567 100n 16V
2464 220u 16V
3570 2K2
MOR
3569 2K2
2564 100n 16V
7098 TDA1517ATW
IN1+ OUT1A
IN1- OUT1B
OUT2A
IN2- OUT2B
MODE NC
SGND PGND
PGND PGND
1005
2443 100u 16V
5134 BLM21P300
2566 100n 16V
2465 220u 16V
3571 2K2
7099 TDA1517ATW
1006
3576 2K2
2565 100n 16V
2444 100u 16V
+5V_SW
5136 BLM21A102S
5V_PHone
2072 10uF/10V
HPOR
2047 470nF 16V
3346 5K6
HPOL
2049 470nF 16V
3312 5K6
5V_HPhone
3314 15K
2050 680PF 50V
3347 10K
2070 100uF/6V3
HPROUT
7200A SO-08
2055 680PF 50V
3362 10K
2071 100uF/6V3
HPLOUT
7200B SO-08
3363 5K
2048 470nF 16V
1213B
WHITE
1213A
WHITE
1071
1070
3348 300R
3349 300R
MOL
MOR
2051 100PF
2052 100PF
1028
1034
3350 10K
3353 10K
HDIL
HDIR
3351 10K
3357 10K
2053 100PF
2054 100PF
VORB
VSYNC
HOUT
HSYNC
3358 0R
3359 10R
3360 0R
3361 10R
TV_VS
TV_HS
SCIL2
SCIR2
C2IN
Y2IN
HPLOUT
HPROUT
1022
CON10
+3Vstb
REMOTE
KEYB
1015
Amplifier .SCH
Designer
Checked by
Approved by
Title
Size
B
Number
Revision
Date: 29-Nov-2005
Sheet of
File: E:\ym\Doc\LOC\Main board\SCH\sch1.ddb
Drawn By:

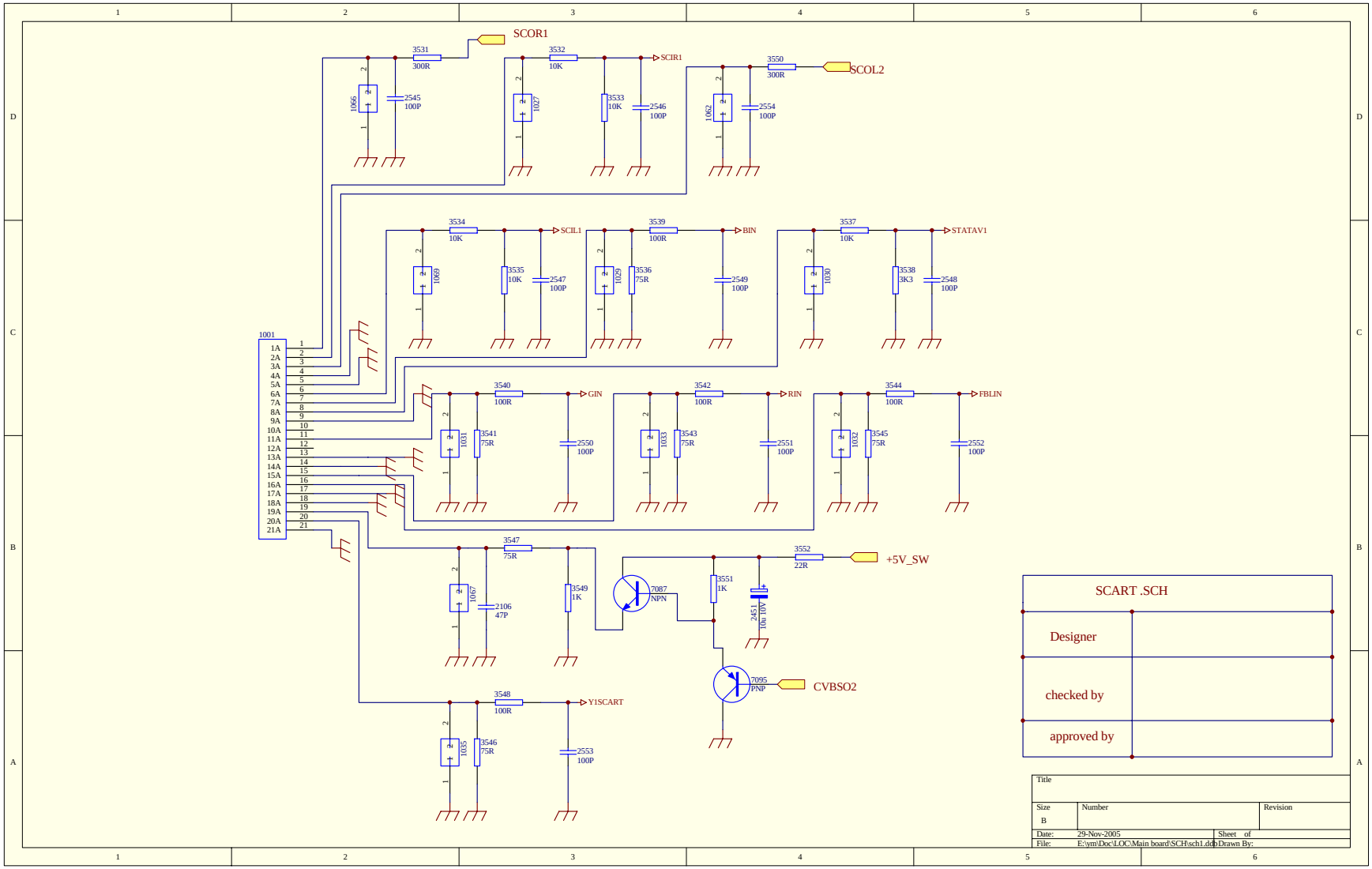
SCOR1
3531
300R
1066
2545
100P
3532
10K
SCIR1
1027
3533
10K
2546
100P
3550
300R
SCOL2
1062
2554
100P
3534
10K
SCIL1
1069
3535
10K
2547
100P
3539
100R
BIN
1029
3536
75R
2549
100P
3537
10K
STATAV1
1030
3538
3K3
2548
100P
1001
1A
2A
3A
4A
5A
6A
7A
8A
9A
10A
11A
12A
13A
14A
15A
16A
17A
18A
19A
20A
21A
3540
100R
GIN
1031
3541
75R
2550
100P
3542
100R
RIN
1033
3543
75R
2551
100P
3544
100R
FBLIN
1032
3545
75R
2552
100P
3547
75R
1067
2106
47P
3549
1K
7087
NPN
3551
1K
2451
10u 10V
3552
22R
+5V_SW
7095
PNP
CVBSO2
3548
100R
Y1SCART
1035
3546
75R
2553
100P
SCART .SCH
Designer
checked by
approved by
Title
Size
B
Number
Revision
Date:
29-Nov-2005
Sheet of
File:
E:\ym\Doc\LOC\Main board\SCH\sch1.ddb
Drawn By:

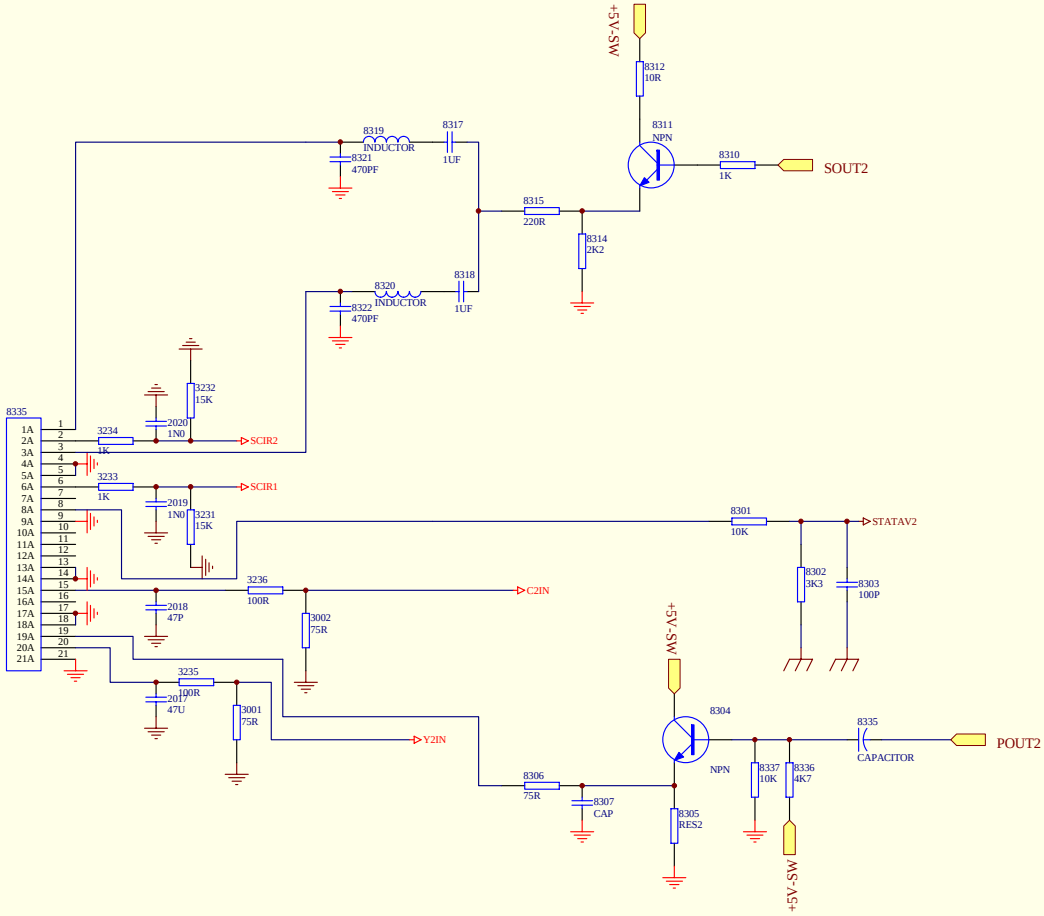

SCART .SCH

Designer

checked by

approved by

Title		
Size B	Number	Revision
Date: 29-Nov-2005	Sheet of	
File: E:\ym\Doc\LOC\Main board\SCH\sch1.ddb	Drawn By:	

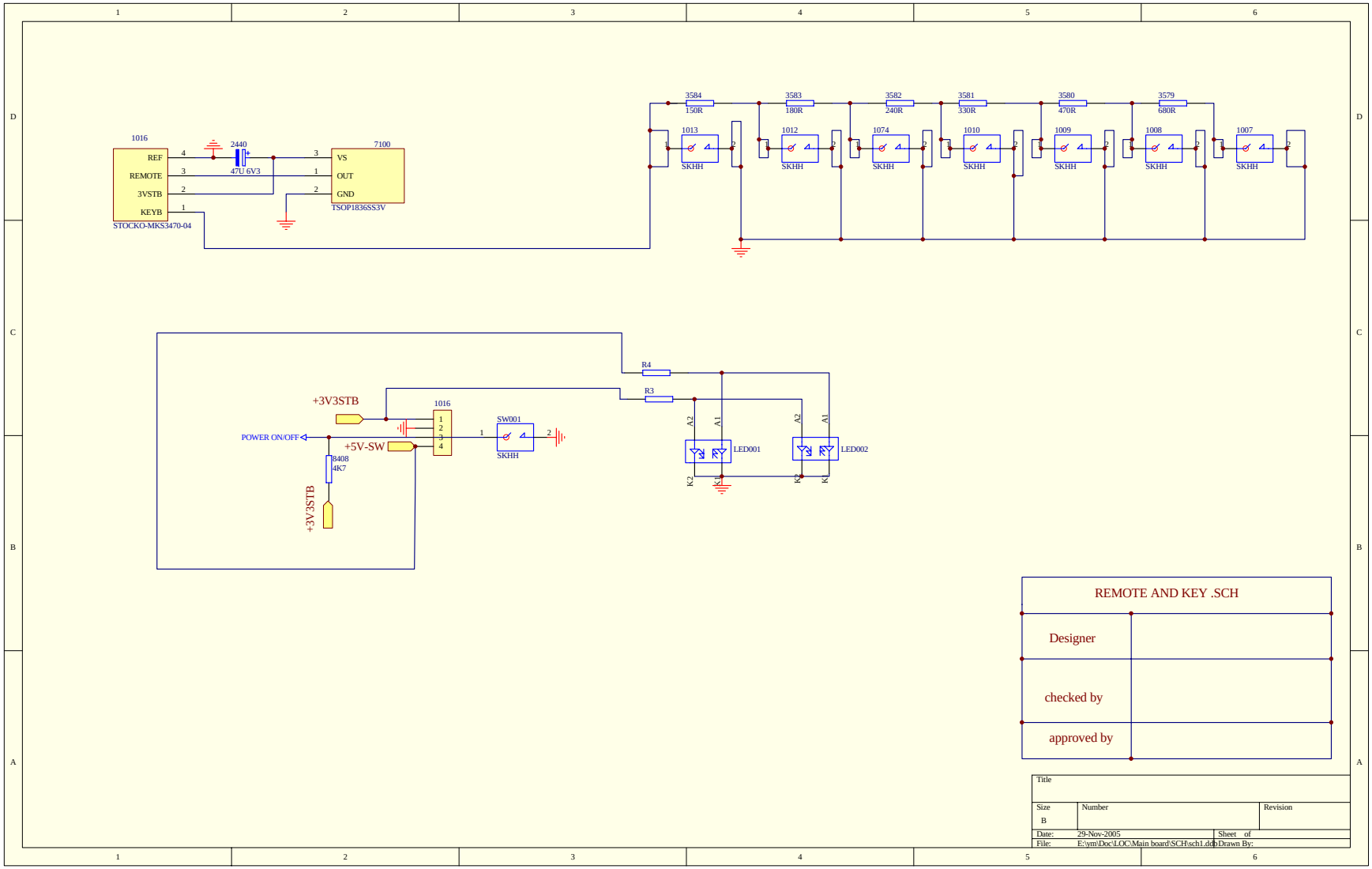
1016
REF
REMOTE
3VSTB
KEYB
STOCKO-MKS3470-04
2440
47U 6V3
7100
VS
OUT
GND
TSOP1836SS3V
3584
150R
3583
180R
3582
240R
3581
330R
3580
470R
3579
680R
1013
1012
1074
1010
1009
1008
1007
SKHH
R4
R3
+3V3STB
POWER ON/OFF
+5V-SW
R408
4K7
+3V3STB
SW001
LED001
LED002
A2
A1
K2
K1
REMOTE AND KEY .SCH
Designer
checked by
approved by
Title
Size
B
Number
Revision
Date:
29-Nov-2005
Sheet of
File:
E:\ym\Doc\LOC\Main board\SCH\sch1.ddb
Drawn By:

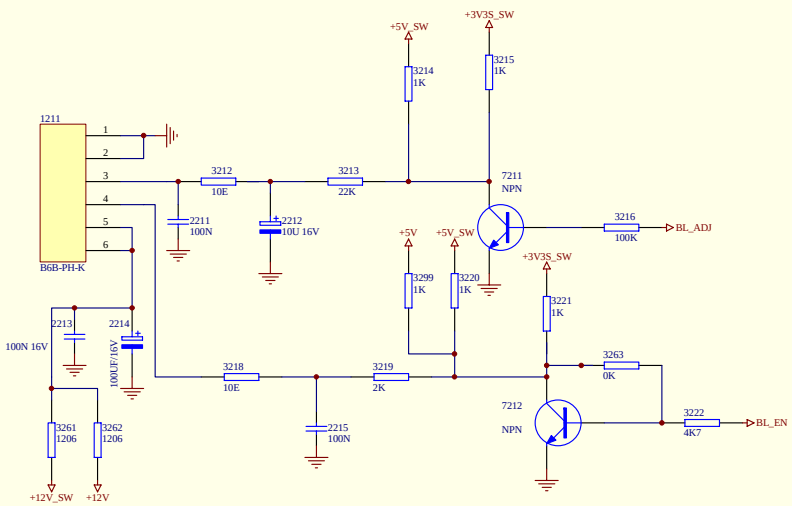

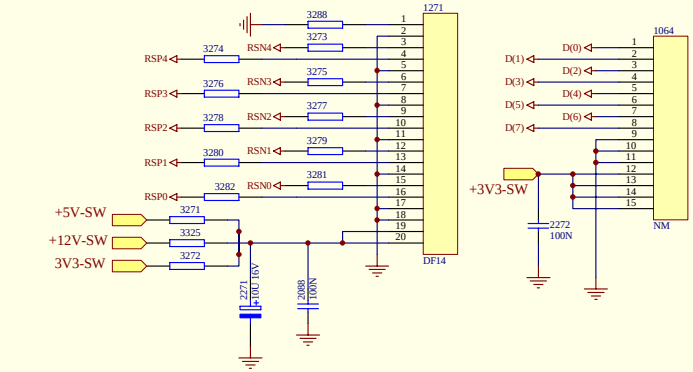

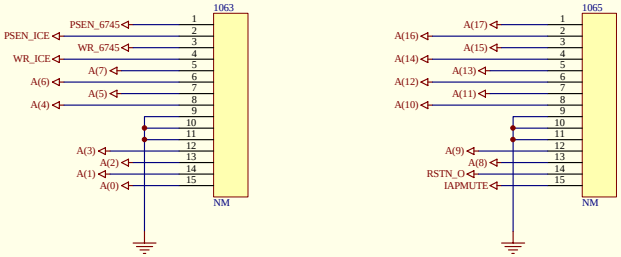

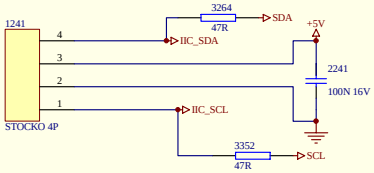

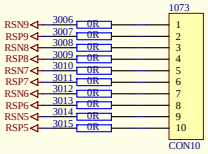

SCALER .SCH

Designer

checked by

approved by

Title		
Size B	Number	Revision
Date: 29-Nov-2005	Sheet of	
File: E:\ym\Doc\LOC\Main board\SCH\sch1.ddb	Drawn By:	

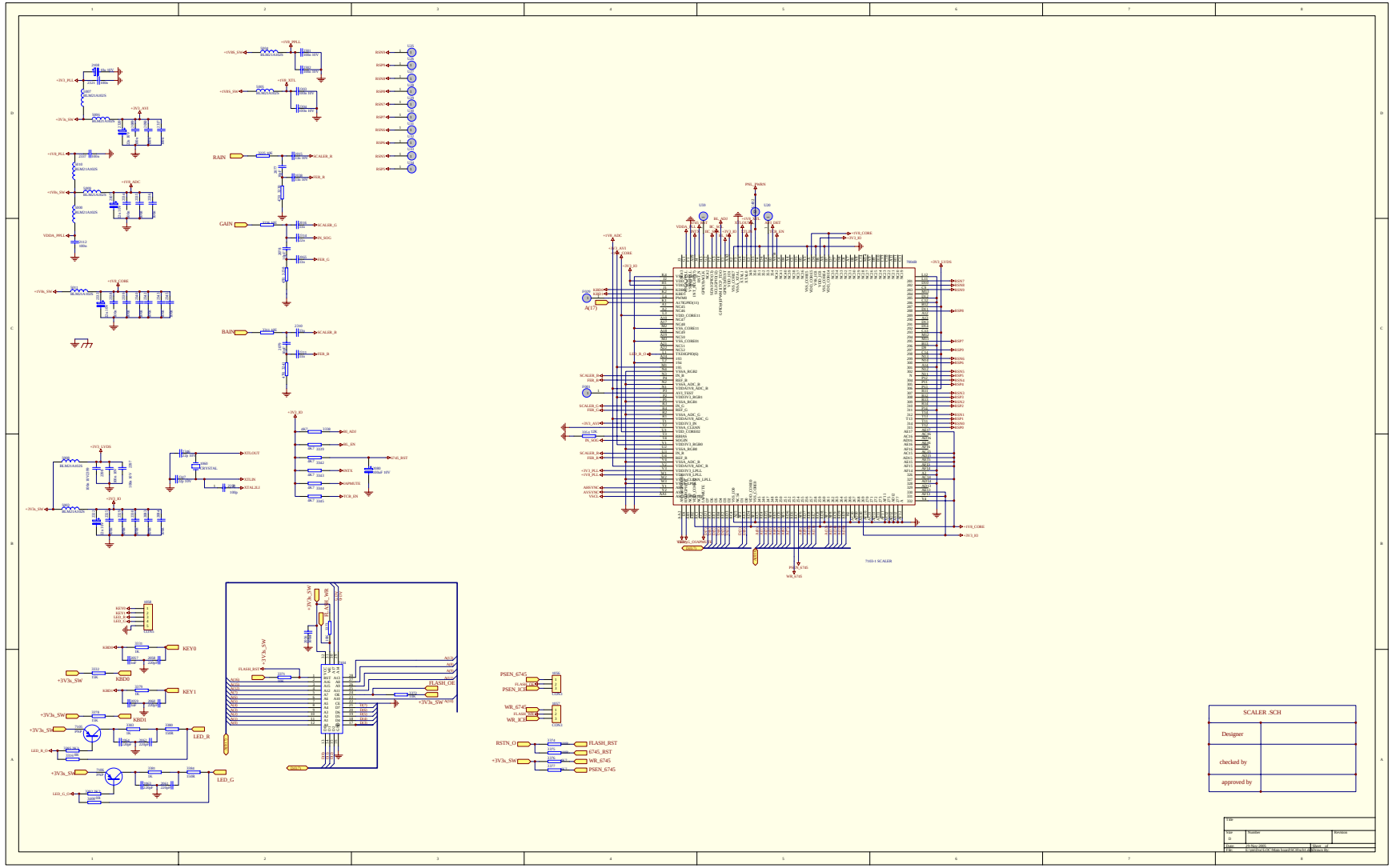
RAIN
GAIN
BAIN
KEY0
KEY1
LED_R
LED_G
PSEN_6745
WR_6745
RSTN_O
FLASH_RST
6745_RST
SCALER _SCH
Designer
checked by
approved by
Title
Size
D
Number
Revision
Date: 29-Sep-2009
File: E:\PCB\DVD_Main board\DvdMain.PrjPcb
Sheet of

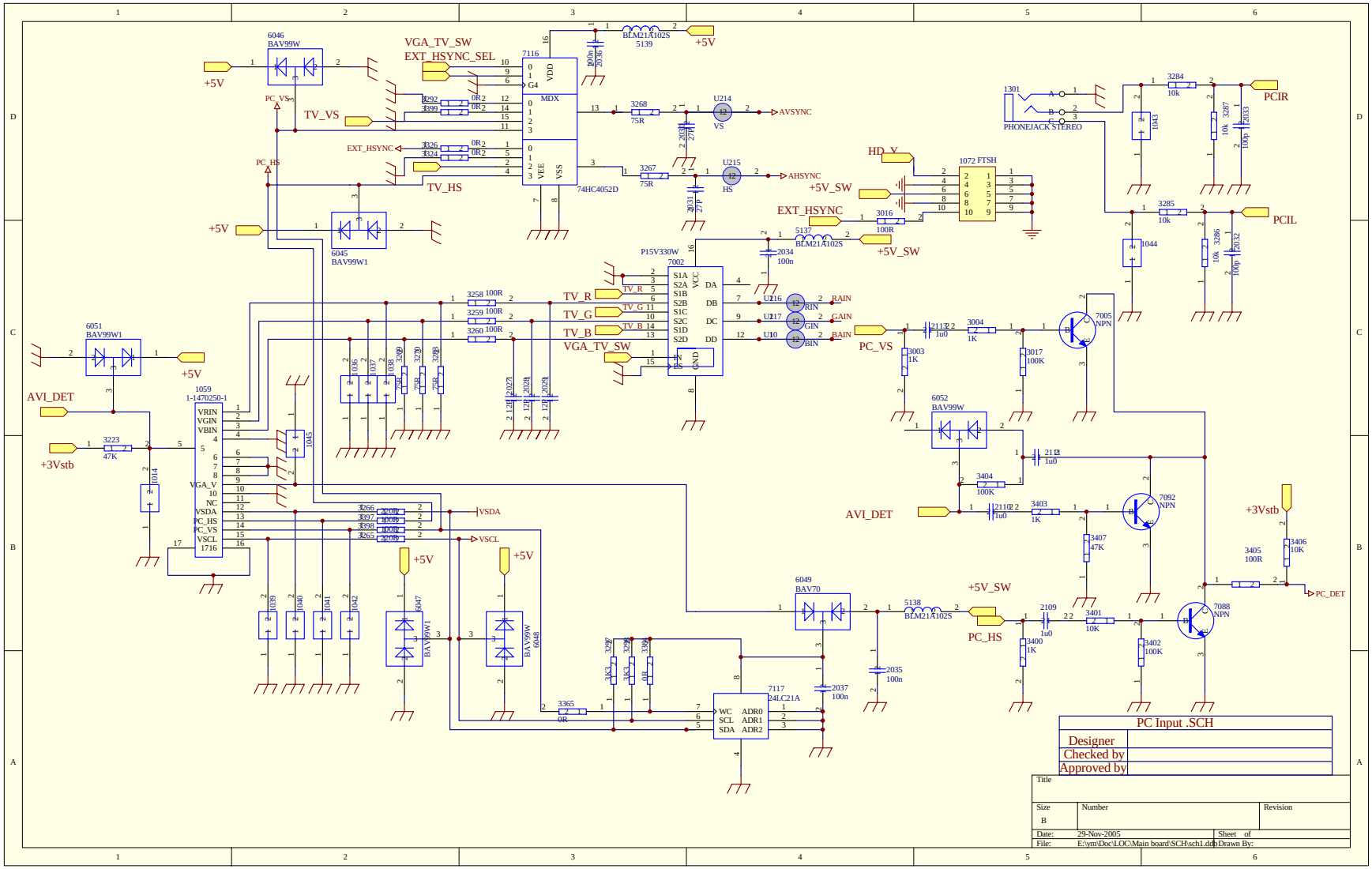
VGA_TV_SW
EXT_HSYNC_SEL
TV_VS
TV_HS
PC_VS
PC_HS
EXT_HSYNC
+5V
+3Vstb
AVI_DET
HD_V
+5V_SW
TV_R
TV_G
TV_B
VGA_TV_SW
PCIR
PCIL
PC_DET
VSDA
VSCL
AVSYNC
AHSYNC
PHONEJACK STEREO
74HC4052D
P15V330W
24LC21A
BAV99W
BAV99W1
BAV70
BLM21A102S
PC Input .SCH
Designer
Checked by
Approved by
Title
Size
B
Number
Revision
Date: 29-Nov-2005
Sheet of
File: E:\ym\Doc\LOC\Main board\SCH\sch1.ddb
Drawn By:

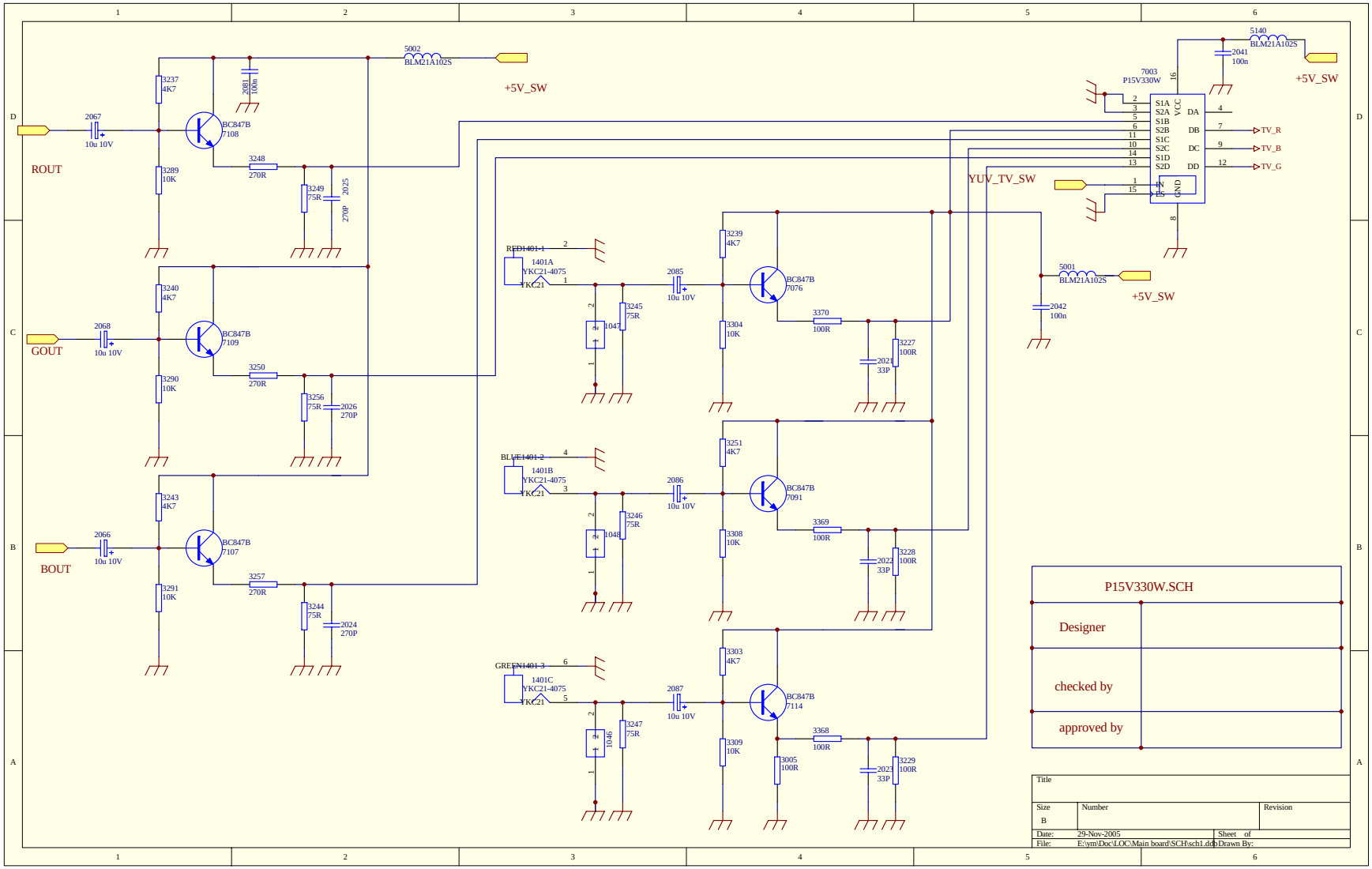
ROUT
GOUT
BOUT
2067
2068
2066
10u 10V
3237
4K7
3240
4K7
3243
4K7
3289
10K
3290
10K
3291
10K
BC847B
7108
BC847B
7109
BC847B
7107
2081
100n
3248
270R
3250
270R
3257
270R
3249
75R
3256
75R
3244
75R
2025
270P
2026
270P
2024
270P
5002
BLM21A102S
+5V_SW
RED1401-1
BLUE1401-2
GREEN1401-3
1401A
1401B
1401C
YKC21-4075
YKC21
1047
1048
1046
3245
75R
3246
75R
3247
75R
2085
2086
2087
3239
4K7
3251
4K7
3303
4K7
3304
10K
3308
10K
3309
10K
BC847B
7076
BC847B
7091
BC847B
7114
3370
100R
3369
100R
3368
100R
3005
100R
2021
33P
2022
33P
2023
33P
3227
100R
3228
100R
3229
100R
YUV_TV_SW
5001
BLM21A102S
2042
100n
+5V_SW
5140
BLM21A102S
2041
100n
+5V_SW
7003
P15V330W
S1A
S2A
S1B
S2B
S1C
S2C
S1D
S2D
VCC
DA
DB
DC
DD
GND
IN
DS
TV_R
TV_B
TV_G
P15V330W.SCH
Designer
checked by
approved by
Title
Size
B
Number
Revision
Date: 29-Nov-2005
Sheet of
File: E:\ym\Doc\LOC\Main board\SCH\sch1.ddb
Drawn By:

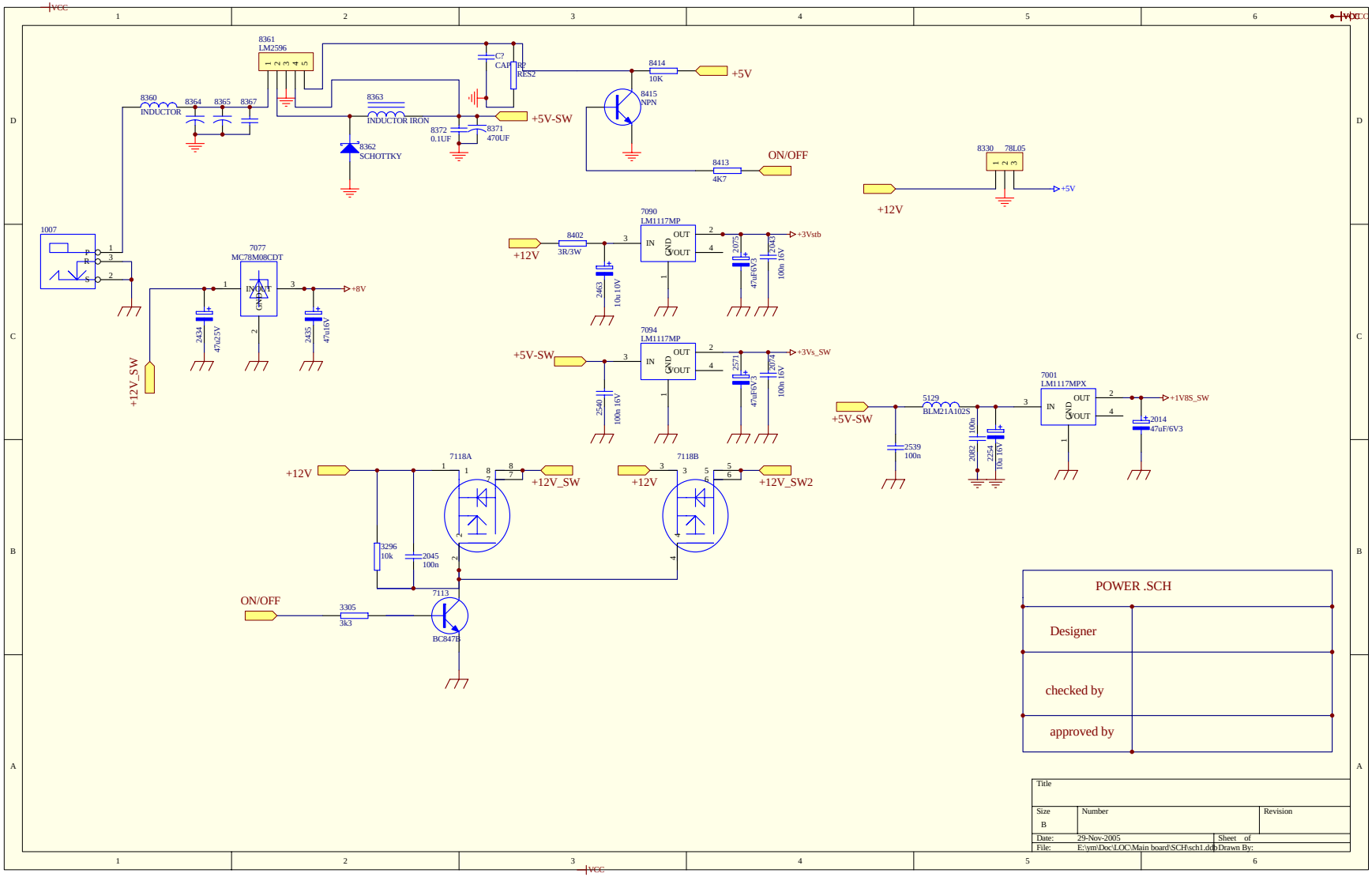
VCC
8361
LM2596
C?
CAP
R?
RES2
8414
10K
+5V
8360
INDUCTOR
8364
8365
8367
8363
INDUCTOR IRON
+5V-SW
8372
0.1UF
8371
470UF
8362
SCHOTTKY
8415
NPN
8413
4K7
ON/OFF
8330
78L05
+5V
+12V
1007
P
R
S
7077
MC78M08CDT
IN
OUT
GND
+8V
2434
47u/25V
2435
47u/16V
+12V_SW
7090
LM1117MP
8402
3R/3W
2463
10u 10V
2075
47uF/6V3
2043
100n 16V
+3Vstb
7094
LM1117MP
2540
100n 16V
2571
47uF/6V3
2074
100n 16V
+3Vs_SW
7001
LM1117MPX
5129
BLM21A102S
2539
100n
2082
100n
2254
10u 16V
2014
47uF/6V3
+1V8S_SW
7118A
7118B
+12V_SW
+12V_SW2
3296
10k
2045
100n
7113
BC847B
3305
3k3
POWER .SCH
Designer
checked by
approved by
Title
Size
B
Number
Revision
Date:
29-Nov-2005
Sheet of
File:
E:\ym\Doc\LOC\Main board\SCH\sch1.ddb
Drawn By: