TV Productor Service Manual

DATE： 2013-09-12

YOUR COMPANY NAME:

YOUR MODEL NAME:

Production & Function Describtion:

Action： V59

Function： VGA+YPbPr+ AV+ ATV +Audio IN+HDMI

TV System： PAL+SECAM

Approved Signatures:

Approved By Customer Project Leader	Reviewed By Project Leader	Issued By D.C.C.

Express Luck Industrial Limited
Address:No.88,BaoTong,NanRoad,Xikeng,HengGangTown,LongGangDistric,Shenzhen,Guangdong, China
TEL：0086-0755-89739888 FAX：0086-0755-89739666

1. Basic Function & Specifications ----------3
2.Maintenance&Safety ----------4
3.Software Upgrade ----------4
4. mainboard Specifications ----------5-24
5. mainboard schematic diagram----------25-32
6. mainboard service manual----------33-44
7.PanelSpecifications----------45-74

. Basic Specifications

Working Temp：0～40℃
Storage Temp：-20～60℃
Humidity（Working）：10～90%
Humidity（Store）：10～90%
CCFL Lifespan（50 Lum，Tube current < Rating）：60000 hour（Il=4.5Ma 25℃）
MTBF:50000 hour (Panel Module NOT inculded)
Power requirement：Voltage 100~240 V 50 / 60 Hz
(Note: The above specifications are suitable for most of the TV models, and for your reference only.)

2. Maintenance & Safety

2.1 Safety Warning:

(1) The inside key components in the LCD must be offered and replaced by qualified and

appointed manufacturer. Otherwise it may generate electricshocks, fires or other important unsafety cases.

(2) Don't try to change the circuits without authorized permission.

(3) Ensure to study the maintenance and service manual thoroughly before doing any of

the maintaining actions.

2.2 High Voltage Warning:

Please be highly noted the high voltages in the circuit.

2.3 Electricshocks and Fires Warning:

*Connect the insulate transformer between the AC current to the LCD before repairing the panel.

*Take care of the Soldering Pad related to the high voltage circuit. When there occurs short-circuit case, please replace the overheated components in time.

*All protective equipments must be re-installed according to the original design.

*Check the rosin joints, stack welds and the insulations, ensure there is no objection attached.

2.4 Antistatic Warning:

*The inner circuit boards in the LCD TV are sensitive to the statics. Please take care of the

ESD protection when replace the circuit boards.

*The circuit boards must be packed by antistatic bags.

*Please wear antistatic ring and gloves when during repairing works.

2.5 Attention:

LVDSVDD – if the LCD is in 5V, it must be switched to the setting of 5V. And if the LCD is in 3.3V, it must be switched to the setting of 3.3V. (Switch setting: **CN6** -- 5V or 3.3V)

3. Instruments

3.1 Multimeter:

Max Input Current : over 1A / Max Input Voltage : 500Vdc
Measurement Range : 10Mvr~100Vdc / Accuracy : 0.03%

3.2 Oscillograph

Frequency Band : over 20M /Input Impedance : over 1M
Input Capacitance : below 30pF / Max Input Voltage : 250V

3.3 PC: XGA (1024X768@60Hz)

3.4 HD Singal Generator: 480P 576P 720P 1080i@50/60HZ

3.5 DVD Player: Audio/Video output, S-VIDEO output, HDMI output.

3.6 VGA cable, S-VIDEOcable, RCA cable, YpbPr cable and HDMI cable.

3.7 Chip test：18.5” or 24” LCD, power board, panel cable, INVERTER cable,

3.8 Control board, Receiver, Remote controller.

3.9 Color TV Pattern Generator: FLUK 54200.

3.10 Work equipment will need Anti static searing-iron, tweezer,wire cutter,soldring tin, rosin,brush

4. Software Upgrade

The chip inside the LCD is designed with a FLASH ROM memory program: it can be erased and reprogrammed, it can be also updated via the USB port or VGA port. The program is related to the chip fucntion ---Different functions of chips need to be planted with different versions of prgrams.

Please ugrade the new software by the USB port the instruction steps below:

-------Please copy the new software to the USB

-------Power ON the TV and press MENU to display the main menu ,then press ◁ / ▷ to the OPTION menu. And then select the software in the root of your USB memory , Press ENTER .then press◁ to update and ▷ to cancel.

Remarks: When the first upgrading is finished, the action of turning on the tv will be a little slow. So when you turn on the TV at the first time, you need to press the "power" key on the remote control several times until you turn on the tv. Turning on the TV at the first time is very important, you need to operate it carefully to avoid the upgrading is not successful.

REV: V1.0

LCD TV CONTROL BOARD SPECIFICATION

MODEL : CVMV29L-F-10

AUTHOR :

CHECKED BY :

APPROVED BY :

PUBLISHED DATE: Mar. 25, 2013

CULTRAVIEW

Shenzhen Cultraview Digital Technology CO., LTD

6F, M-6 Building, Maqueling, High-Tech Park Zone, Nanshan, Shenzhen

TEL.: +86-0755-26507726 FAX: +86-0755-26509299

http:// WWW.CULTRAVIEW.COM

ITEM

1. CHANGE THE LIST OF UPGRADES 2
2. GENERAL DESCRIPTION 3
3. FEATURES 4
4. PRESET MODE FOR USB 5
5. ELECTRICAL CHARACTERISTICS 7
6. SUBSTITUTABLE PRIMARY MATERIALS 8
7. PICTURES 10
8. INTERFACE DEFINITION 13
9. CONFIGURATION 16
10. APPLICATION REQUIREMENT 19
11. EXCURSUS 20

CULTRAVIEW

1. CHANGE THE LIST OF UPGRADES

Version	Description	Page	redaction	Checked	Date
V1.0	First Release	All	YJ.Hao		Mar.25, 2013

2. GENERAL DESCRIPTION

This product is analogue TV board, it can receive the PAL/SECAM/NTSC analogue television signals.

Chipset **TSUMV29** and **TSUMV59** are pin to pin.

With chipset **TSUMV29**, USB slot can only used for updating software.

With chipset **TSUMV59**, USB slot can be used for updating software and play multimedia.

- Supports USB 2.0 multimedia play, supports audio and video play; supports text and picture browse.**(Only for TSUMV59)**
- Analogue and digital HD port input signal largest supports1080P.
- The largest supports various TFT-LCD 1920x1080 resolutions module.

一、The HDMI supports 1.4, the HDCP supports 1.1.

- 3-D video decoding and Chroma separation.**(Only for TSUMV59)**
- 3-D motion adaptive video de-interlaces with edge-oriented adaptive algorithm for smooth low-angle edges.**(Only for TSUMV59)**
- 3-D video noise reduction.**(Only for TSUMV59)**
- Supports analogue 1000 Pages Teletext , Max storage 200 channels.
- Supports A2/NICAM/B/G/D/K/I/M/N demodulation in PAL/SECAM/NTSC.
- Automatic 3:2 pull-down & 2:2 pull-down detection and recovery.
- MStar 5rd Generation Advanced Color Engine (MStarACE-5) automatic picture enhancement.
- Reliable EMC and ESD handle.
- True color OSD, humanized operation menu, supports Channel List, channel edit and other deluxe function.

CULTRAVIEW

3. FEATURES

PANEL	Type	TFT-LCD/LED
	Resolution	Max. 1920X1080
	Interface	Single/ Double LVDS
ATV	Receiving range	49MHz – 863MHz
	Input Impedance	75Ω
	Video System	PAL ,SECAM ,NTSC
	Sound System	BG, DK, I, M/N
		NICAM/A2
PC	Sync	H: 30-75KHz V: 56-75Hz
	Video Level	0.7Vp-p@75ohm
	MODE	Max 1920X1080@60Hz
AV	Color system	PAL/NTSC/SECAM
	Video Level	1Vp-p@75ohm
	Audio Level	500mV rms
YPbPr	Video Level	Y:1Vp-p@75ohm, PbPr:0.7Vp-p@75ohm
	Audio Level	500mVrms
	Format	480i, 480p, 576i, 576p, 720p, 1080i, 1080p
HDMI	Video	Standard TMDS
	Format	480i, 480p, 576i, 576p, 720p, 1080i, 1080p
SCART	Video	CVBS&RGB input, CVBS output
	Video output/input	RBG: 0.7Vp-p@75ohm
		CVBS: 1Vp-p@75ohm
	Audio output/input	500mVrms
Keyboard	Power/Menu/Source/ Up/ Down/ Left/ Right	
OSD Language	English/Chinese/French/German/Spanish/Italian	
Audio Amplifier	2 X3W @ 4ohm THD<10%	
Power input	+12V	
Standby	< 0.2W(Main Board Only)	

CULTRAVIEW

4. PRESET MODE FOR USB

USB FORMAT MODE

Media	File Exit.	Codec		Remark
		Video	Audio	
MOVIE	.avi	MJPEG	MP3, WMA, ,AAC MP2, PCM **(AC3 Need license) (DTS Need license)**	The Max Resolution And Frame Rate: 640X480@30fps Max Data Rate: 10 Mbps
		Xvid,MPEG-2,MPEG-4, H.264, **(Divx Need license)**		The Max Resolution And Frame Rate:1080p@30fps Max Data Rate: 20 Mbps
	.mp4	MPEG-2,MPEG-4,H,264 **(Divx Need license)**		
	.ts/ .trp	MPEG-2,H.264		
	.mpg	MPEG-1,MPEG-2		
	.mkv / .mov	MPEG-1/2/4,H.264, **(Divx Need license)**		
	.dat	MPEG-1	MP2 **(AC3 Need license) (DTS Need license)**	The Max Resolution:352×288 Max Data Rate: 20 Mbps
	.vob	MPEG-2		The Max Resolution:720×576 Max Data Rate: 20 Mbps
	.rm/ .rmvb	RV8,RV9, RV10	COOK	The Max Resolution And Frame Rate:1080p@30fps Max Data Rate: 10 Mbps
PHOTO	.jpg	Progressive JPEG		Max Resolution: 1024×768
	.jpeg	Baseline JPEG		Max Resolution: 15360×8640
	.bmg	----		Max Resolution: 9600×6400 Pixel Depth: 1/4/8/16/24/32 bpp
	.png	Non-Interlaced		Max Resolution: 9600×6400
		Interlaced		Max Resolution: 1200×800
MUSIC	.mp3	---	MP3	Sample Rate:

CULTRAVIEW

	.wma	---	WMA	32K~48KHz Bit Rate: 32K~320Kbps Channel: Mono/Stereo
	.m4a / .aac	---	AAC	Sample Rate: 8K~48KHz Bit Rate: 24K~384Kbps Channel: Mono/Stereo
TEXT	**.txt**	ANSI/UNICODE GB/UTF8		File Size:Max 1MB

Note：

➢ This product includes the following optional patented technologies : **Dolby, DTS, DIVX, SRS ,** etc. If you need to use these patented, please provide the patent license to us, so that the product can meet your requirements . (此产品包括如下可选的专利技术：DOLBY、DTS、DIVX、SRS 等，如您需要开通这些功能，请提前提供相关专利许可给到我司，以便产品能满足您的要求。)

2）Support hard disk，the maximum storage capacity is **400G**

3）Folder in support of the greatest depth is **30**

5）Only support single audio channel audio format and dual-audio channel audio format

Operation Instructions

Hi Speed FS, FAT32, FAT16, NTFS(NTFS compressed file is not supported

CULTRAVIEW

5. ELECTRICAL CHARACTERISTICS

Input Electrical Characteristics

Power	Symbol	Range	Max Current	Ripple
12V (Ext .Adaptor)	+12V	+12V--+12.5V	5A	100mV
12V (Built in)	+12V	+12V--+12.5V	2A	100mV
The current of panel, Inverter and extension modules are not included in max current.				

Power Up Timing

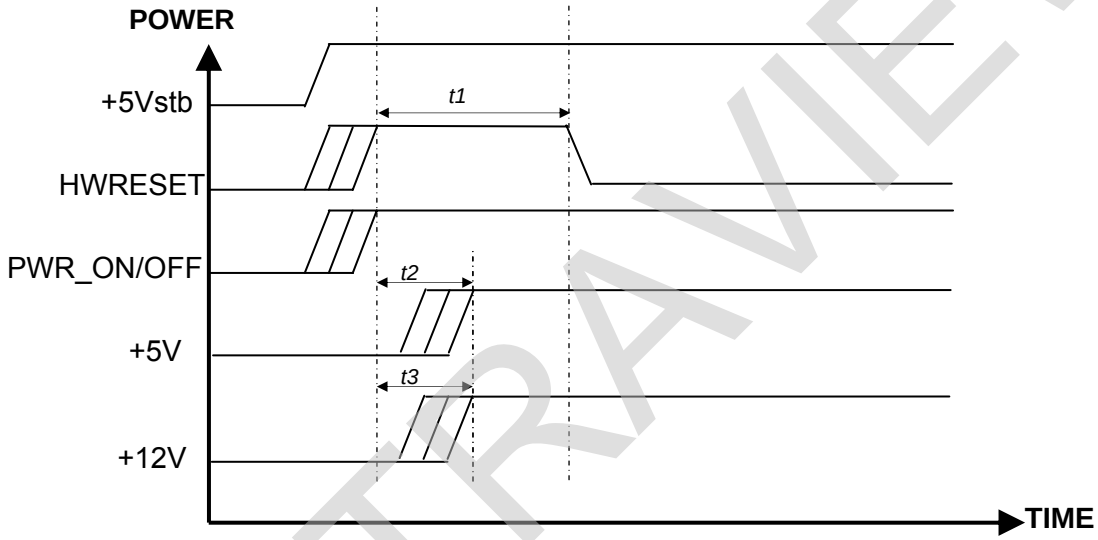

alternation	DESCRIPTION	Min	Type	Max	Unit
t1	Hardware Reste Width	10	200	/	ms
t2	Pwr_on/off t_{setup} TO +5V t_{setup}	/	/	190	ms
t3	Pwr_on/off t_{setup} TO +12V t_{setup}	/	/	190	ms

CULTRAVIEW

6. SUBSTITUTABLE PRIMARY MATERIALS

General materials

Including SMT capacitors, SMT resistors, diodes, transistors, MOSFET, connectors, common inductance, electrolytic capacitor, PCB etc., and having no obvious changes in appearance or color. Our company has two or three alternative suppliers with these materials, maybe we will alternative use these materials for follow-up mass production due to delivery time, stock or other reasons. We no longer notice your company the alternative materials used. If necessary, you can apply for using related materials (mention as above) in samples stage.
(Note: The alternative materials which have been accepted by our materials confirmation department and PP will enter our system.)

Key materials

Including crystals, LDO, SAW Filter, DC-DC, Amplifier, Audio &Video switch, and having obvious changes in appearance and color of general materials, Our company has two or three alternative suppliers with these materials (See following table for detail), maybe we will alternative use these materials for follow-up mass production due to delivery time, stock or other reasons. We will notice your company the alternative materials used in written form. If necessary, you can apply for using related materials (mention as above) in samples stage.

Name	Main Type	Brand	Backup Type	Brand
LDO	BL1117	BL	BM1117	BM
DCDC	SY8120B	Silergy	BL8021	BL
	MP1495	MPS	--	--
Audio Amplifier	NS4263	NSIWAY	--	--
Crystal	24MHz +-20PPM 20PF HC 49US	ZG	24MHz +-20PPM 20PF HC 49US	LS
				TJ

Core materials

Including DDR, FLASH, TUNER, and the materials related to change software. Our company has two or three alternative suppliers with these materials (See following table for detail), maybe we will alternative use these materials for follow-up mass production due to delivery time, stock or other reasons. We will notice your company in written form and we must get your company confirm whether accept before using the alternative materials.

CULTRAVIEW

Name	Main Type	Brand	BackupType	Brand
Chipset	TSUMV59/TSUMV29	MSTAR	--	--
FLASH	W25Q32	WINBOND	GD25Q32BSIG	GD
			W25Q32BVSSIG	Winbond
			MX25L3206EM2I-12G	MXIC
			EN25Q32A	EON
			EN25Q32B	EON
	W25Q16CVSSIG	Winbond	GD25Q16BSIG	GD
			EN25Q16	EON
TUNER	R620D	Rafael	--	--
			--	--

CULTRAVIEW

7. PICTURES

The picture is for a reference only,the actual item is the standard.

The optional connectors and terminals are marked with “*” .

Board Type 1:

TOP VIEW

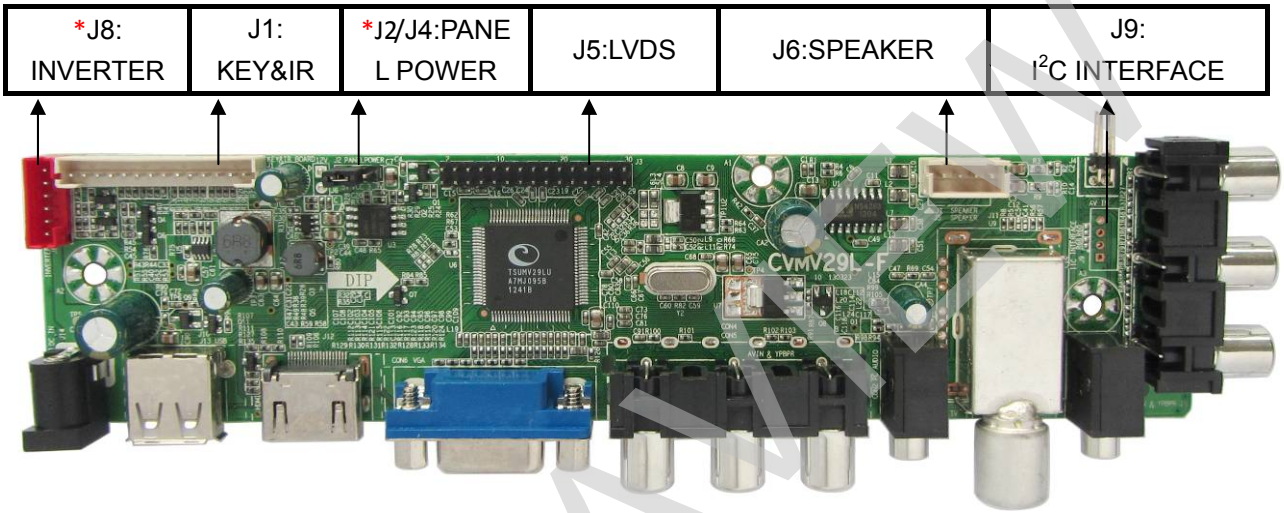

FRFRONT VIEW

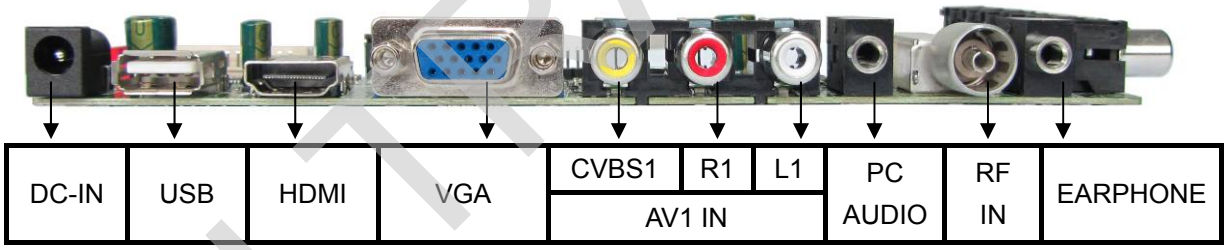

SIDE VIEW

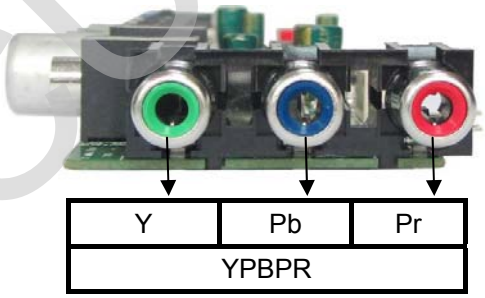

CULTRAVIEW

Board Type 2 :

TOP VIEW

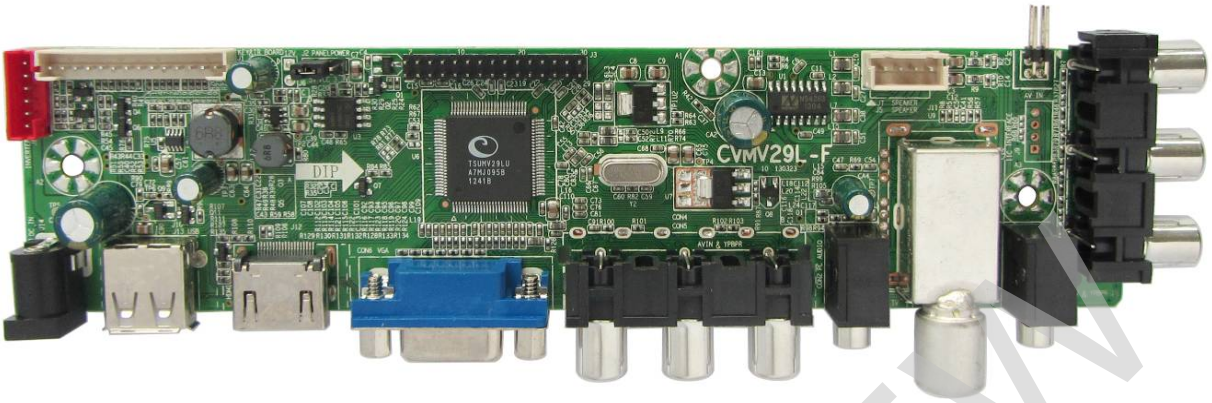

FRONT VIEW

SIDE VIEW

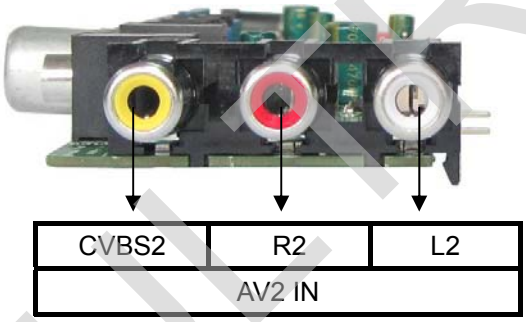

CULTRAVIEW

Board Type 3 :

TOP VIEW

Expand Board Name :

CVAVIN -C-10-130323

Expand Port

AV

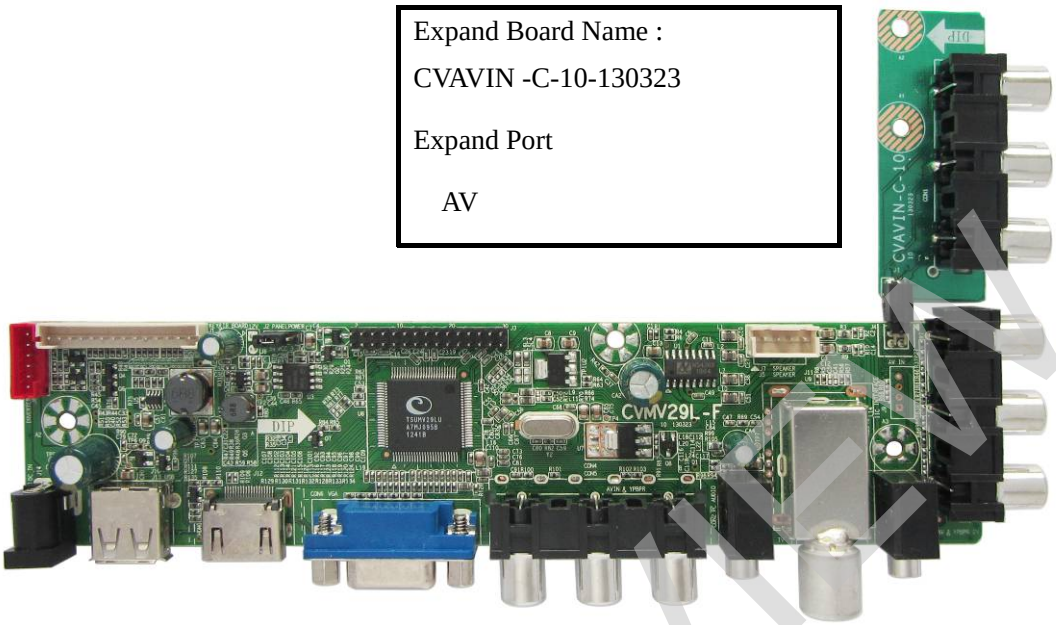

FRONT VIEW

SIDE VIEW

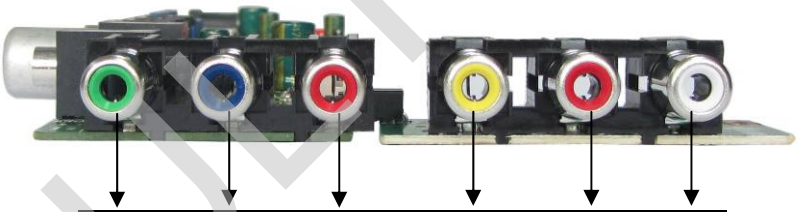

Y	PB	PR	CVBS2	R2	L2
YPBPR			AV2 IN		

CULTRAVIEW

8. INTERFACE DEFINITION

All jacks recognize the square pad as first pin.

J1: KEY&IR BOARD CONNECTOR(14PIN/2.0)

NO	Definition	Description
1	GND	Ground
2	K7	(Reserved)
3	K6	POWER key
4	K5	RIGHT key
5	K4	LEFT key
6	K3	SOURCE key
7	K2	UP key
8	K1	DOWEN key
9	K0	MENU key
10	GND	Ground
11	IR	Remote receive
12	LED_G	Green indicator
13	LED_R	Red indicator
14	LED_5V	+5V power

J2 : PANEL POWER SUPPLY(3PIN/2.54)

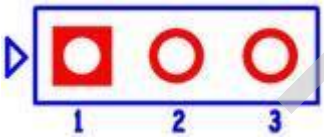

NO	Definition	Description
1	+3.3V	+3.3V panel voltage
2	VCC_PANEL	Panel Power In
3	+5V	+5V panel voltage

J3: LVDS INTERFACE(2×15PIN/2.0)

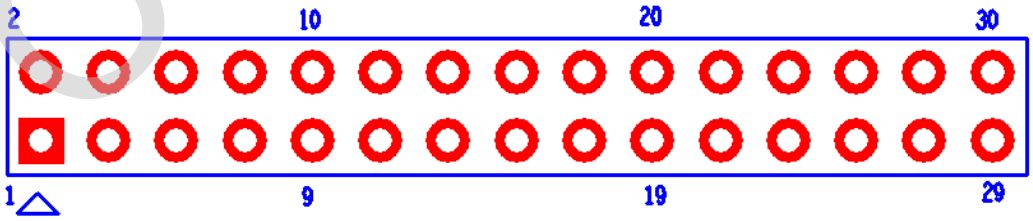

NO.	SYMBOL	DESCRIPTION
1	VCC	Power Supply For Panel
2	VCC	
3	VCC	
4	GND	Ground

CULTRAVIEW

5	GND	Ground
6	GND	Ground
7	RXO0-	LVDS ODD 0- Signal
8	RXO0+	LVDS ODD 0+ Signal
9	RXO1-	LVDS ODD 1- Signal
10	RXO1+	LVDS ODD 1+ Signal
11	RXO2-	LVDS ODD 2- Signal
12	RXO2+	LVDS ODD 2+ Signal
13	GND	Ground
14	GND	Ground
15	RXOC-	LVDS ODD Clock- Signal
16	RXOC+	LVDS ODD Clock + Signal
17	RXO3-	LVDS ODD 3- Signal
18	RXO3+	LVDS ODD 3+ Signal
19	RXE0-	LVDS EVEN 0- Signal
20	RXE0+	LVDS EVEN 0+ Signal
21	RXE1-	LVDS EVEN 1- Signal
22	RXE1+	LVDS EVEN 1+ Signal
23	RXE2-	LVDS EVEN 2- Signal
24	RXE2+	LVDS EVEN 2+ Signal
25	GND	Ground
26	GND	Ground
27	RXEC-	LVDS EVEN Clock- Signal
28	RXEC+	LVDS EVEN Clock + Signal
29	RXE3-	LVDS EVEN 3- Signal
30	RXE3+	LVDS EVEN 3+ Signal

J5 : SPEAKER CONNECTOR(4PIN/2.54)

NO.	SYMBOL	DESCRIPTION
1	ROUT+	Audio Right channel Output+
2	ROUT-	Audio Right channel Output-
3	LOUT-	Audio Left channel Output-
4	LOUT+	Audio Left channel Output+

J7: SPEAKER CONNECTOR(4PIN/2.0)

NO.	SYMBOL	DESCRIPTION
1	ROUT+	Audio Right channel Output+
2	ROUT-	Audio Right channel Output-
3	LOUT-	Audio Left channel Output-
4	LOUT+	Audio Left channel Output+

J8: INVERTER interfaces(6PIN/2.0)

NO	Definition	Description

CULTRAVIEW

1	GND	Ground
2	GND	Ground
3	ADJ	Brightness Adjustment for Panel(Volts DC Output)
4	BL_ON	Back-Light ON/OFF Control for Panel
5	+12V	INVERTER +12V DC Power Supply
6	+12V	INVERTER +12V DC Power Supply

J9:EXTERNAL I^2C CONNECYOR

NO.	SYMBOL	DESCRIPTION
1	+5V	+5V DC Power Supply
2	SCL	External I^2C SCL
3	SDA	External I^2C SDA
4	GND	Ground

J10: EXTERNAL USB CONNECTOR(4PIN/2.0)

NO.	SYMBOL	DESCRIPTION
1	GND	Ground
2	DP	USB Data+
3	DM	USB Data-
4	+5V	+5V Power Supply for USB

CULTRAVIEW

9. CONFIGURATION

Board Type 1:

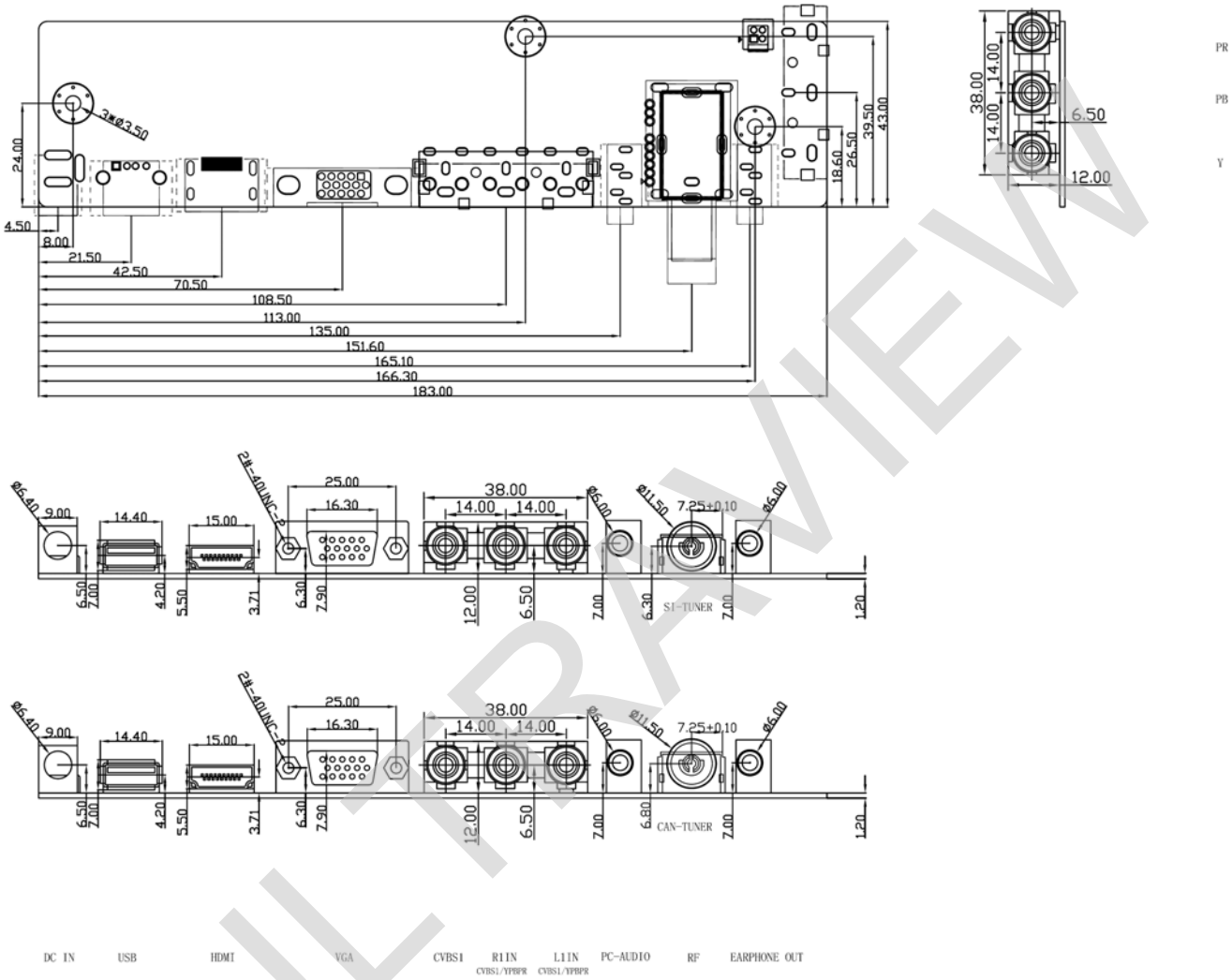

NTSC RF Connect is Φ 9.5mm
The thickness of PCB board: 1.2 mm
Component the tallest altitude: 12.5 mm
Install diameter inside the bore 3.5 mm

CULTRAVIEW

Board Type 2 :

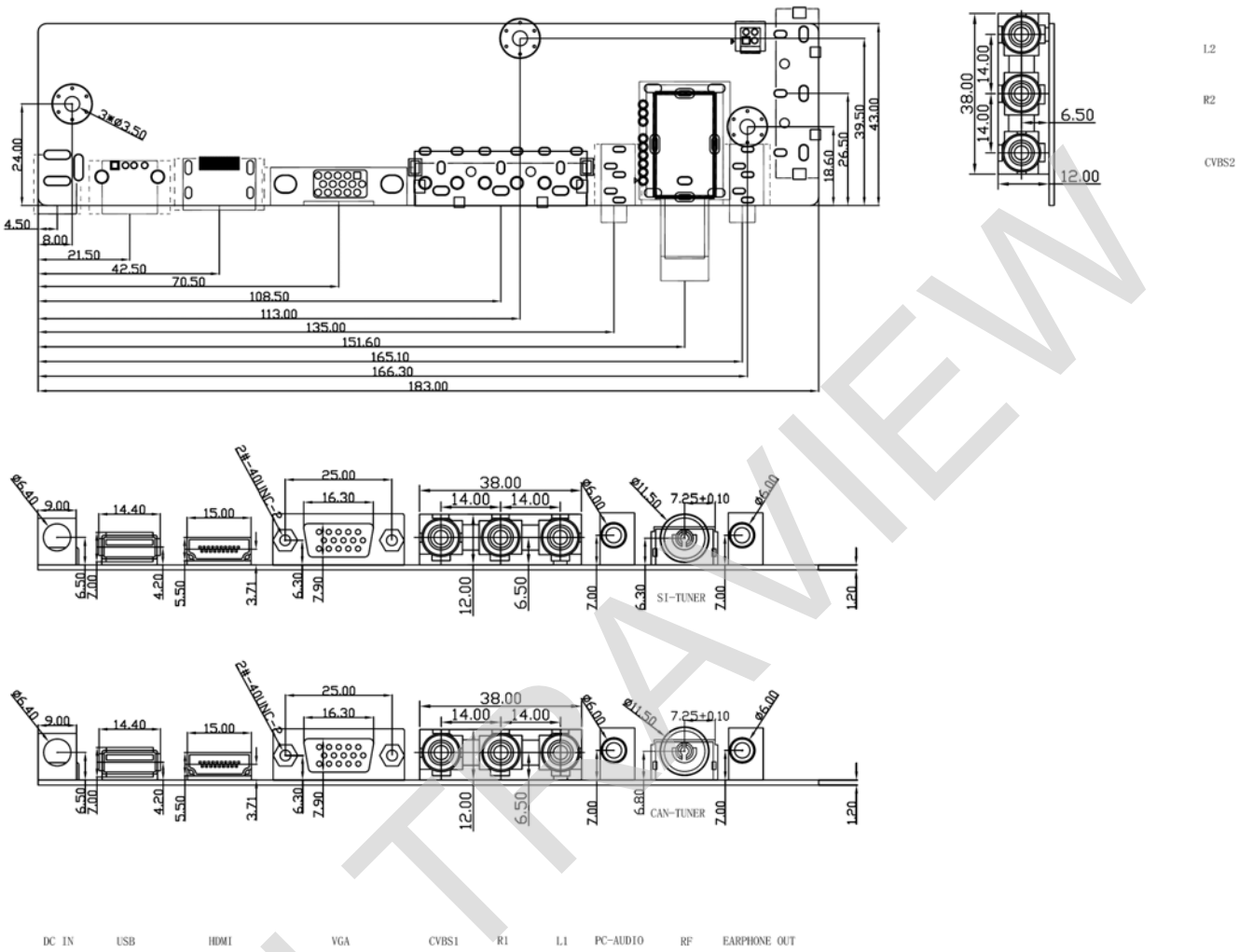

NTSC RF Connect is φ 9.5mm
The thickness of PCB board: 1.2 mm
Component the tallest altitude: 12.5 mm
Install diameter inside the bore 3.5 mm

CULTRAVIEW

Board Type 3:

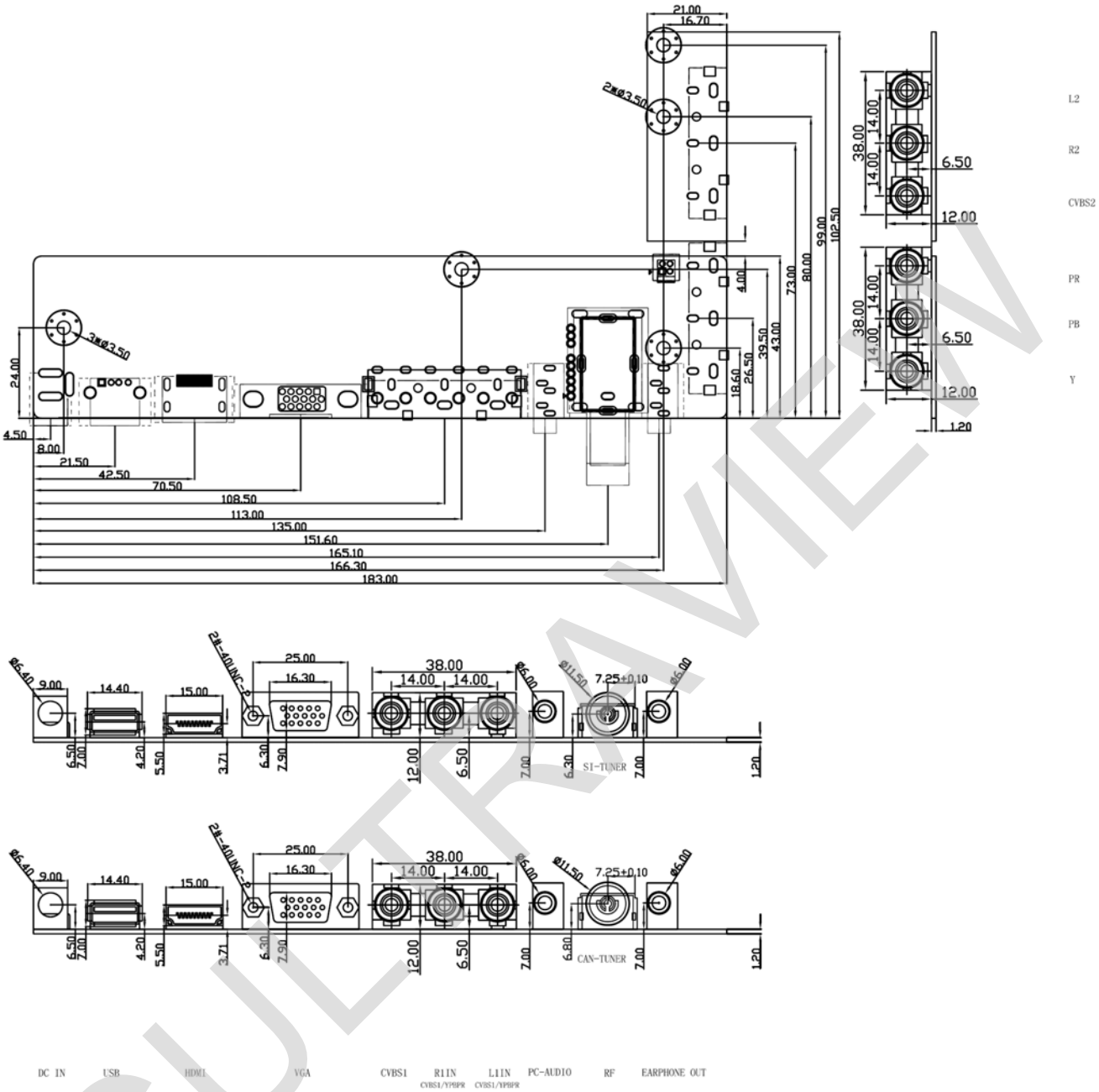

NTSC RF Connect is Φ 9.5mm
The thickness of PCB board: 1.2 mm
Component the tallest altitude: 12.5 mm
Install diameter inside the bore 3.5 mm

CULTRAVIEW

10. APPLICATION REQUIREMENT

- Relative humidity ≤80%
- Store temperature -10~+60 ℃
- Use temperature 0~+40 ℃
- The procedure of the whole machine assembles and transports need to attend ESD transaction.
- When the whole set assemble, it can down pack or side pack, but don't make the board transform or distort, don't be subjected to heavy pressure.
- The hole of each port does not be opened too small, especially the HDMI port hole, avoid the whole set morphing to cause the extrusion of port when installing.
- The hole of RGB socket is recommended the situation of not using the screw stationary on the RGB socket to fix on the structure board.
- The connected wire which between the other boards and this board can't be leaded too long, or affect performance and image quality.
- The whole set inner wires matching reasonable, each connected wire try to not directly cross the PCB board, especially cross over from the main IC, avoid affect the whole set EMC performance.
- n order to obtain better EMC effect of the whole set, we suggest the LVDS twisted pair wire between the main board and panel must be tied up well and try to use shielding wire. If it’s possible, try to put on the magnetic belt ring on the wire which near the board terminal.
- The HDMI and HDCP on the main board are all passed the related certifications, but we just provide testing certification of the inner usage standard. If you need to use legal HDMI and HDCP, please apply related association as formal member by yourself.
- There is ROHS identification on the board and package, the board match ROHS standard.

CULTRAVIEW

11. EXCURSUS

Keyboard and remote definition

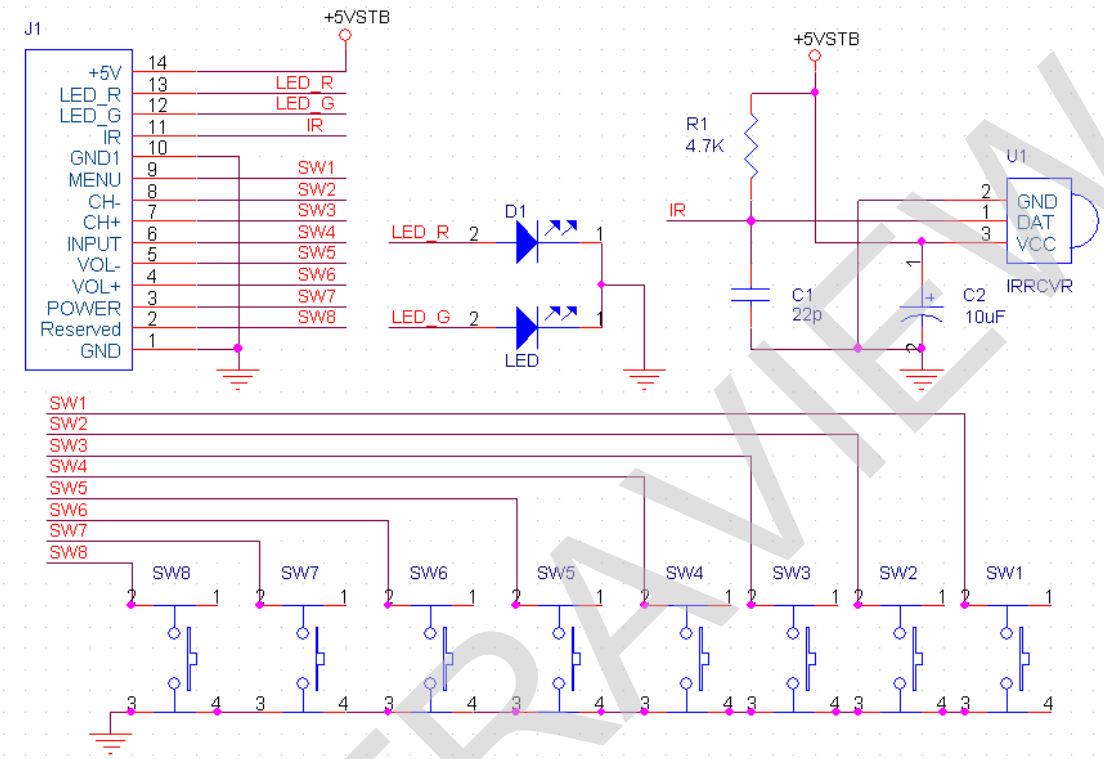

CULTRAVIEW

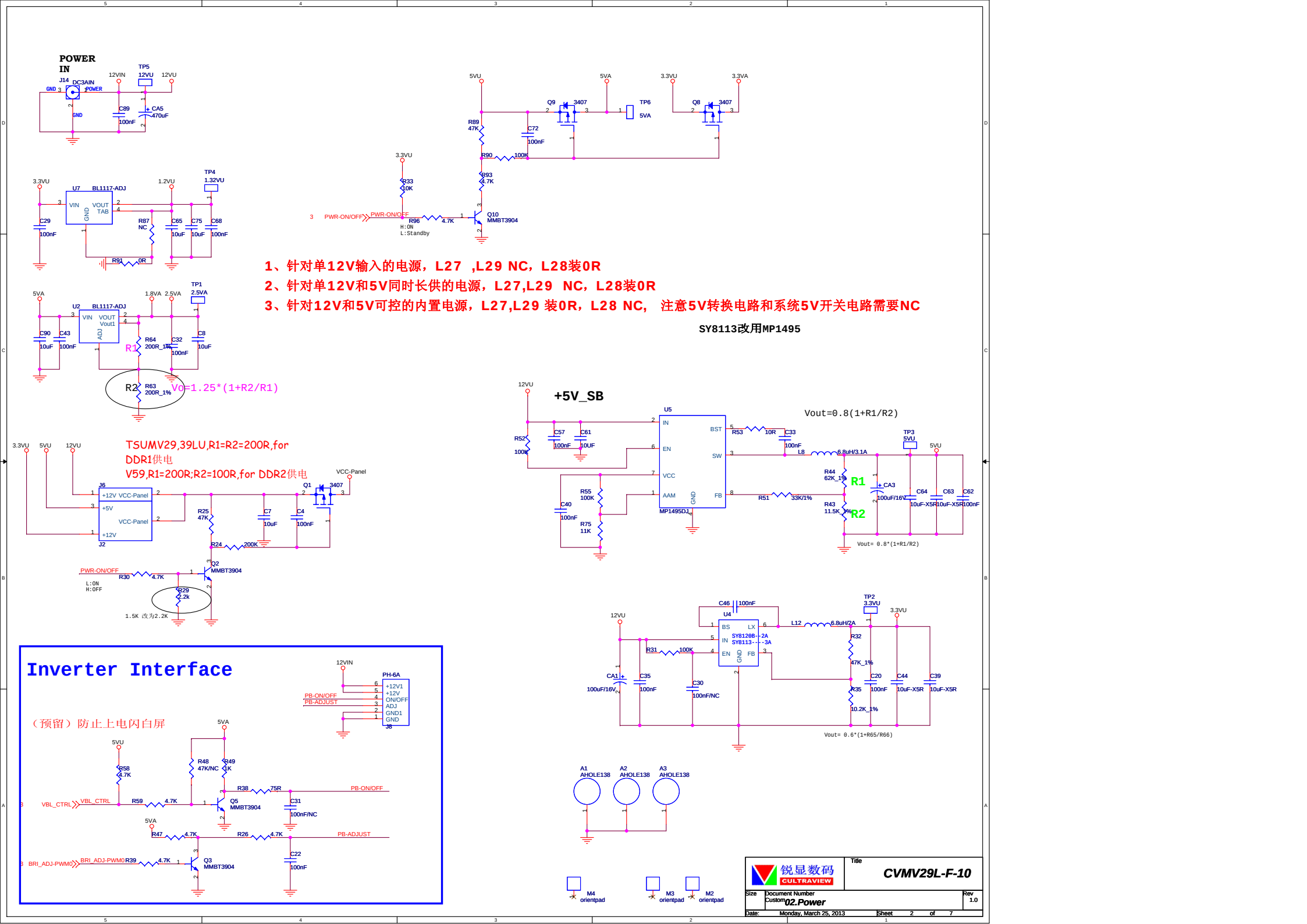
POWER IN
J14 DC3AIN
GND
POWER
12VIN
TP5 12VU
12VU
C89 100nF
CA5 470uF
5VU
5VA
3.3VU
3.3VA
Q9 3407
Q8 3407
TP6 5VA
R89 47K
C72 100nF
R90 100K
R93 4.7K
R33 10K
PWR-ON/OFF
R96 4.7K
H:ON
L:Standby
Q10 MMBT3904
U7 BL1117-ADJ
VIN
VOUT
TAB
GND
1.2VU
TP4 1.32VU
C29 100nF
R87 NC
C65 10uF
C75 10uF
C68 100nF
R91 0R
U2 BL1117-ADJ
Vout1
ADJ
1.8VA
2.5VA
TP1 2.5VA
C90 10uF
C43 100nF
R64 200R_1%
C32 100nF
C8 10uF
R1
R2
R63 200R_1%
Vo=1.25*(1+R2/R1)
1、针对单12V输入的电源，L27 ,L29 NC，L28装0R
2、针对单12V和5V同时长供的电源，L27,L29 NC，L28装0R
3、针对12V和5V可控的内置电源，L27,L29 装0R，L28 NC， 注意5V转换电路和系统5V开关电路需要NC
SY8113改用MP1495
+5V_SB
Vout=0.8(1+R1/R2)
U5
IN
EN
VCC
AAM
BST
SW
FB
GND
MP1495DJ
R52 100K
C57 100nF
C61 10UF
R55 100K
R75 11K
C40 100nF
R53 10R
C33 100nF
L8 6.8uH/3.1A
R44 62K_1%
R43 11.5K_1%
R51 33K/1%
CA3 100uF/16V
C64 10uF-X5R
C63 10uF-X5R
C62 100nF
TP3 5VU
Vout= 0.8*(1+R1/R2)
TSUMV29,39LU,R1=R2=200R,for DDR1供电
V59,R1=200R;R2=100R,for DDR2供电
J6
+12V VCC-Panel
+5V
VCC-Panel
+12V
J2
VCC-Panel
Q1 3407
R25 47K
C7 10uF
C4 100nF
R24 200K
Q2 MMBT3904
PWR-ON/OFF
R30 4.7K
L:ON
H:OFF
R29 2.2k
1.5K 改为2.2K
Inverter Interface
（预留）防止上电闪白屏
12VIN
PH-6A
+12V1
+12V
ON/OFF
ADJ
GND1
GND
J8
PB-ON/OFF
PB-ADJUST
R58 4.7K
R48 47K/NC
R49 1K
R38 75R
VBL_CTRL
R59 4.7K
Q5 MMBT3904
C31 100nF/NC
R47 4.7K
R26 4.7K
BRI_ADJ-PWM0
R39 4.7K
Q3 MMBT3904
C22 100nF
C46 100nF
U4
BS
IN
EN
LX
FB
SY8120B--2A
SY8113---3A
L12 6.8uH/2A
TP2 3.3VU
R31 100K
CA1 100uF/16V
C35 100nF
C30 100nF/NC
R32 47K_1%
R35 10.2K_1%
C20 100nF
C44 10uF-X5R
C39 10uF-X5R
Vout= 0.6*(1+R65/R66)
A1 AHOLE138
A2 AHOLE138
A3 AHOLE138
M4 orientpad
M3 orientpad
M2 orientpad
锐显数码
CULTRAVIEW
Title
CVMV29L-F-10
Size
Document Number
Custom
02.Power
Rev
1.0
Date: Monday, March 25, 2013
Sheet 2 of 7

MAIN IC Chip

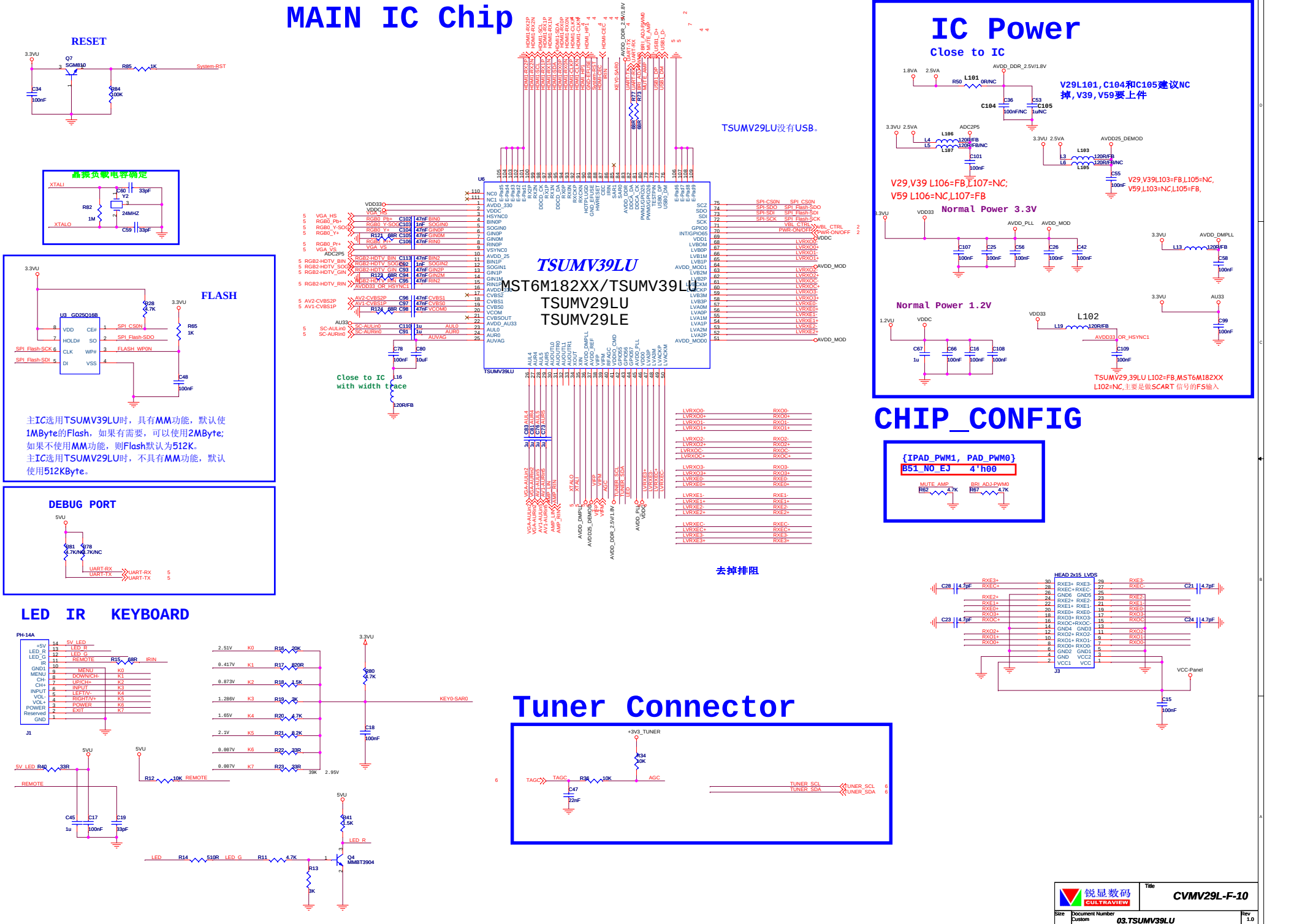
RESET
晶振负载电容确定
FLASH
主IC选用TSUMV39LU时，具有MM功能，默认使1MByte的Flash，如果有需要，可以使用2MByte;
如果不使用MM功能，则Flash默认为512K。
主IC选用TSUMV29LU时，不具有MM功能，默认使用512KByte。
DEBUG PORT
LED IR KEYBOARD
TSUMV29LU没有USB。
TSUMV39LU
MST6M182XX/TSUMV39LU
TSUMV29LU
TSUMV29LE
Close to IC with width trace
去掉排阻
Tuner Connector
IC Power
Close to IC
V29L101,C104和C105建议NC掉,V39,V59要上件
V29,V39 L106=FB,L107=NC;
V59 L106=NC,L107=FB
V29,V39L103=FB,L105=NC,
V59,L103=NC,L105=FB,
Normal Power 3.3V
Normal Power 1.2V
TSUMV29,39LU L102=FB,MST6M182XX
L102=NC,主要是做SCART 信号的FS输入
CHIP_CONFIG
{IPAD_PWM1, PAD_PWM0}
B51_NO_EJ 4'h00
HEAD 2x15 LVDS
锐显数码 CULTRAVIEW
CVMV29L-F-10
Size
Document Number
Custom
03.TSUMV39LU
Rev 1.0
Date: Monday, March 25, 2013
Sheet 3 of 7

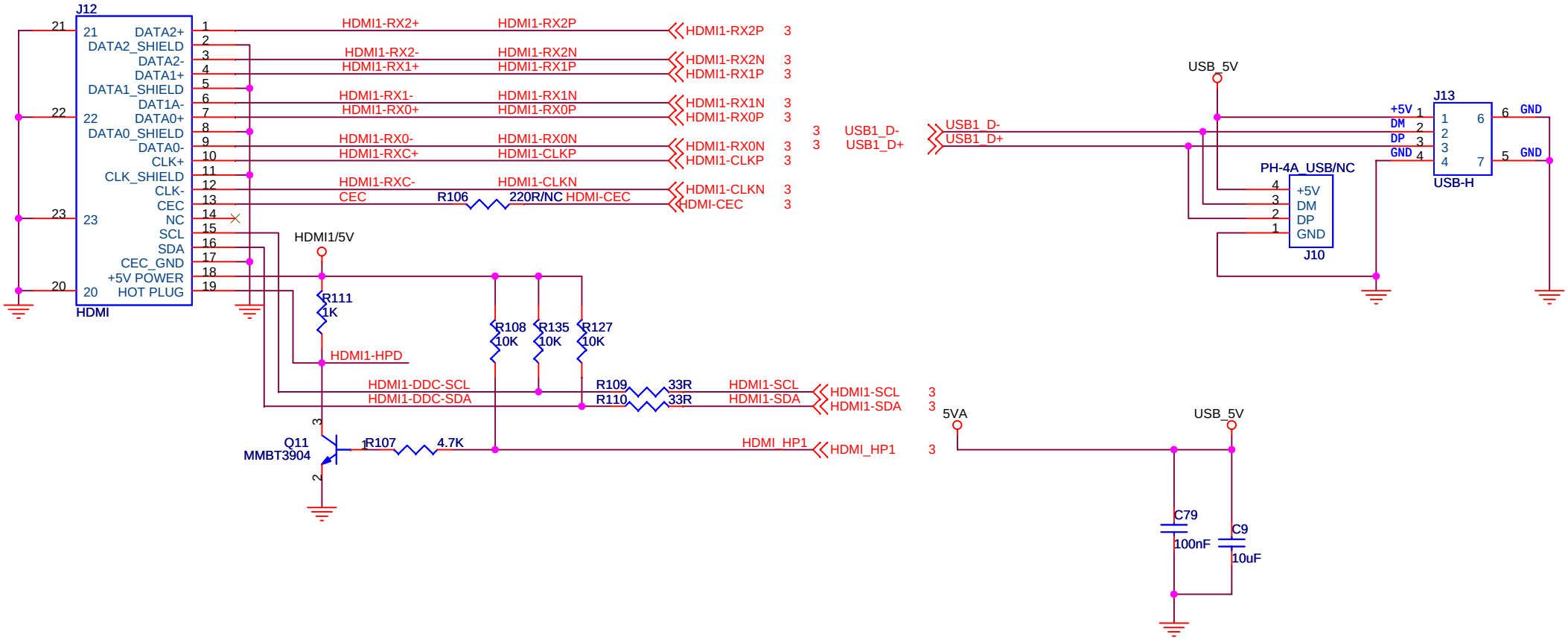

锐显数码 CULTRAVIEW	Title	CVMV29L-F-10
Size: Custom	Document Number: 04.HDMI&USB	Rev: 1.0
Date: Monday, March 25, 2013	Sheet 4 of 7	

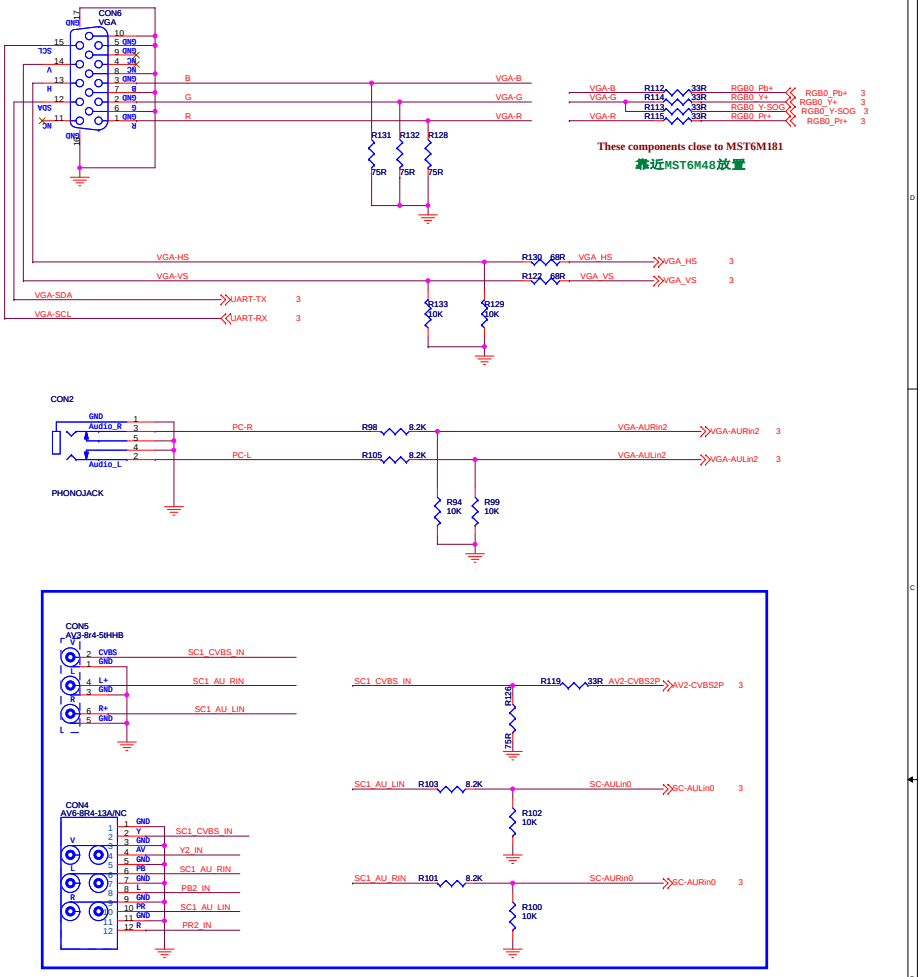

锐显数码 CULTRAVIEW	Title	CVMV29L-F-10	
Size	Document Number Custom	05.VGA&YPbPr&AV	Rev 1.0
Date: Monday, March 25, 2013	Sheet 5 of 7		

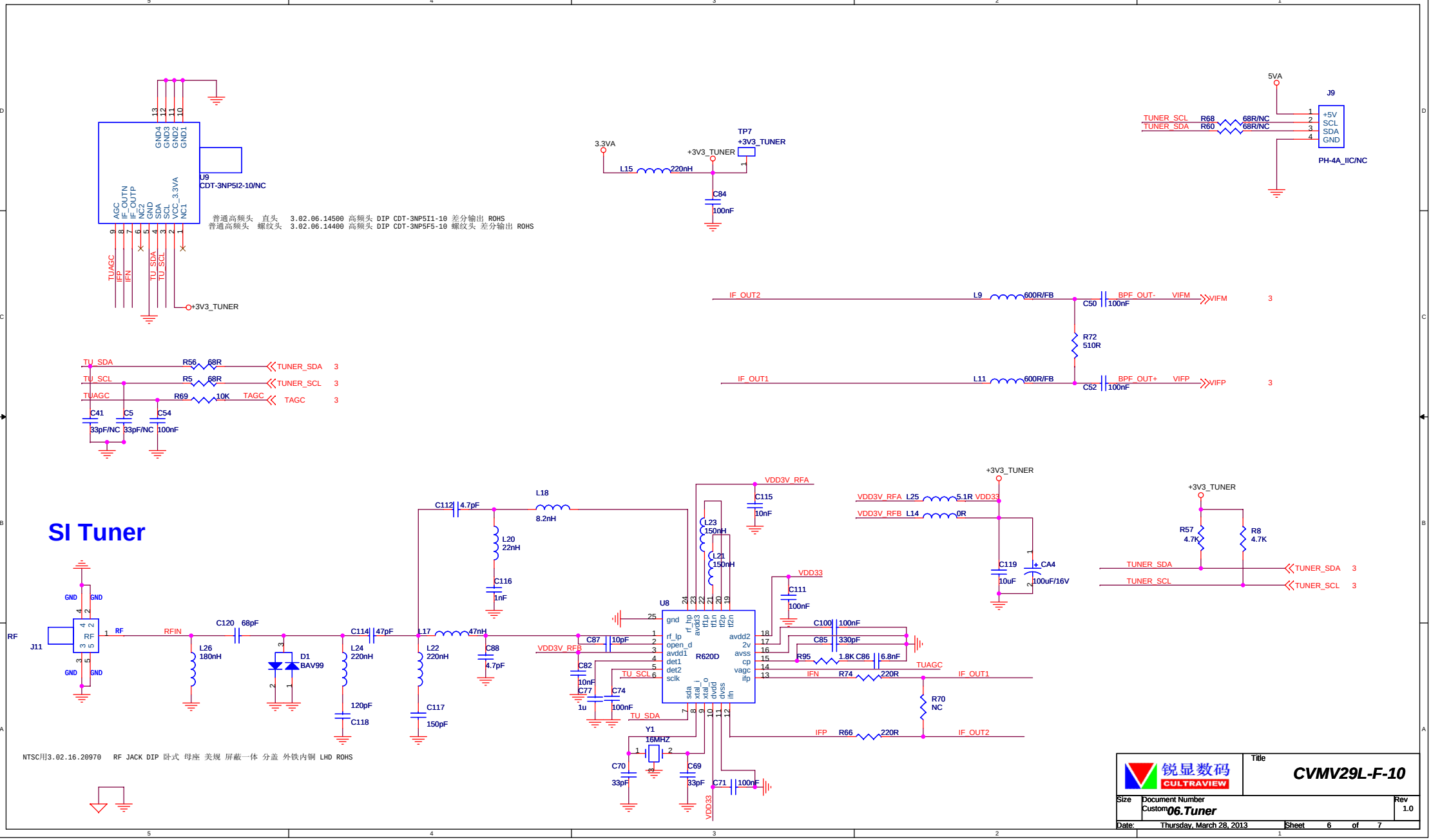
SI Tuner
U9
CDT-3NP5I2-10/NC
普通高频头 直头 3.02.06.14500 高频头 DIP CDT-3NP5I1-10 差分输出 ROHS
普通高频头 螺纹头 3.02.06.14400 高频头 DIP CDT-3NP5F5-10 螺纹头 差分输出 ROHS
TP7
+3V3_TUNER
3.3VA
L15 220nH
C84 100nF
J9
PH-4A_IIC/NC
TUNER_SCL R68 68R/NC
TUNER_SDA R60 68R/NC
IF_OUT2 L9 600R/FB C50 100nF BPF_OUT- VIFM
R72 510R
IF_OUT1 L11 600R/FB C52 100nF BPF_OUT+ VIFP
TU_SDA R56 68R TUNER_SDA
TU_SCL R5 68R TUNER_SCL
TUAGC R69 10K TAGC
C41 33pF/NC C5 33pF/NC C54 100nF
VDD3V_RFA L25 5.1R VDD33
VDD3V_RFB L14 0R
C119 10uF CA4 100uF/16V
R57 4.7K R8 4.7K
U8
R620D
VDD33
C115 10nF
C111 100nF
L18 8.2nH
C112 4.7pF
L20 22nH
C116 1nF
L23 150nH
L21 150nH
C100 100nF
C85 330pF
R95 1.8K C86 6.8nF
R74 220R
R70 NC
R66 220R
IF_OUT1
IF_OUT2
TUAGC
IFN
IFP
Y1 16MHZ
C70 33pF
C69 33pF
C71 100nF
J11
RF
RFIN
C120 68pF
L26 180nH
D1 BAV99
C114 47pF
L24 220nH
120pF C118
L17 47nH
L22 220nH
C117 150pF
C88 4.7pF
C87 10pF
C82 10nF
C77 1u
C74 100nF
VDD3V_RFB
NTSC用3.02.16.20970 RF JACK DIP 卧式 母座 美规 屏蔽一体 分盖 外铁内铜 LHD ROHS
锐显数码 CULTRAVIEW
Title
CVMV29L-F-10
Size
Document Number
Custom 06.Tuner
Rev 1.0
Date: Thursday, March 28, 2013
Sheet 6 of 7

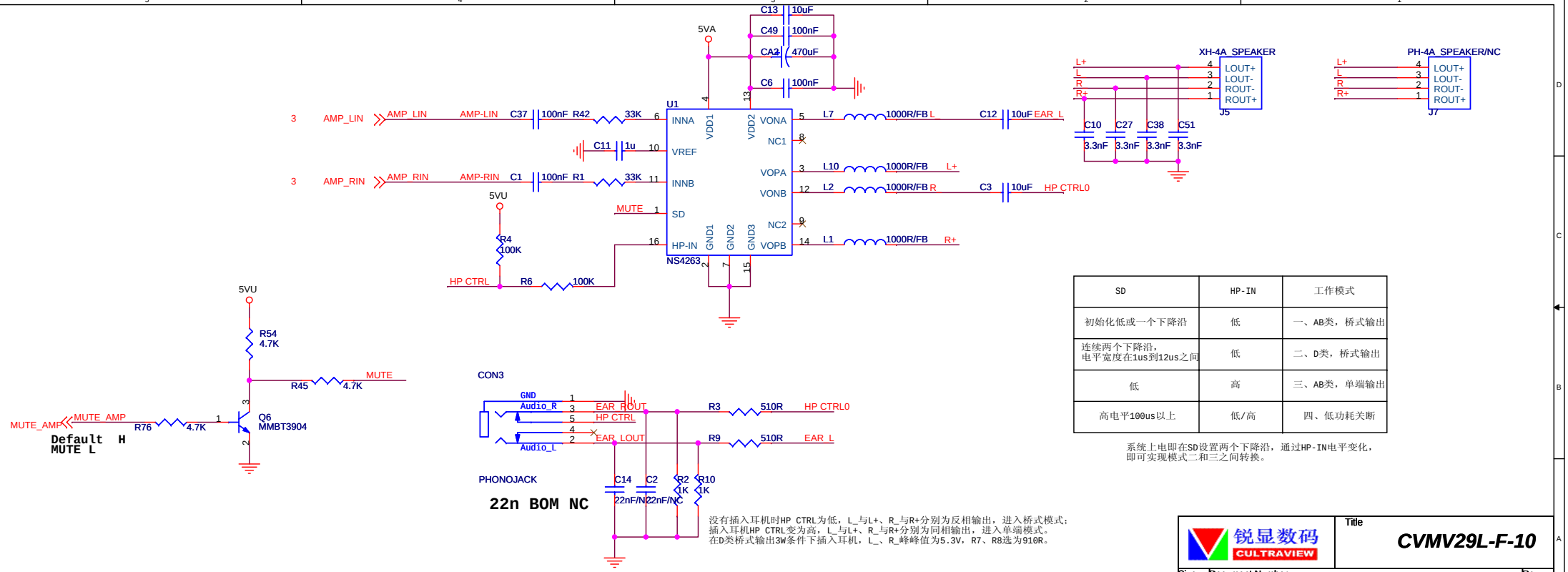

SD	HP-IN	工作模式
初始化低或一个下降沿	低	一、AB类，桥式输出
连续两个下降沿，电平宽度在1us到12us之间	低	二、D类，桥式输出
低	高	三、AB类，单端输出
高电平100us以上	低/高	四、低功耗关断

系统上电即在SD设置两个下降沿，通过HP-IN电平变化，即可实现模式二和三之间转换。

没有插入耳机时HP CTRL为低，L_与L+、R_与R+分别为反相输出，进入桥式模式；
插入耳机HP CTRL变为高，L_与L+、R_与R+分别为同相输出，进入单端模式。
在D类桥式输出3W条件下插入耳机，L_、R_峰峰值为5.3V，R7、R8选为910R。

锐显数码 CULTRAVIEW

Title: CVMV29L-F-10

Size: Custom | Document Number: 07.AMP | Rev: 1.0

Date: Thursday, March 28, 2013 | Sheet 7 of 7

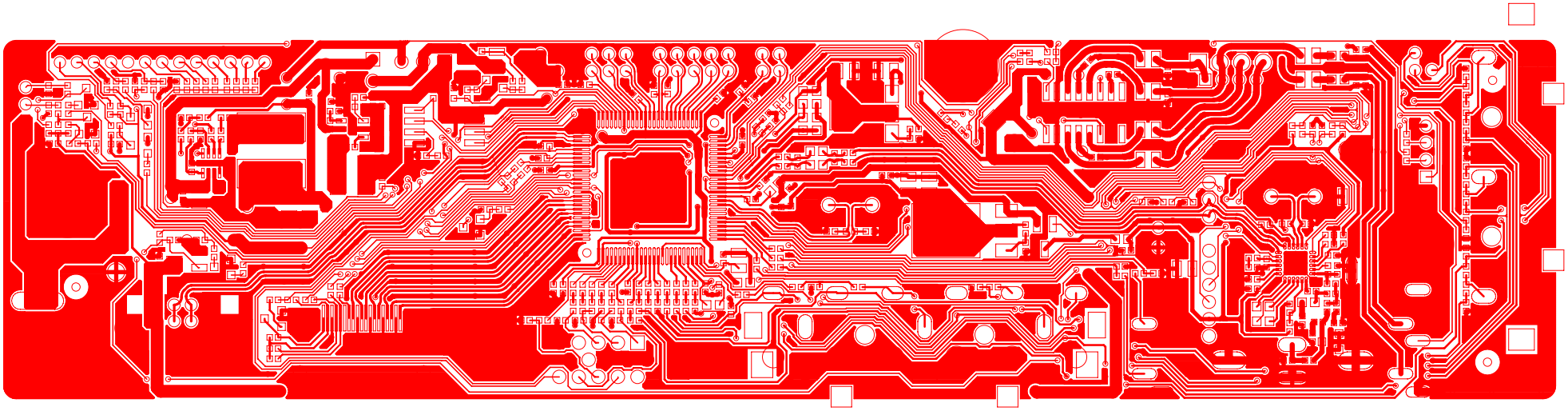

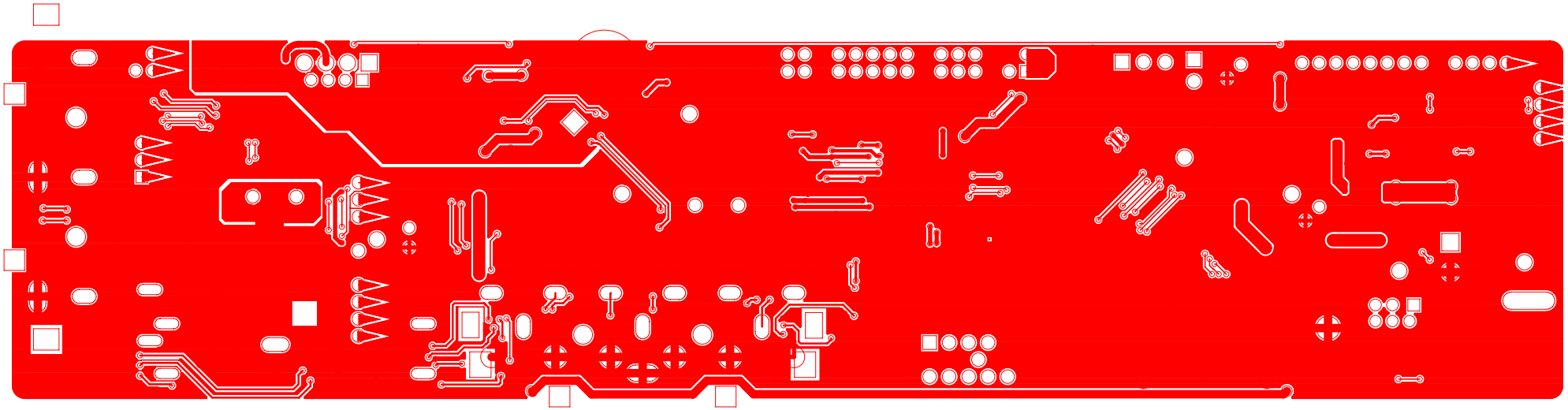

CV29L-F-10
Common problems solution

—System Chart
—Power Units Problem Solving
—Display Units Problem Solving
—Audio Units Problem Solving
—Functional Units Problem Solving

CV29L-F-10 System Block

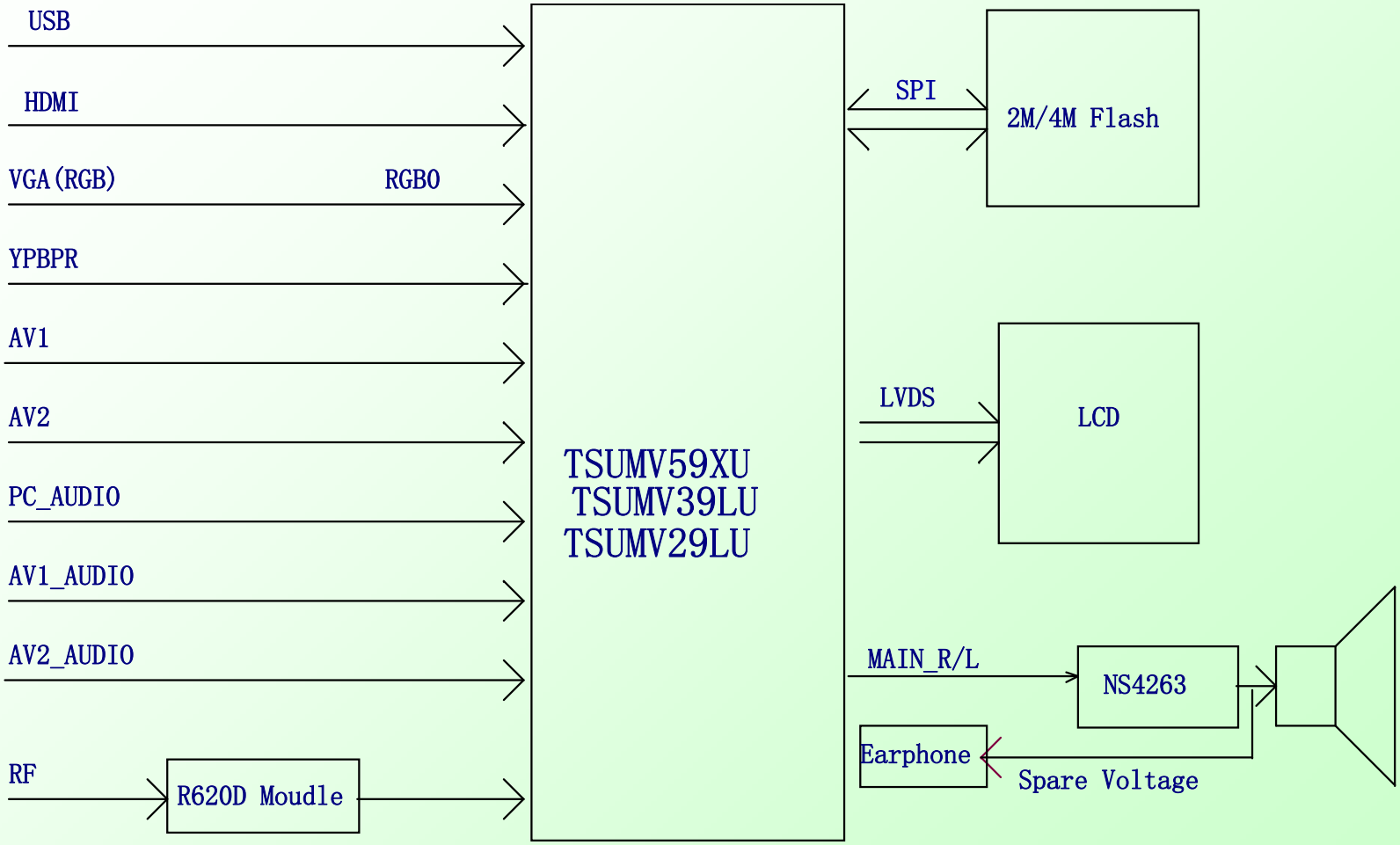

Figure.1 Power Units Problem Solving

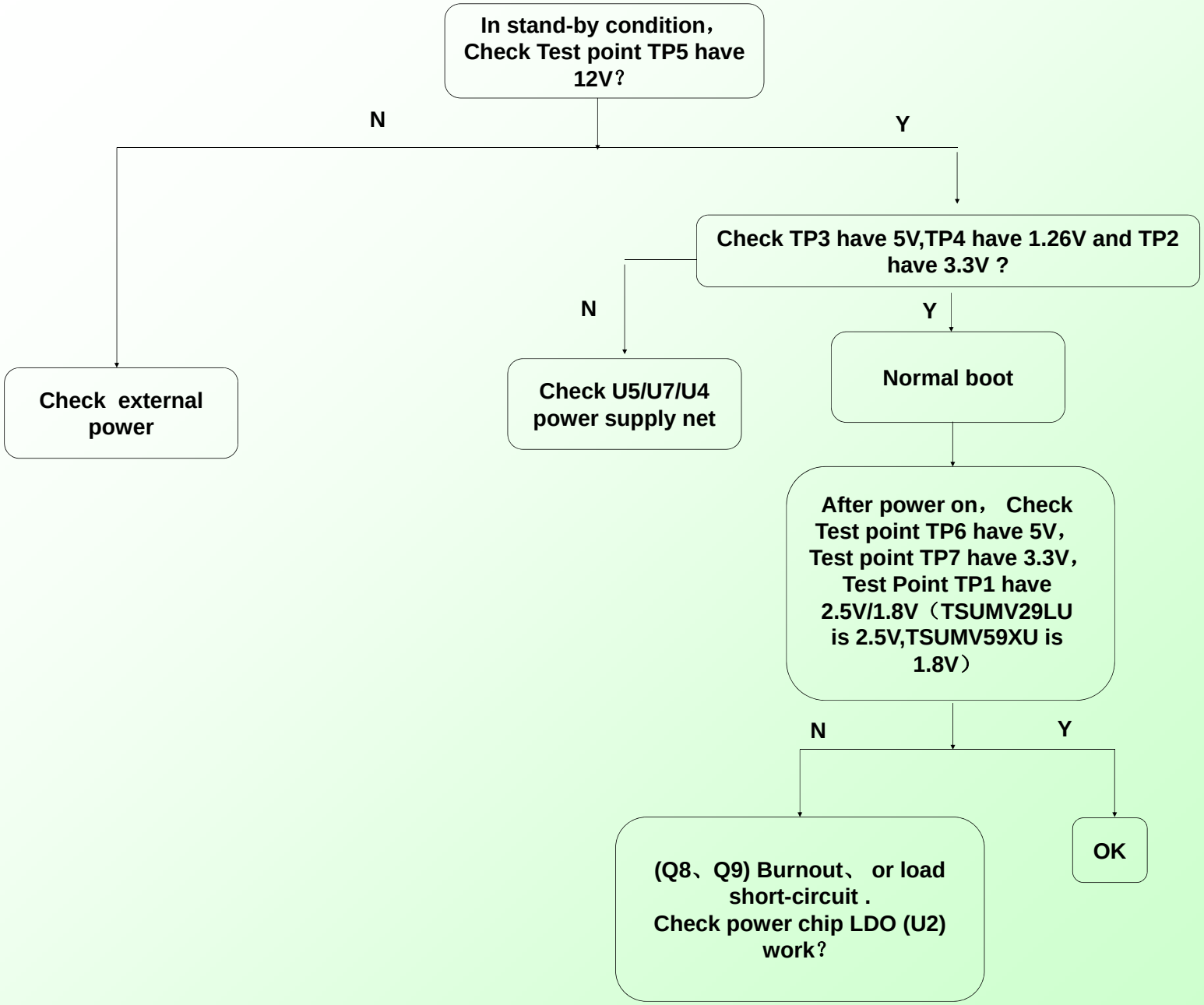

Figure.2 Display Unit (black screen)

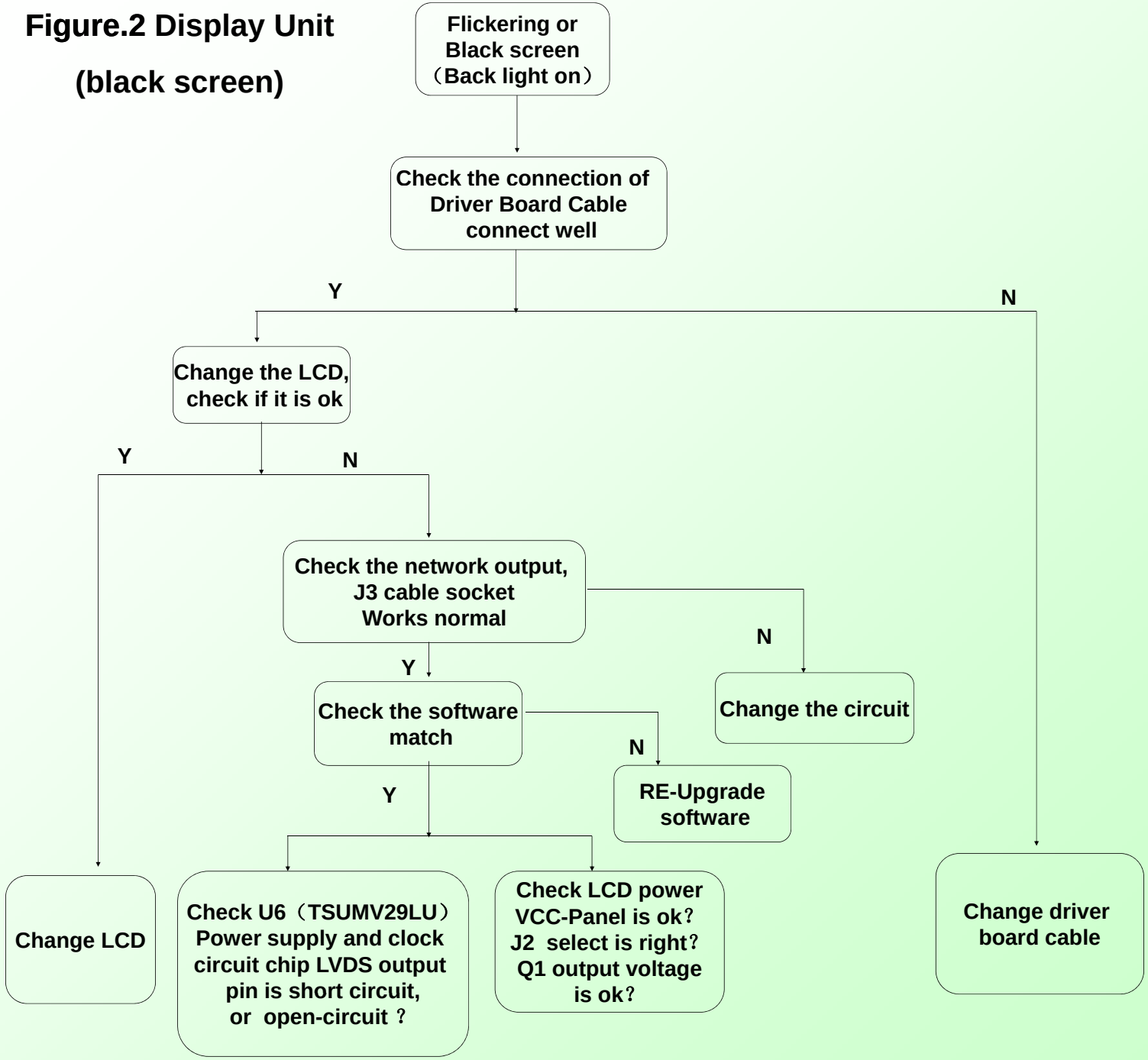

Figure.3 Display Unit (black screen)

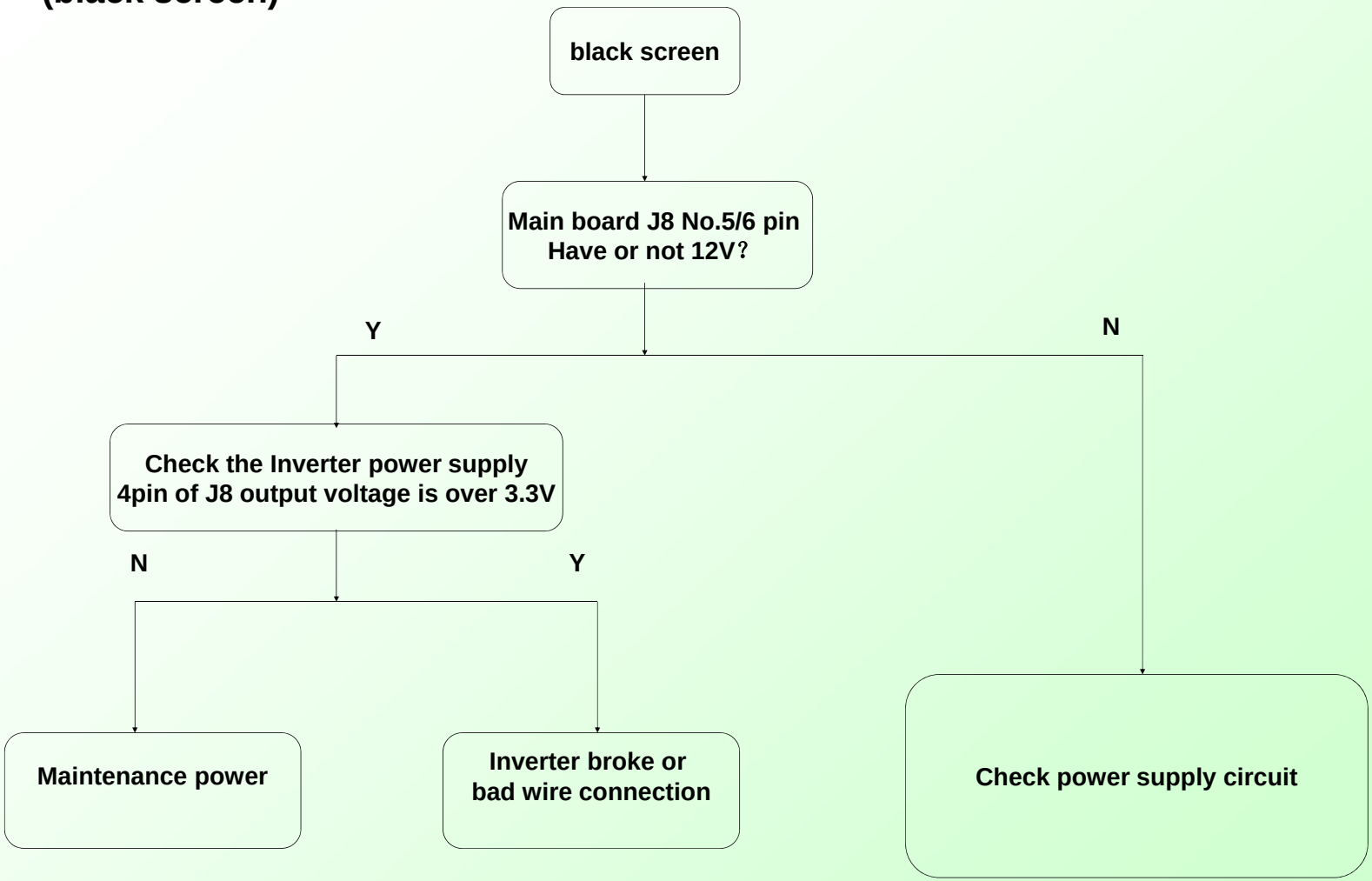

Figure.4 Audio Unit (no sound)

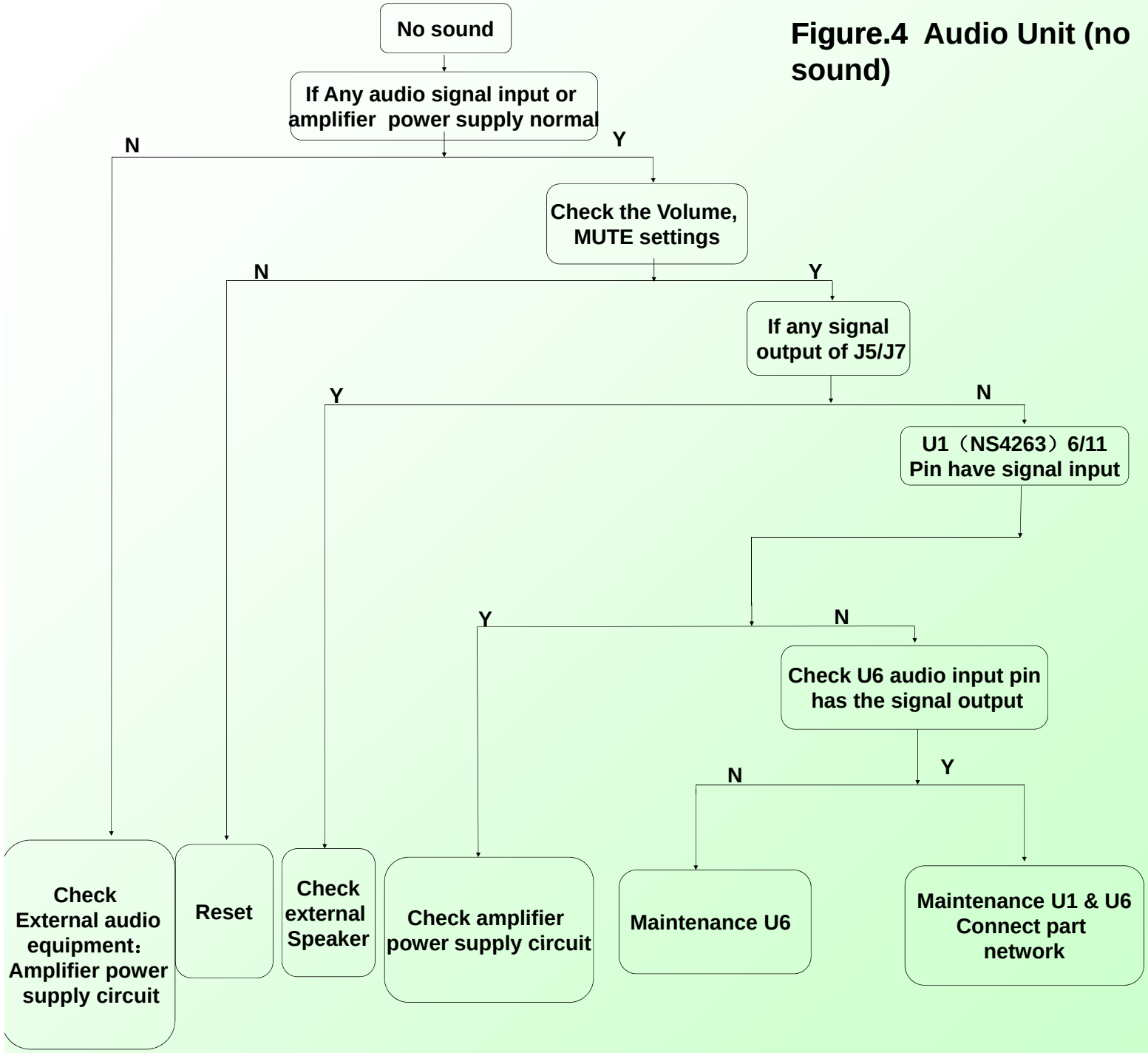

Figure.5 Function Unit (ATV broke down)

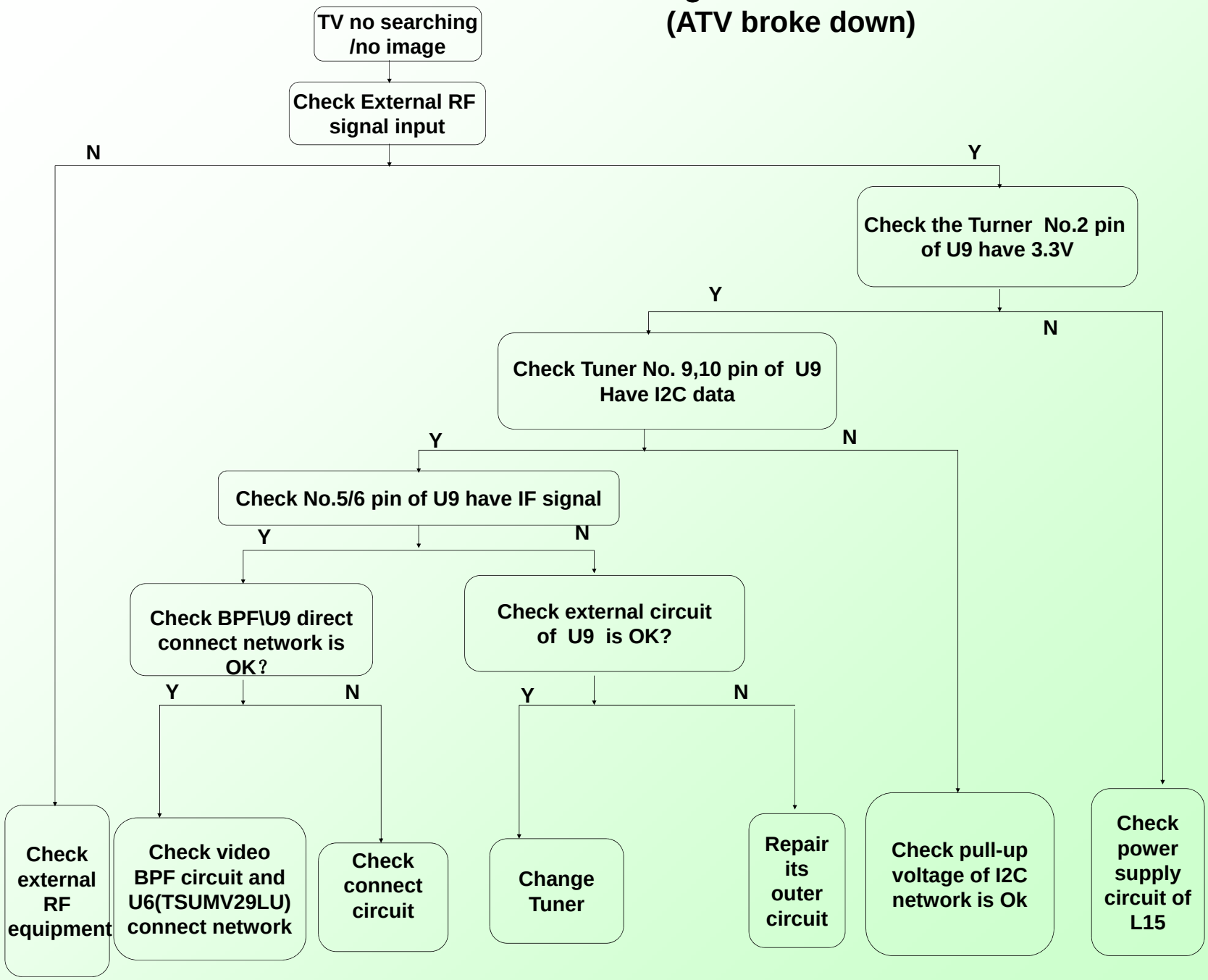

Figure.6 Function Unit （ATV with the image but no sound)

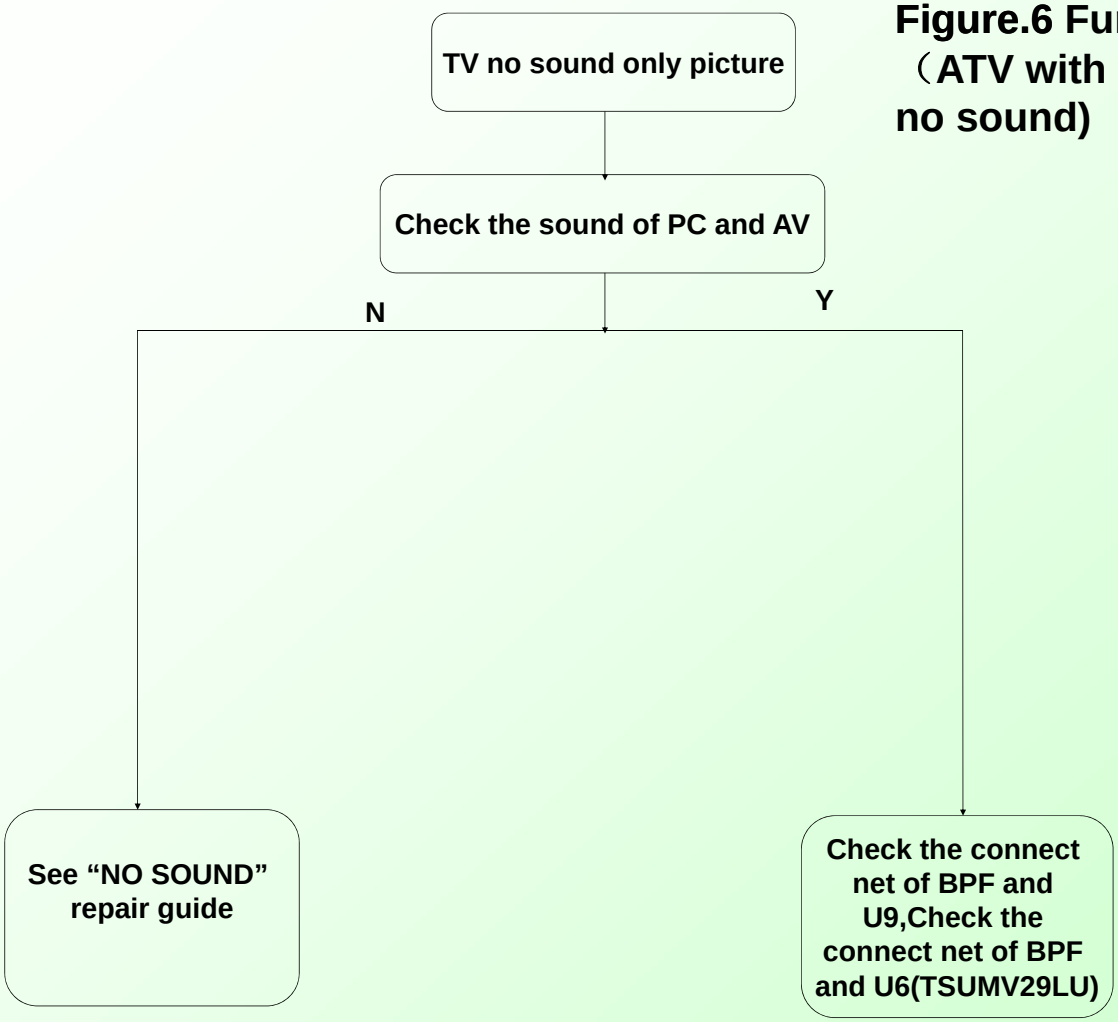

Figure.7 Function Unit (PC)

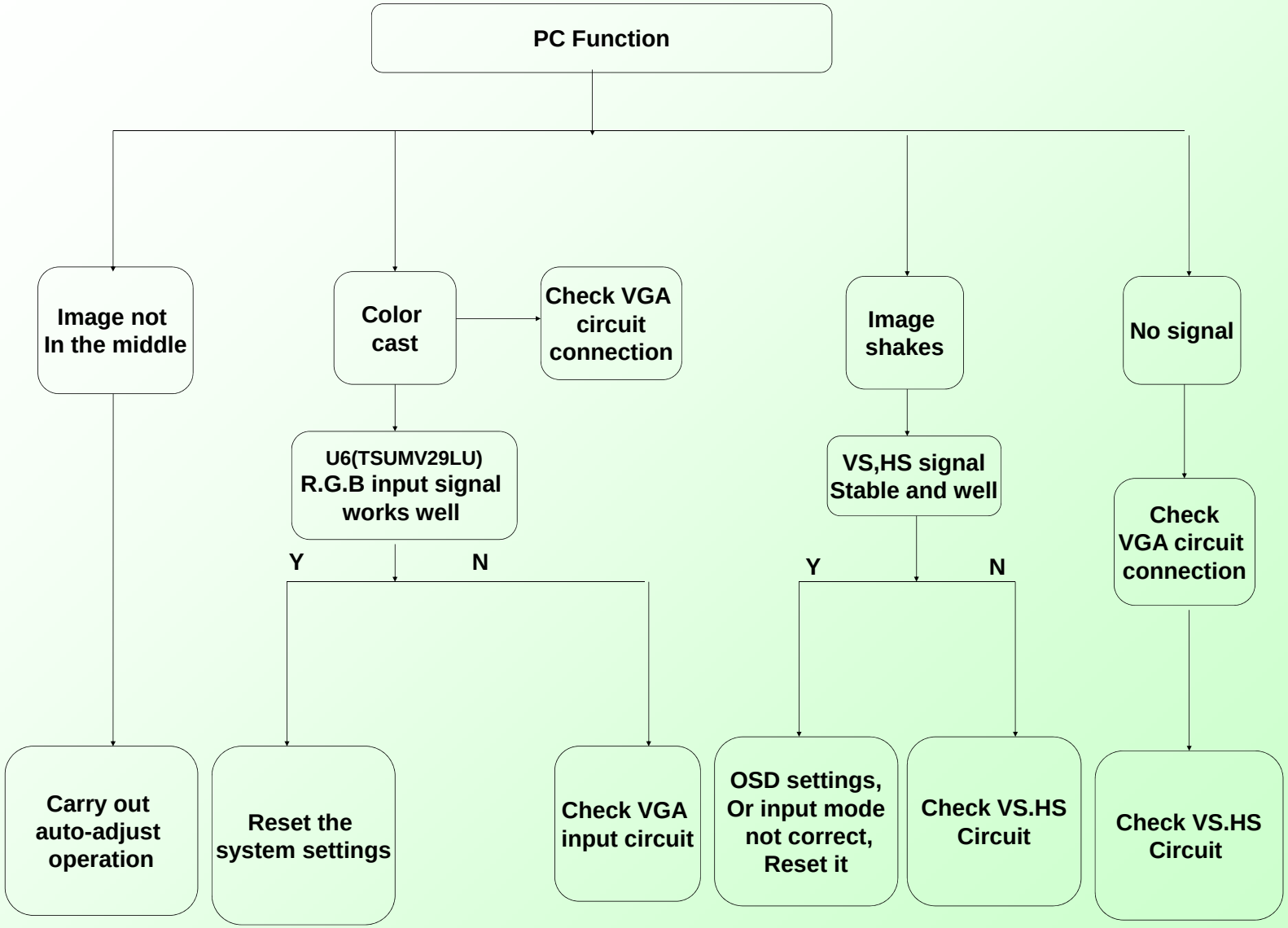

Figure.8 Function Unit

（VGA）

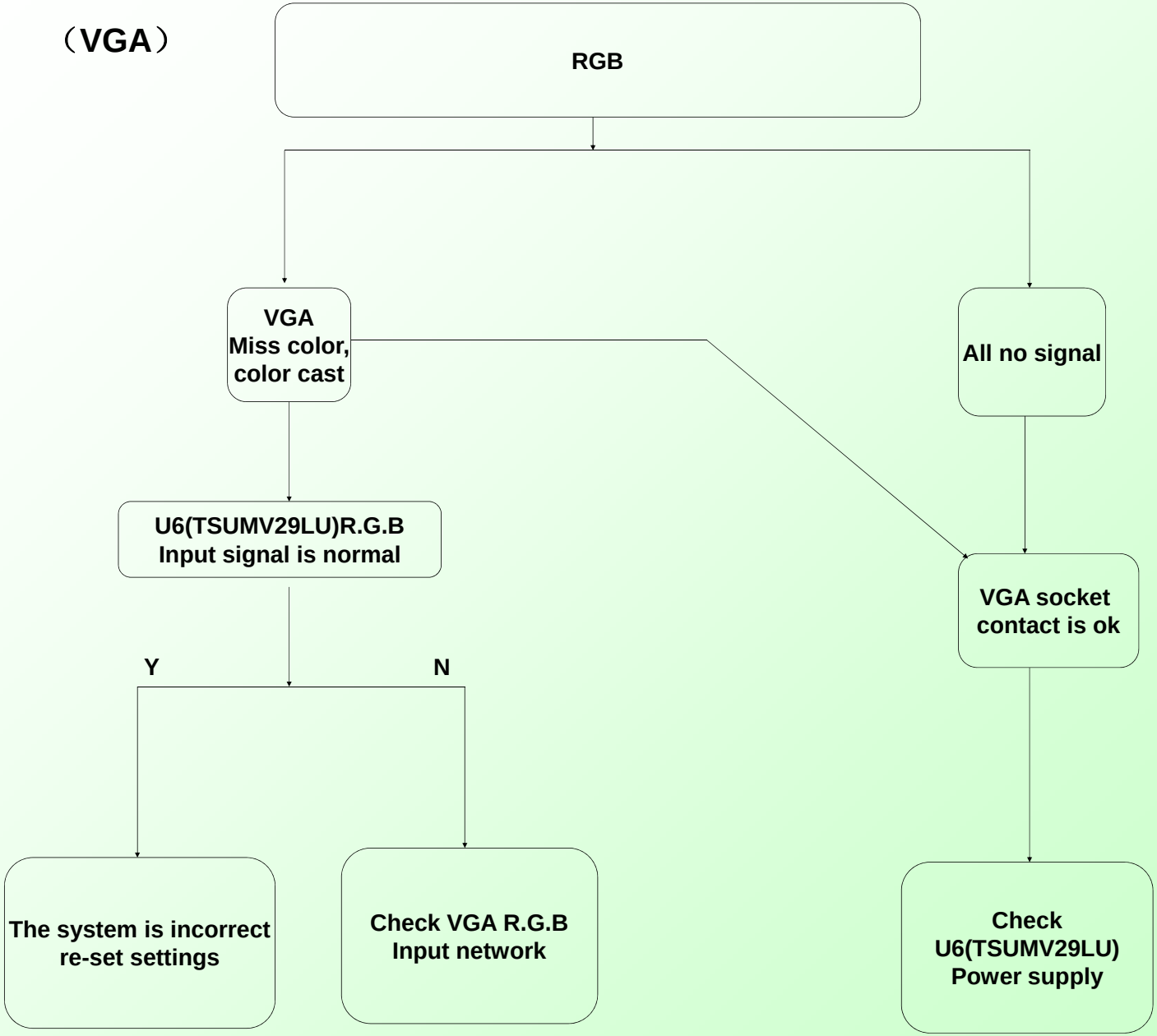

Figure.9 Function Unit （HDMI）

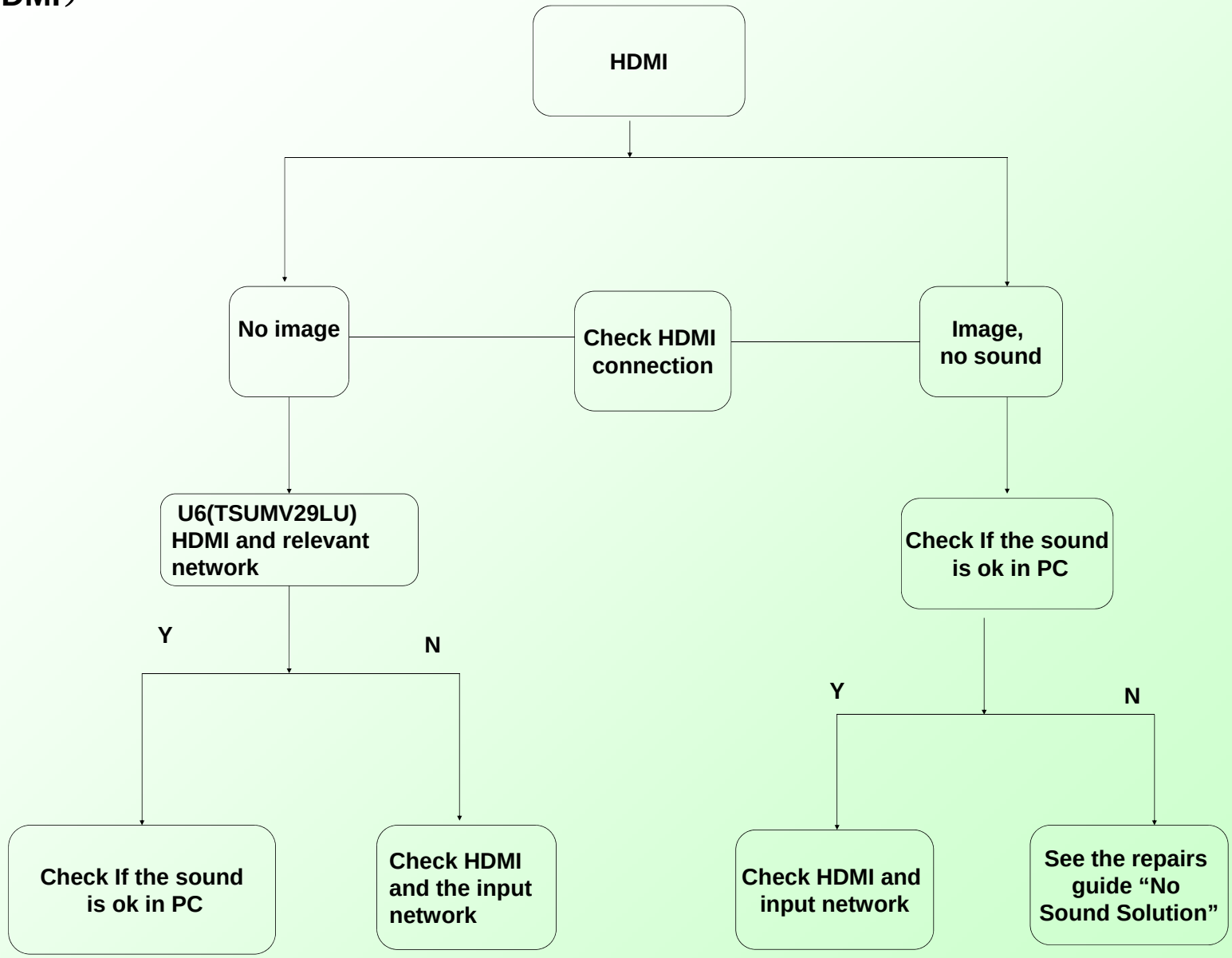

Figure.10 Function Unit
（YPBPR）

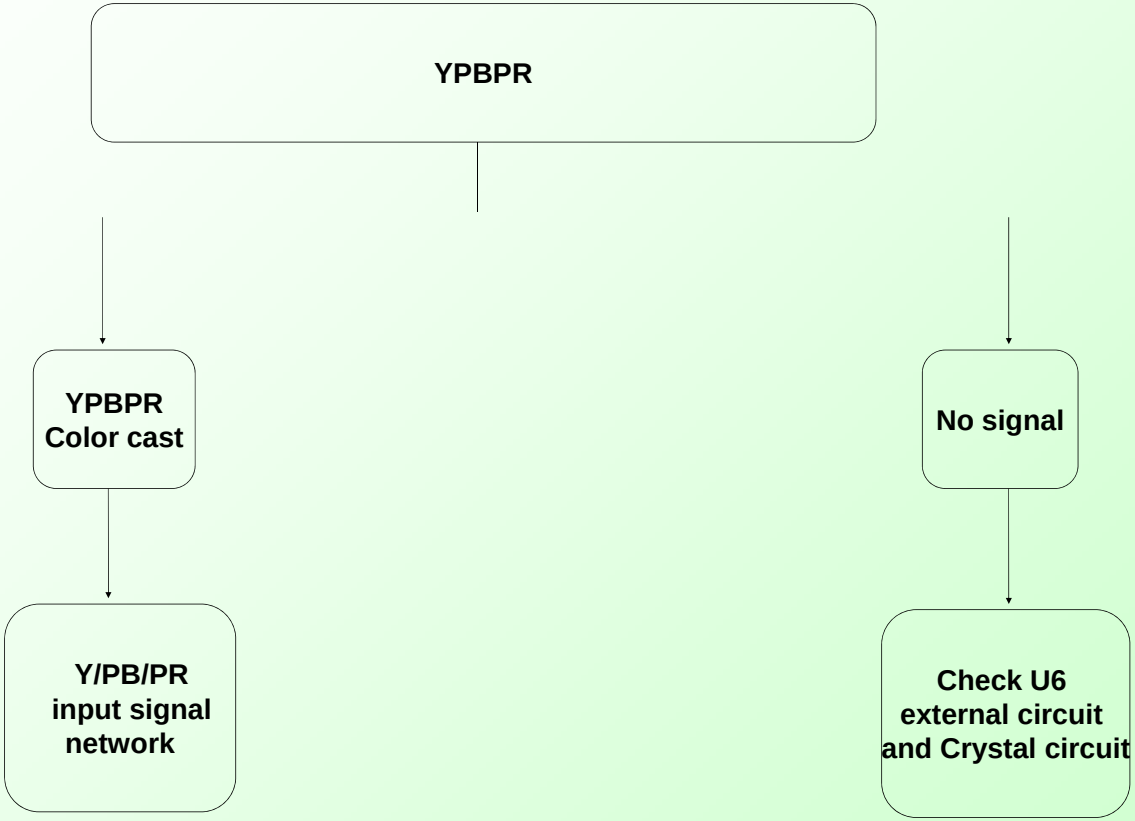

Doc. Number:

☐ Tentative Specification
■ Preliminary Specification
☐ Approval Specification

MODEL NO.: N156BGE
SUFFIX: L21

Customer:

APPROVED BY **SIGNATURE**

Name / Title _____ _____
Note

Please return 1 copy for your confirmation with your signature and comments.

Approved By	Checked By	Prepared By
楊竣傑 2011-01-10 11:13:00 CST	陳逸銘 2011-01-10 08:04:46 CST	王淑玲 2010-12-20 17:19:10 CST

The copyright belongs to CHIMEI InnoLux. Any unauthorized use is prohibited.

CONTENTS

1. GENERAL DESCRIPTION 4
1.1 OVERVIEW 4
1.2 GENERAL SPECIFICATI0NS 4
2. MECHANICAL SPECIFICATIONS 4
2.1 CONNECTOR TYPE 4
3. ABSOLUTE MAXIMUM RATINGS 5
3.1 ABSOLUTE RATINGS OF ENVIRONMENT 5
3.2 ELECTRICAL ABSOLUTE RATINGS 5
3.2.1 TFT LCD MODULE 5
4. ELECTRICAL SPECIFICATIONS 6
4.1 FUNCTION BLOCK DIAGRAM 6
4.2. INTERFACE CONNECTIONS 6
4.3 ELECTRICAL CHARACTERISTICS 8
4.3.1 LCD ELETRONICS SPECIFICATION 8
4.3.2 LED CONVERTER SPECIFICATION 10
4.3.3 BACKLIGHT UNIT 12
4.4 LVDS INPUT SIGNAL TIMING SPECIFICATIONS 13
4.4.1 LVDS DC SPECIFICATIONS 13
4.4.2 LVDS DATA FORMAT 13
4.4.3 COLOR DATA INPUT ASSIGNMENT 14
4.5 DISPLAY TIMING SPECIFICATIONS 15
4.6 POWER ON/OFF SEQUENCE 16
5. OPTICAL CHARACTERISTICS 17
5.1 TEST CONDITIONS 17
5.2 OPTICAL SPECIFICATIONS 17
6. RELIABILITY TEST ITEM 20
7. PACKING 22
7.1 MODULE LABEL 22
7.2 CARTON 23
7.3 PALLET 24
8. PRECAUTIONS 25
8.1 HANDLING PRECAUTIONS 25
8.2 STORAGE PRECAUTIONS 25
8.3 OPERATION PRECAUTIONS 25
Appendix. EDID DATA STRUCTURE 26
Appendix. OUTLINE DRAWING 29

The copyright belongs to CHIMEI InnoLux. Any unauthorized use is prohibited.

REVISION HISTORY

Version	Date	Page	Description
1.0	Aug.09, 2010	All	Spec Ver.1.0 was first issued.

The copyright belongs to CHIMEI InnoLux. Any unauthorized use is prohibited.

1. GENERAL DESCRIPTION

1.1 OVERVIEW

N156BGE-L21 is a 15.6" (15.547" diagonal) TFT Liquid Crystal Display module with LED Backlight unit and 40 pins LVDS interface. This module supports 1366 x 768 HD mode and can display 262,144 colors. The optimum viewing angle is at 6 o'clock direction.

1.2 GENERAL SPECIFICATI0NS

Item	Specification	Unit	Note
Screen Size	15.547 diagonal		
Driver Element	a-si TFT active matrix	-	-
Pixel Number	1366 x R.G.B. x 768	pixel	-
Pixel Pitch	0.252 (H) x 0.252 (V)	mm	-
Pixel Arrangement	RGB vertical stripe	-	-
Display Colors	262,144	color	-
Transmissive Mode	Normally white	-	-
Surface Treatment	Hard coating (3H), Glare	-	-
Luminance, White	220	Cd/m2	
Power Consumption	Total 5.184 W (Max.) @ cell 0.9 W (Max.), BL 4.284W (Max.)		(1)

Note (1) The specified power consumption (with converter efficiency) is under the conditions at VCCS = 3.3 V, fv = 60 Hz, LED_VCCS = Typ, fPWM = 200 Hz, Duty=100% and Ta = 25 ± 2 ºC, whereas mosaic pattern is displayed.

2. MECHANICAL SPECIFICATIONS

Item		Min.	Typ.	Max.	Unit	Note
Module Size	Horizontal (H)	358.8	359.3	359.8	mm	(1)
	Vertical (V)	209	209.5	210	mm	
	Thickness (T)	-	5.2	5.5	mm	
Bezel Area	Horizontal	349.28	349.58	349.88	mm	
	Vertical	197.99	198.29	198.59	mm	
Active Area	Horizontal	-	344.232	-	mm	
	Vertical	-	193.536	-	mm	
Weight		-	430	445	g	

Note (1) Please refer to the attached drawings for more information of front and back outline dimensions.

2.1 CONNECTOR TYPE

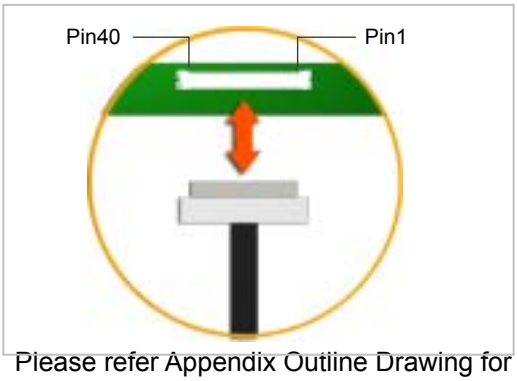

Please refer Appendix Outline Drawing for detail design.

Connector Part No.: IPEX-20455-040E-12 or equivalent

User's connector Part No: IPEX-20453-040T-01 or equivalent

The copyright belongs to CHIMEI InnoLux. Any unauthorized use is prohibited.

3. ABSOLUTE MAXIMUM RATINGS

3.1 ABSOLUTE RATINGS OF ENVIRONMENT

Item	Symbol	Value		Unit	Note
		Min.	Max.		
Storage Temperature	T_{ST}	-20	+60	ºC	(1)
Operating Ambient Temperature	T_{OP}	0	+50	ºC	(1), (2)

Note (1) (a) 90 %RH Max. (Ta <= 40 ºC).

(b) Wet-bulb temperature should be 39 ºC Max. (Ta > 40 ºC).

(c) No condensation.

Note (2) The temperature of panel surface should be 0 ºC min. and 60 ºC max.

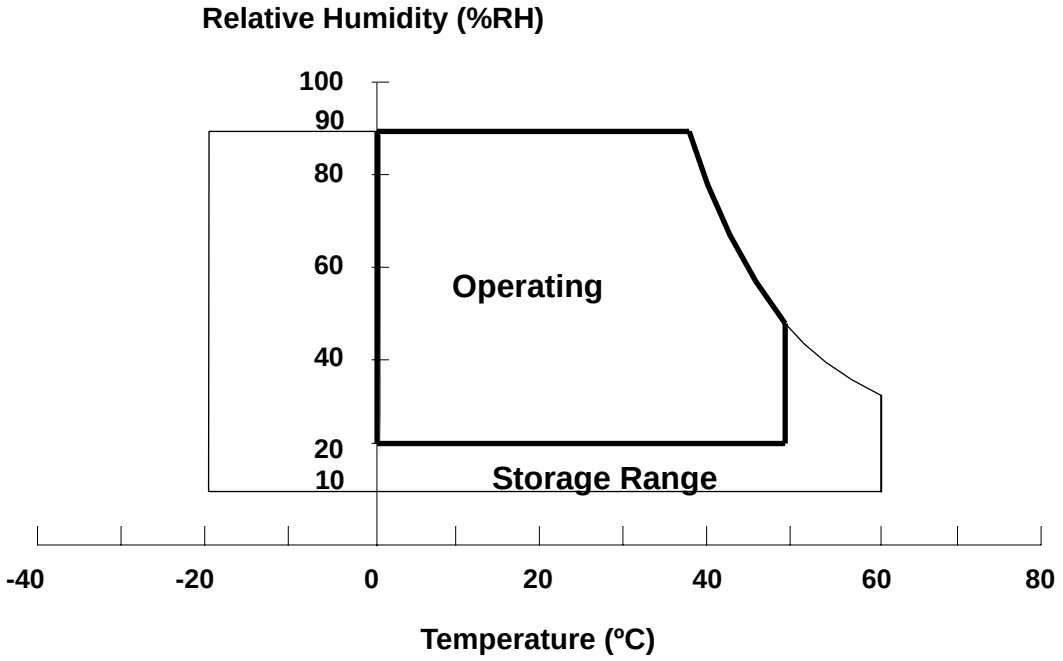

3.2 ELECTRICAL ABSOLUTE RATINGS

3.2.1 TFT LCD MODULE

Item	Symbol	Value		Unit	Note
		Min.	Max.		
Power Supply Voltage	VCCS	-0.3	+4.0	V	(1)
Logic Input Voltage	V_{IN}	-0.3	VCCS+0.3	V	
Converter Input Voltage	LED_VCCS	-0.3	24	V	(1)
Converter Control Signal Voltage	LED_PWM,	-0.3	5	V	(1)
Converter Control Signal Voltage	LED_EN	-0.3	5	V	(1)

Note (1) Stresses beyond those listed in above “ELECTRICAL ABSOLUTE RATINGS” may cause permanent damage to the device. Normal operation should be restricted to the conditions described in “ELECTRICAL CHARACTERISTICS”.

The copyright belongs to CHIMEI InnoLux. Any unauthorized use is prohibited.

4. ELECTRICAL SPECIFICATIONS

4.1 FUNCTION BLOCK DIAGRAM

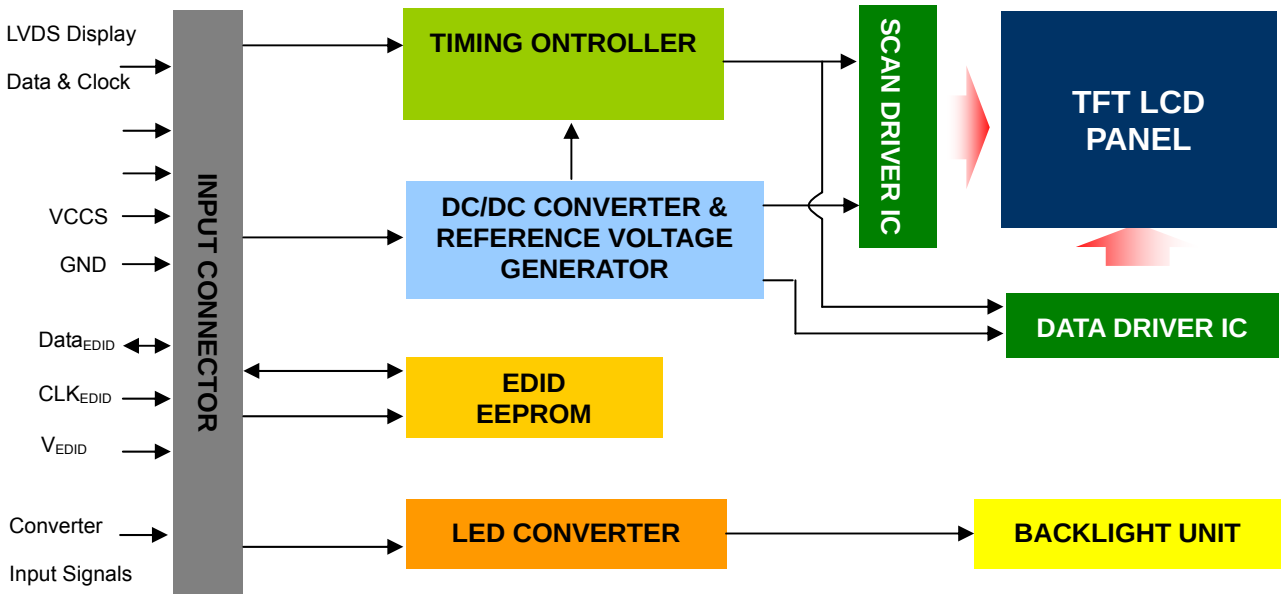

4.2. INTERFACE CONNECTIONS

PIN ASSIGNMENT

Pin	Symbol	Description	Remark
1	NC	No Connection (Reserve)	
2	VCCS	Power Supply (3.3V typ.)	
3	VCCS	Power Supply (3.3V typ.)	
4	VEDID	DDC 3.3V power	
5	NC	No Connection (Reserved for CMI test)	
6	CLKEDID	DDC clock	
7	DATAEDID	DDC data	
8	Rxin0-	LVDS differential data input	R0-R5, G0
9	Rxin0+	LVDS differential data input	
10	VSS	Ground	
11	Rxin1-	LVDS differential data input	G1~G5, B0, B1
12	Rxin1+	LVDS differential data input	
13	VSS	Ground	
14	Rxin2-	LVDS Differential Data Input	B2-B5,HS,VS, DE
15	Rxin2+	LVDS Differential Data Input	
16	VSS	Ground	
17	RxCLK-	LVDS differential clock input	LVDS CLK
18	RxCLK+	LVDS differential clock input	
19	VSS	Ground	
20	NC	No Connection (Reserve)	
21	NC	No Connection (Reserve)	
22	VSS	Ground	
23	NC	No Connection (Reserve)	

The copyright belongs to CHIMEI InnoLux. Any unauthorized use is prohibited.

24	NC	No Connection (Reserve)	
25	VSS	Ground	
26	NC	No Connection (Reserve)	
27	NC	No Connection (Reserve)	
28	VSS	Ground	
29	NC	No Connection (Reserve)	
30	NC	No Connection (Reserve)	
31	LED_GND	LED Ground	
32	LED_GND	LED Ground	
33	LED_GND	LED Ground	
34	NC	No Connection (Reserve)	
35	LED_PWM	PWM Control Signal of LED Converter	
36	LED_EN	Enable Control Signal of LED Converter	
37	NC	No Connection (Reserve)	
38	LED_VCCS	LED Power Supply	
39	LED_VCCS	LED Power Supply	
40	LED_VCCS	LED Power Supply	

Note (1) The first pixel is odd as shown in the following figure.

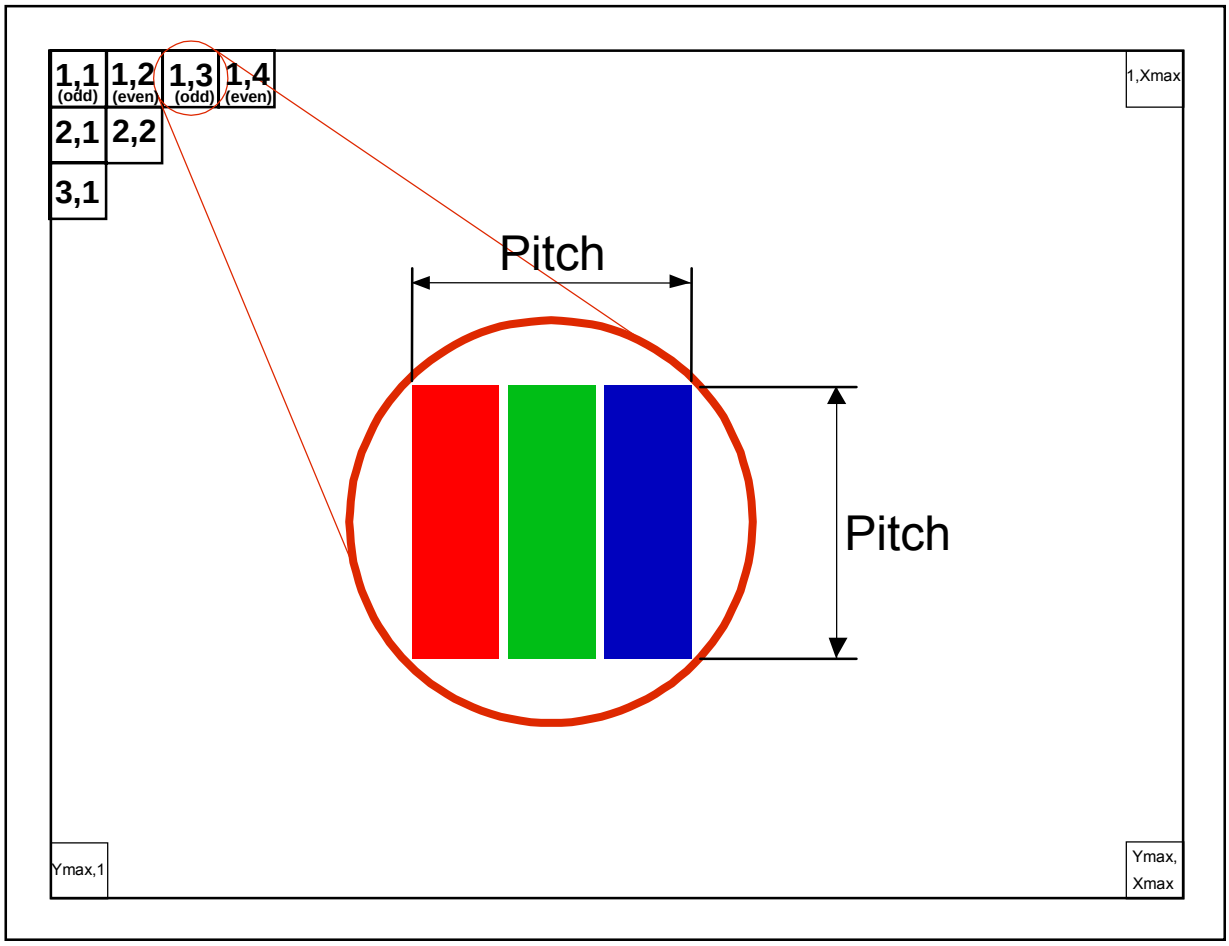

The copyright belongs to CHIMEI InnoLux. Any unauthorized use is prohibited.

4.3 ELECTRICAL CHARACTERISTICS

4.3.1 LCD ELETRONICS SPECIFICATION

Parameter		Symbol	Value			Unit	Note
			Min.	Typ.	Max.		
Power Supply Voltage		VCCS	3.0	3.3	3.6	V	(1)-
Ripple Voltage		V_{RP}	-	50	-	mV	(1)-
Inrush Current		I_{RUSH}	-	-	1.5	A	(1),(2)
Power Supply Current	Mosaic	Icc	253	288	323	mA	(3)a
	Black		320	360	400	mA	(3)b

Note (1) The ambient temperature is Ta = 25 ± 2 ºC.

Note (2) I_{RUSH}: the maximum current when VCCS is rising

I_{IS}: the maximum current of the first 100ms after power-on

Measurement Conditions: Shown as the following figure. Test pattern: black.

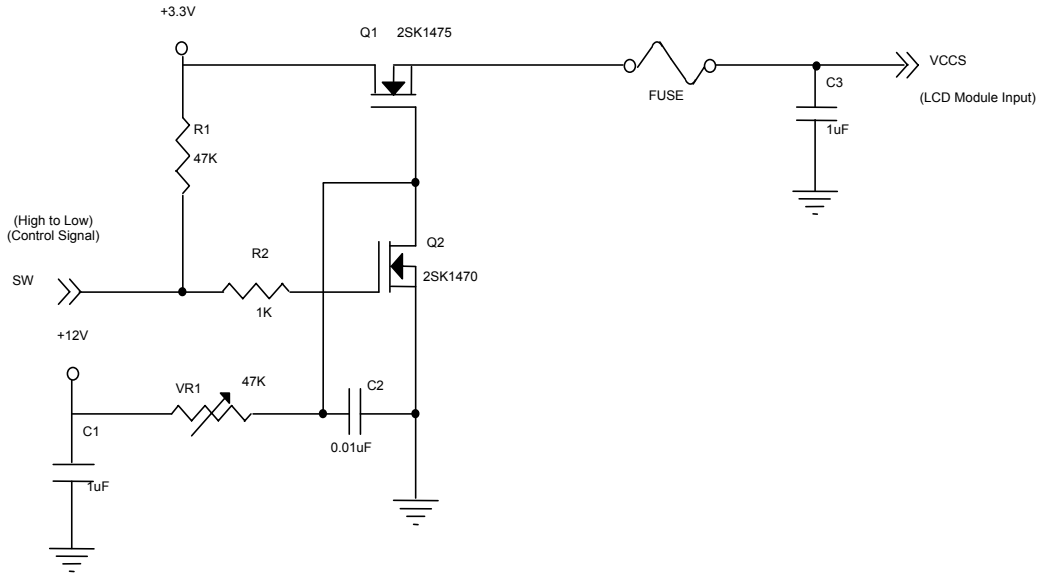

VCCS rising time is 0.5ms

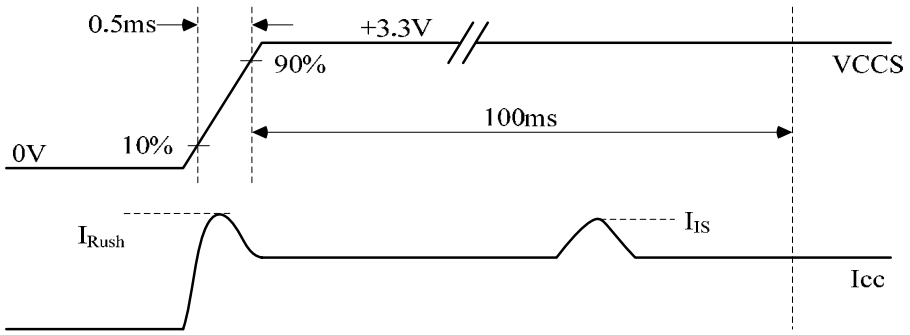

The copyright belongs to CHIMEI InnoLux. Any unauthorized use is prohibited.

Note (3) The specified power supply current is under the conditions at VCCS = 3.3 V, Ta = 25 ± 2 ºC, DC Current and f_v = 60 Hz, whereas a power dissipation check pattern below is displayed.

a. Mosaic Pattern

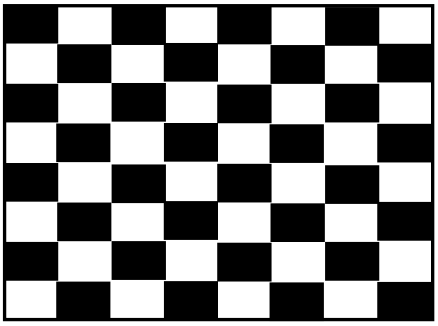

Active Area

b. Black Pattern

Active Area

The copyright belongs to CHIMEI InnoLux. Any unauthorized use is prohibited.

4.3.2 LED CONVERTER SPECIFICATION

Parameter		Symbol	Value			Unit	Note
			Min.	Typ.	Max.		
Converter Input power supply voltage		LED_Vccs	6.0	12.0	21.0	V	
Converter Inrush Current		$ILED_{RUSH}$	-	-	1.5	A	(1)
EN Control Level	Backlight On		2.3	-	5	V	
	Backlight Off		0	-	0.5	V	
PWM Control Level	PWM High Level		2.3	-	5	V	
	PWM Low Level		0	-	0.5	V	
PWM Control Duty Ratio			10	-	100	%	
			5	-	100	%	(2)
PWM Control Permissive Ripple Voltage		VPWM_pp	-	-	100	mV	
PWM Control Frequency		f_{PWM}	190	-	2K	Hz	(3)
LED Power Current	LED_VCCS =Typ.	ILED	253	301	357	mA	(4)

Note (1) $ILED_{RUSH}$: the maximum current when LED_VCCS is rising,

$ILED_{IS}$: the maximum current of the first 100ms after power-on,

Measurement Conditions: Shown as the following figure. LED_VCCS = Typ, Ta = 25 ± 2 ºC, f_{PWM} = 200 Hz, Duty=100%.

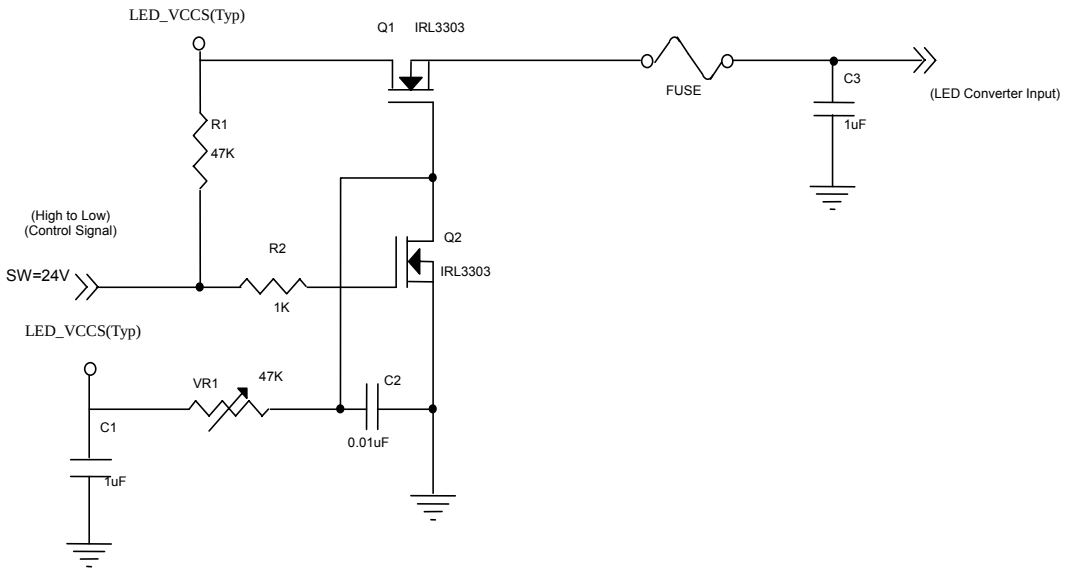

The copyright belongs to CHIMEI InnoLux. Any unauthorized use is prohibited.

VLED rising time is 0.5ms

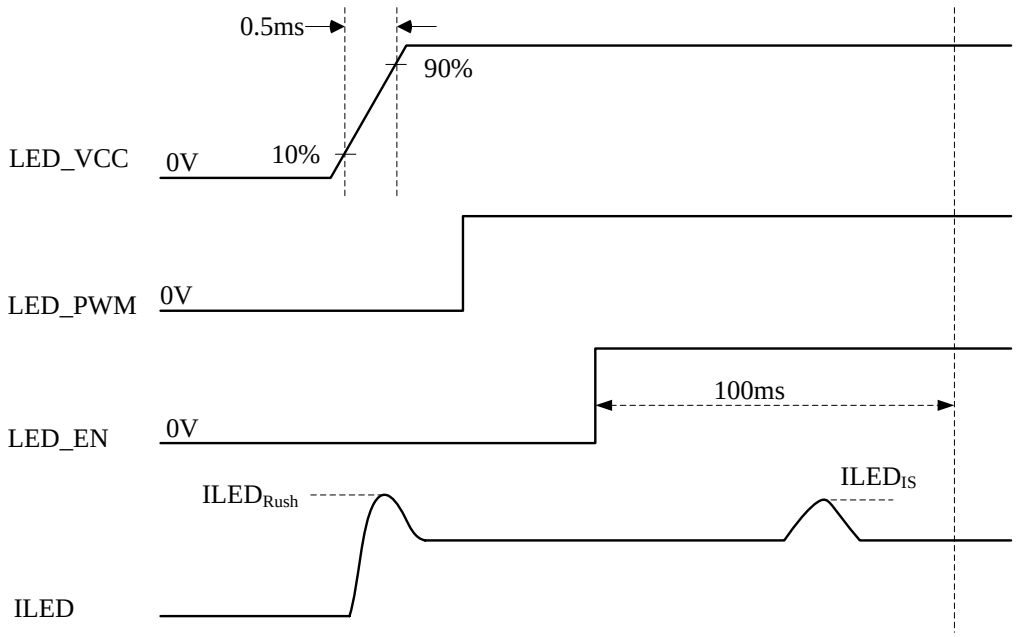

Note (2) If the PWM control duty ratio is less than 10%, there is some possibility that acoustic noise or backlight flash can be found. And it is also difficult to control the brightness linearity.

Note (3) If PWM control frequency is applied in the range less than 1KHz, the "waterfall" phenomenon on the screen may be found. To avoid the issue, it's a suggestion that PWM control frequency should follow the criterion as below.

PWM control frequency f_{PWM} should be in the range

$$(N+0.33)*f \le f_{PWM} \le (N+0.66)*f$$

N : Integer $(N \ge 3)$

f : Frame rate

Note (4) The specified LED power supply current is under the conditions at "LED_VCCS = Typ.", Ta = 25 ± 2 ºC, f_{PWM} = 200 Hz, Duty=100%.

The copyright belongs to CHIMEI InnoLux. Any unauthorized use is prohibited.

4.3.3 BACKLIGHT UNIT

Ta = 25 ± 2 ºC

Parameter	Symbol	Value			Unit	Note
		Min.	Typ.	Max.		
LED Light Bar Power Supply Voltage	V_L	22.4	25.6	27.2	V	(1)(2)(Duty100%)
LED Light Bar Power Supply Current	I_L	114	120	126	mA	
Power Consumption	P_L	2.55	3.07	3.43	W	(3)
LED Life Time	L_{BL}	15000	-	-	Hrs	(4)

Note (1) LED current is measured by utilizing a high frequency current meter as shown below :

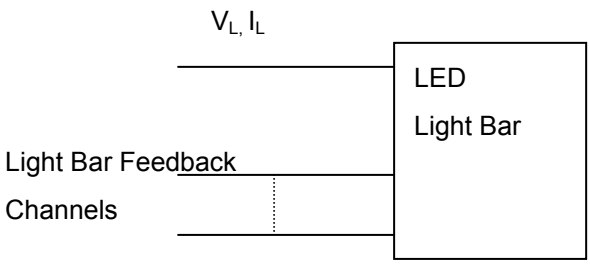

Note (2) For better LED light bar driving quality, it is recommended to utilize the adaptive boost converter with current balancing function to drive LED light-bar.

Note (3) $P_L = I_L \times V_L$ (Without LED converter transfer efficiency)

Note (4) The lifetime of LED is defined as the time when it continues to operate under the conditions at Ta = 25 ±2 °C and I_L = 24 mA(Per EA) until the brightness becomes ≦ 50% of its original value.

The copyright belongs to CHIMEI InnoLux. Any unauthorized use is prohibited.

4.4 LVDS INPUT SIGNAL TIMING SPECIFICATIONS

4.4.1 LVDS DC SPECIFICATIONS

Parameter	Symbol	Value			Unit	Note
		Min.	Typ.	Max.		
LVDS Differential Input High Threshold	$V_{TH(LVDS)}$	-	-	+100	mV	(1), V_{CM}=1.2V
LVDS Differential Input Low Threshold	$V_{TL(LVDS)}$	-100	-	-	mV	(1) V_{CM}=1.2V
LVDS Common Mode Voltage	V_{CM}	1.125	-	1.375	V	(1)
LVDS Differential Input Voltage	$\|V_{ID}\|$	100	-	600	mV	(1)
LVDS Terminating Resistor	R_T	-	100	-	Ohm	-

Note (1) The parameters of LVDS signals are defined as the following figures.

Single Ended

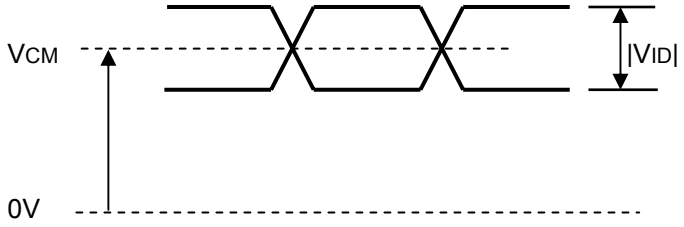

Differential

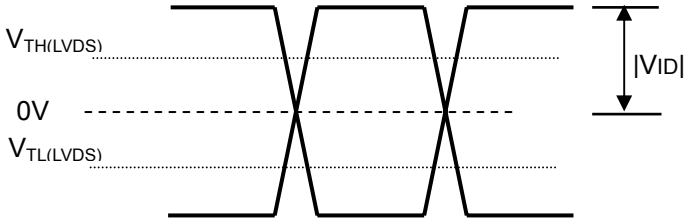

4.4.2 LVDS DATA FORMAT

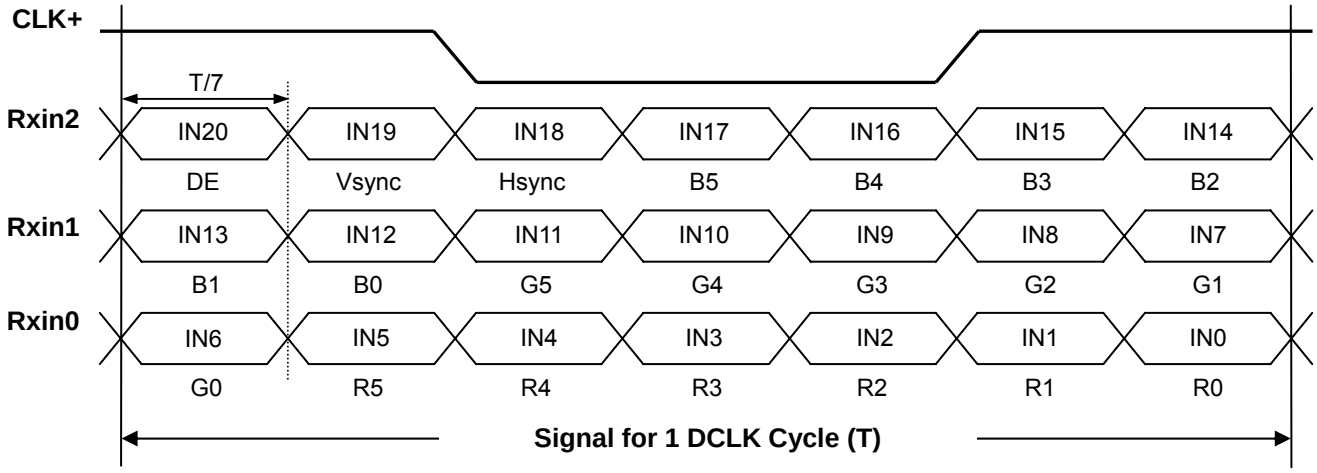

The copyright belongs to CHIMEI InnoLux. Any unauthorized use is prohibited.

4.4.3 COLOR DATA INPUT ASSIGNMENT

The brightness of each primary color (red, green and blue) is based on the 6-bit gray scale data input for the color. The higher the binary input the brighter the color. The table below provides the assignment of color versus data input.

Color		Data Signal																	
		Red						Green						Blue					
		R5	R4	R3	R2	R1	R0	G5	G4	G3	G2	G1	G0	B5	B4	B3	B2	B1	B0
Basic Colors	Black	0	0	0	0	0	0	0	0	0	0	0	0	0	0	0	0	0	0
	Red	1	1	1	1	1	1	0	0	0	0	0	0	0	0	0	0	0	0
	Green	0	0	0	0	0	0	1	1	1	1	1	1	0	0	0	0	0	0
	Blue	0	0	0	0	0	0	0	0	0	0	0	0	1	1	1	1	1	1
	Cyan	0	0	0	0	0	0	1	1	1	1	1	1	1	1	1	1	1	1
	Magenta	1	1	1	1	1	1	0	0	0	0	0	0	1	1	1	1	1	1
	Yellow	1	1	1	1	1	1	1	1	1	1	1	1	0	0	0	0	0	0
	White	1	1	1	1	1	1	1	1	1	1	1	1	1	1	1	1	1	1
Gray Scale Of Red	Red(0)/Dark	0	0	0	0	0	0	0	0	0	0	0	0	0	0	0	0	0	0
	Red(1)	0	0	0	0	0	1	0	0	0	0	0	0	0	0	0	0	0	0
	Red(2)	0	0	0	0	1	0	0	0	0	0	0	0	0	0	0	0	0	0
	:	:	:	:	:	:	:	:	:	:	:	:	:	:	:	:	:	:	:
	:	:	:	:	:	:	:	:	:	:	:	:	:	:	:	:	:	:	:
	Red(61)	1	1	1	1	0	1	0	0	0	0	0	0	0	0	0	0	0	0
	Red(62)	1	1	1	1	1	0	0	0	0	0	0	0	0	0	0	0	0	0
	Red(63)	1	1	1	1	1	1	0	0	0	0	0	0	0	0	0	0	0	0
Gray Scale Of Green	Green(0)/Dark	0	0	0	0	0	0	0	0	0	0	0	0	0	0	0	0	0	0
	Green(1)	0	0	0	0	0	0	0	0	0	0	0	1	0	0	0	0	0	0
	Green(2)	0	0	0	0	0	0	0	0	0	0	1	0	0	0	0	0	0	0
	:	:	:	:	:	:	:	:	:	:	:	:	:	:	:	:	:	:	:
	:	:	:	:	:	:	:	:	:	:	:	:	:	:	:	:	:	:	:
	Green(61)	0	0	0	0	0	0	1	1	1	1	0	1	0	0	0	0	0	0
	Green(62)	0	0	0	0	0	0	1	1	1	1	1	0	0	0	0	0	0	0
	Green(63)	0	0	0	0	0	0	1	1	1	1	1	1	0	0	0	0	0	0
Gray Scale Of Blue	Blue(0)/Dark	0	0	0	0	0	0	0	0	0	0	0	0	0	0	0	0	0	0
	Blue(1)	0	0	0	0	0	0	0	0	0	0	0	0	0	0	0	0	0	1
	Blue(2)	0	0	0	0	0	0	0	0	0	0	0	0	0	0	0	0	1	0
	:	:	:	:	:	:	:	:	:	:	:	:	:	:	:	:	:	:	:
	:	:	:	:	:	:	:	:	:	:	:	:	:	:	:	:	:	:	:
	Blue(61)	0	0	0	0	0	0	0	0	0	0	0	0	1	1	1	1	0	1
	Blue(62)	0	0	0	0	0	0	0	0	0	0	0	0	1	1	1	1	1	0
	Blue(63)	0	0	0	0	0	0	0	0	0	0	0	0	1	1	1	1	1	1

Note (1) 0: Low Level Voltage, 1: High Level Voltage

The copyright belongs to CHIMEI InnoLux. Any unauthorized use is prohibited.

4.5 DISPLAY TIMING SPECIFICATIONS

The input signal timing specifications are shown as the following table and timing diagram.

Refresh rate 60Hz

Signal	Item	Symbol	Min.	Typ.	Max.	Unit	Note
DCLK	Frequency	1/Tc	62.4	69.3	72.8	MHz	-
DE	Vertical Total Time	TV	772	788	793	TH	-
	Vertical Active Display Period	TVD	768	768	768	TH	-
	Vertical Active Blanking Period	TVB	TV-TVD	20	TV-TVD	TH	-
	Horizontal Total Time	TH	1456	1466	1492	Tc	-
	Horizontal Active Display Period	THD	1366	1366	1366	Tc	-
	Horizontal Active Blanking Period	THB	TH-THD	100	TH-THD	Tc	-

Note (1) Because this module is operated by DE only mode, Hsync and Vsync are ignored.

INPUT SIGNAL TIMING DIAGRAM

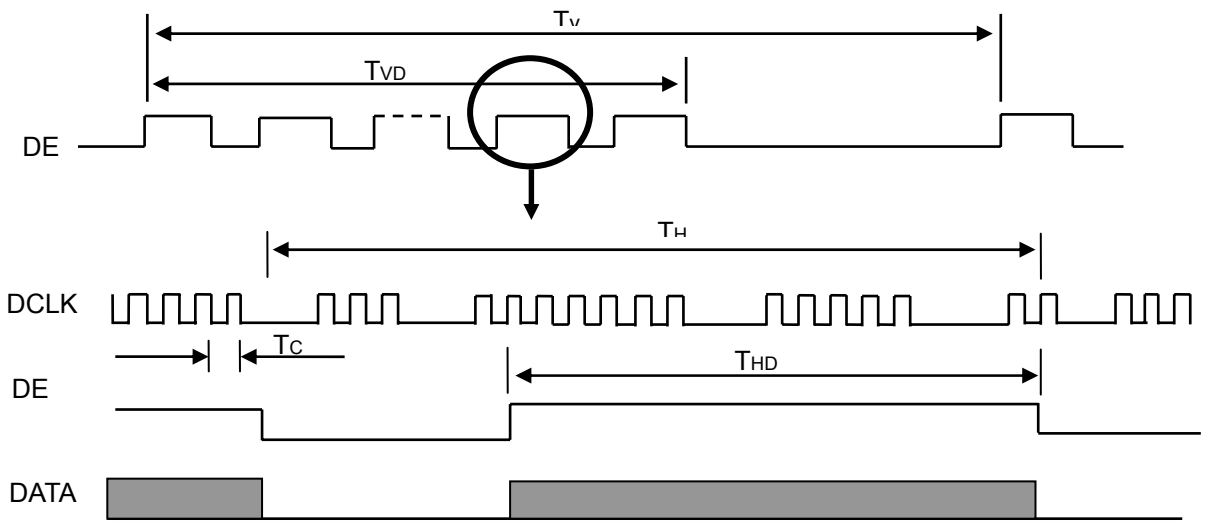

The copyright belongs to CHIMEI InnoLux. Any unauthorized use is prohibited.

4.6 POWER ON/OFF SEQUENCE

The power sequence specifications are shown as the following table and diagram.

Symbol	Value			Unit	Note
	Min.	Typ.	Max.		
t1	0.5	-	10	ms	
t2	0	-	50	ms	
t3	0	-	50	ms	
t4	500	-	-	ms	
t5	200	-	-	ms	
t6	200	-	-	ms	
t7	0.5	-	10	ms	
t_A	0.5	-	10	ms	
t_B	0		10	ms	
t_C	10	-	-	ms	
t_D	10	-	-	ms	
t_E	10	-	-	ms	
t_F	10	-	-	ms	

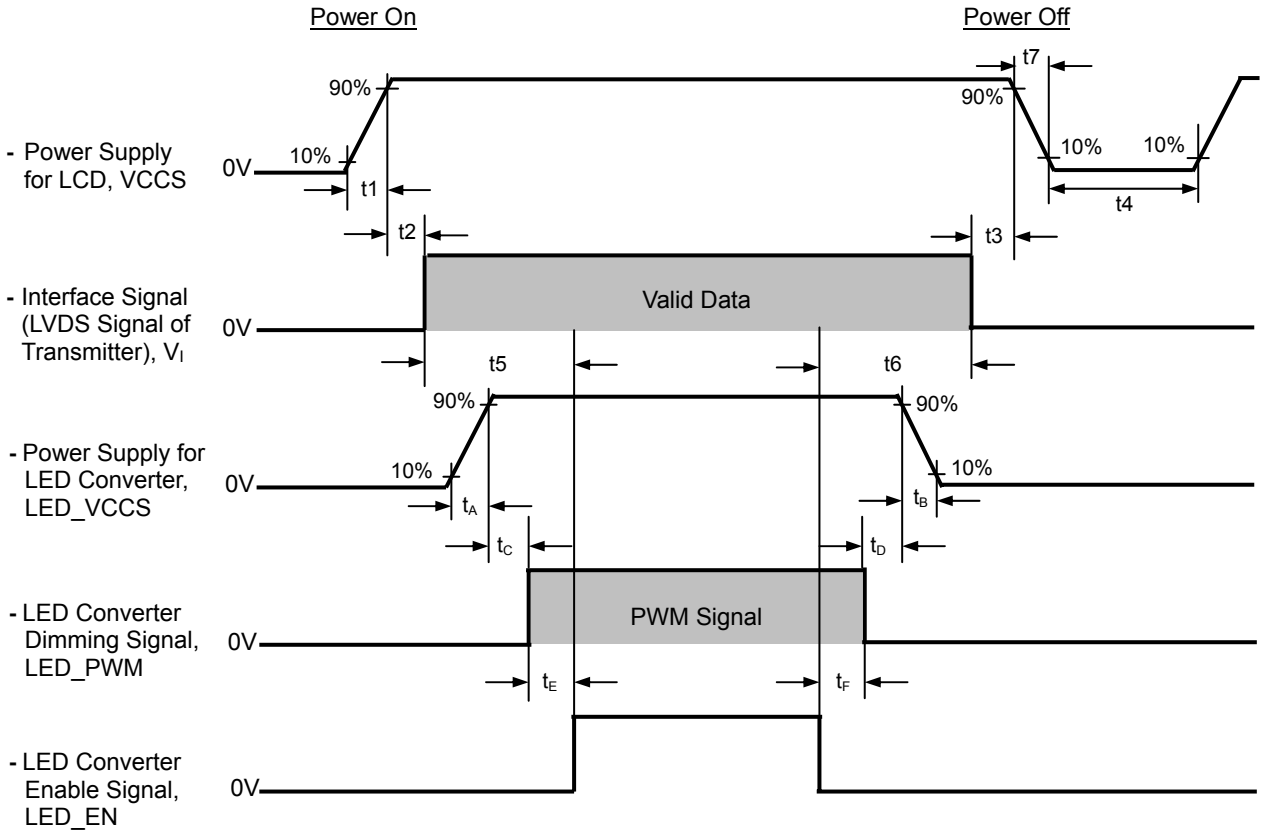

Note (1) Please don't plug or unplug the interface cable when system is turned on.

Note (2) Please avoid floating state of the interface signal during signal invalid period.

Note (3) It is recommended that the backlight power must be turned on after the power supply for LCD and the interface signal is valid.

The copyright belongs to CHIMEI InnoLux. Any unauthorized use is prohibited.

5. OPTICAL CHARACTERISTICS

5.1 TEST CONDITIONS

Item	Symbol	Value	Unit
Ambient Temperature	Ta	25±2	°C
Ambient Humidity	Ha	50±10	%RH
Supply Voltage	V_{CC}	3.3	V
Input Signal	According to typical value in "3. ELECTRICAL CHARACTERISTICS"		
LED Light Bar Input Current	I_L	120	mA

The measurement methods of optical characteristics are shown in Section 5.2. The following items should be measured under the test conditions described in Section 5.1 and stable environment shown in Note (5).

5.2 OPTICAL SPECIFICATIONS

Item		Symbol	Condition	Min.	Typ.	Max.	Unit	Note
Contrast Ratio		CR	θ_x=0°, θ_Y =0° Viewing Normal Angle	500	650	-	-	(2),(5),(8)
Response Time		T_R		-	3	8	ms	(3),(8)
		T_F		-	8	13	ms	
Luminance of White (5P)		L_{AVE}		185	220	-	cd/m^2	(4),(5),(8)
White Variation (5P)		δW		80	--		%	(5),(6),(8)
White Variation (13P)		δW		65	--		%	(5),(6),(8)
Color gamut		C.G		55	60		%	(5),(7),(8)
Color Chromaticity	Red	Rx		Typ.-0.03	0.617	Typ.+0.03	-	(1), (5) (8)
		Ry			0.340		-	
	Green	Gx			0.320		-	
		Gy			0.598		-	
	Blue	Bx			0.160		-	
		By			0.084		-	
	White	Wx			0.313		-	
		Wy			0.329		-	
Viewing Angle	Horizontal	θ_x+	CR≥10	40	45	-	Deg.	(1),(5),(8)
		θ_x-		40	45	-		
	Vertical	θ_Y+		15	20	-		
		θ_Y-		40	45	-		

The copyright belongs to CHIMEI InnoLux. Any unauthorized use is prohibited.

Note (1) Definition of Viewing Angle (θx, θy)

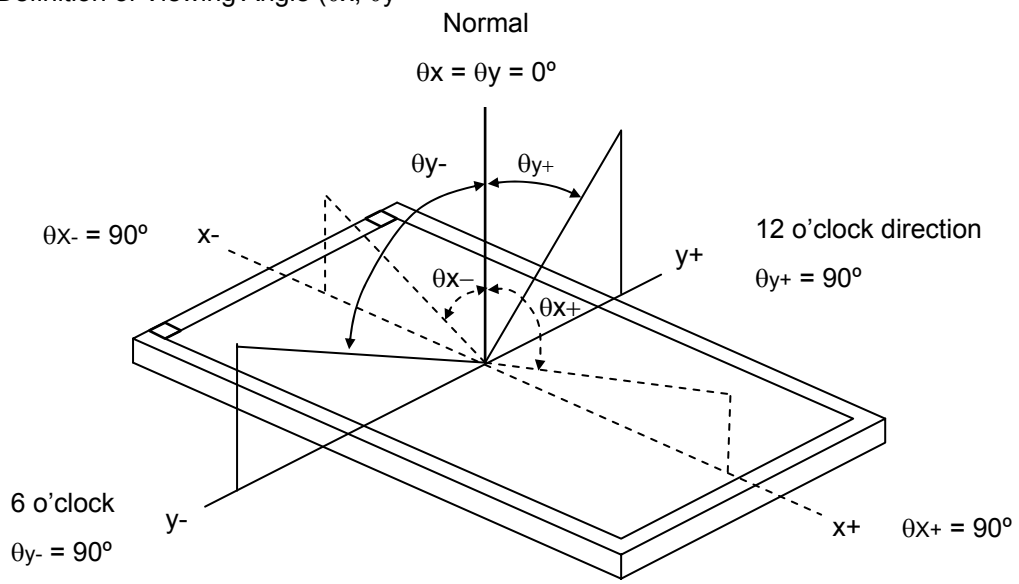

Note (2) Definition of Contrast Ratio (CR):

The contrast ratio can be calculated by the following expression.

Contrast Ratio (CR) = L63 / L0

L63: Luminance of gray level 63

L 0: Luminance of gray level 0

CR = CR (1)

CR (X) is corresponding to the Contrast Ratio of the point X at Figure in Note (6).

Note (3) Definition of Response Time (T_R, T_F):

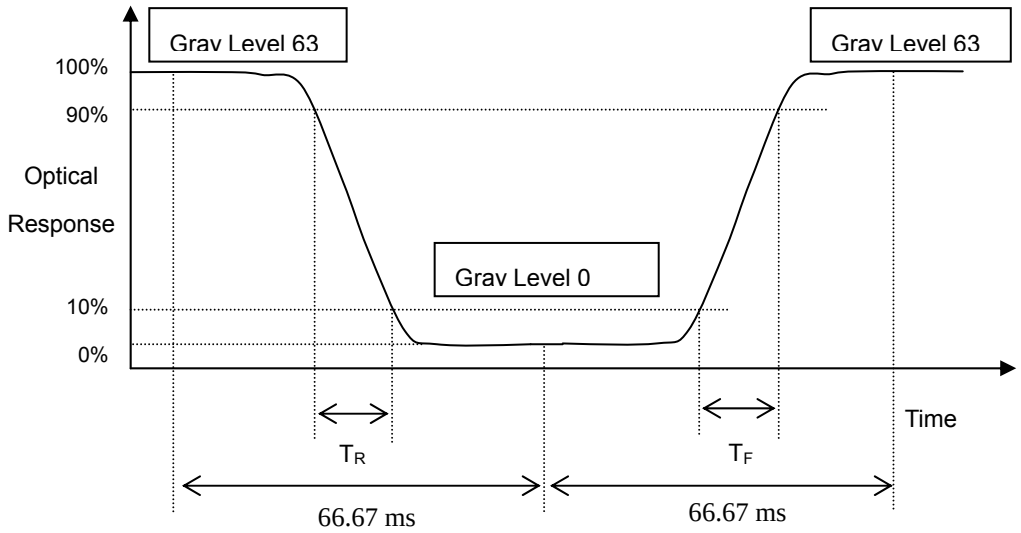

The copyright belongs to CHIMEI InnoLux. Any unauthorized use is prohibited.

Note (4) Definition of Average Luminance of White (L_{AVE}):

Measure the luminance of gray level 63 at 5 points

L_{AVE} = [L (1)+ L (2)+ L (3)+ L (4)+ L (5)] / 5

L (x) is corresponding to the luminance of the point X at Figure in Note (6)

Note (5) Measurement Setup:

The LCD module should be stabilized at given temperature for 20 minutes to avoid abrupt temperature change during measuring. In order to stabilize the luminance, the measurement should be executed after lighting Backlight for 20 minutes in a windless room.

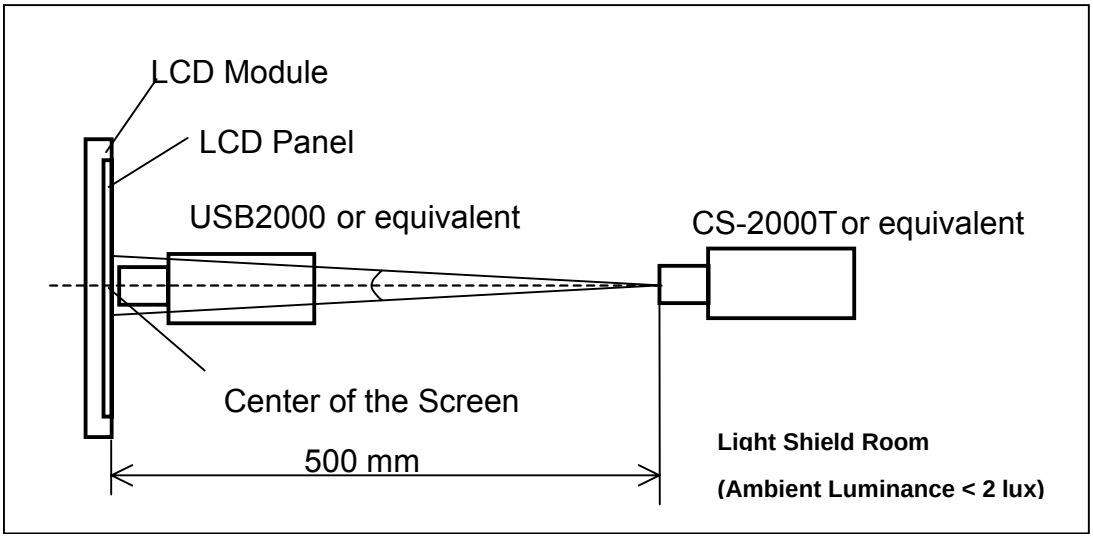

ote (6) Definition of White Variation (δW):

Measure the luminance of gray level 63 at 5 points

δW_{5p} = {Minimum [L (1)~ L (5)] / Maximum [L (1)~ L (5)]}*100%

δW_{13p} = {Minimum [L (1)~ L (13)] / Maximum [L (1)~ L (13)]}*100%

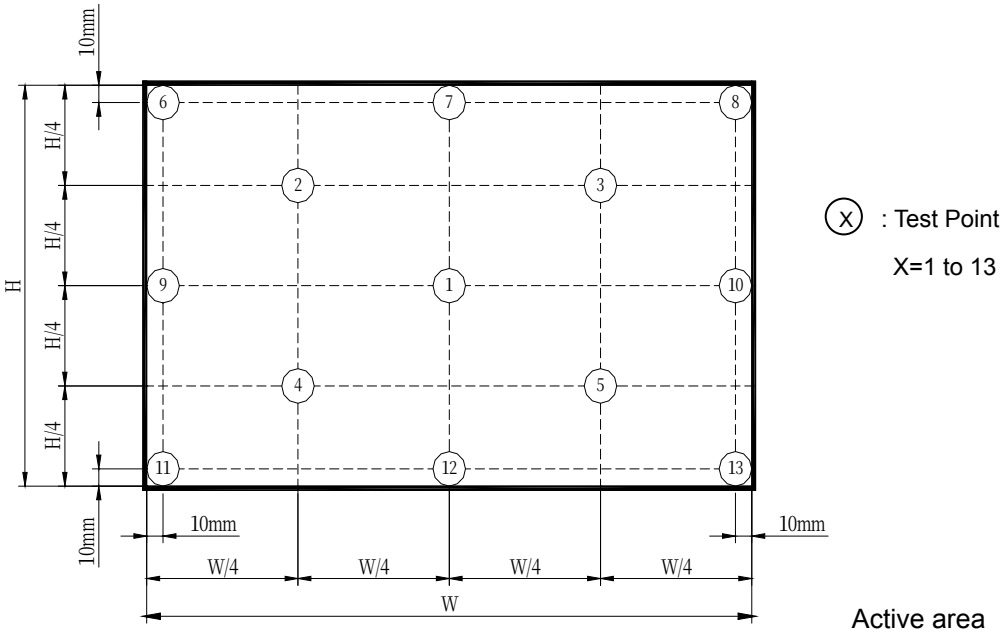

The copyright belongs to CHIMEI InnoLux. Any unauthorized use is prohibited.

Note (7) Definition of color gamut (C.G%):

C.G%= R G B / R_0 G_0 B_0,*100%

R_0, G_0, B_0 : color coordinates of red, green, and blue defined by NTSC, respectively.

R, G, B : color coordinates of module on 63 gray levels of red, green, and blue, respectively.

R_0 G_0 B_0 : area of triangle defined by R_0, G_0, B_0

- R G B: area of triangle defined by R, G, B

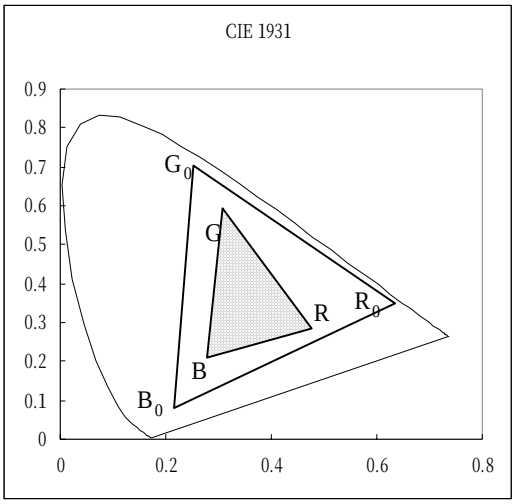

Note (8) The listed optical specifications refer to the initial value of manufacture, but the condition of the specifications after long-term operation will not be warranted.

The copyright belongs to CHIMEI InnoLux. Any unauthorized use is prohibited.

6. RELIABILITY TEST ITEM

Test Item	Test Condition	Note
High Temperature Storage Test	60ºC, 240 hours	(1) (2)
Low Temperature Storage Test	-20ºC, 240 hours	
Thermal Shock Storage Test	-20ºC, 0.5hour←→60℃, 0.5hour; 100cycles, 1hour/cycle	
High Temperature Operation Test	50ºC, 240 hours	
Low Temperature Operation Test	0ºC, 240 hours	
High Temperature & High Humidity Operation Test	50ºC, RH 80%, 240hours	
ESD Test (Operation)	150pF, 330Ω, 1sec/cycle Condition 1 : Contact Discharge, ±8KV Condition 2 : Air Discharge, ±15KV	(1)
Shock (Non-Operating)	220G, 2ms, half sine wave,1 time for each direction of ±X,±Y,±Z	(1)(3)
Vibration (Non-Operating)	1.5G / 10-500 Hz, Sine wave, 30 min/cycle, 1cycle for each X, Y, Z	(1)(3)

Note (1) criteria : Normal display image with no obvious non-uniformity and no line defect.

Note (2) Evaluation should be tested after storage at room temperature for more than two hour

Note (3) At testing Vibration and Shock, the fixture in holding the module has to be hard and rigid enough so that the module would not be twisted or bent by the fixture.

The copyright belongs to CHIMEI InnoLux. Any unauthorized use is prohibited.

7. PACKING

7.1 MODULE LABEL

The barcode nameplate is pasted on each module as illustration, and its definitions are as following explanation.

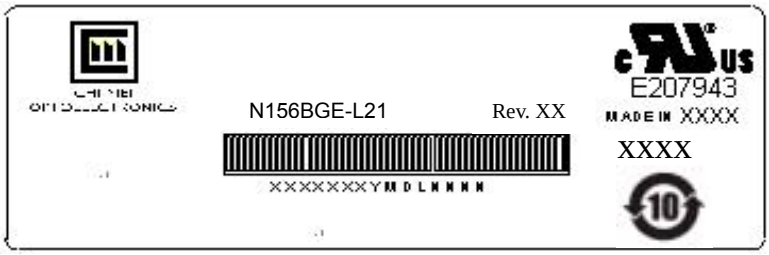

(a) Model Name: N156BGE - L21

(b) Revision: Rev. XX, for example: C1, C2 …etc.

(c) Serial ID: X X X X X X X Y M D L N N N N

- N N N N: Serial No.
- L: Product Line
- Y M D: Year, Month, Date
- X X X X: CMO Internal Use
- X X: Revision
- X: CMO Internal Use

Serial ID includes the information as below:

(a) Manufactured Date: Year: 0~9, for 2010~2019

Month: 1~9, A~C, for Jan. ~ Dec.

Day: 1~9, A~Y, for 1st to 31st, exclude I , O and U

(b) Revision Code: cover all the change

(c) Serial No.: Manufacturing sequence of product

(d) Product Line: 1 -> Line1, 2 -> Line 2, …etc.

The copyright belongs to CHIMEI InnoLux. Any unauthorized use is prohibited.

7.2 CARTON

Box Dimensions : 442(L)*392(W)*300(H)
Weight: Approx. 10.5kg(20 module .per. 1 box)

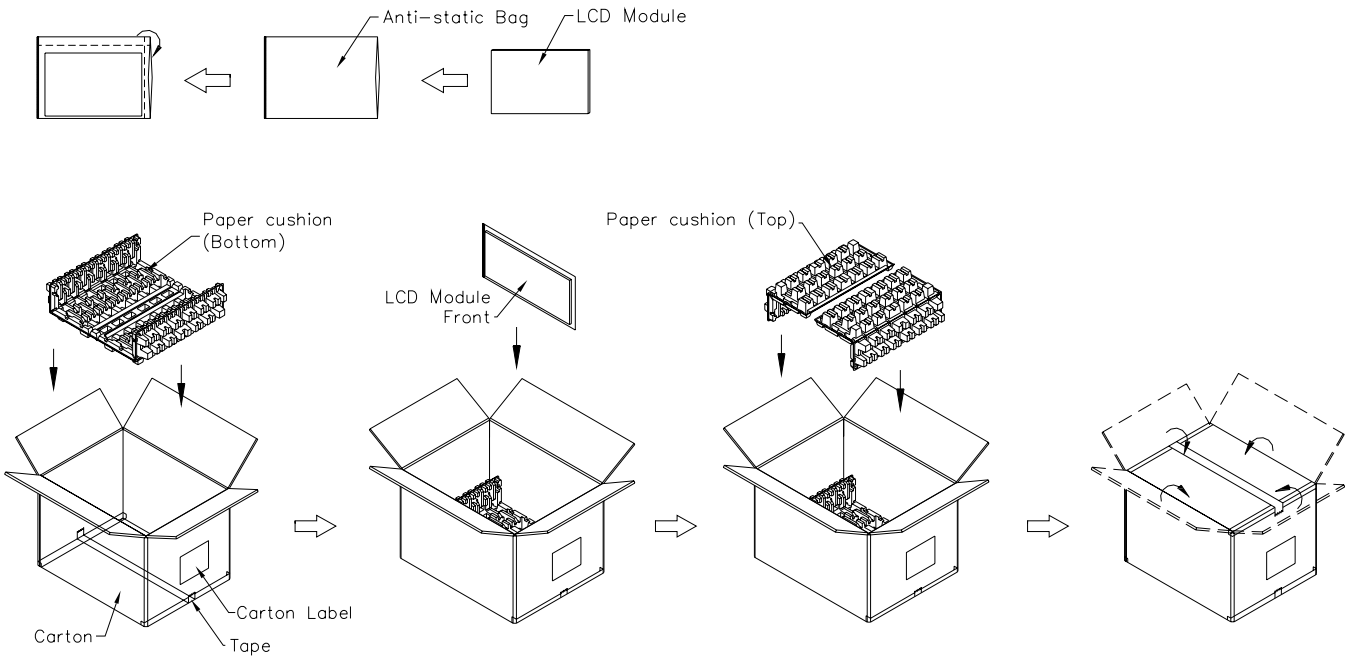

Figure. 7-2 Packing method

The copyright belongs to CHIMEI InnoLux. Any unauthorized use is prohibited.

7.3 PALLET

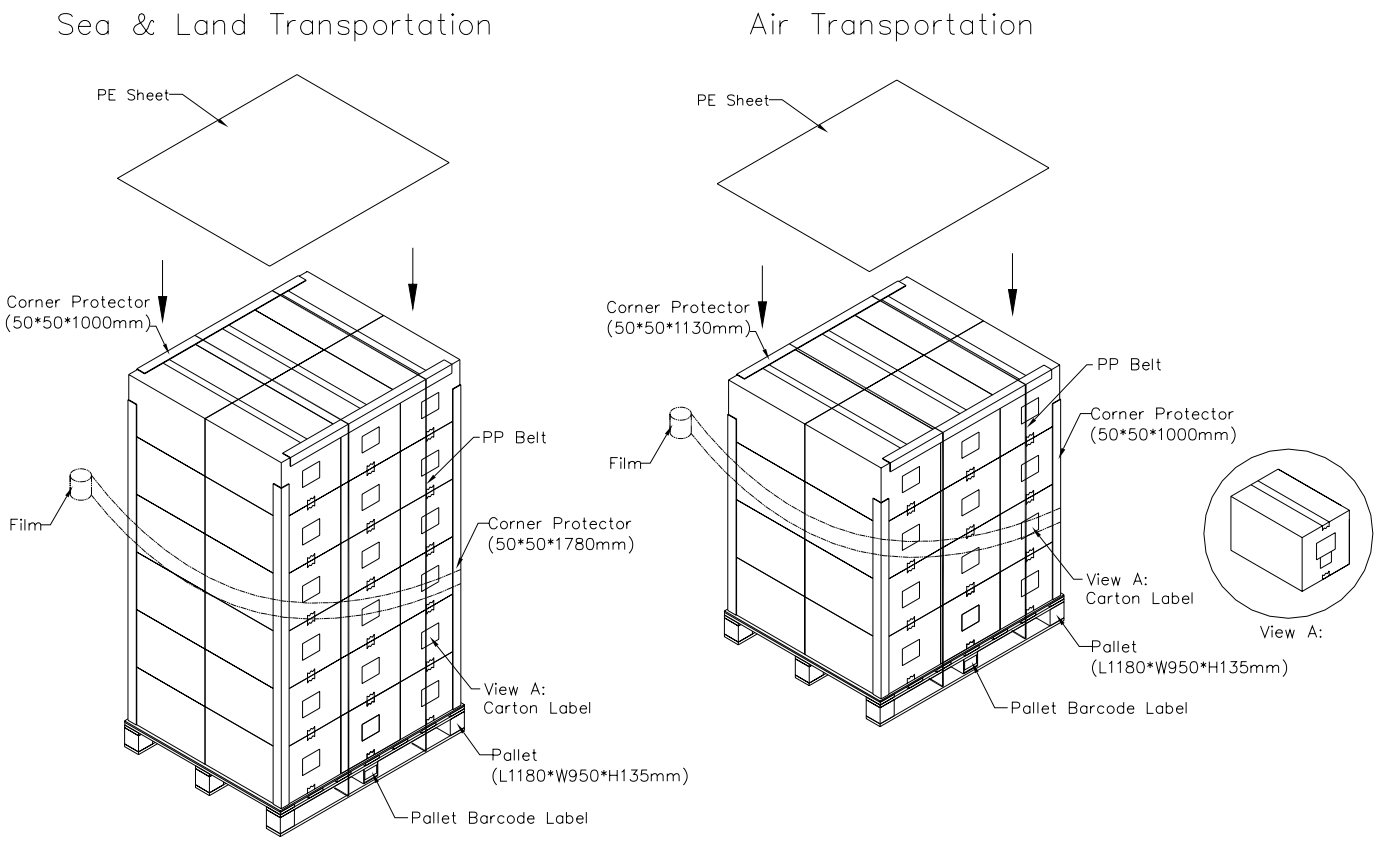

Figure. 7-3 Packing method

The copyright belongs to CHIMEI InnoLux. Any unauthorized use is prohibited.

8. PRECAUTIONS

8.1 HANDLING PRECAUTIONS

(1) The module should be assembled into the system firmly by using every mounting hole. Be careful not to twist or bend the module.

(2) While assembling or installing modules, it can only be in the clean area. The dust and oil may cause electrical short or damage the polarizer.

(3) Use fingerstalls or soft gloves in order to keep display clean during the incoming inspection and assembly process.

(4) Do not press or scratch the surface harder than a HB pencil lead on the panel because the polarizer is very soft and easily scratched.

(5) If the surface of the polarizer is dirty, please clean it by some absorbent cotton or soft cloth. Do not use Ketone type materials (ex. Acetone), Ethyl alcohol, Toluene, Ethyl acid or Methyl chloride. It might permanently damage the polarizer due to chemical reaction.

(6) Wipe off water droplets or oil immediately. Staining and discoloration may occur if they left on panel for a long time.

(7) If the liquid crystal material leaks from the panel, it should be kept away from the eyes or mouth. In case of contacting with hands, legs or clothes, it must be washed away thoroughly with soap.

(8) Protect the module from static electricity, it may cause damage to the C-MOS Gate Array IC.

(9) Do not disassemble the module.

(10) Do not pull or fold the LED wire.

(11) Pins of I/F connector should not be touched directly with bare hands.

8.2 STORAGE PRECAUTIONS

(1) High temperature or humidity may reduce the performance of module. Please store LCD module within the specified storage conditions.

(2) It is dangerous that moisture come into or contacted the LCD module, because the moisture may damage LCD module when it is operating.

(3) It may reduce the display quality if the ambient temperature is lower than 10 ºC. For example, the response time will become slowly, and the starting voltage of LED will be higher than the room temperature.

8.3 OPERATION PRECAUTIONS

(1) Do not pull the I/F connector in or out while the module is operating.

(2) Always follow the correct power on/off sequence when LCD module is connecting and operating. This can prevent the CMOS LSI chips from damage during latch-up.

(3) The startup voltage of Backlight is approximately 1000 Volts. It may cause electrical shock while assembling with converter. Do not disassemble the module or insert anything into the Backlight unit.

The copyright belongs to CHIMEI InnoLux. Any unauthorized use is prohibited.

Appendix. EDID DATA STRUCTURE

The EDID (Extended Display Identification Data) data formats are to support displays as defined in the VESA Plug & Display and FPDI standards.

Byte # (decimal)	Byte # (hex)	Field Name and Comments	Value (hex)	Value (binary)
0	0	Header	00	00000000
1	1	Header	FF	11111111
2	2	Header	FF	11111111
3	3	Header	FF	11111111
4	4	Header	FF	11111111
5	5	Header	FF	11111111
6	6	Header	FF	11111111
7	7	Header	00	00000000
8	8	EISA ID manufacturer name (“CMO”)	0D	00001101
9	9	EISA ID manufacturer name (Compressed ASCII)	AF	10101111
10	0A	ID product code (N156BGE-L21)	A7	10100111
11	0B	ID product code (hex LSB first; N156BGE-L21)	15	00010101
12	0C	ID S/N (fixed “0”)	00	00000000
13	0D	ID S/N (fixed “0”)	00	00000000
14	0E	ID S/N (fixed “0”)	00	00000000
15	0F	ID S/N (fixed “0”)	00	00000000
16	10	Week of manufacture (fixed “00H”)	1F	00011111
17	11	Year of manufacture (fixed “00H”)	14	00010100
18	12	EDID structure version # (“1”)	01	00000001
19	13	EDID revision # (“3”)	03	00000011
20	14	Video I/P definition (“digital”)	80	10000000
21	15	Max H image size (“35cm”)	23	00100011
22	16	Max V image size (“19cm”)	13	00010011
23	17	Display Gamma (Gamma = ”2.2”)	78	01111000
24	18	Feature support (“Active off, RGB Color”)	0A	00001010
25	19	Red/Green (Rx1, Rx0, Ry1, Ry0, Gx1, Gx0, Gy1, Gy0)	00	00000000
26	1A	Blue/White (Bx1, Bx0, By1, By0, Wx1, Wx0, Wy1, Wy0)	25	00100101
27	1B	Red-x (Rx = “0.617”)	9E	10011110
28	1C	Red-y (Ry = “0.340”)	57	01010111
29	1D	Green-x (Gx = ”0.320”)	52	01010010
30	1E	Green-y (Gy = ”0.598”)	99	10011001
31	1F	Blue-x (Bx = ”0.160”)	29	00101001
32	20	Blue-y (By = ”0.084”)	15	00010101
33	21	White-x (Wx = ”0.313”)	50	01010000
34	22	White-y (Wy = ”0.329”)	54	01010100
35	23	Established timings 1	00	00000000
36	24	Established timings 2	00	00000000
37	25	Manufacturer’s reserved timings	00	00000000
38	26	Standard timing ID # 1	01	00000001
39	27	Standard timing ID # 1	01	00000001
40	28	Standard timing ID # 2	01	00000001
41	29	Standard timing ID # 2	01	00000001

The copyright belongs to CHIMEI InnoLux. Any unauthorized use is prohibited.

42	2A	Standard timing ID # 3	01	00000001
43	2B	Standard timing ID # 3	01	00000001
44	2C	Standard timing ID # 4	01	00000001
45	2D	Standard timing ID # 4	01	00000001
46	2E	Standard timing ID # 5	01	00000001
47	2F	Standard timing ID # 5	01	00000001
48	30	Standard timing ID # 6	01	00000001
49	31	Standard timing ID # 6	01	00000001
50	32	Standard timing ID # 7	01	00000001
51	33	Standard timing ID # 7	01	00000001
52	34	Standard timing ID # 8	01	00000001
53	35	Standard timing ID # 8	01	00000001
54	36	Detailed timing description # 1 Pixel clock (“69.3MHz”, According to VESA CVT Rev1.1)	12	00010010
55	37	# 1 Pixel clock (hex LSB first)	1B	00011011
56	38	# 1 H active (“1366”)	56	01010110
57	39	# 1 H blank (“100”)	64	01100100
58	3A	# 1 H active : H blank (“1366 :100”)	50	01010000
59	3B	# 1 V active (”768”)	00	00000000
60	3C	# 1 V blank (”20”)	14	00010100
61	3D	# 1 V active : V blank (”768 :20”)	30	00110000
62	3E	# 1 H sync offset (”16”)	10	00010000
63	3F	# 1 H sync pulse width ("34”)	22	00100010
64	40	# 1 V sync offset : V sync pulse width (”2 : 6”)	26	00100110
65	41	# 1 H sync offset : H sync pulse width : V sync offset : V sync width (”16: 34 : 2 : 6”)	00	00000000
66	42	# 1 H image size (”344 mm”)	58	01011000
67	43	# 1 V image size (”193 mm”)	C1	11000001
68	44	# 1 H image size : V image size (”344 : 193”)	10	00010000
69	45	# 1 H boarder (”0”)	00	00000000
70	46	# 1 V boarder (”0”)	00	00000000
71	47	# 1 Non-interlaced, Normal, no stereo, Separate sync, H/V pol Negatives	18	00011000
72	48	Detailed timing description # 2	00	00000000
73	49	# 2 Flag	00	00000000
74	4A	# 2 Reserved	00	00000000
75	4B	# 2 FE (hex) defines ASCII string (Model Name “N156BGE-L21”, ASCII)	FE	11111110
76	4C	# 2 Flag	00	00000000
77	4D	# 2 1st character of name (“N”)	4E	01001110
78	4E	# 2 2nd character of name (“1”)	31	00110001
79	4F	# 2 3rd character of name (“5”)	35	00110101
80	50	# 2 4th character of name (“6”)	36	00110110
81	51	# 2 5th character of name (“B”)	42	01000010
82	52	# 2 6th character of name (“G”)	47	01000111
83	53	# 2 7th character of name (“E”)	45	01000101
84	54	# 2 8th character of name (“-”)	2D	00101101
85	55	# 2 9th character of name (“L”)	4C	01001100

The copyright belongs to CHIMEI InnoLux. Any unauthorized use is prohibited.

86	56	# 2 9th character of name (“2”)	32	00110010
87	57	# 2 Ath character of name (“1”)	31	00110001
88	58	# 2 New line character indicates end of ASCII string	0A	00001010
89	59	# 2 Padding with “Blank” character	20	00100000
90	5A	Detailed timing description # 3	00	00000000
91	5B	# 3 Flag	00	00000000
92	5C	# 3 Reserved	00	00000000
93	5D	# 3 FE (hex) defines ASCII string (Vendor “CMO”, ASCII)	FE	11111110
94	5E	# 3 Flag	00	00000000
95	5F	# 3 1st character of string (“C”)	43	01000011
96	60	# 3 2nd character of string (“M”)	4D	01001101
97	61	# 3 3rd character of string (“O”)	4F	01001111
98	62	# 3 New line character indicates end of ASCII string	0A	00001010
99	63	# 3 Padding with “Blank” character	20	00100000
100	64	# 3 Padding with “Blank” character	20	00100000
101	65	# 3 Padding with “Blank” character	20	00100000
102	66	# 3 Padding with “Blank” character	20	00100000
103	67	# 3 Padding with “Blank” character	20	00100000
104	68	# 3 Padding with “Blank” character	20	00100000
105	69	# 3 Padding with “Blank” character	20	00100000
106	6A	# 3 Padding with “Blank” character	20	00100000
107	6B	# 3 Padding with “Blank” character	20	00100000
108	6C	Detailed timing description # 4	00	00000000
109	6D	# 4 Flag	00	00000000
110	6E	# 4 Reserved	00	00000000
111	6F	# 4 FE (hex) defines ASCII string (Model Name“N156BGE-L21”, ASCII)	FE	11111110
112	70	# 4 Flag	00	00000000
113	71	# 4 1st character of name (“N”)	4E	01001110
114	72	# 4 2nd character of name (“1”)	31	00110001
115	73	# 4 3rd character of name (“5”)	35	00110101
116	74	# 4 4th character of name (“6”)	36	00110110
117	75	# 4 5th character of name (“B”)	42	01000010
118	76	# 4 6th character of name (“G”)	47	01000111
119	77	# 4 7th character of name (“E”)	45	01000101
120	78	# 4 8th character of name (“-”)	2D	00101101
121	79	# 4 9th character of name (“L”)	4C	01001100
122	7A	# 4 9th character of name (“2”)	32	00110010
123	7B	# 4 Ath character of name (“1”)	31	00110001
124	7C	# 4 New line character indicates end of ASCII string	0A	00001010
125	7D	# 4 Padding with “Blank” character	20	00100000
126	7E	Extension flag	00	00000000
127	7F	Checksum	95	10010101

The copyright belongs to CHIMEI InnoLux. Any unauthorized use is prohibited.

Appendix. OUTLINE DRAWING

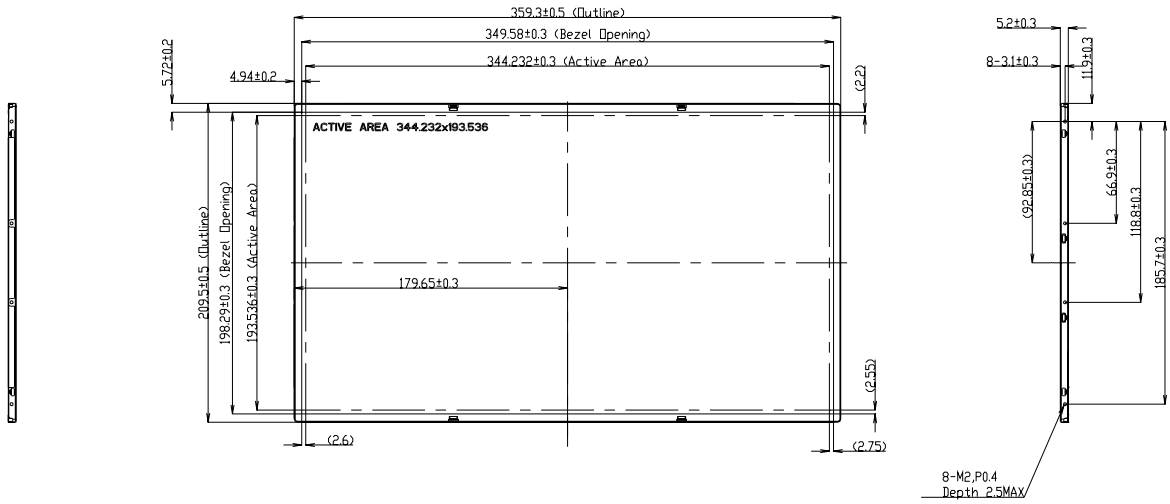

NOTES:
1.Max screw length: 2.5mm.
2.Screw torque: 2.3~2.5 kgf-cm.
3.LCD module input connector: I-PEX 20455-040E-12 or Tyco 5-2069716-3 .
4.Gap between bezel and panel: 0.5mm MAX.
5.In order to avoid abnormal display, pooling and white spot, no overlapping is suggested at cables, antennas, camera, WLAN, WAN or other foreign objects over COF driver IC, TCON and VR locations.
6.Max module flatness: 0.5mm.
7. "( )" MARKS THE REFERENCE DIMENSIONS.

The copyright belongs to CHIMEI InnoLux. Any unauthorized use is prohibited.

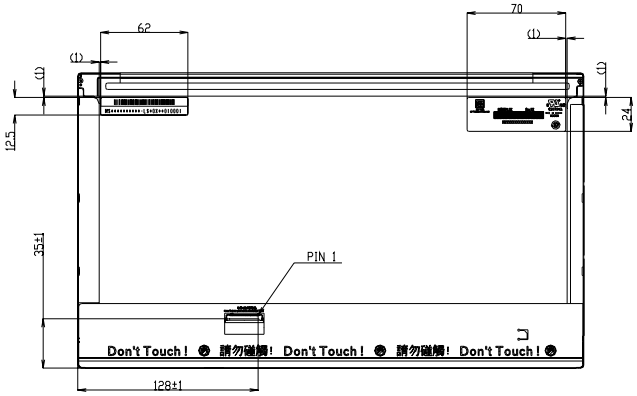

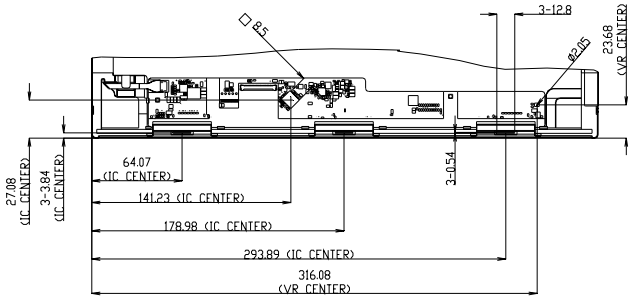

The copyright belongs to CHIMEI InnoLux. Any unauthorized use is prohibited.