Service Manual

Part1: Exploded View

Part2: Circuit Diagram

Part3: Common problems solution

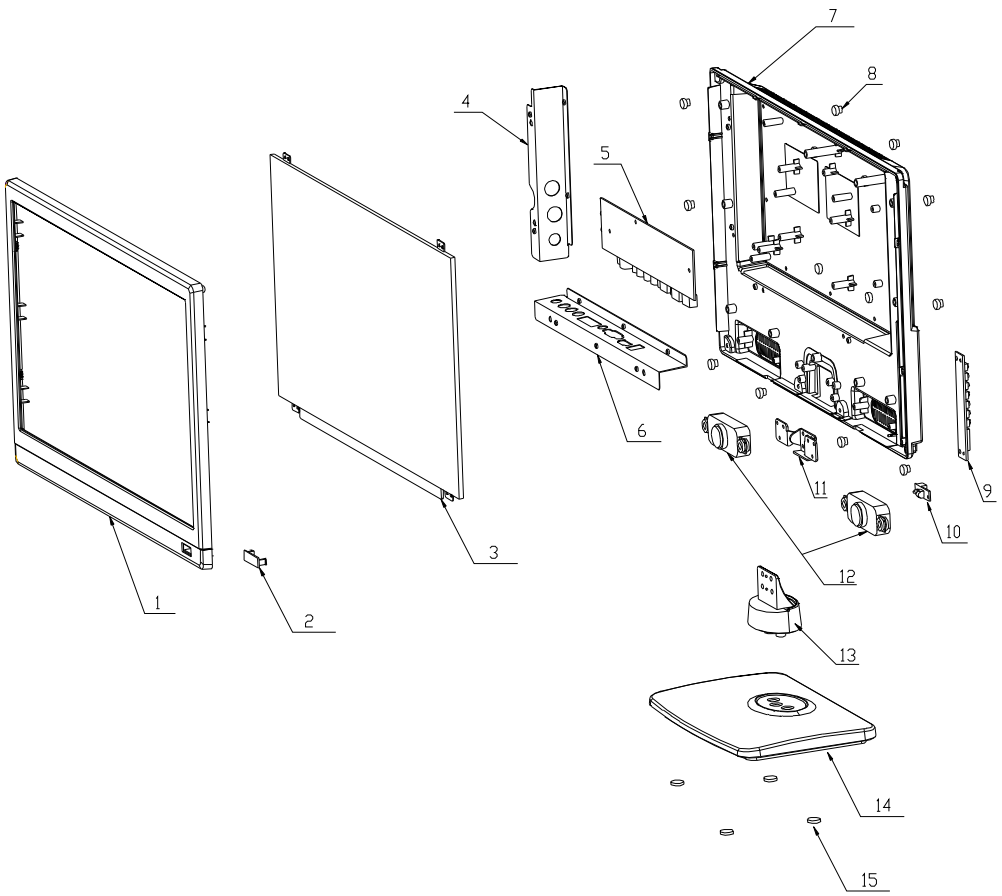

1	Front Cabinet	9	Key Board
2	LED	10	Remote Receiver board
3	Panel	11	Hinge
4	Bottom Terminal Sheet	12	Speaker
5	Main board	13	Stand Neck
6	Side Terminal Sheet	14	Base Stand
7	Rear Cabinet	15	Rubber
8	Panel Supporting Sheet		

LE156S86

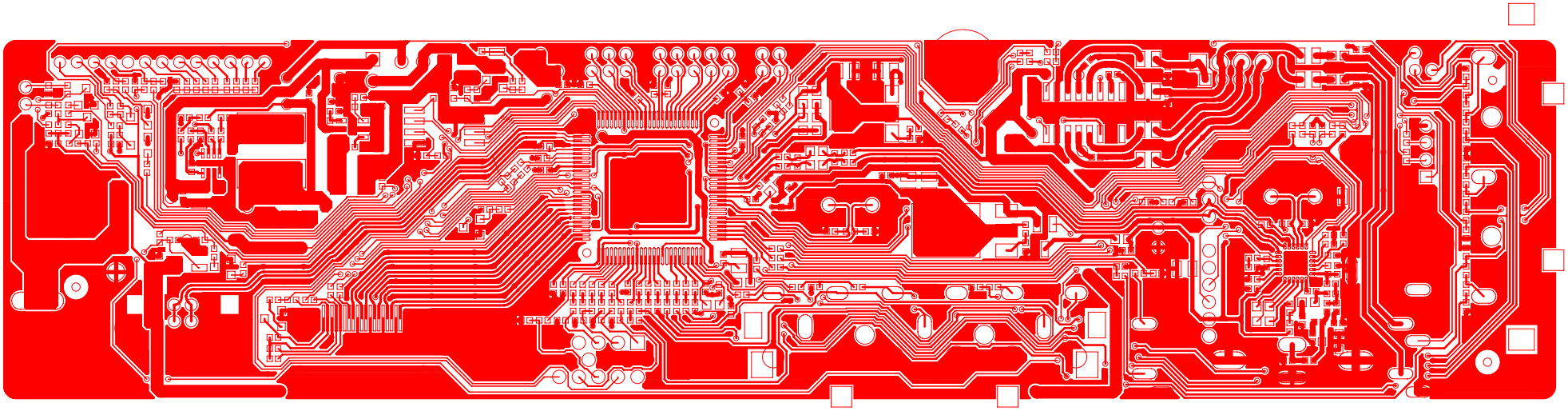

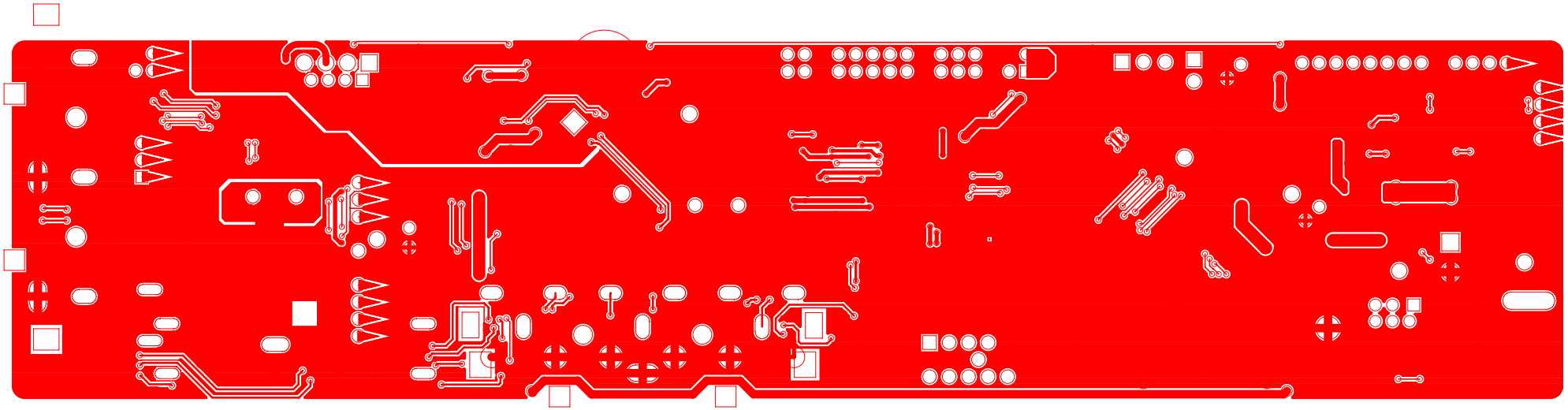

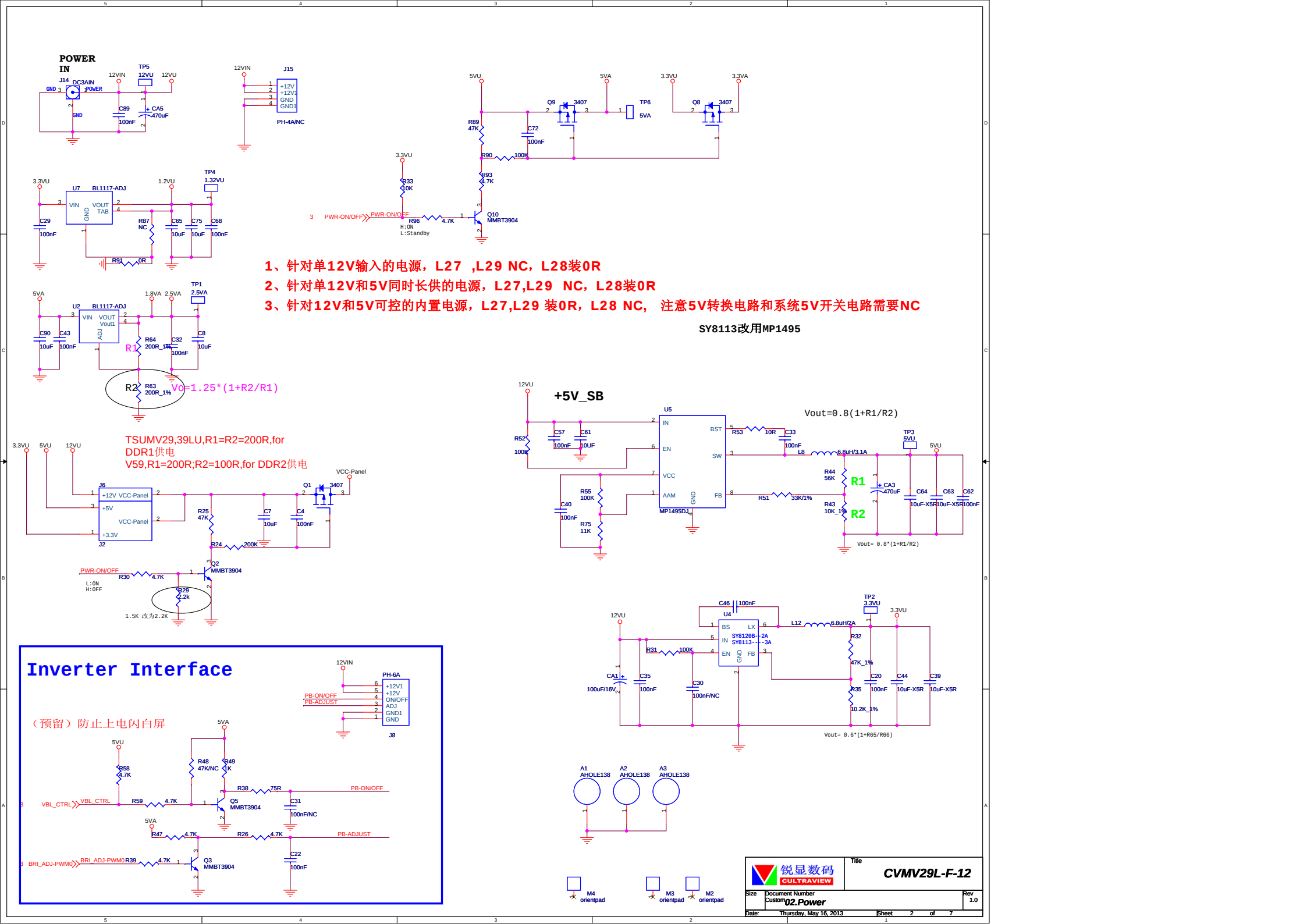
POWER IN
J14 DC3AIN
TP5 12VU
12VIN
12VU
C89 100nF
CA5 470uF
J15
PH-4A/NC
5VU
5VA
3.3VU
3.3VA
Q9 3407
Q8 3407
TP6 5VA
R89 47K
C72 100nF
R90 100K
R93 4.7K
R33 10K
PWR-ON/OFF
R96 4.7K
H:ON
L:Standby
Q10 MMBT3904
U7 BL1117-ADJ
VIN
VOUT
TAB
GND
TP4 1.32VU
1.2VU
C29 100nF
R87 NC
C65 10uF
C75 10uF
C68 100nF
R91 0R
U2 BL1117-ADJ
Vout1
ADJ
1.8VA
2.5VA
TP1 2.5VA
C90 10uF
C43 100nF
R64 200R_1%
C32 100nF
C8 10uF
R1
R2
R63 200R_1%
Vo=1.25*(1+R2/R1)
1、针对单12V输入的电源，L27 ,L29 NC，L28装0R
2、针对单12V和5V同时长供的电源，L27,L29 NC，L28装0R
3、针对12V和5V可控的内置电源，L27,L29 装0R，L28 NC， 注意5V转换电路和系统5V开关电路需要NC
SY8113改用MP1495
TSUMV29,39LU,R1=R2=200R,for DDR1供电
V59,R1=200R;R2=100R,for DDR2供电
J6
+12V VCC-Panel
+5V
VCC-Panel
+3.3V
J2
VCC-Panel
Q1 3407
R25 47K
C7 10uF
C4 100nF
R24 200K
Q2 MMBT3904
PWR-ON/OFF
R30 4.7K
L:ON
H:OFF
R29 2.2k
1.5K 改为2.2K
+5V_SB
U5
MP1495DJ
IN
EN
VCC
AAM
BST
SW
FB
GND
R52 100K
C57 100nF
C61 10UF
R55 100K
C40 100nF
R75 11K
R53 10R
C33 100nF
L8 6.8uH/3.1A
R44 56K
R43 10K_1%
R51 33K/1%
CA3 470uF
C64 10uF-X5R
C63 10uF-X5R
C62 100nF
TP3 5VU
Vout=0.8(1+R1/R2)
Vout= 0.8*(1+R1/R2)
U4
SY8120B--2A
SY8113---3A
BS
LX
IN
EN
GND
FB
C46 100nF
L12 6.8uH/2A
TP2 3.3VU
R31 100K
CA1 100uF/16V
C35 100nF
C30 100nF/NC
R32 47K_1%
R35 10.2K_1%
C20 100nF
C44 10uF-X5R
C39 10uF-X5R
Vout= 0.6*(1+R65/R66)
A1 AHOLE138
A2 AHOLE138
A3 AHOLE138
M4 orientpad
M3 orientpad
M2 orientpad
Inverter Interface
（预留）防止上电闪白屏
PH-6A
+12V1
+12V
ON/OFF
ADJ
GND1
GND
PB-ON/OFF
PB-ADJUST
J8
R58 4.7K
R48 47K/NC
R49 1K
R38 75R
VBL_CTRL
R59 4.7K
Q5 MMBT3904
C31 100nF/NC
R47 4.7K
R26 4.7K
BRI_ADJ-PWM0
R39 4.7K
Q3 MMBT3904
C22 100nF
锐显数码
CULTRAVIEW
Title
CVMV29L-F-12
Size
Document Number
Custom
02.Power
Rev
1.0
Date: Thursday, May 16, 2013
Sheet 2 of 7

MAIN IC Chip

RESET

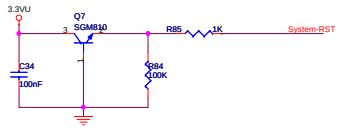

晶振负载电容确定

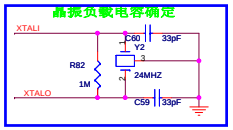

FLASH

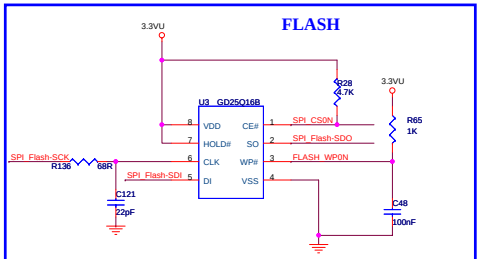

主IC选用TSUMV39LU时，具有MM功能，默认使1MByte的Flash，如果有需要，可以使用2MByte;
如果不使用MM功能，则Flash默认为512K。
主IC选用TSUMV29LU时，不具有MM功能，默认使用512KByte。

DEBUG PORT

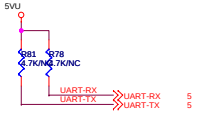

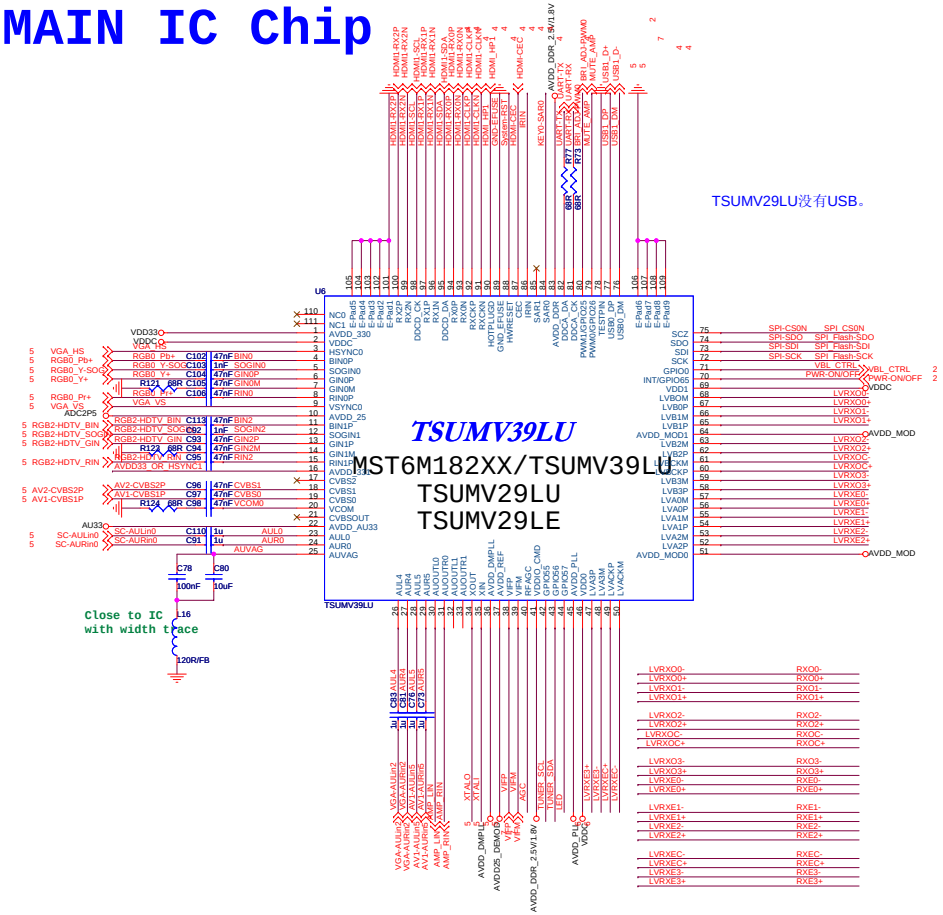

IC Power

Close to IC

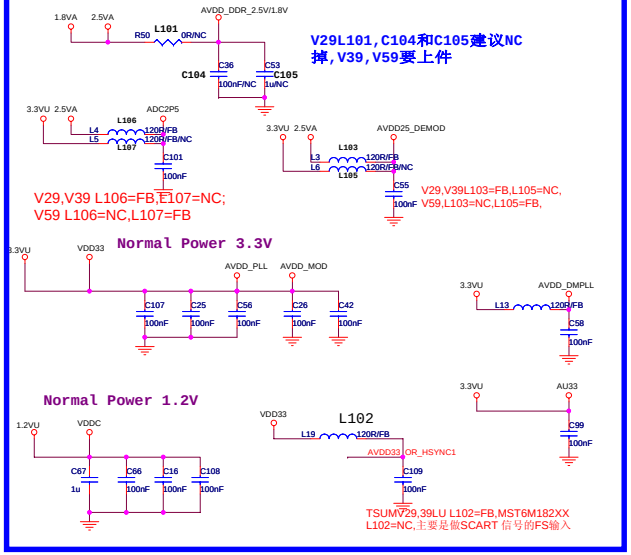

CHIP_CONFIG

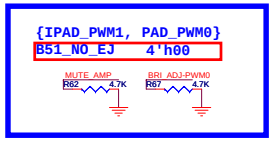

LED IR KEYBOARD

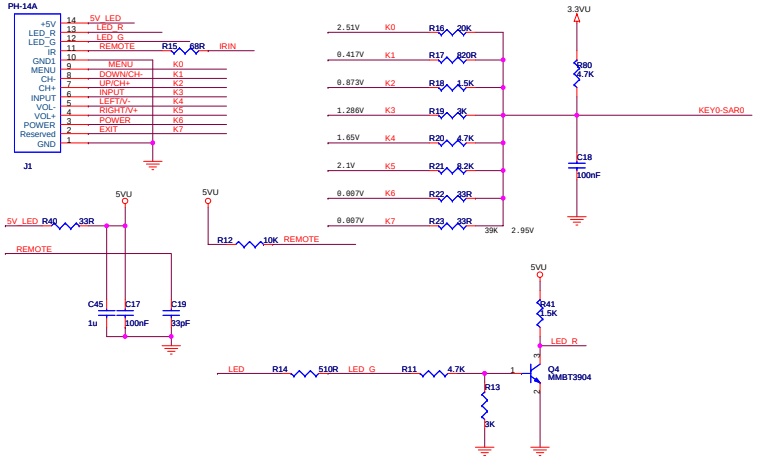

Tuner Connector

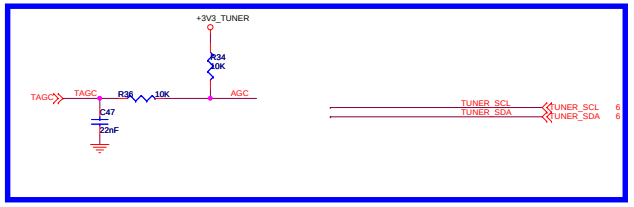

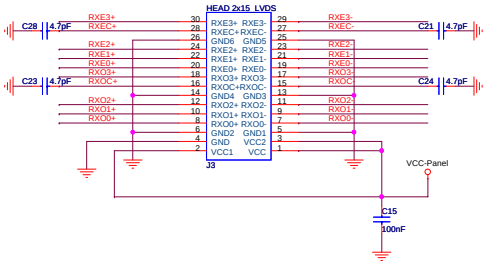

锐显数码 CULTRAVIEW	Title	CVMV29L-F-12	
Size	Document Number Custom	03.TSUMV39LU	Rev 1.0
Date: Wednesday, April 24, 2013	Sheet 3 of 7		

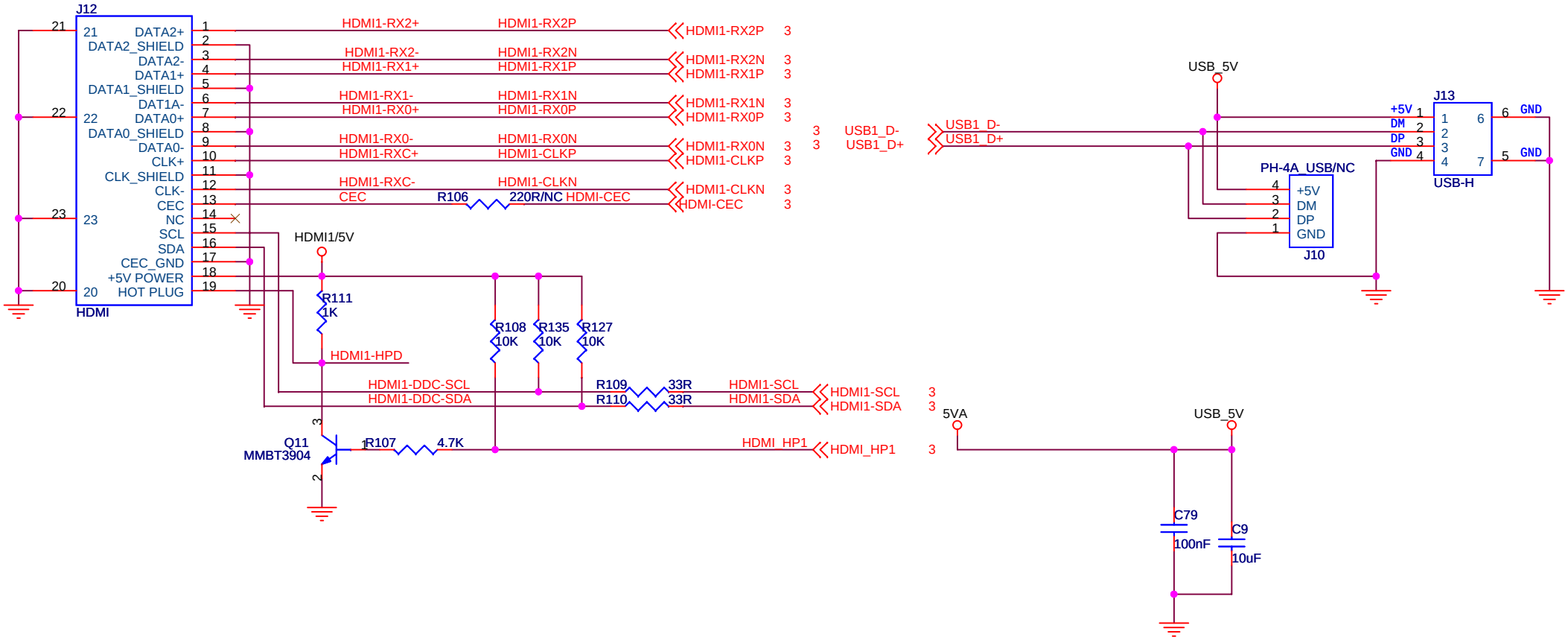

锐显数码 CULTRAVIEW	Title	CVMV29L-F-12
Size	Document Number Custom	04.HDMI&USB
		Rev 1.0
Date:	Wednesday, April 24, 2013	Sheet 4 of 7

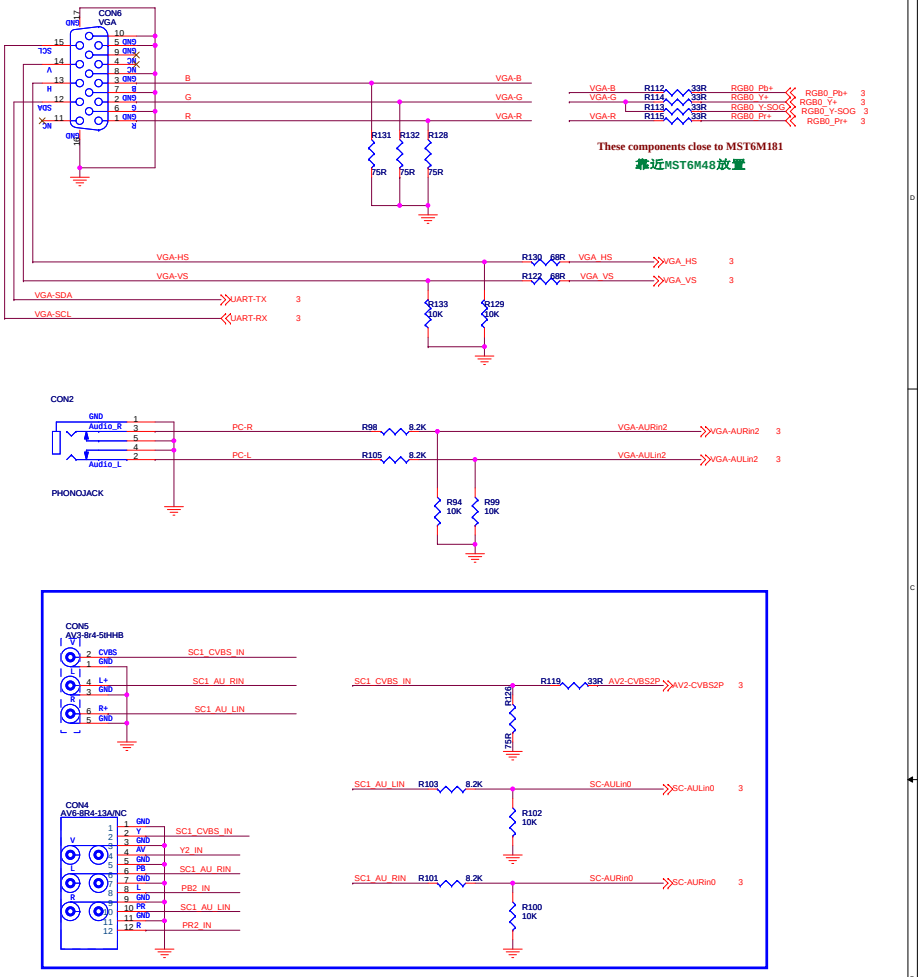

锐显数码 CULTRAVIEW

Title: CVMV29L-F-12

Size | Document Number: 05.VGA&YPbPr&AV | Rev 1.0

Date: Wednesday, April 24, 2013 | Sheet 5 of 7

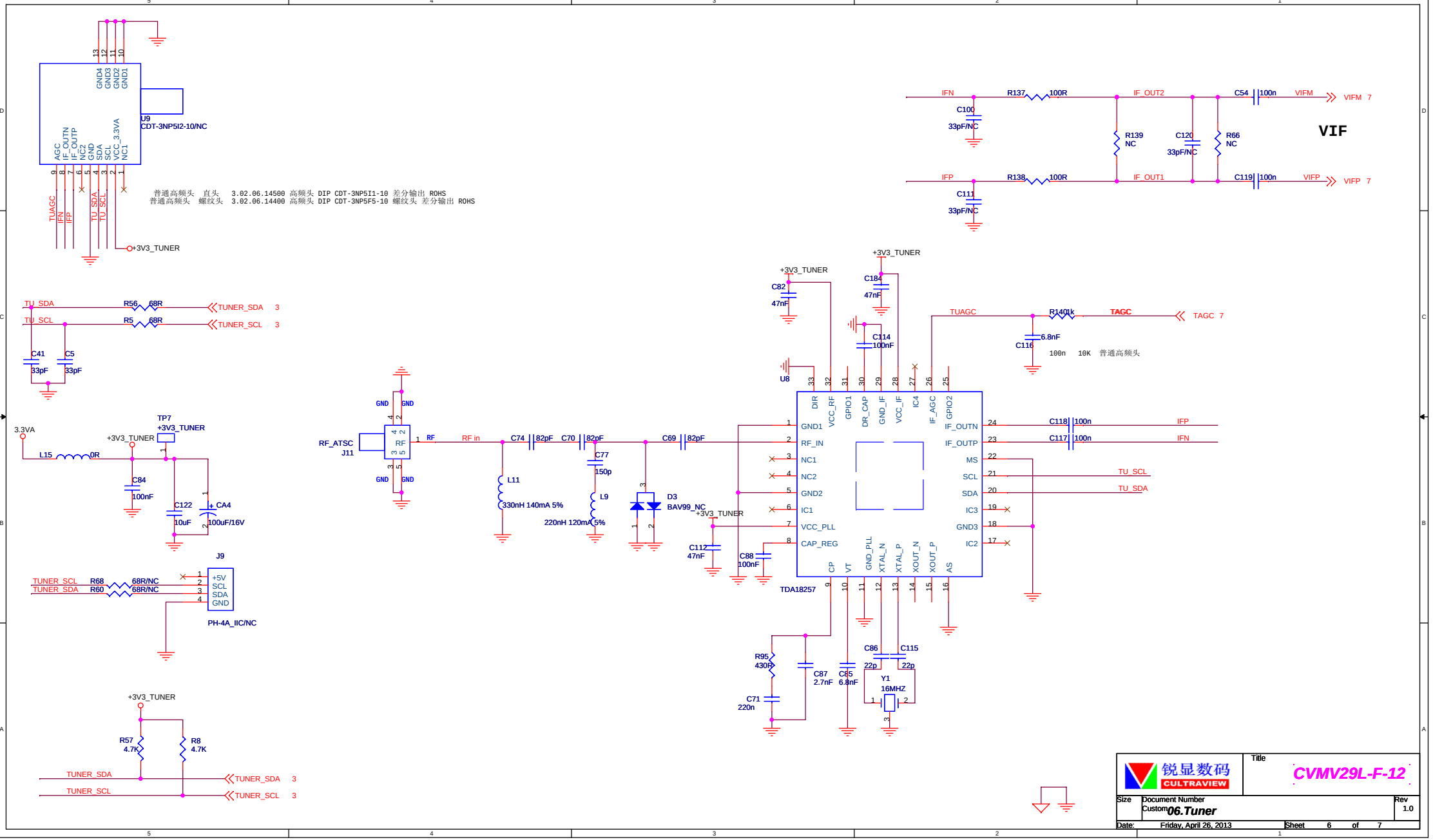
U9
CDT-3NP5I2-10/NC
普通高频头 直头 3.02.06.14500 高频头 DIP CDT-3NP5I1-10 差分输出 ROHS
普通高频头 螺纹头 3.02.06.14400 高频头 DIP CDT-3NP5F5-10 螺纹头 差分输出 ROHS
+3V3_TUNER
VIF
IFN
IFP
IF_OUT2
IF_OUT1
VIFM
VIFP
TAGC
TU_SDA
TU_SCL
TUAGC
TUNER_SDA
TUNER_SCL
RF_ATSC
J11
RF in
TP7
J9
PH-4A_IIC/NC
U8
TDA18257
D3
BAV99_NC
Y1
16MHZ
CULTRAVIEW
Title
CVMV29L-F-12
Size
Custom
Document Number
06.Tuner
Rev
1.0
Date:
Friday, April 26, 2013
Sheet 6 of 7

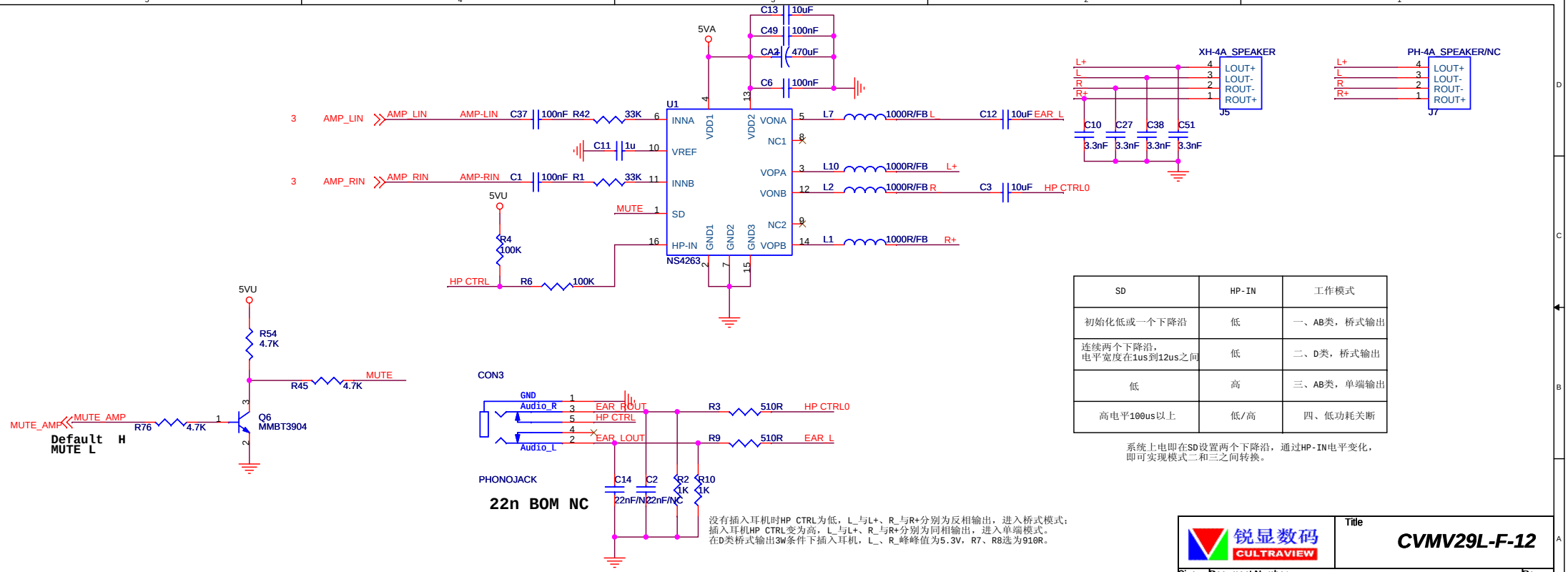

SD	HP-IN	工作模式
初始化低或一个下降沿	低	一、AB类，桥式输出
连续两个下降沿，电平宽度在1us到12us之间	低	二、D类，桥式输出
低	高	三、AB类，单端输出
高电平100us以上	低/高	四、低功耗关断

系统上电即在SD设置两个下降沿，通过HP-IN电平变化，即可实现模式二和三之间转换。

没有插入耳机时HP CTRL为低，L_与L+、R_与R+分别为反相输出，进入桥式模式；
插入耳机HP CTRL变为高，L_与L+、R_与R+分别为同相输出，进入单端模式。
在D类桥式输出3W条件下插入耳机，L_、R_峰峰值为5.3V，R7、R8选为910R。

锐显数码 CULTRAVIEW

Title: CVMV29L-F-12

Size: Custom | Document Number: 07.AMP | Rev: 1.0

Date: Wednesday, April 24, 2013 | Sheet 7 of 7

CV29L-F-12
Common problems solution

—System Chart
—Power Units Problem Solving
—Display Units Problem Solving
—Audio Units Problem Solving
—Functional Units Problem Solving

CV29L-F-10 System Block

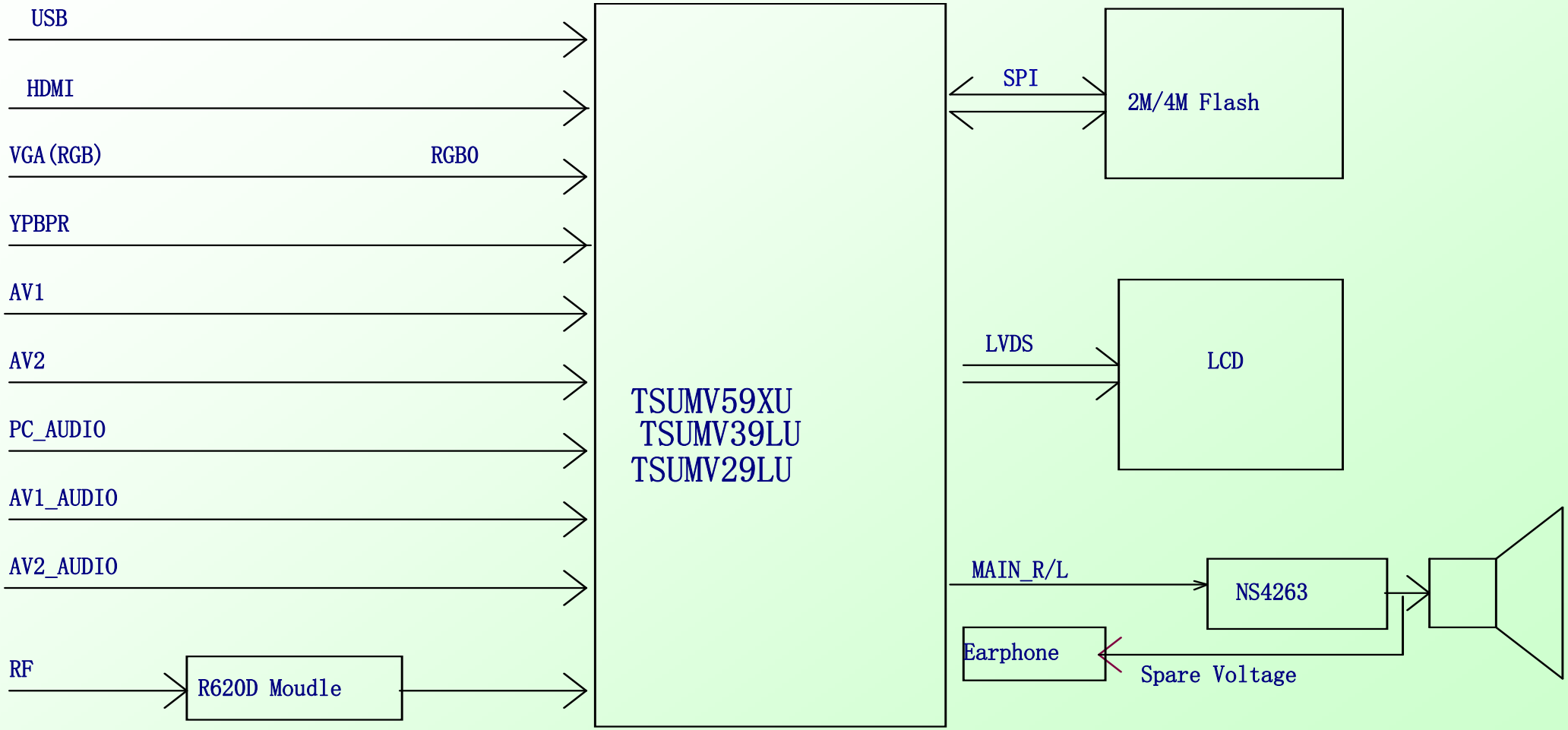

Figure.1 Power Units Problem Solving

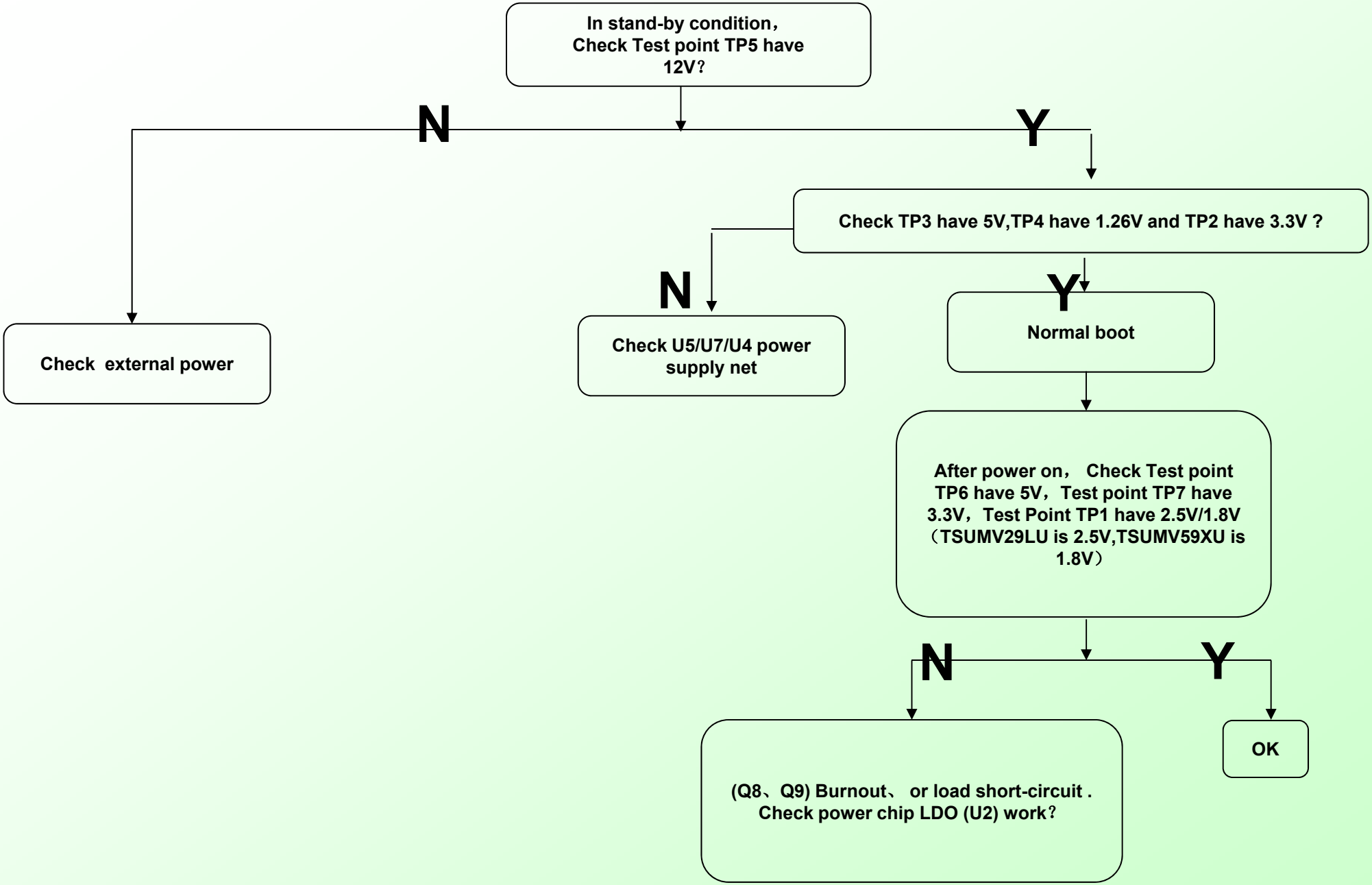

Figure.2 Display Unit (black screen)

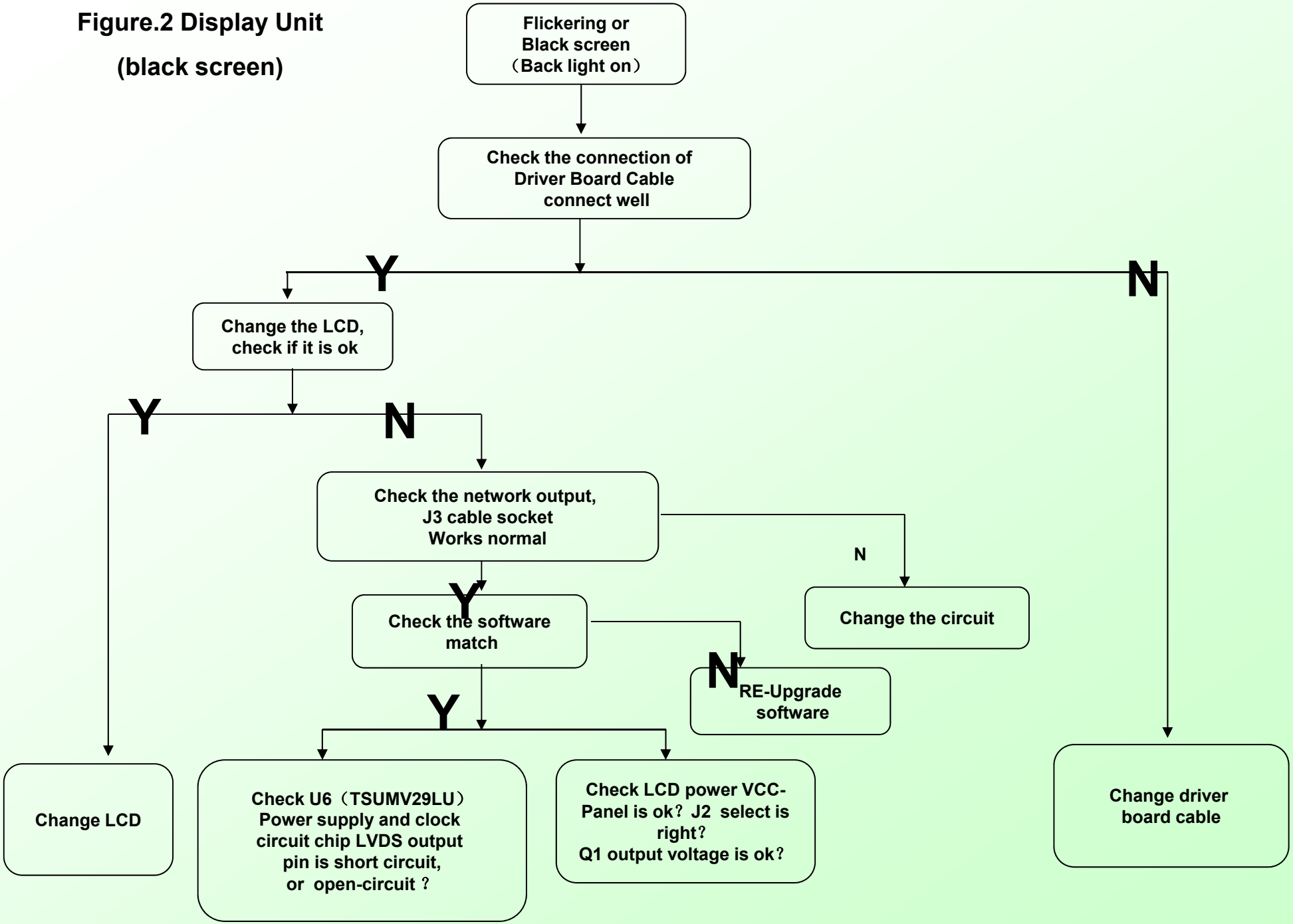

Figure.3 Display Unit (black screen)

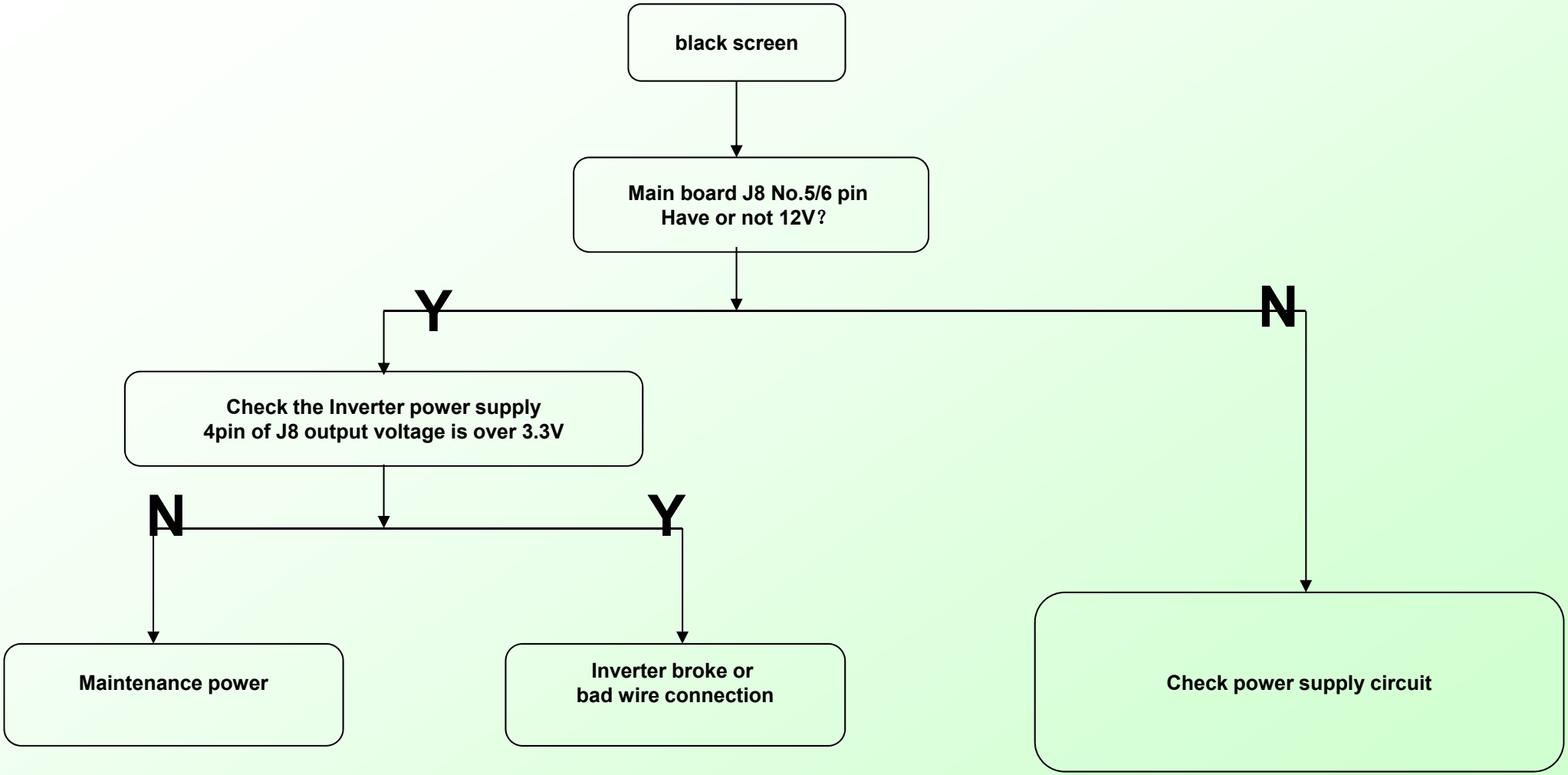

Figure.4 Audio Unit (no sound)

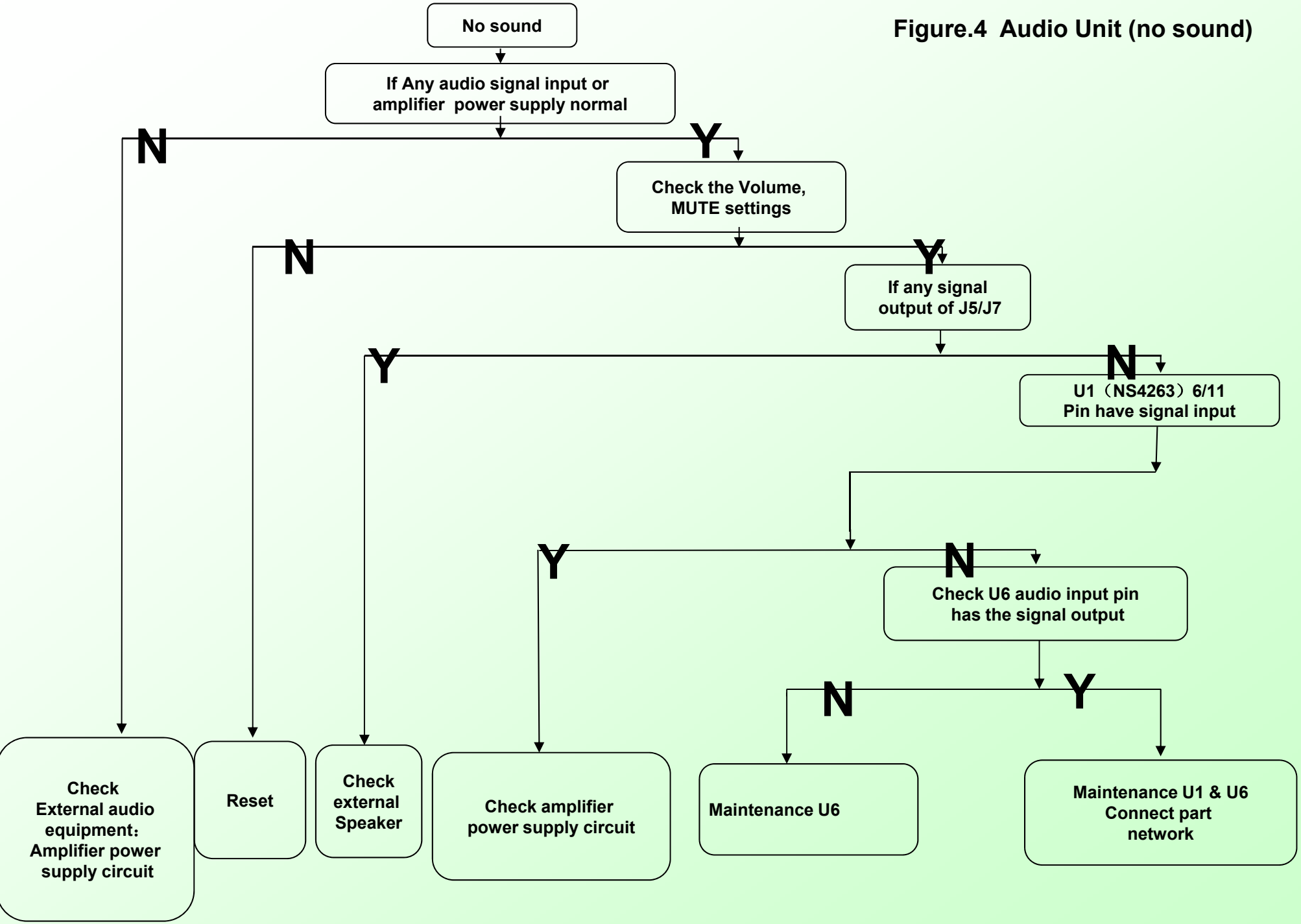

Figure.5 Function Unit (ATV broke down)

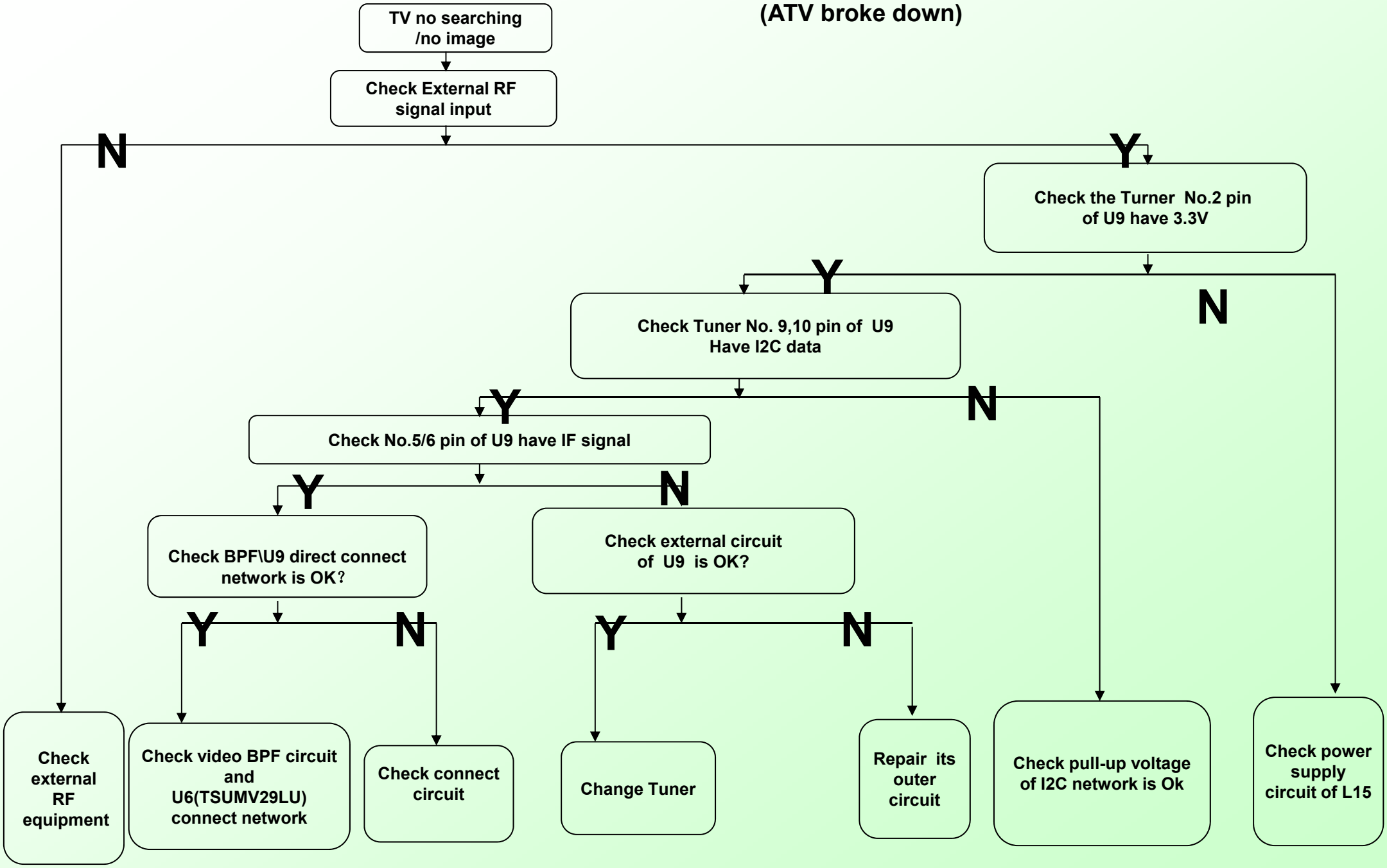

Figure.6 Function Unit（ATV with the image but no sound)

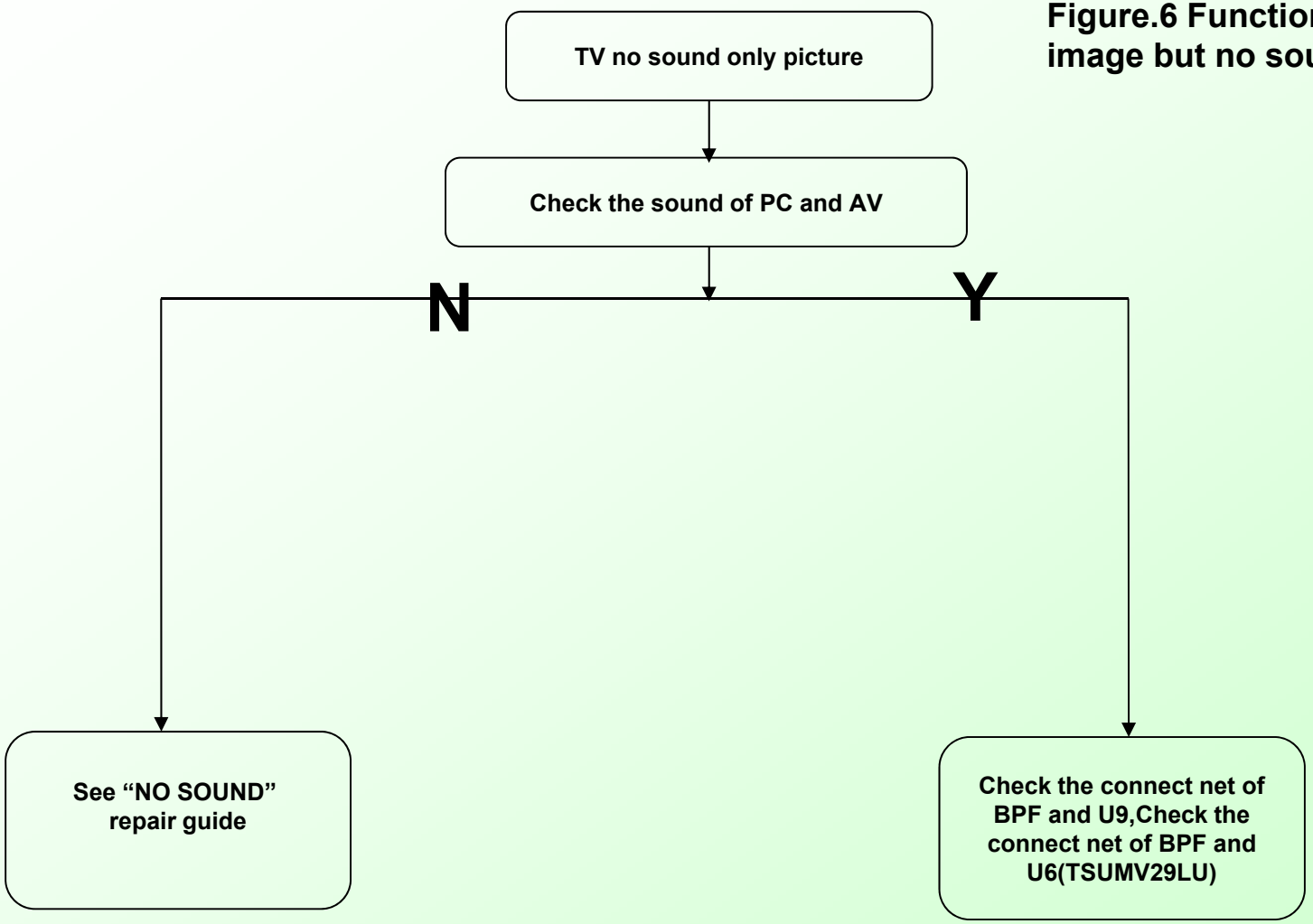

Figure.7 Function Unit (PC)

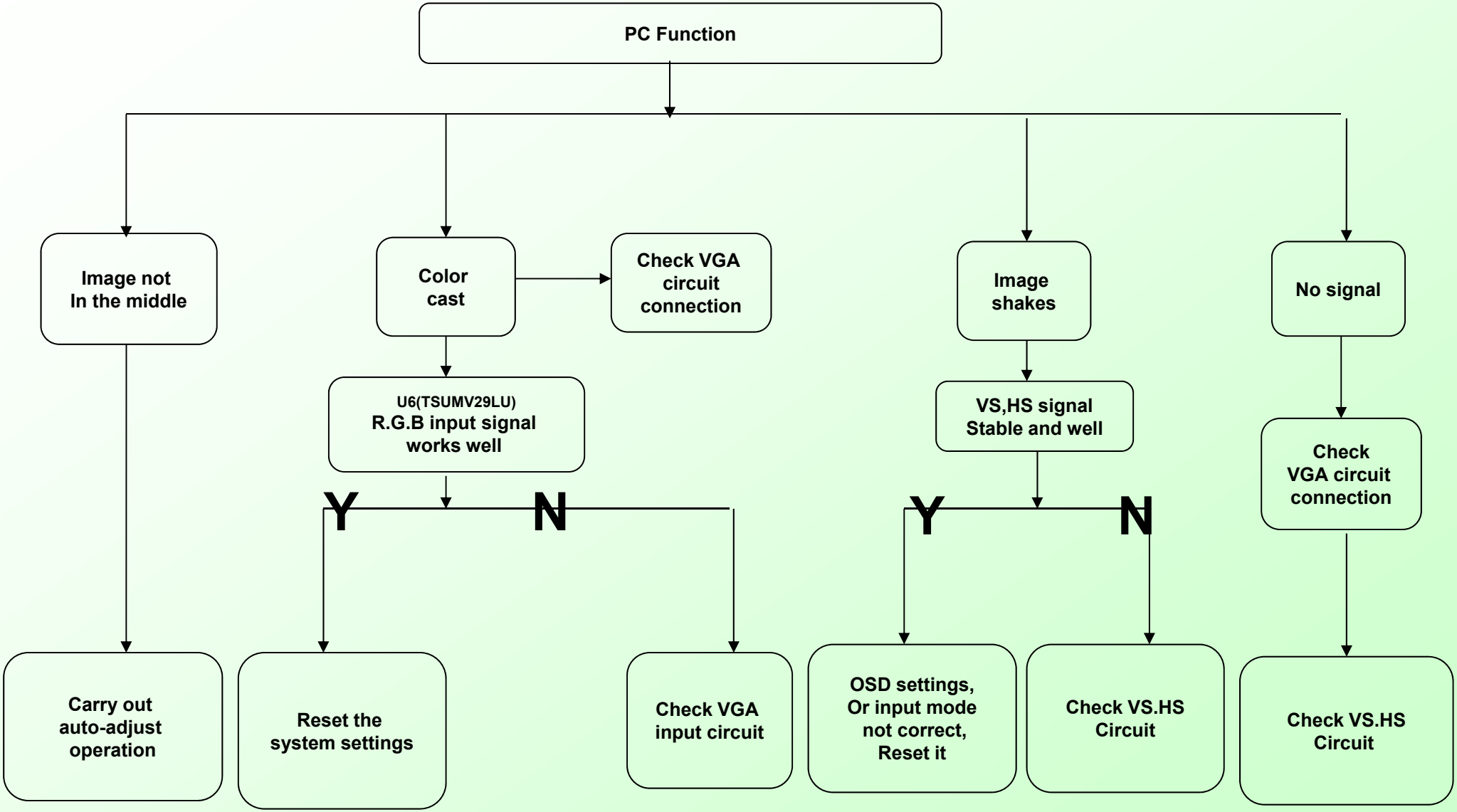

Figure.8 Function Unit

（VGA）

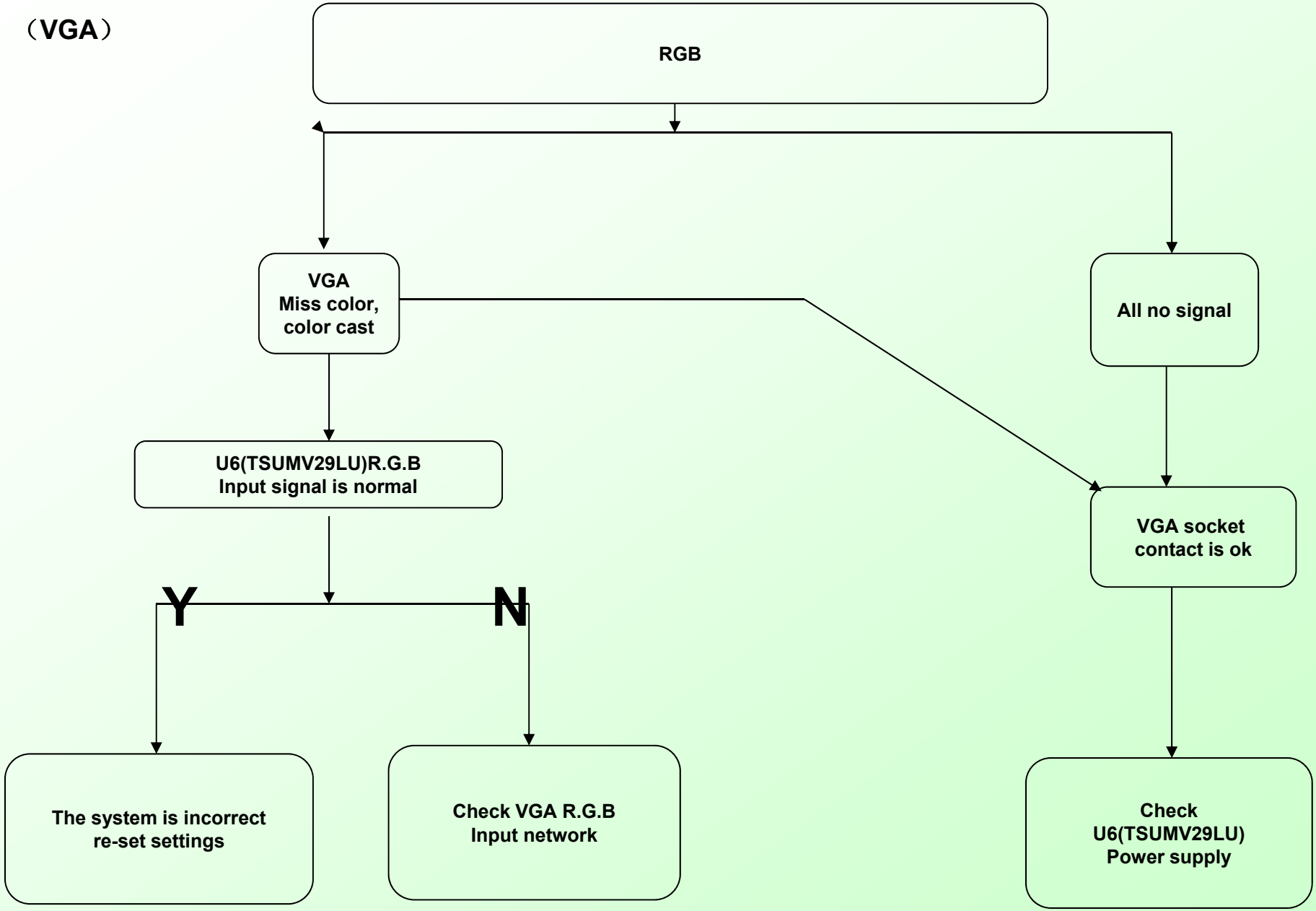

Figure.9 Function Unit （HDMI）

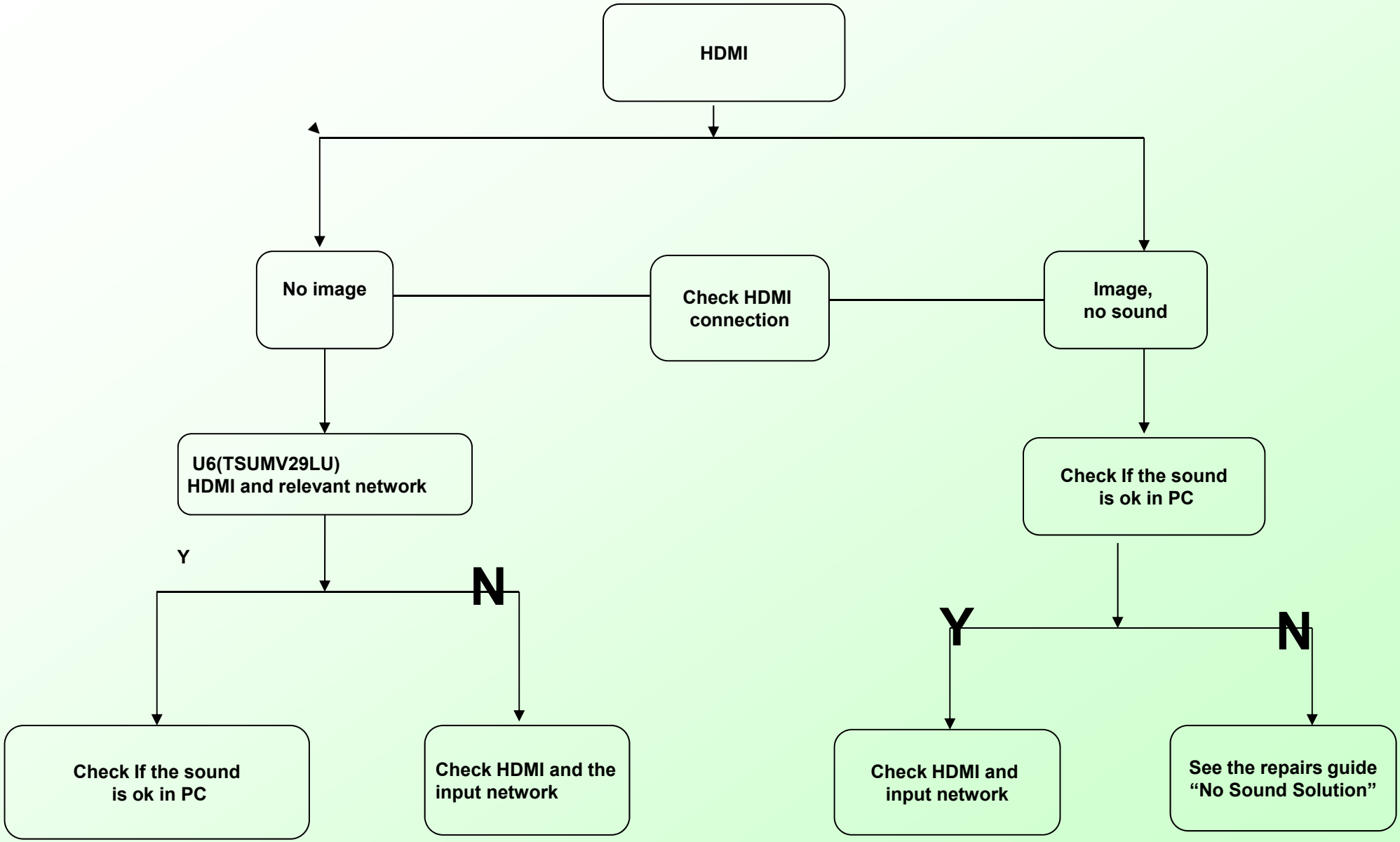

Figure.10 Function Unit （YPBPR）