TELEFUNKEN

LED COLOR TV

Service Manual

FOR MODEL NO:

TF-LED19S2

TF-LED22S2

TF-LED24S2

Exploded view and mechanical parts list

FOR:TF-LED19S2/TF-LED22S2/TF-LED24S2

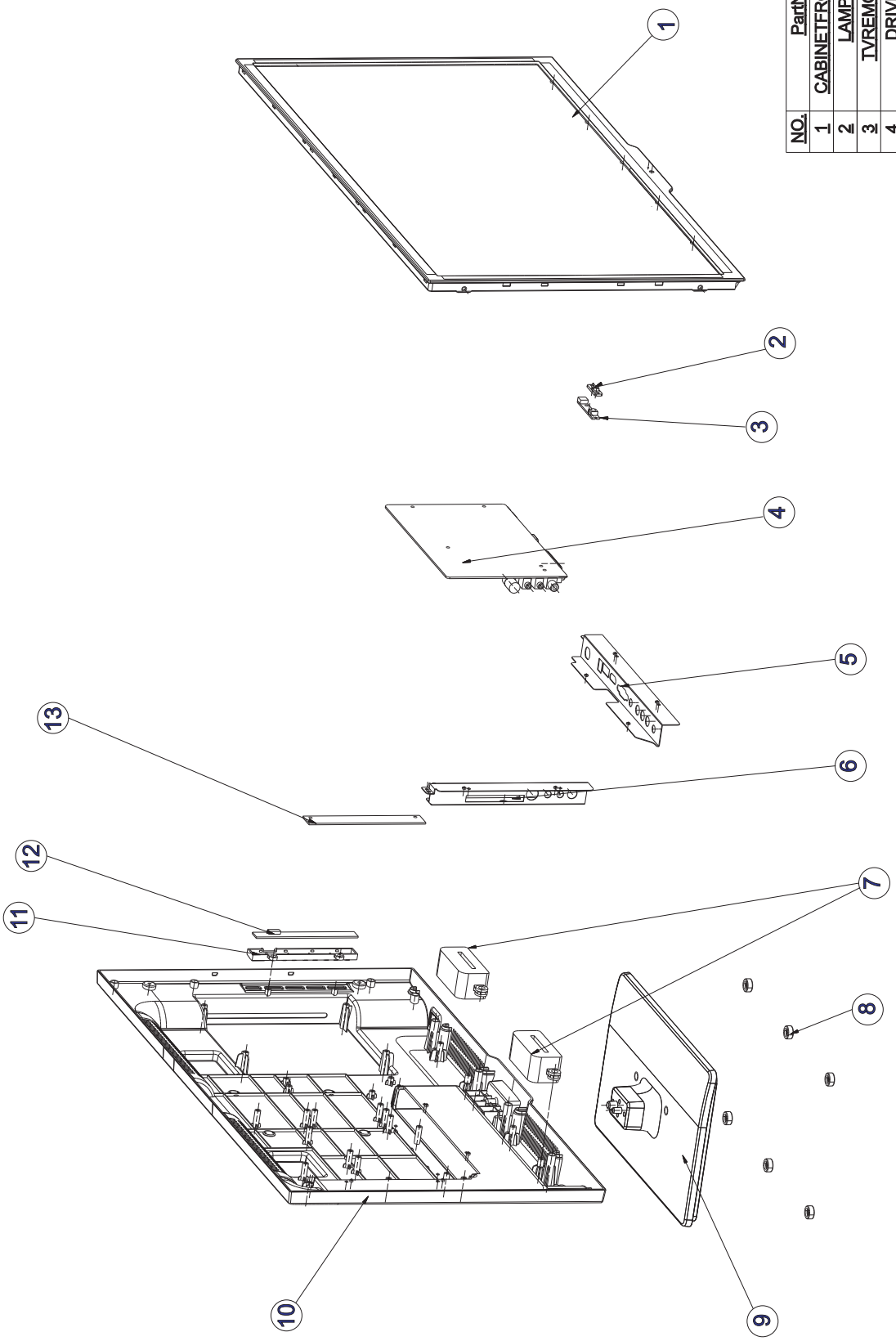

NO.	PartName	QTY
1	CABINETFRONT&PANEL	1
2	LAMPLENS	1
3	TVREMOTEPCB	1
4	DRIVEPCB	1
5	TERMINALBASE	1
6	TERMINALBASE	1
7	SPEAKER	2
8	RUBBER	6
9	STANDBRACKET	1
10	TVCABBACK	1
11	FUNCTIONKEY	1
12	KEYPCB	1
13	INVERTER	1

Photo For Driver PCB

FOR:TF-LED19S2/TF-LED22S2/TF-LED24S2

PCB Name : Driver PCB
Driver PCB Model No.: CV59L-C-11

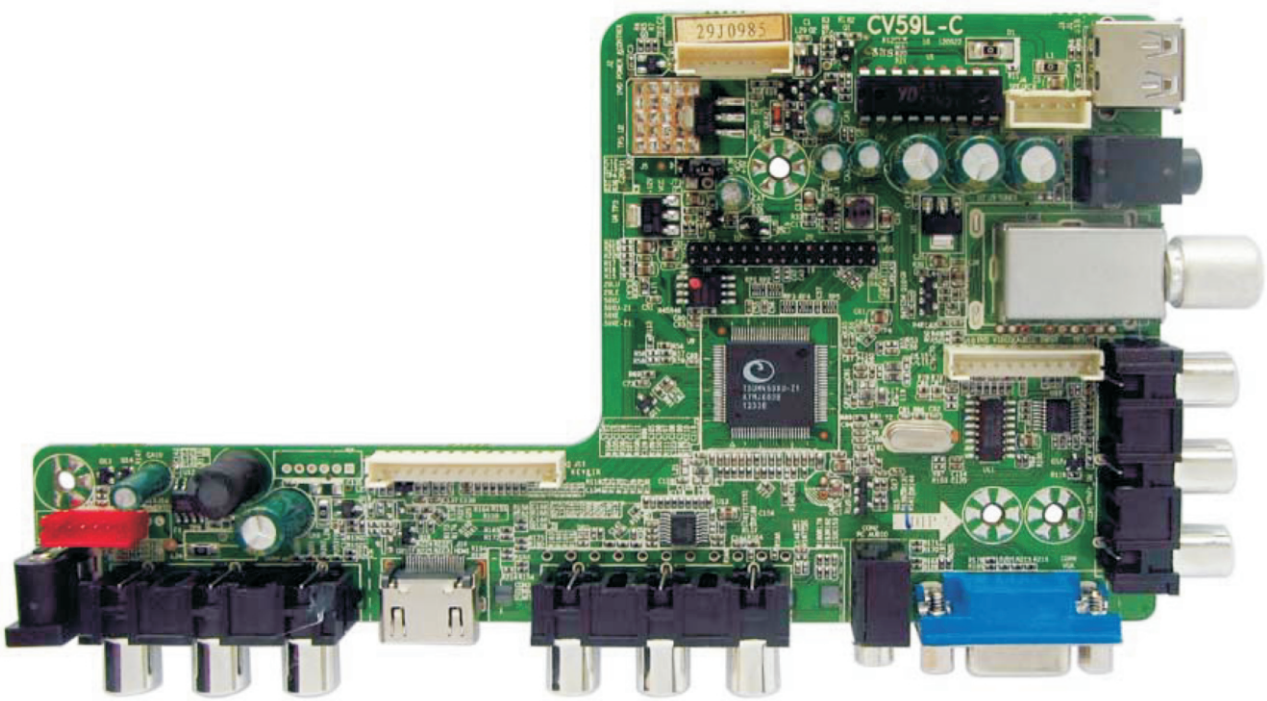

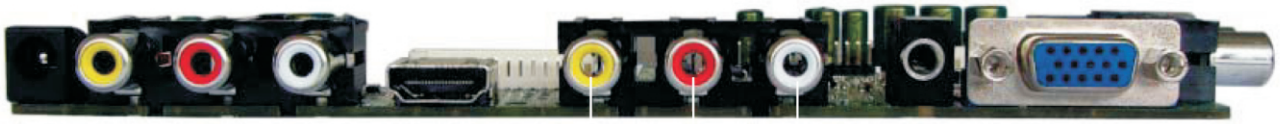

Photo For Inverter PCB

FOR: TF-LED19S2/TF-LED22S2/TF-LED24S2

PCB Name: Inverter PCB
Inverter PCB Model No. : HQ-LED58-1C5T/HQ-LED58-100/HQ-LED58-130

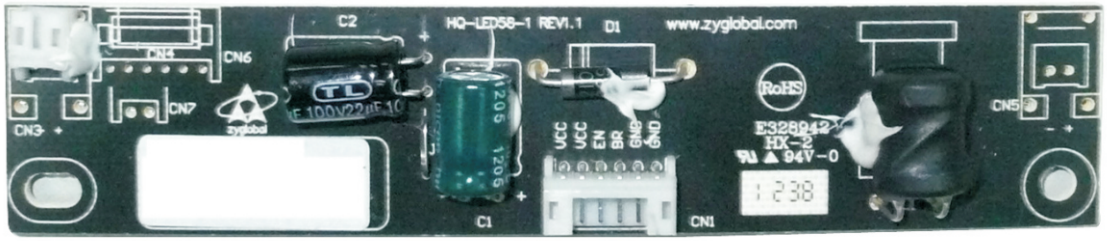

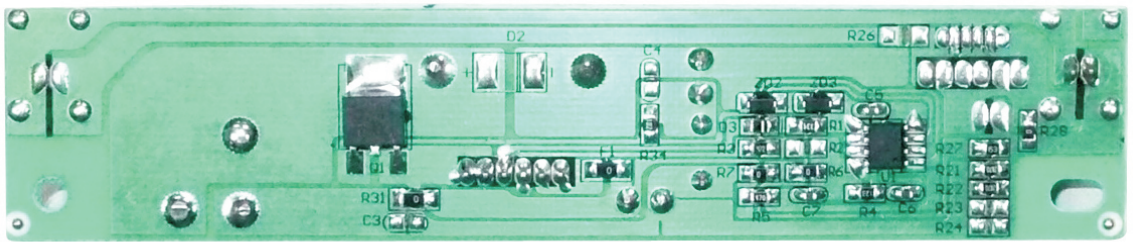

Driver PCB Principle Diagram

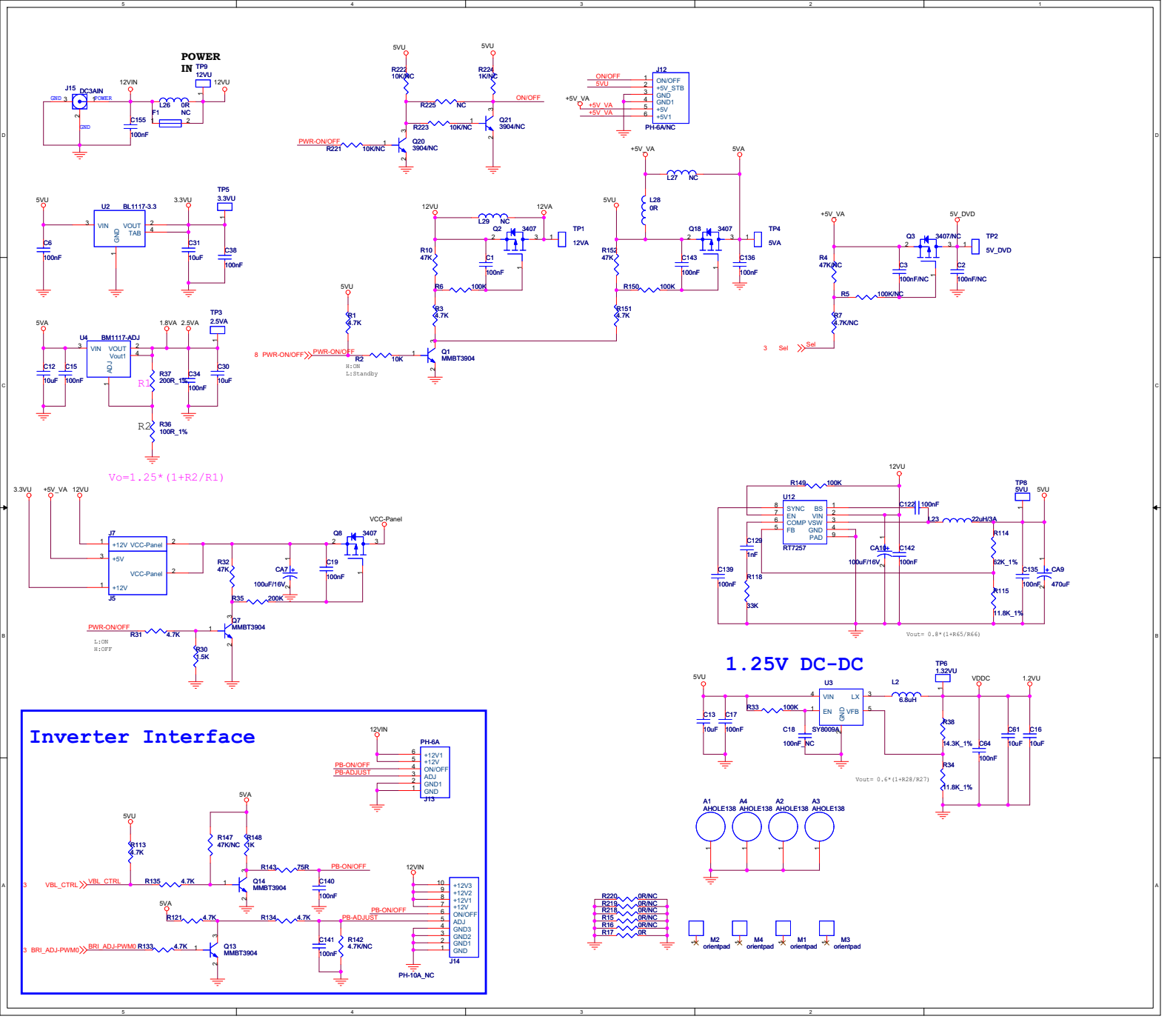
POWER IN
J15 DC3AIN
TP9 12VU
12VIN
L26 0R NC
F1
C155 100nF
5VU
R222 10K/NC
R224 1K/NC
R225 NC
R223 10K/NC
Q21 3904/NC
Q20 3904/NC
R221 10K/NC
ON/OFF
PWR-ON/OFF
J12 PH-6A/NC
+5V_VA
U2 BL1117-3.3
TP5 3.3VU
C6 100nF
C31 10uF
C38 100nF
U4 BM1117-ADJ
TP3 2.5VA
C12 10uF
C15 100nF
R37 200R_1%
C34 100nF
C30 10uF
R36 100R_1%
Vo=1.25*(1+R2/R1)
L29 NC
Q2 3407
TP1 12VA
R10 47K
C1 100nF
R6 100K
R3 4.7K
R1 4.7K
R2 10K
Q1 MMBT3904
H:ON
L:Standby
L27 NC
L28 0R
Q18 3407
TP4 5VA
R152 47K
C143 100nF
C136 100nF
R150 100K
R151 4.7K
5VA
R4 47K/NC
Q3 3407/NC
TP2 5V_DVD
C3 100nF/NC
C2 100nF/NC
R5 100K/NC
R7 4.7K/NC
Sel
3.3VU
J7
+12V VCC-Panel
+5V
VCC-Panel
+12V
J5
R32 47K
CA7 100uF/16V
C19 100nF
Q8 3407
VCC-Panel
R35 200K
Q7 MMBT3904
PWR-ON/OFF
R31 4.7K
R30 1.5K
L:ON
H:OFF
R149 100K
U12 RT7257
SYNC BS
EN VIN
COMP VSW
FB GND
PAD
C122 100nF
L23 22uH/3A
TP8 5VU
C129 1nF
C139 100nF
R118 33K
CA10 100uF/16V
C142 100nF
R114 62K_1%
C135 100nF
CA9 470uF
R115 11.8K_1%
Vout= 0.8*(1+R65/R66)
1.25V DC-DC
U3 SY8009A
VIN LX
EN VFB
GND
L2 6.8uH
TP6 1.32VU
VDDC
1.2VU
C13 10uF
C17 100nF
R33 100K
C18 100nF_NC
R38 14.3K_1%
C64 100nF
C61 10uF
C16 10uF
R34 11.8K_1%
Vout= 0.6*(1+R28/R27)
A1 AHOLE138
A4 AHOLE138
A2 AHOLE138
A3 AHOLE138
R220 0R/NC
R219 0R/NC
R218 0R/NC
R15 0R/NC
R16 0R/NC
R17 0R
M2 orientpad
M4 orientpad
M1 orientpad
M3 orientpad
Inverter Interface
12VIN
PH-6A
PB-ON/OFF
PB-ADJUST
J13
5VA
R113 4.7K
R147 47K/NC
R148 1K
R143 75R
C140 100nF
VBL_CTRL
R135 4.7K
Q14 MMBT3904
R121 4.7K
R134 4.7K
C141 100nF
R142 4.7K/NC
BRI_ADJ-PWM0
R133 4.7K
Q13 MMBT3904
+12V3
+12V2
+12V1
+12V
ON/OFF
ADJ
GND3
GND2
GND1
GND
J14
PH-10A_NC

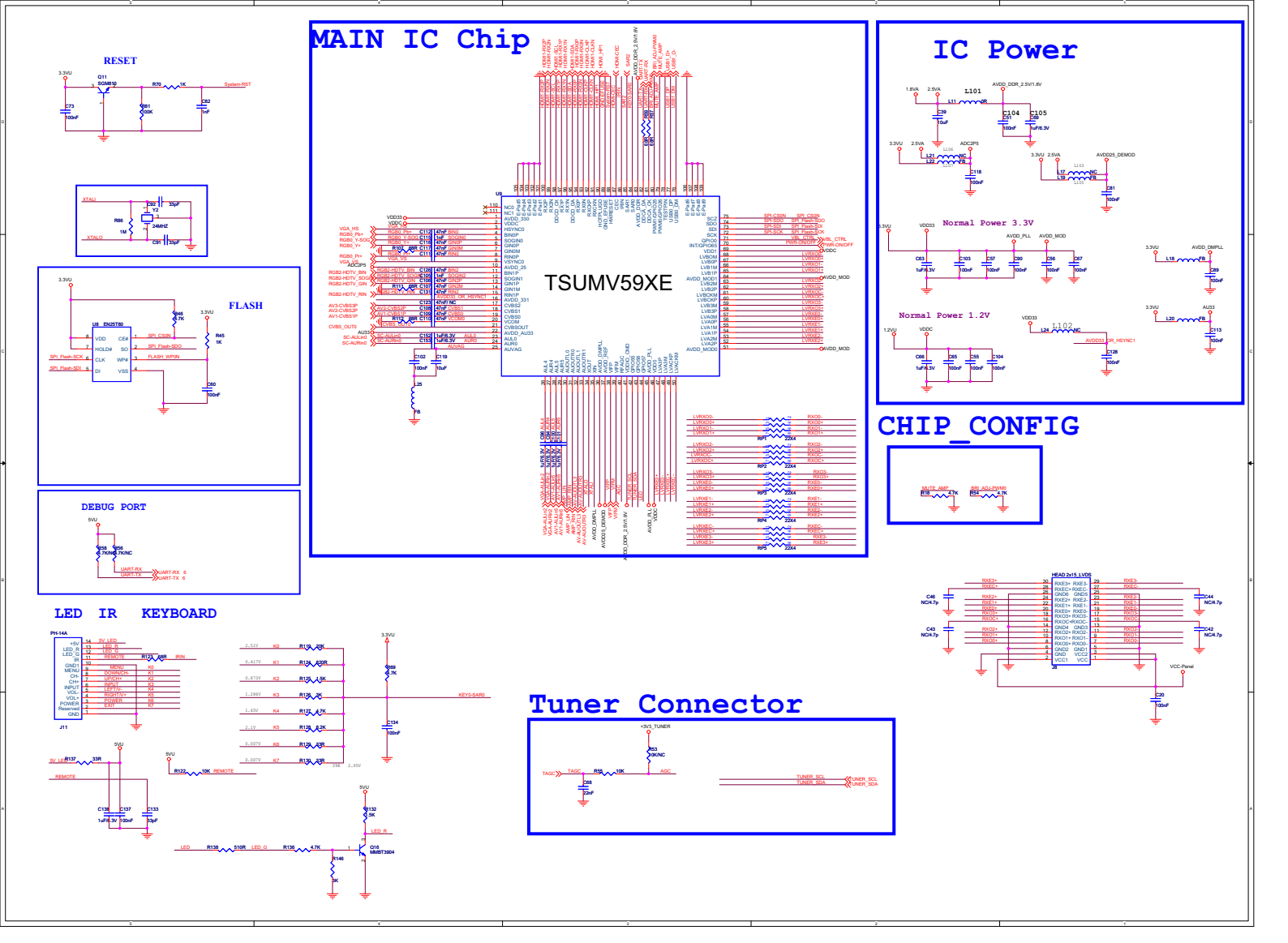
RESET
FLASH
DEBUG PORT
MAIN IC Chip
TSUMV59XE
IC Power
Normal Power 3.3V
Normal Power 1.2V
CHIP_CONFIG
LED IR KEYBOARD
Tuner Connector

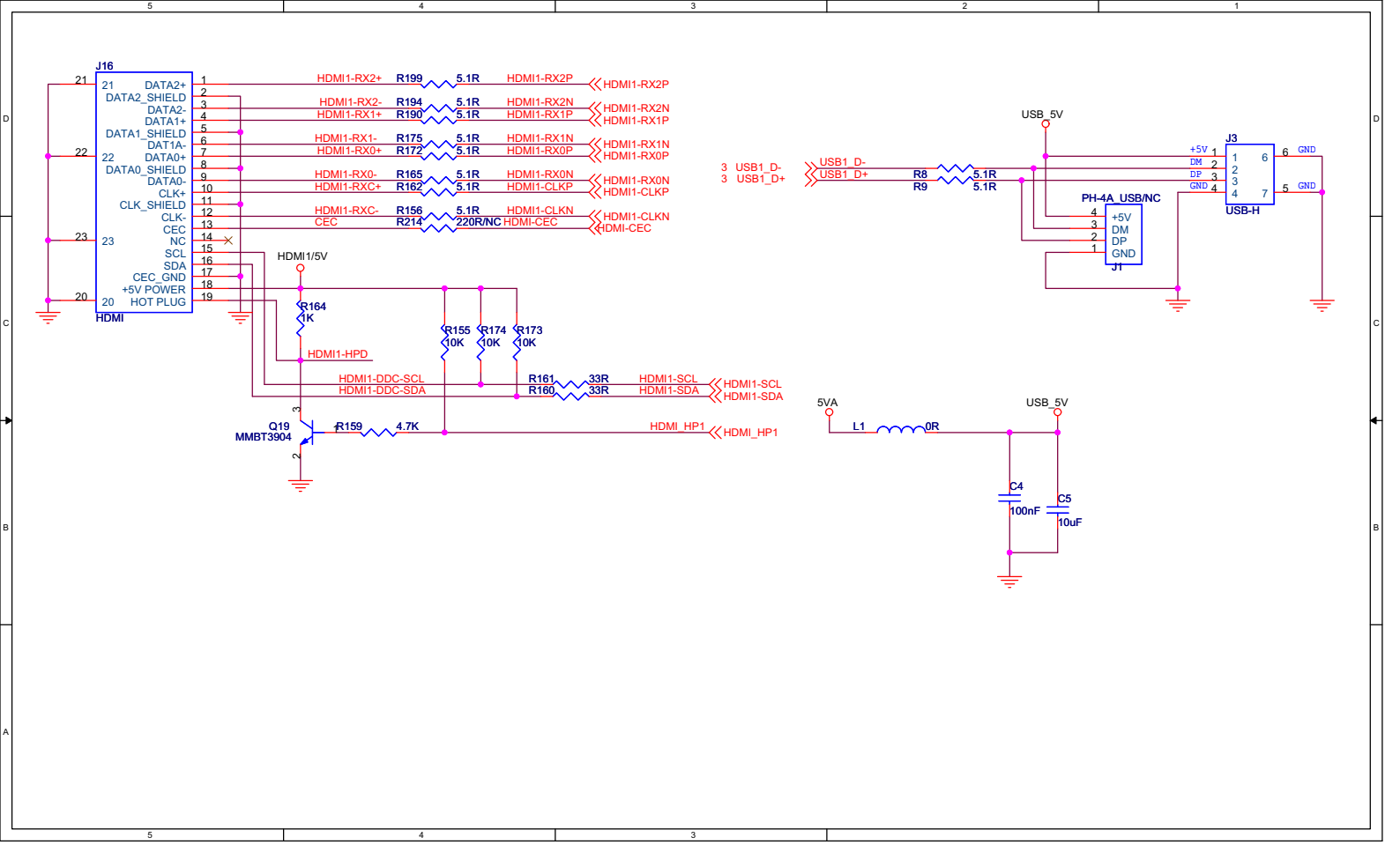
J16
HDMI
DATA2+
DATA2_SHIELD
DATA2-
DATA1+
DATA1_SHIELD
DATA1A-
DATA0+
DATA0_SHIELD
DATA0-
CLK+
CLK_SHIELD
CLK-
CEC
NC
SCL
SDA
CEC_GND
+5V POWER
HOT PLUG
HDMI1-RX2+ R199 5.1R HDMI1-RX2P
HDMI1-RX2-
HDMI1-RX1+ R190 5.1R HDMI1-RX1P
HDMI1-RX1- R175 5.1R HDMI1-RX1N
HDMI1-RX0+ R172 5.1R HDMI1-RX0P
HDMI1-RX0- R165 5.1R HDMI1-RX0N
HDMI1-RXC+ R162 5.1R HDMI1-CLKP
HDMI1-RXC- R156 5.1R HDMI1-CLKN
CEC R214 220R/NC HDMI-CEC
HDMI1/5V
R164 1K
HDMI1-HPD
R155 10K
R174 10K
R173 10K
HDMI1-DDC-SCL
HDMI1-DDC-SDA
R161 33R
R160 33R
HDMI1-SCL
HDMI1-SDA
Q19 MMBT3904
R159 4.7K
HDMI_HP1
USB_5V
3 USB1_D-
3 USB1_D+
R8 5.1R
R9 5.1R
J3
USB-H
+5V
DM
DP
GND
PH-4A_USB/NC
J1
5VA
L1 0R
C4 100nF
C5 10uF

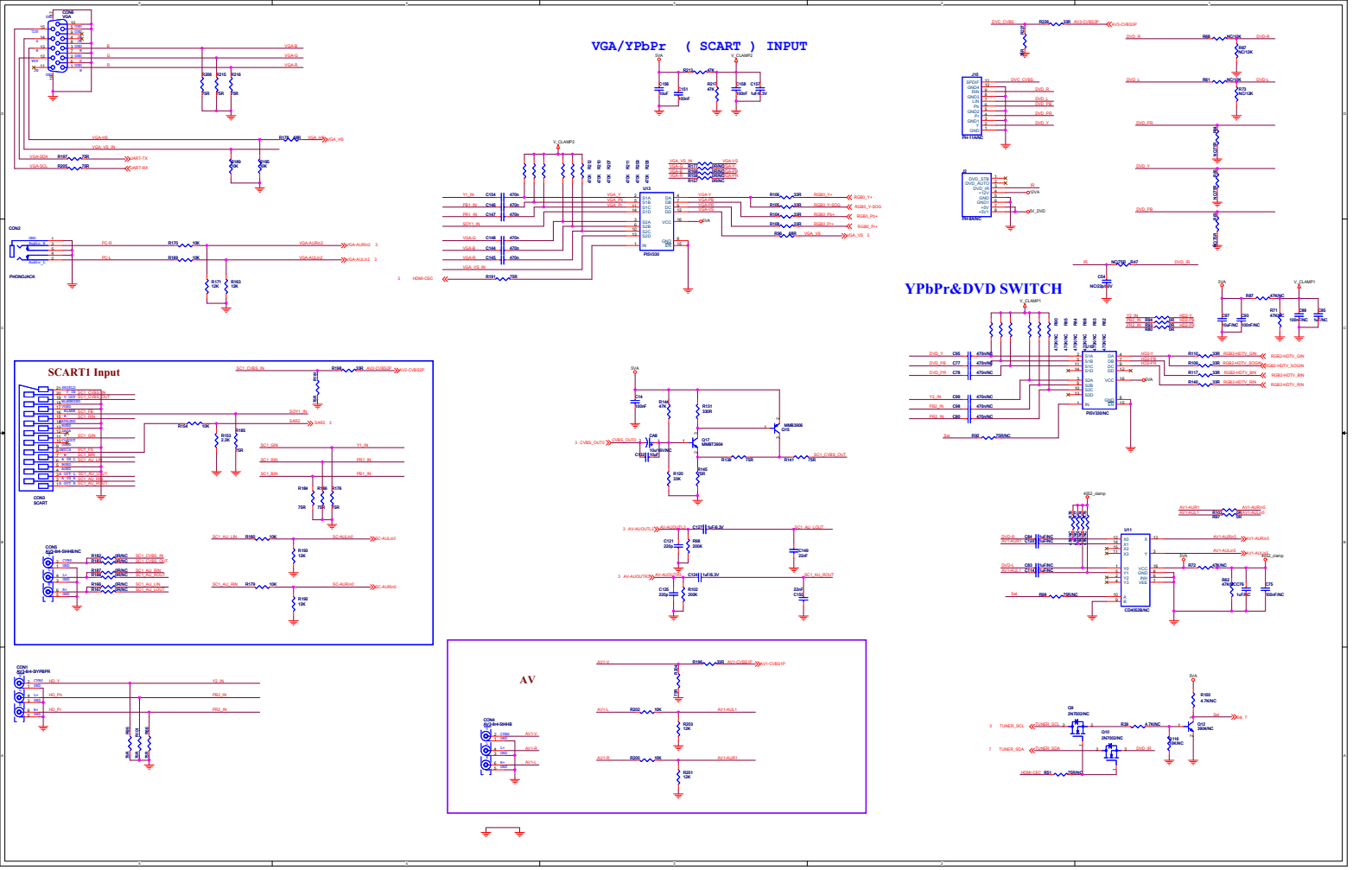
VGA/YPbPr (SCART) INPUT
YPbPr&DVD SWITCH
SCART1 Input
AV

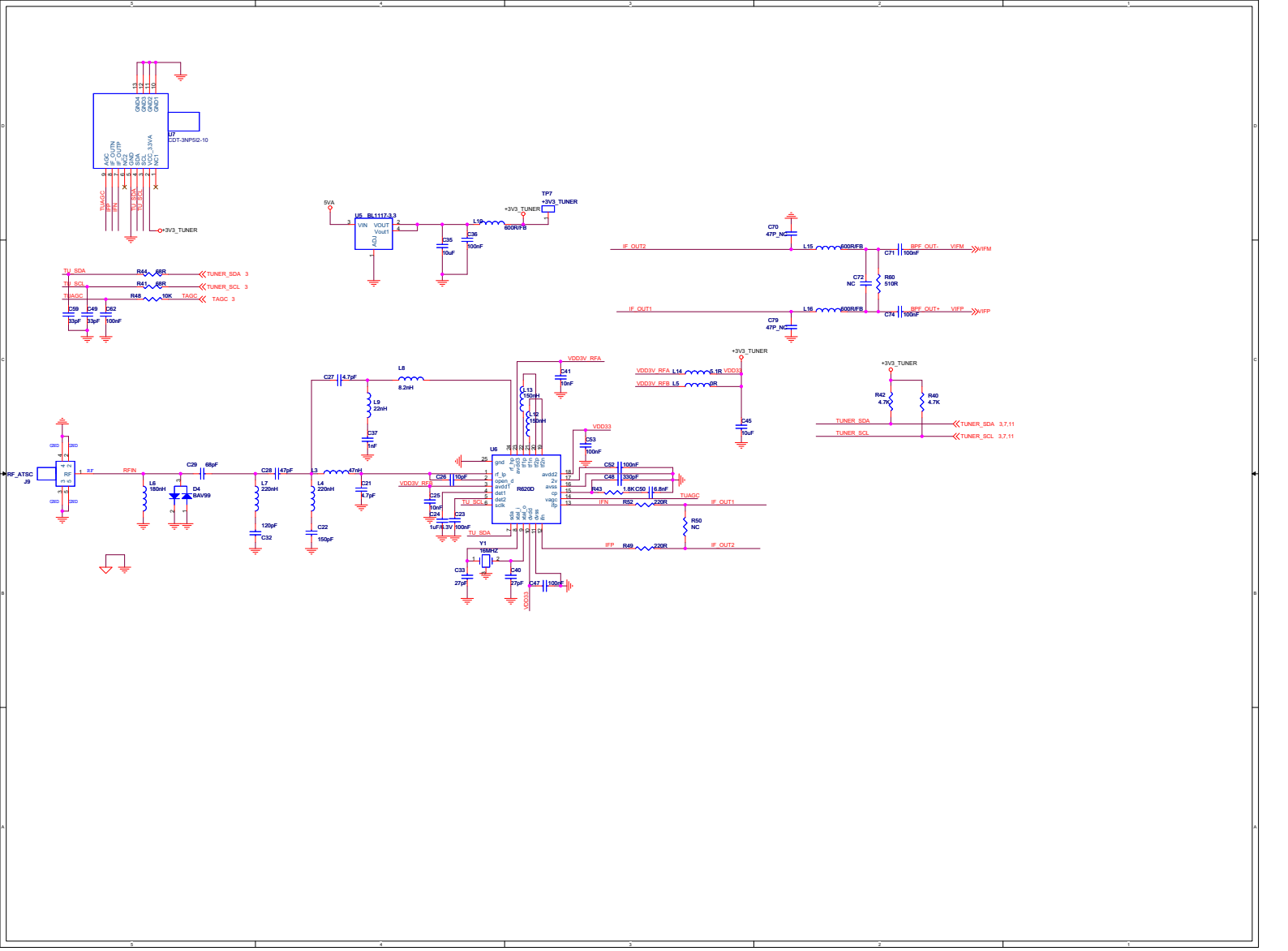
U7
CDT-3NPSI2-10
+3V3_TUNER
5VA
U5 BL1117-3.3
VIN
VOUT
Vout1
ADJ
C35
10uF
C36
100nF
L1P
600R/FB
TP7
+3V3_TUNER
TU_SDA
TU_SCL
TUAGC
R44 68R
R41 68R
R48 10K
TUNER_SDA 3
TUNER_SCL 3
TAGC 3
C59 33pF
C49 33pF
C62 100nF
IF_OUT2
IF_OUT1
C70 47P_NC
C79 47P_NC
L15 600R/FB
L16 600R/FB
C71 100nF
C74 100nF
BPF_OUT-
BPF_OUT+
VIFM
VIFP
C72 NC
R60 510R
VDD3V_RFA
VDD3V_RFB
L14 5.1R
L5 0R
VDD33
C41 10nF
C53 100nF
C45 10uF
R42 4.7K
R40 4.7K
TUNER_SDA 3,7,11
TUNER_SCL 3,7,11
RF_ATSC
J9
RFIN
C29 68pF
D4 BAV99
L6 180nH
C28 47pF
L7 220nH
C32 120pF
L3 47nH
L4 220nH
C22 150pF
C27 4.7pF
L9 22nH
C37 1nF
C21 4.7pF
L8 8.2nH
L13 150nH
L12 150nH
U6
R620D
C26 10pF
C25 10nF
C24 1uF/6.3V
C23 100nF
Y1 16MHZ
C33 27pF
C40 27pF
C47 100nF
C52 100nF
C48 330pF
R43 1.8K
C50 6.8nF
R52 220R
R50 NC
R49 220R
IFN
IFP
TUAGC

YDA1517P

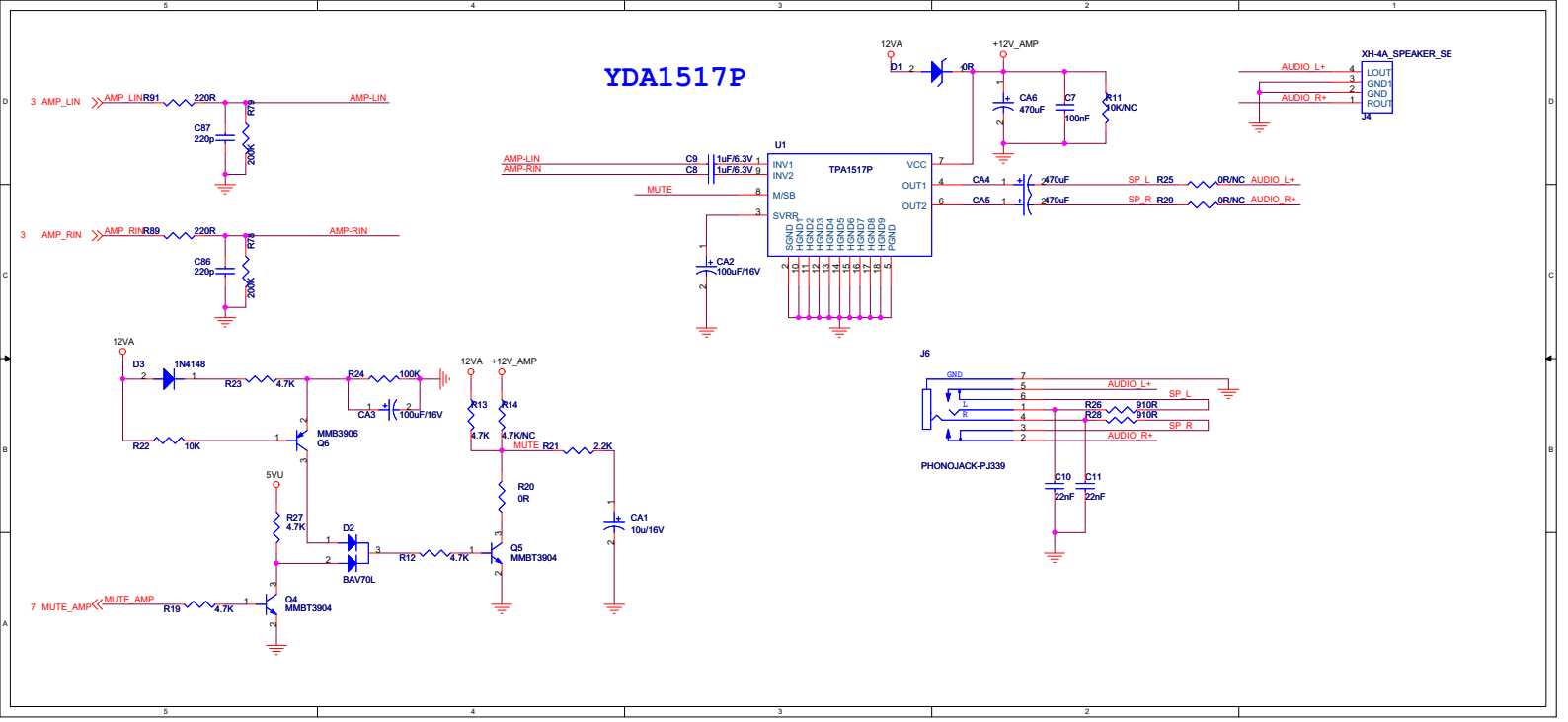
3 AMP_LIN
AMP_LIN
R91
220R
R79
200K
C87
220p
AMP-LIN
3 AMP_RIN
AMP_RIN
R89
220R
R78
200K
C86
220p
AMP-RIN
12VA
D1
0R
+12V_AMP
CA6
470uF
C7
100nF
R11
10K/NC
XH-4A_SPEAKER_SE
AUDIO_L+
AUDIO_R+
LOUT
GND1
GND
ROUT
J4
U1
TPA1517P
INV1
INV2
M/SB
SVRR
VCC
OUT1
OUT2
C9
1uF/6.3V
C8
1uF/6.3V
MUTE
CA2
100uF/16V
CA4
470uF
CA5
470uF
SP_L
R25
0R/NC
SP_R
R29
0R/NC
SGND
PGND
12VA
D3
1N4148
R23
4.7K
R24
100K
CA3
100uF/16V
R22
10K
MMB3906
Q6
12VA
+12V_AMP
R13
4.7K
R14
4.7K/NC
MUTE
R21
2.2K
R20
0R
CA1
10u/16V
5VU
R27
4.7K
D2
BAV70L
R12
4.7K
Q5
MMBT3904
7 MUTE_AMP
MUTE_AMP
R19
4.7K
Q4
MMBT3904
J6
GND
AUDIO_L+
SP_L
R26
910R
R28
910R
SP_R
AUDIO_R+
PHONOJACK-PJ339
C10
22nF
C11
22nF

Inverter PCB Principle Diagram

Model NO.: TF-LED19S2
PCB Name: Inverter PCB
Inverter PCB Model No. : HQ-LED58-1C5T

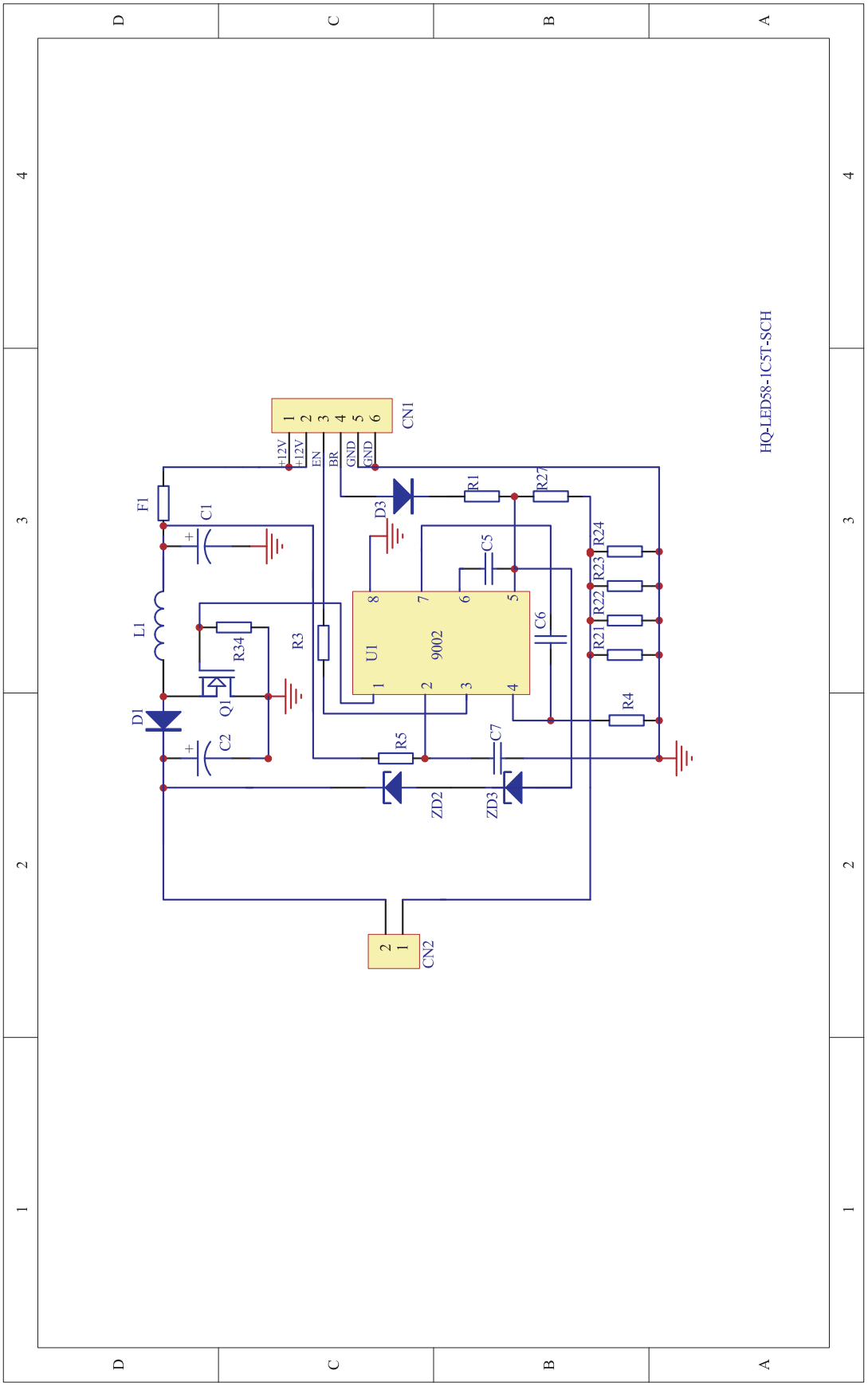

Inverter PCB Principle Diagram

Model NO.: TF-LED22S2
PCB Name: Inverter PCB
Inverter PCB Model No. : HQ-LED58-100

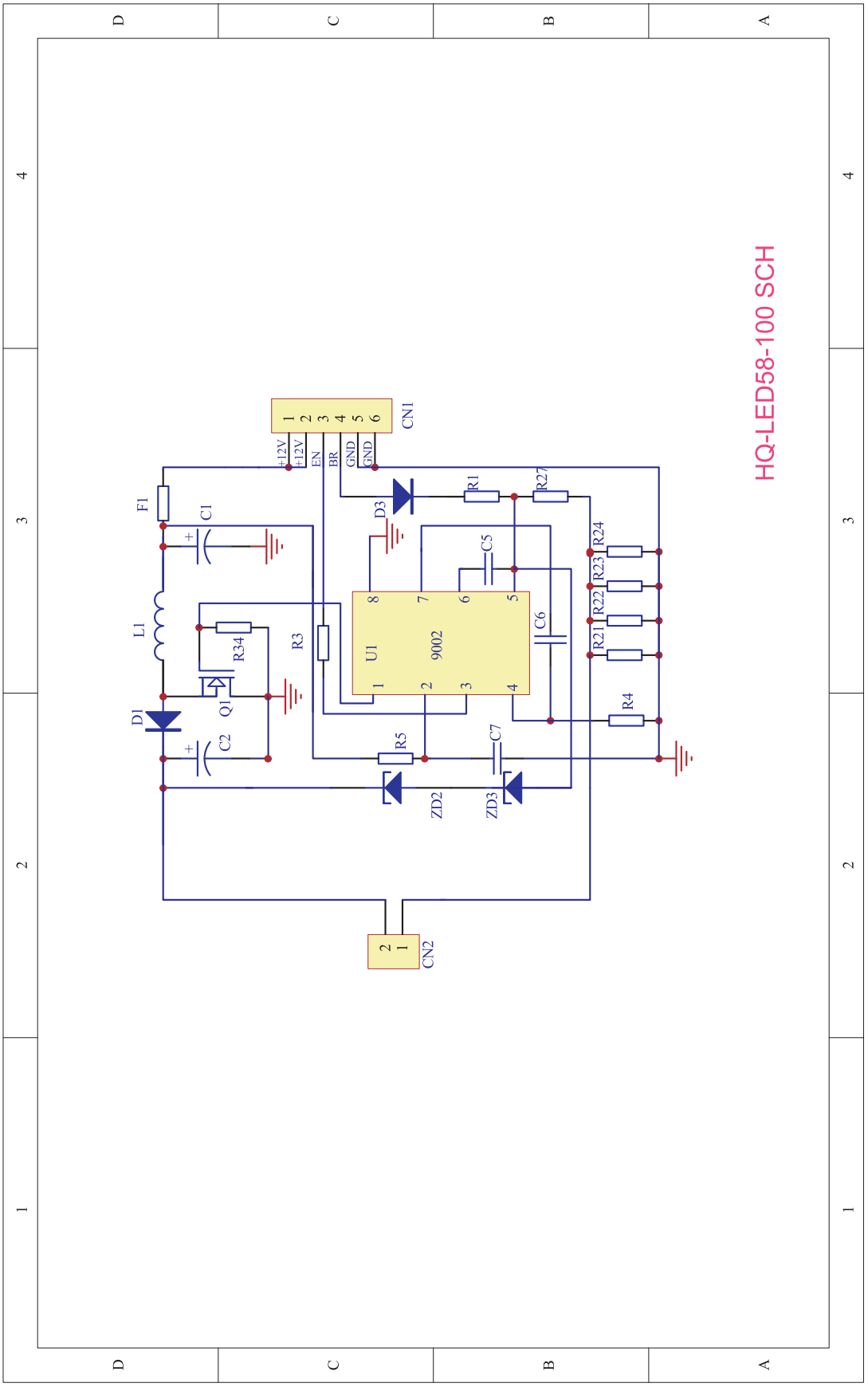

Inverter PCB Principle Diagram
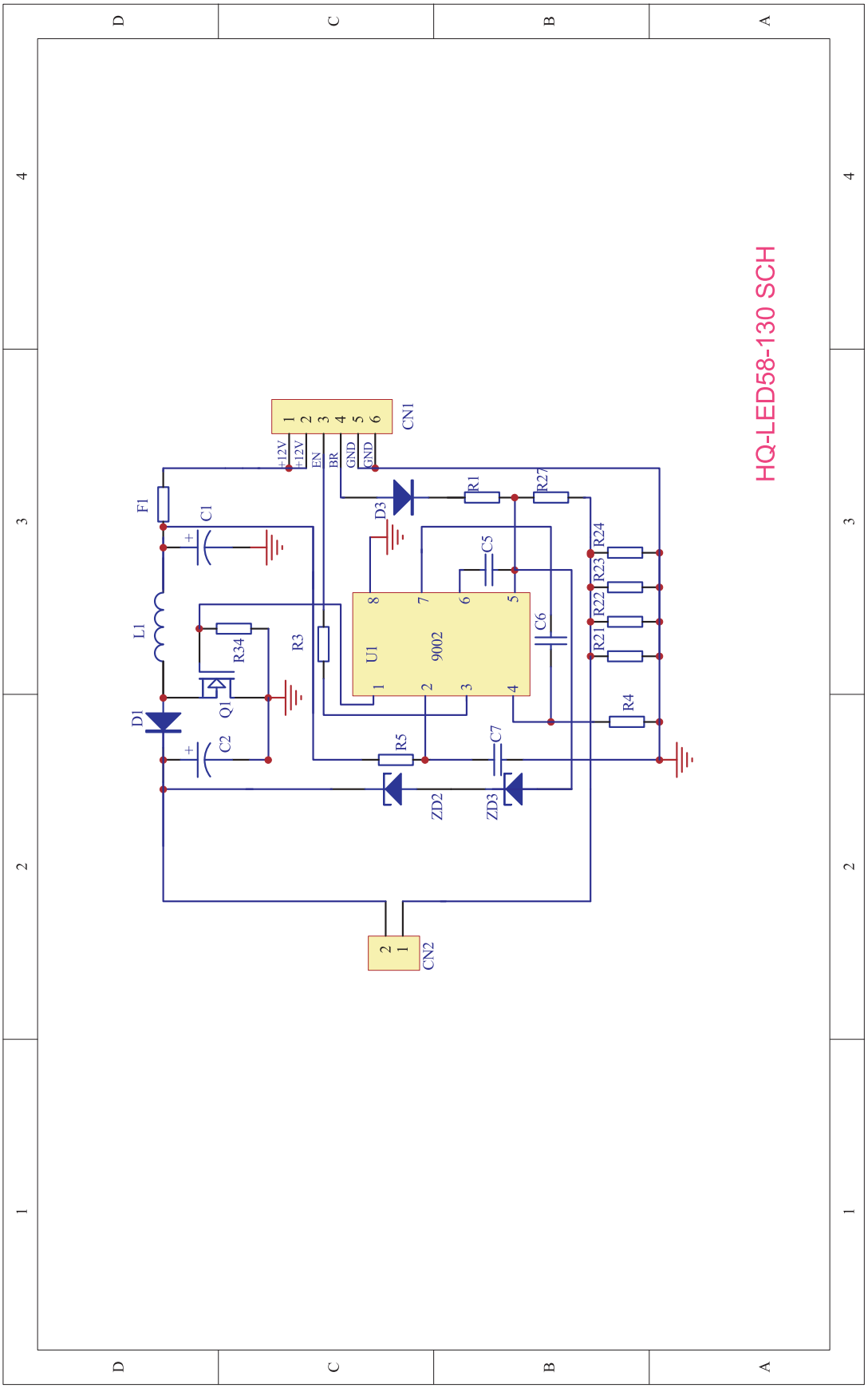
Model NO.: TF-LED24S2
PCB Name: Inverter PCB
Inverter PCB Model No. : HQ-LED58-130