TV Productor Service Manual

DATE： 2016.12.02

YOUR COMPANY NAME:

YOUR MODEL NAME:

Production & Function Describtion:

Action：CV512L-Q24 (20/24 inch DLEDTV)

Function：EARPHONE, VGA,AV IN,PC AUDIO,TV2(T2/T/C),COAX,HDMI,
USB,CI,MINI_YPbPr

TV System：PAL SECAM

Approved Signatures:

Approved By Customer Project Leader	Reviewed By Project Leader	Issued By D.C.C.

Express Luck Industrial Limited
Address:No.88,BaoTong,NanRoad,Xikeng,HengGangTown,LongGangDistric,Shenzhen,Guangdong, China
TEL ： 0086-0755-89739888 FAX ： 0086-0755-89739666

1. Basic Specifications

Working Temp：0～40℃
Storage Temp：-20～60℃
Humidity（Working）：10～90%
Humidity（Store）：10～90%
LED Lifespan（50 Lum，Tube current < Rating）：60000 hour（Il=4.5Ma 25℃）
MTBF:50000 hour (Panel Module NOT inculded)
Power requirement：Voltage 100~240 V 50 / 60 Hz
(Note: The above specifications are suitable for most of the TV models, and for your reference only.)

2. Maintenance & Safety

2.1 Safety Warning:

(1) The inside key components in the LED must be offered and replaced by qualified and

appointed manufacturer. Otherwise it may generate electricshocks, fires or other important unsafety cases.

(2) Don't try to change the circuits without authorized permission.

(3) Ensure to study the maintenance and service manual thoroughly before doing any of

the maintaining actions.

2.2 High Voltage Warning:

Please be highly noted the high voltages in the circuit.

2.3 Electricshocks and Fires Warning:

*Connect the insulate transformer between the AC current to the LCD before repairing the panel.

*Take care of the Soldering Pad related to the high voltage circuit. When there occurs

short-circuit case, please replace the overheated components in time.

*All protective equipments must be re-installed according to the original design.

*Check the rosin joints, stack welds and the insulations, ensure there is no objection attached.

2.4 Antistatic Warning:

*The inner circuit boards in the LCD TV are sensitive to the statics. Please take care of the

ESD protection when replace the circuit boards.

*The circuit boards must be packed by antistatic bags.

*Please wear antistatic ring and gloves when during repairing works.

2.5 Attention:

LVDSVDD – if the LCD is in 5V, it must be switched to the setting of 5V. And if the LCD is in

12V, it must be switched to the setting of 12V. (Switch setting: CN3 -- 5V or

12V)

3. Instruments

3.1 Multimeter:

Max Input Current : over 1A / Max Input Voltage : 500Vdc
Measurement Range : 10Mvr~100Vdc / Accuracy : 0.03%

3.2 Oscillograph

Frequency Band : over 20M /Input Impedance : over 1M
Input Capacitance : below 30pF / Max Input Voltage : 250V

3.3 PC: XGA (1024X768@60Hz)

3.4 HD Singal Generator: 480P 576P 720P 1080i@50/60HZ

3.5 DVD Player: Audio/Video output, S-VIDEO output, HDMI output.

3.6 VGA cable, S-VIDEOcable, RCA cable, YpbPr cable and HDMI cable.

4. Software Upgrade

The chip inside the LCD is designed with a FLASH ROM memory program: it can be erased
and reprogrammed, it can be also updated via the USB port. the program is related to the chip fucntion ---Different functions of chips need to be planted with different versions of prgrams.

Please ugrade the new software by the USB port the instruction steps below:

-------Please copy the new software to the USB
-------Power ON the TV and press MENU to display the main menu ,then press ◁ / ▷ to the
OPTION menu. And then select the software in the root of your USB memory , Press ENTER .then press ◁ to update and ▷ to cancel.

Remarks: When the first upgrading is finished, the action of turning on the tv will be a little slow. So when you turn on the TV at the first time, you need to press the "power" key on the remote control several times until you turn on the tv. Turning on the TV at the first time is very important, you need to operate it carefully to avoid the upgrading is not successful.

LED TV CONTROL BOARD SPECIFICATION

MODEL : CV512L-Q24-11

Approved by Cultraview		Approved by Customer	
AUTHOR :	YuKun.Lin	Comments :	
CHECKED BY :		CHECKED BY :	
APPROVED BY :		APPROVED BY:	
DATE:	2016.03.29	DATE:	
Company's seal:			

Please return us one original approved by you with your signatures.
客户承认签章后敬请寄回正本一份

CULTRAVIEW

Content 目录

1. GENERAL DESCRIPTION（概述）.....4

2. PICTURES（主板端口图片）.....6

3. FEATURES（特性说明）.....8

4. PRESET MODE FOR USB（USB 多媒体支持格式 ）.....10

5. ELECTRICAL CHARACTERISTICS（电气特性）.....12

6. PROTECTION CAPABILITY（保护性能）.....13

7. INTERNATIONAL STANDARDS (国际标准).....14

8. INTERFACE DEFINITION（接口定义）.....15

9. MECHANICAL DIMENSION（结构尺寸图）.....19

10. SCHEMATICS OF IR BOARD & KEY BOARD (遥控和按键原理图).....21

11. APPLICATION REQUIREMENT（应用注意事项）.....22

12. MOUNT PRECAUTIONS（组装注意事项）.....23

13. List of key components（关键器件清单）.....24

CULTRAVIEW

All rights reserve, if there is discrepancy,please refer to the actual product

THE CHANGE LIST OF UPGRADES（升级变更列表）

Version	Description	Page	Redaction	Checked	Date
V1.0	First Release	ALL	YuKun.Lin		2016.03.29

CULTRAVIEW

All rights reserve, if there is discrepancy,please refer to the actual product

1. GENERAL DESCRIPTION（概述）

- **CV512L-Q24-11's** power part is an energy-efficient ultrathin DC-line switching power supply unit, with max 50W/115VAC input , 40W output. It fits to 24″ LED backlight panel.

  CV512L-Q24-11方案的电源部分为高效率开关电源，最大输入功率为50W,总输出功率为40W，支持24寸LED背光屏.
- **CV512L-Q24-11** is a digital and analogue TV board, it can receive the analog television (PAL/SECAM) and digital television (DVB-T/T2/C/S2) signal. It is suitable for the market in Europe (include UK), Australia etc.

  CV512L-Q24-11是数模一体电视主板，它可以接收模拟电视(PAL / SECAM)和数字电视(DVB-T /T2/ C/S2)信号。适用于欧洲（包括UK），澳洲等市场。
- Supports DVB-T MPEG-4 extended ASP up to 1080p@30fps.

  支持DVB-T MPEG-4 扩展ASP到1080p@30fps。
- Supports H.264 MP/HP@L4.1 for SD and HD decoding.

  支持 H.264 MP/HP@L4.1 SD 和 HD 解码。
- Supports USB 2.0 multimedia play, supports audio and video play; supports txt and picture browse.

  支持USB 2.0多媒体播放，支持音频和视频播放；支持文字、图片浏览。
- Analogue and digital HD port input signal largest support 1080P.

  模拟和数字高清端口输入信号最大支持1080p。
- Support analogue & digital 1000 Pages Teletext.

  支持模拟与数字 1000 页图文。
- The largest support various TFT-LCD 1920x1080 resolutions module.

  最大支持各种TFT-LCD 1920x1080分辨率模块。
- The HDMI supports 1.4a, the HDCP supports 1.2.

  HDMI 支持1.4a，HDCP支持1.2。
- The HDMI channel can support ARC or MHL function.

  HDMI通道支持ARC或MHL。
- 3-D video noise reduction.

CULTRAVIEW

支持3D视频降噪。

- Enhanced motion adaptive 3D Y/C separation comb filter for NTSC/PAL system.

  增强动态自适应3D Y/C分离梳状滤波器的NTSC/PAL系统。

- Supports USB update.

  支持USB升级

- Supports Video SDTV at 480i/576i and 480p/576p.

  支持视频480i/576i 和480p/576p的标清电视。

- Supports Video HDTV at 720P and 1080i and 1080P.

  支持视频720P、1080i 和1080P的高清电视。

- Supports PC RGB input up to UXGA@60Hz(165MHz).

  PC RGB输入最大支持UXGA@60Hz(165MHz)。

- Reliable EMC and ESD handle

  可靠的 EMC 和防静电处理

CULTRAVIEW

All rights reserve, if there is discrepancy,please refer to the actual product

2. PICTURES（主板端口图片）

The optional function are marked with “*”.
带“*”为可选功能

Europe Board Type（欧洲版型）:
FRONT VIEW （前视图）

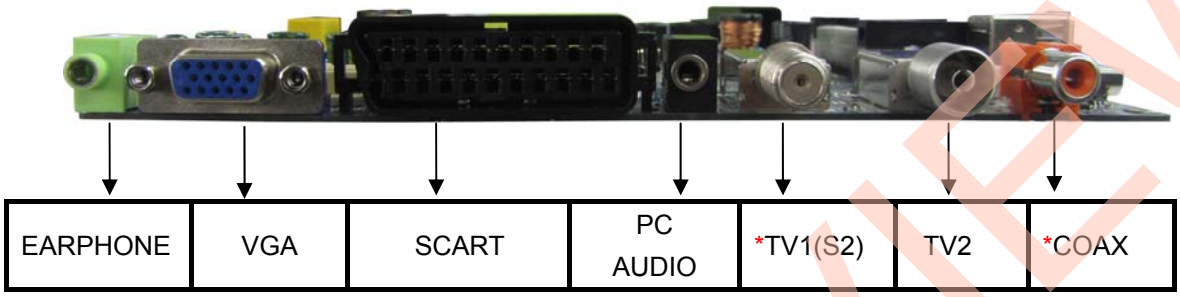

SIDE VIEW（侧视图）

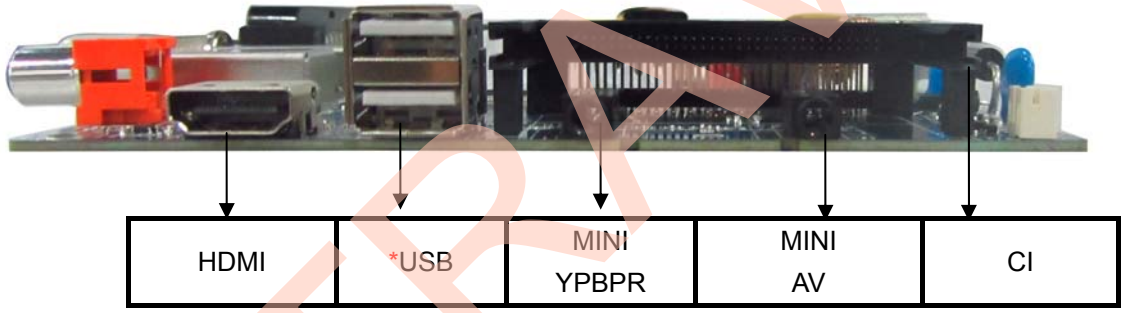

Australia Board Type（澳洲版型）:
FRONT VIEW （前视图）

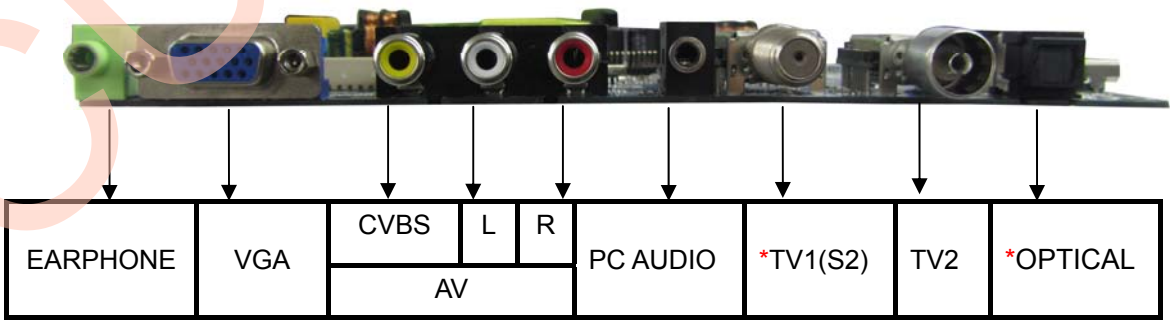

CULTRAVIEW

All rights reserve, if there is discrepancy,please refer to the actual product

SIDE VIEW（侧视图）

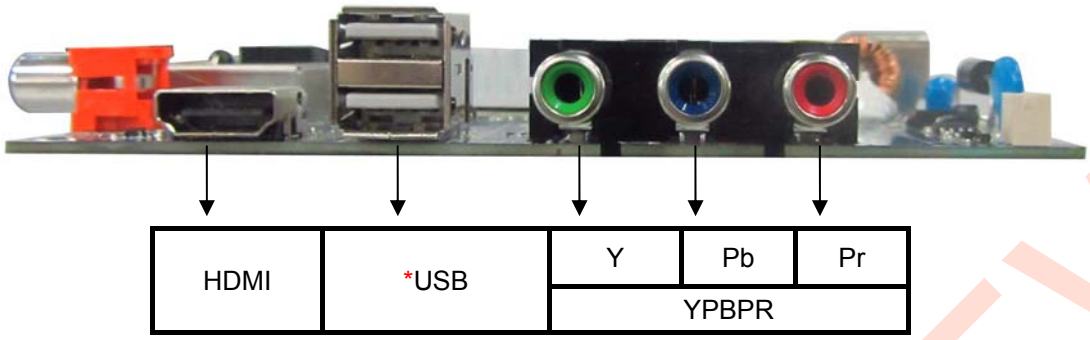

EXTERNAL CONNECTORS

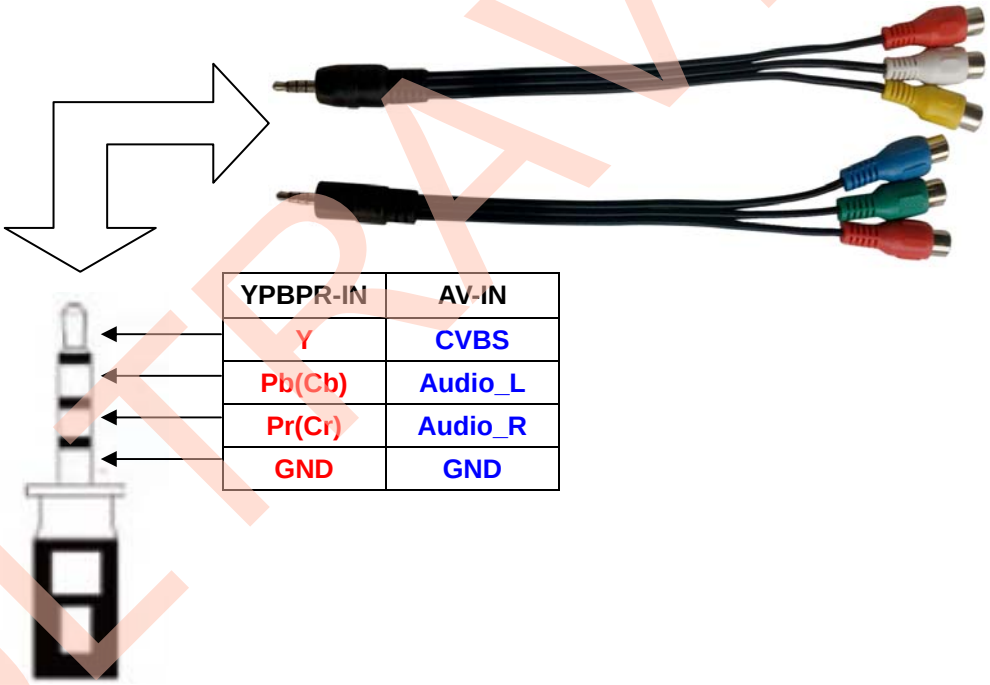

YPBPR-IN	AV-IN
Y	CVBS
Pb(Cb)	Audio_L
Pr(Cr)	Audio_R
GND	GND

CULTRAVIEW

All rights reserve, if there is discrepancy,please refer to the actual product

3. FEATURES（特性说明）

PANEL	Type（类型）	TFT-LCD/LED
	Resolution（最大分辨率）	Max. 1920X1080
	Interface（接口）	Single/ Double LVDS
	Voltage (电压)	3.3V, 5V, 12V
ATV	Receiving range（接收范围）	48.25MHz – 863.25MHz
	Input Impedance（输入阻抗）	75Ω
	Video System（视频制式）	PAL ,SECAM
	Sound System（声音制式）	BG, DK, I
		NICAM/A2
DTV	Receiving range（接收范围）	VHF (174MHz – 230MHz)
		UHF (474MHz - 862MHz)
	Input Impedance（输入阻抗）	75Ω
	Bandwidth（带宽）	7MHz/8MHz
	Modulation（调制）	DVB-T:COFDM QPSK, 16QAM, 64QAM
		DVB-T2: COFDM QPSK, 16QAM ,64QAM , 256QAM
		DVB-C:16QAM, 32QAM, 64QAM, 128QAM, 256QAM
		DVB-S2: QPSK, 8PSK
	Video System（视频制式）	MPEG-2 MP@ML, MPEG-2 MP@HL, H.264
	Sound System（声音制式）	MPEG-1 Layer 1/2, MPEG-2 Layer 2, DD, DD+
RGB	Video Level（视频信号幅度）	0.7Vp-p@75ohm
	Format（格式）	Max UXGA@60Hz
AV	Color system（彩色制式）	PAL/NTSC/SECAM
	Video Level（视频信号幅度）	1Vp-p@75ohm
YpbPr	Video Level（视频信号幅度）	Y:1Vp-p@75ohm, PbPr:0.7Vp-p@75ohm
	Format（格式）	480i, 480p, 576i, 576p, 720p, 1080i, 1080p
HDMI	Format（格式）	480i, 480p, 576i, 576p, 720p, 1080i, 1080p
SCART	Video（视频）	CVBS&RGB input, CVBS output

CULTRAVIEW

SCART	Video output/input （视频输出/输入）	RBG: 0.7Vp-p@75ohm	
		CVBS: 1Vp-p@75ohm	
	Audio output/input （音频输出/输入）	500mVrms	
AUDIO INPUT	PC Audio	Audio Level	0.2----2 Vrms
	CVBS Audio		
	Component audio		
AUDIO OUTPUT	Max Output Power （最大输出功率）	2 X3W @ 4ohm THD<10%	
Keyboard	Power，Menu，Source，CH+，CH-，VOL+，VOL- 电源，菜单，信号源，频道+，频道-，声音+，声音-		

CULTRAVIEW

All rights reserve, if there is discrepancy,please refer to the actual product

4. PRESET MODE FOR USB（USB 多媒体支持格式 ）

USB FORMAT MODE

Media（媒体）	File Exit.（扩展名）	Codec （编码解调器）		Remark
		Video（视频）	Audio（音频）	
MOVIE	.avi	MJPEG	MP3, WMA, AAC,PCM (AC3 Need license)	The Max Resolution And Frame Rate: 1280X720@30fps Max Data Rate: 20 Mbps
		Xvid,MPEG-4,H.264, WMV9/VC-1 (Divx Need license)		The Max Resolution And Frame Rate:1080p@30fps Max Data Rate: 20 Mbps
	.mp4/ .mpeg4	MPEG-2,MPEG-4,H.264,Xvid,MJPEG	MP3, AAC,PCM (AC3 Need license)	
	.ts/ .trp	MPEG-1,MPEG-2,H.264,VC-1	MP1/MP2/MP3,AAC(AC3 Need license)	
	.mpg/ .mpeg	MPEG-1,MPEG-2	MP1/MP2/MP3,AAC,PCM (AC3 Need license)	
	.mkv	MPEG-2/4,H.264, Xvid,RV30,RV40,VC-1(Divx Need license)	MP3,AAC, PCM,COOK (AC3 Need license)	
	.mov	MPEG4,H264,MJPEG	MP3,AAC,PCM,AMRNB	The Max Resolution And Frame Rate:1080p@30fps Max Data Rate: 20 Mbps
	.dat	MPEG-1	MP1	
	.vob	MPEG-2	MP1/MP2/MP3,PCM (AC3 Need license)	
	.rm/ .rmvb	RV30,RV40	AAC,COOK	Resolution: 800x600(RV30) 1280x720(rv40)
PHOTO	.jpg	Progressive DCT		Max Resolution:

CULTRAVIEW

PHOTO				1920×1080
	.jpeg	Baseline DCT		Max Resolution: 7680×4320
	.bmp	----		Max Resolution: 1920×1080 Pixel Depth: 8/24/32 bit
	.png	----		Max Resolution: 1920x1080
MUSIC	**.mp3**	---	MP3	Sample Rate: 32K~48KHz Bit Rate: 32K~320Kbps Channel: Mono/Stereo
	.wmv	---	PCM	
	.mp4/ .aac/ .m4a	---	AAC	Sample Rate: 8K~48KHz Bit Rate: 24K~384Kbps Channel: Mono/Stereo
TEXT	**.txt**	ANSI/UNICODE GB/UTF8		File Size: Max 10MB

Note：

1）This product includes the following optional patented technologies : Dolby, DIVX, SRS , etc. If you need to use these patented, please provide the patent license to us, so that the product can meet your requirements.

(此产品包括如下可选的专利技术：DOLBY、DIVX、SRS 等，如您需要开通这些功能，请提前提供相关专利许可给到我司，以便产品能满足您的要求。)

2）USB only support PHOTO, MUSIC and MOVIE. The system automatically classified files, only show the supported files.

3）Support hard disk，the maximum storage capacity is **1T**.

4) Photo non-support EXIF format.

5) Flash non-support animation.

6) Support for text files.

CULTRAVIEW

5. ELECTRICAL CHARACTERISTICS（电气特性）

5.1 Input Electrical Specifications(输入特性)

Input	Minimum	Nominal	Maximum	Unit
Voltage	90	115/230	264	Vac
Current	——	——	1.5	A
Frequency	47	50/60	63	Hz
Efficiency		≥80%min(Full load with input AC voltage of 115Vac @ 60Hz and 230Vac @ 50Hz)		
Standby Power Consumption		≤0.5W At 240Vac input and no load condition		
Inrush current		Cannot be damaged components		
Leakage Current		Less Than 0.35mA, 240Vac input		
Input Fuse		T3.15A/250VAC		

5.2 LED Driver Power Output Connector& out put characteristics (LED 背光供电控制接口与输出特性)

注意：

1．标准配置可与较多恒流规格任意搭配。

2．可通过软件控制背光电流大小，具体的背光电流值依据客户的具体需求而定。推荐电流在600mA以内。

3. **CV512L-Q24-11**匹配背光功率15W以下，匹配背光电压范围18-60V间，主推单路背光输出。

Notice：1.Standard configurations above could match any following backlight Spec.

2.Backlight current can be controlled by software according to customer's requirement. It is recommended that the current should less than 600mA.

3. **CV512L-Q24-11**with backlight power under 15W, and backlight voltage between 18-60V. It mainly for single backlight output.

电源、背光电压功率

Power, Backlight voltage and power value,

【功率:40W】电源输出12V;恒流：18V-54V/15W

【Power:40W】 Power Output 12V;backlight voltage and power value: 18V-60V/15W

Location（位置）: PJ1

Pin assignments: Table.

Pin	Pin connection	Function
1	LED+	LED power supply
2	LED-	LED current sense for string

CULTRAVIEW

Location（位置）: PJ2

Pin assignments: Table.

Pin	Pin connection	Function
1	LED+	LED power supply
2	LED-	LED current sense for string
3	LED-	LED current sense for string

Location（位置）: PJ4

Note: PJ4 :（直插 间距是 2.0 毫米)

Pin assignments: Table.

Pin	Pin connection	Function
1	LED-	LED current sense for string
2	LED-	LED current sense for string
3	LED+	LED power supply
4	LED+	LED power supply
5	LED-	LED current sense for string
6	LED-	LED current sense for string

CULTRAVIEW

6. PROTECTION CAPABILITY（保护性能）

LED Short Protection: （LED 短路保护）

Auto restart (自动恢复)

LED Open Protection: （LED 开路保护）

Shut down or auto restart （关断或自动恢复）

Fuse protection（保险丝过流保护）

The Fuse inside the power supply shall open when the AC input current is over the rated current of fuse. This Fuse protection will cause switching power supply to fail.（当 AC 输入电流超过电源内置保险丝的额定电流时，保险丝必须熔断，呈开路状态，保险丝保护启动后电源将不能启动。）

7. INTERNATIONAL STANDARDS (国际标准)

EMI standards（EMI 标准）

The power supply shall compliance with the following radio disturbance Criterion.

该电源应符合下列无线电干扰标准。

Sound and television broadcast receivers and associated equipment

EN55013	Sound and television broadcast receivers and associated equipment radio disturbance characteristics limits and methods of measurement
GB13837	声音和电视广播接收机及有关设备无线电干扰特性限值和测试方法
FCC CFR 47 Part 15 subpart B 美国联邦通信法规第 **47** 卷 **15** 章内无意式的辐射器材的相关规定	

EMS standards（EMS 标准）

- Electrostatic Discharge Immunity Test: IEC-1000-4-2 8KV, Criteria B
  （防静电测试标准：IEC-1000-4-2 touch discharge ±4KV,air discharge ±8KV, Criteria B）
- EFT/Burst Immunity Test: IEC-1000-4-4 1KV, Criteria B
  （快速脉冲群测试标准：IEC-1000-4-4 1KV, Criteria B）

Safety Compliance （安规依据）

Design to meet : IEC60950 / 2005; IEC60065

（设计依据：IEC60950 / 2005; IEC60065）

Isolation（绝缘性能）

Insulation resistance（绝缘阻抗）

Input To Output	DC500V 50MΩmin (at room temperature)
Input To PG	DC500V 50MΩmin (at room temperature)

Insulation voltage（绝缘耐压）

Input To Output	3500Vac 50Hz 1minute ≤10mA
Input To PG	1500Vac 50Hz 1minute ≤10mA

CULTRAVIEW

8. INTERFACE DEFINITION（接口定义）

All jacks recognize the square pad as first pin.

The optional connectors and terminals are marked with“*”.
带“*”为可选连接器和端子

J4 (2X15pin/2.0mm)：LVDS Interface

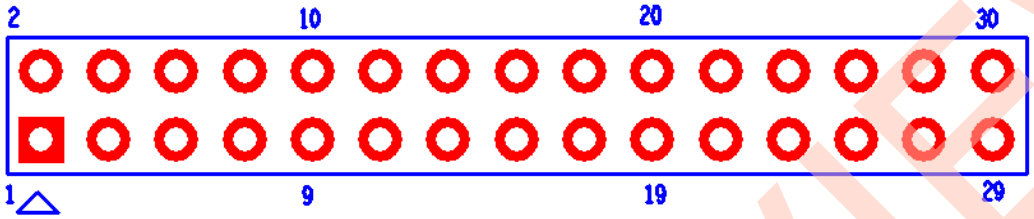

NO.	SYMBOL	DESCRIPTION
1	VCC	Power Supply For Panel
2	VCC	Power Supply For Panel
3	VCC	Power Supply For Panel
4	GND	Ground
5	GND	Ground
6	NC	NC
7	RXO0-	LVDS ODD 0- Signal
8	RXO0+	LVDS ODD 0+ Signal
9	RXO1-	LVDS ODD 1- Signal
10	RXO1+	LVDS ODD 1+ Signal
11	RXO2-	LVDS ODD 2- Signal
12	RXO2+	LVDS ODD 2+ Signal
13	GND	Ground
14	GND	Ground
15	RXOC-	LVDS ODD Clock- Signal
16	RXOC+	LVDS ODD Clock + Signal
17	RXO3-	LVDS ODD 3- Signal
18	RXO3+	LVDS ODD 3+ Signal
19	RXE0-	LVDS EVEN 0- Signal
20	RXE0+	LVDS EVEN 0+ Signal
21	RXE1-	LVDS EVEN 1- Signal
22	RXE1+	LVDS EVEN 1+ Signal
23	RXE2-	LVDS EVEN 2- Signal
24	RXE2+	LVDS EVEN 2+ Signal
25	GND	Ground
26	GND	Ground
27	RXEC-	LVDS EVEN Clock- Signal
28	RXEC+	LVDS EVEN Clock + Signal

CULTRAVIEW

29	RXE3-	LVDS EVEN 3- Signal
30	RXE3+	LVDS EVEN 3+ Signal

J8 PANEL POWER SUPPLY (3PIN/2.54)

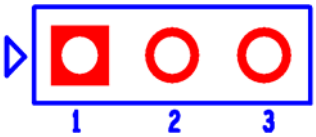

NO.	SYMBOL	DESCRIPTION
1	5V	5V Panel Power supply
2	VCC	Panel Power supply
3	12V	+12V Panel Power supply

***J6 PANEL POWER SUPPLY (2PIN/2.54)**

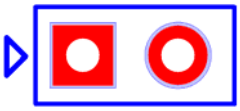

NO.	SYMBOL	DESCRIPTION
1	3.3V	+3.3V Panel Power supply
2	VCC	Panel Power supply

***J9(3pin/2.0mm) IIC CONNECTOR**

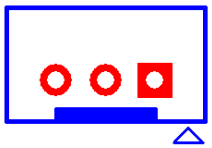

NO.	SYMBOL	DESCRIPTION
1	SDA	IIC DATA
2	SCL	IIC CLOCK
3	GND	Ground

JA10 SPEAKER CONNECTOR(4PIN/2.54)

NO.	SYMBOL	DESCRIPTION
1	ROUT	Audio Right channel Output
2	GND	Ground
3	GND	Ground
4	LOUT	Audio Left channel Output

***J13(4pin/2.0): INTERNAL USB**

CULTRAVIEW

NO.	SYMBOL	DESCRIPTION
1	GND	Ground
2	DP	USB Data+
3	DM	USB Data-
4	+5V	+5V DC Power for USB

***J14 (8pin/2.0): DVD POWER&CONTROL**

NO.	SYMBOL	DESCRIPTION
1	DVD_STB	DVD Standby Control
2	DVD_AUTO	DVD AUTO
3	DVD_IR	IR Data Transfer to DVD
4	+12V	+12V DC Power Supply for DVD
5	GND	Ground
6	GND	Ground
7	+5V	+5V DC Power Supply for DVD
8	+5V	+5V DC Power Supply for DVD

J16 (14pin/2.0): KEY&IR&LED CONNECTOR

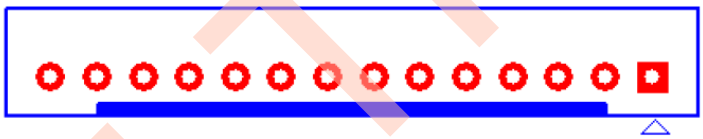

NO.	SYMBOL	DESCRIPTION
1	GND	Ground
2	K7	Key7(Reserved)
3	ON/OFF	POWER KEY
4	VOL+	VOL+ KEY
5	VOL-	VOL- KEY
6	INPUT	INPUT KEY
7	CH+	CH+ KEY
8	CH-	CH- KEY
9	MENU	MENU KEY
10	GND	Ground
11	IR	IR Receiver
12	LED_G	Green Indicator
13	LED_R	Red Indicator

CULTRAVIEW

14	+5V	+5V DC Power Supply

***J19 (11pin/2.0)：INTERNAL YPBPR&AUDIO CONNECTOR**

NO.	SYMBOL	DESCRIPTION
1	GND	Ground
2	Y	YpbPr-Y Input
3	GND	Ground
4	Pr	YpbPr-Pr Input
5	GND	Ground
6	Pb	YpbPr-Pb Input
7	LIN	Left Channel Input
8	GND	Ground
9	RIN	Right Channel Input
10	GND	Ground
11	NC	NC

J30(2pin/2.0): POWER Debug

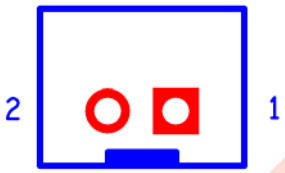

NO.	SYMBOL	DESCRIPTION
1	+12V	+12V power supply
2	GND	Ground

PCON1: AC INPUT CONNECTOR (交流输入接口)

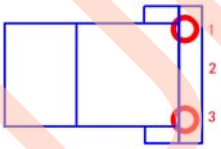

NO.	SYMBOL	DESCRIPTION
1	L	LIVE（火线）
2	NC	NC
3	N	NEUTRAL（零线）

CULTRAVIEW

All rights reserve, if there is discrepancy,please refer to the actual product

9. MECHANICAL DIMENSION（结构尺寸图）

Europe Board Type :

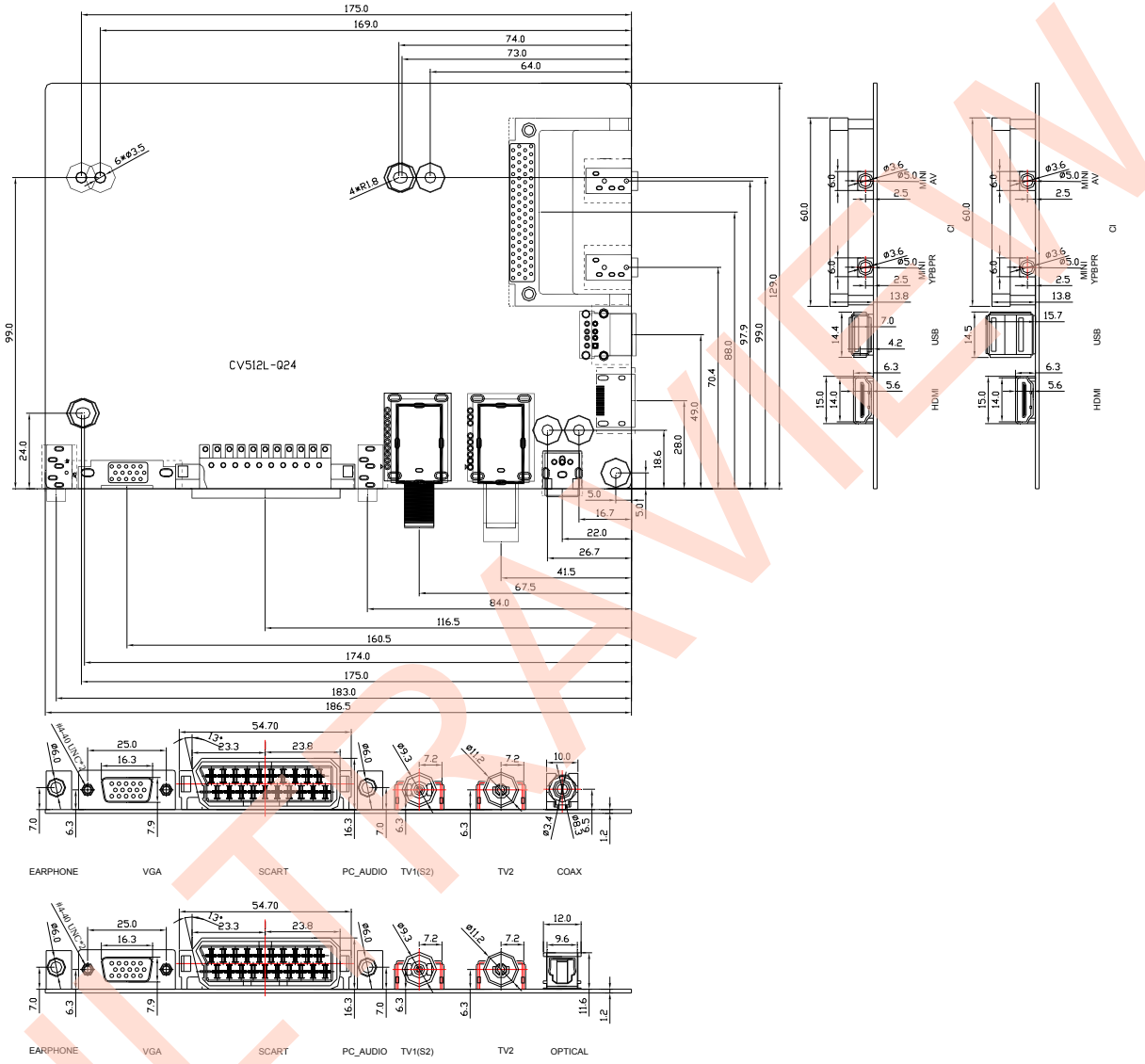

The thickness of PCB board: 1.2 mm
Component the tallest altitude: 16.5mm
Install diameter inside the bore 3.5 mm

CULTRAVIEW

All rights reserve, if there is discrepancy,please refer to the actual product

Australia Board Type：

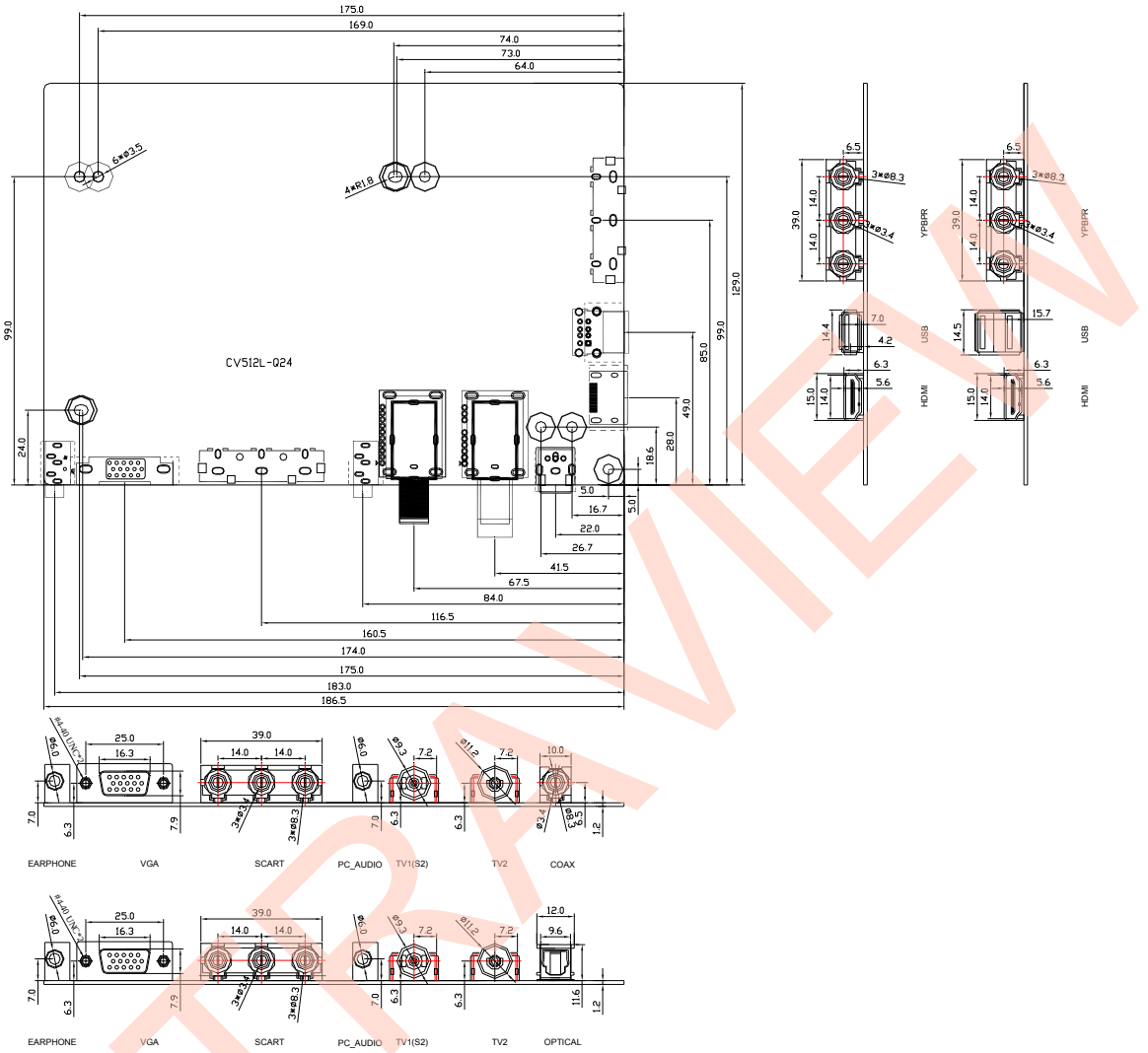

The thickness of PCB board: 1.2 mm
Component the tallest altitude: 16.5mm
Install diameter inside the bore 3.5 mm

CULTRAVIEW

All rights reserve, if there is discrepancy,please refer to the actual product

10. SCHEMATICS OF IR BOARD & KEY BOARD

(遥控和按键原理图)

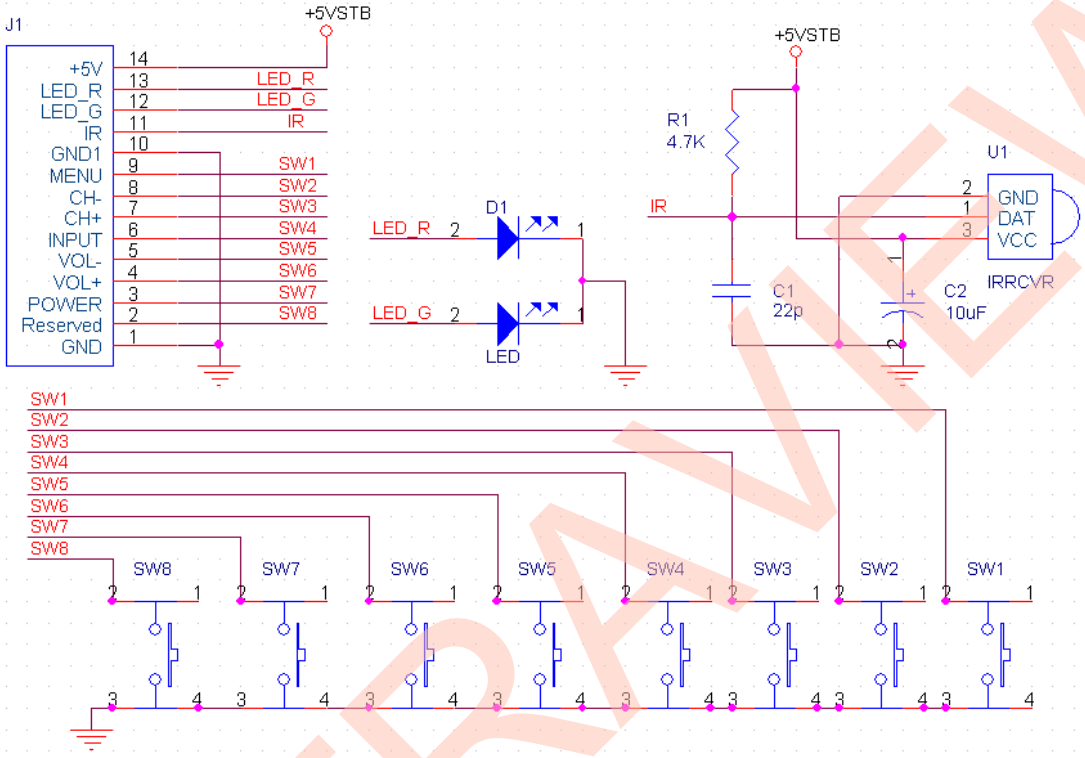

CULTRAVIEW

All rights reserve, if there is discrepancy,please refer to the actual product

11. APPLICATION REQUIREMENT（应用注意事项）

- Relative humidity ≤80%
  相对湿度≤80%
- Store temperature -10~+60 ℃
  存储温度-10~+60 ℃
- Use temperature 0~+40 ℃
  使用温度 0~+40 ℃
- The procedure of the whole machine assembles and transports need to attend ESD transaction.
  整机装配和运输过程中需要注意 ESD 保护。
- The hole of each port does not be opened too small, especially the HDMI port hole, avoid the whole set morphing to cause the extrusion of port when installing.
  每个端口的开孔不应开得太小，尤其是 HDMI 端口，避免装配挤压导致端口变形。
- The hole of RGB socket is recommended the situation of not using the screw stationary on the RGB socket to fix on the structure board.
  VGA 端口上的螺丝柱建议是不使用螺丝固定到结构挡板上。
- The connected wire which between the other boards and this board can't be leaded too long, or affect performance and image quality.
  其他外接模块与电视主板的连接线长度不要太长，以免影响性能和图像质量。
- The whole set inner wires matching reasonable, each connected wire try to not directly cross the PCB board, especially cross over from the main IC and power module, avoid affect the whole set EMC performance.
  整机内部线材装配要合理，各连接线尽量不直接穿过 PCB 主板，尤其是横跨主芯片和电源模块，避免影响整机的 EMC 性能。
- in order to obtain better EMC effect of the whole set, we suggest the LVDS twisted pair wire between the main board and panel must be tied up well and try to use shielding wire. If it's possible, try to put on the magnetic belt ring on the wire which near the board terminal.
  为了获得更好的整体 EMC 效应，我们建议主板和面板之间的 LVDS 双绞线必须绑好，尽量使用屏蔽线。如果可能的话，尽量把磁环放在靠近主板端。
- The HDMI and HDCP on the main board are all passed the related certifications, but we just provide testing certification of the inner usage standard. If you need to use legal HDMI and HDCP, please apply related association as formal member by yourself.
  主板上的 HDMI 和 HDCP 已通过了相关的认证，但我们只提供内部使用的标准的测试认证。如果您需要使用合法的 HDMI 和 HDCP 认证，请先成为相关协会的会员。
- There is ROHS identification on the board and package, the board match ROHS standard.
  主板和包装带都符合 ROHS 标准。

CULTRAVIEW

12. MOUNT PRECAUTIONS（组装注意事项）

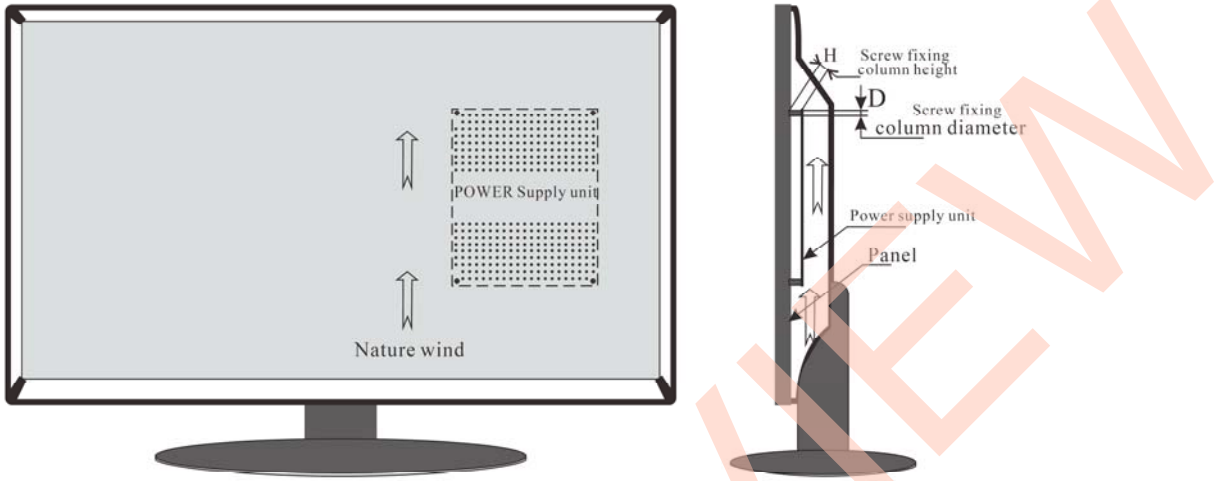

Note1: The H should be greater than or equal 9mm, otherwise you must add the mylarunder PCB bottom.
H的高度必须大于等于9mm,如果小于9mm,则必须在PCB底层加麦拉片绝缘.
Note2: The D should be less than 8mm .Mount the power supply unit to the screw fixing columnusing M3 screw. The maximum value of the tightening torque is 0.4N-M.
D的直径须小于8mm，将电源锁在螺丝柱上需使用M3的螺丝。最大扭力为0.4N-M。
Note3: The Power supply unitis usually designed without the case. Please take care about ESD at anytime.
因为本产品为无外壳之设计，故在任何时候均应注意静电防护。

CULTRAVIEW

All rights reserve, if there is discrepancy,please refer to the actual product

13. List of key components（关键器件清单）

序号	名称	位号	规格型号	品牌/供应商
1	主芯片	U7	S2T512	S2 TeK
2	晶振	X3	24MHZ-10PF-20PPM 49US-SMD ROSON	ROSON
			24MHZ-10PF-20PPM HC-49SMD TKD	TKD
		X2	27M-20PF-10PPM 49US-SMD ROSON	ROSON
			27M-20PF-10PPM HC-49SMD TKD	TKD
		X1	24.576M-12PF-10PPM HC-49S TKD	TKD
			24.576M-12PF-10PPM HC-49US ROSON	ROSON
3	高频头	U111	RDA5160	RDA
			R840	Rafael
			R842	Rafael
		U113	RDA5815M	RDA
			AV2012	北高智
4	Nand FLASH	U10	GD25Q64CSIGR	GD
			W25Q64FVSIG	WINBOND
5	功放	UA100	YD1517P	YD
			TDA1517	NXP

序号	关健件名称.	生产厂家（英文）	生产厂家（中文）	型号	规格	认证证书号（CCC/CQC/VDE/UL）
1	Y1 电容 PCY2,PCY4, PCY5	GUANGDONG SOUTH HONGMING ELECTRONIC SCIENCE & TECHNOLOGY CO LTD	广东南方宏明电子科技股份有限公司	F	PCY2,PCY5/680PFPCY4/1000PF; min 250Vac	VDE: 40036393 UL:E154899 CQC03001003160
		Hsuan Tai Electronics CO .,LTD	暄泰电子（苏州）有限公司	CY		VDE:40008912 UL: E199069 CQC12001084626
		Dongguan Easy-gather Electronic Co., Ltd.	东莞市易利嘉电子有限公司	DCF		VDE: 40022942 UL: E252221 CQC: 04001011968
		WALSIN TECHNOLOGY CORP	广州汇侨电子有限公司	AH		VDE: 40001804 UL: E146544 CQC: 11001055510

CULTRAVIEW

All rights reserve, if there is discrepancy,please refer to the actual product

		GCE (Dongguan) Electronics Co.,Ltd	东莞市莞创电子有限公司	G Y1		VDE: 40040844 UL: E464834 CQC: 14001115094
		DONGGUAN CITY DAFU ELECTRONICS CO LTD	东莞市达孚电子有限公司	CT7		VDE: 40041523 UL: E465278 CQC14001119741
2	X2 电容 PCX1	ULTRA TECH XIPHI ENTERPRISE CO.LTD	台湾昱电实业股份有限公司	HQX	0.47uF/min 275Vac	UL：E183780 VDE：40015608 CQC: 03001003067
		Hsuan Tai Electronics CO .,LTD	暄泰电子（苏州）有限公司	MCY		VDE:125205 UL: E199069 CQC: 12001084625
		Carli Electronics Co.LTD	东莞东坑坑美凯励电子厂	MPX		UL：E120045 VDE:40008520 CQC: 12001069506
		Dongguan Easy-gather Electronic Co., Ltd.	东莞市易利嘉电子有限公司	MKP-X2	0.47uF/min 275Vac	VDE: 40022258 UL: E252221 CQC: 07001021816
		SHENZHEN SHENFENG ELECTRONICS CO LTD	深圳市深峰电子有限公司	CBB62		VDE: 40031777 UL: E345591 CQC: 12001067220
		WINDAY ELECTRONIC INDUSTRIAL CO LTD	威迪电子(东莞)有限公司	MPX		VDE: 40030283 UL: E302125 CQC: 05001012269
		SHEN ZHEN JING YU ELECTRONICS CO , LTD	深圳京裕电子有限公司	CBBX2		VDE:40025597 UL:E230035 CQC:070010188 14
3	保险丝 PF1	DONGGUAN BETTER ELECTRONIC TECHNOLOGY CO LTD	东莞贝特电子科技股份有限公司	932	3.15A/250V	VDE:40033369 UL:E300003 CQC: 11012062690

CULTRAVIEW

All rights reserve, if there is discrepancy,please refer to the actual product

		Shenzhen Lanson Electronics CO.,LTD	深圳市良胜电子有限公司	SMT		UL: E221465 VDE:40012592 CQC: 05012014400
		EVER ISLAND ELECTRIC CO LTD & WALTER ELECTRIC	东莞华德电器有限公司	2010		UL：E220181 VDE：40018781 CCC2004010207123786
		XC Electronics (Shenzhen) Co., Ltd.	旭程电子(深圳)有限公司	5TE		UL:E249609 VDE:40029550 CQC:090120330449
		LITTELFUSE WICKMANN WERKE	LITTELFUSE WICKMANN WERKE	392		UL:E67006 VDE:126983 CQC:070120211622
4	光藕 PU5	LITE-ON TECHNOLOGY CORP	光宝电子有限公司	LTV-817	Di ≥0.4mm, Ex ≥8.0mm	UL：E113898 VDE：40015248 CQC:100010544220
		EVERLIGHT ELECTRONICS CO LTD	亿光电子工业股份有限公司	EL817	Di ≥0.4mm, Ex ≥8.0mm	UL:E214129 VDE:132249 CQC:080010227622
		COSMO ELECTRONICS CORP	冠西电子企业股份有限公司	K1010	Di≥0.4mm, Ex >7.0mm	UL:E169586 VDE:101347 CQC:100010495555
5	PCB板材	Kingboard Electronic Raw Material (JiangYin)LTD	建滔电子材料(江阴)有限公司	KB-6160	Min Thickness: 1.2mm V-0 级	UL:E123995 CQC: 09001031617
		SHANTOU FENGLIDA ELECTRONICS TECHNOLOGY CO LTD	汕头丰利达电子科技有限公司	KB-6160		CQC:131341006673
		TREASURE ELECTRONIC TECHNOLOGY (SHENZHEN) LTD	卓穗电子科技(深圳)有限公司	KB-6160		CQC:080010229449
		GUANG DONG HUI ZHOU DAYA BAY MILLION SOURCESP.C.B CO.,LTD.	惠州市大亚湾科翔科技电路板有限公司	KB-6160		CQC:100010498112

CULTRAVIEW

5-1	PCB成品	MILLION SOURCES CO LTD HK	惠州市大亚湾科翔科技电路板有限公司	MS-1 (KB-6160)	Min Thickness: 1.2mm	E198407
		EXPRESS ELECTRONICS LTD	扬宣电子（清远）有限公司	10V0 (KB-6160)		E157925
		SHENZHEN VICTORY ELECTRTONIC TECHNOLOGY CO LTD	深圳万基隆电子科技有限公司	F-D		UL:E254215 CQC:060010165007
		LONGNAN CHAMPION ASIA ELECTRONIC TECHNOLOGY CO., LTD.	龙南骏亚电子科技有限公司	F-D		UL:E254215 CQC：15001125105
		RONG HUI ELECTRONICS (HUIZHOU) CO LTD	荣晖电子（惠州）有限公司	RH-3		UL:E252098 CQC: 08001027825
		SHANTOU FENGLIDA ELECTRONICS TECHNOLOGY CO LTD	汕头丰利达电子科技有限公司	FLD-02 (KB-6160)		UL:E347210
		TREASURE ELECTRONIC TECHNOLOGY (SHENZHEN) LTD	卓穗电子科技（深圳）有限公司	T-D (KB-6160)		UL:E254667
6	热敏电阻 PTH1	NANJING SHIHENG ELECTRONICS CO LTD	南京时恒电子科技有限公司	MF72-3D11	3ohm, Min 3A	UL:E241319 CQC：04001010556
		THINKING ELECTRONIC INDUSTRIAL CO LTD	兴勤电子工业股份有限公司	SCK-037		UL：E138827 CQC：05001011985
		THINKING ELECTRONIC INDUSTRIAL CO LTD	兴勤电子工业股份有限公司	SCK-035		UL：E138827 CQC：05001011993
7	插座 PCON1	ZHEJIANGJINDA ELECTRIC	浙江津达有限公司	3.96T-02	250V, min 7A,V-0, 85	UL: E237523

CULTRAVIEW

		CO.,LTD			degree C	
		LAND WIN ELECTRONIC CORP	新扬麟电子（深圳）有限公司	3961 P		UL: E159426
		ZheJiang zhuoLi Electronic Co,Ltd	浙江卓立电子有限公司	ZL3963-A		UL:E239965
8	Transformer （PT1）	SHENZHEN XIEXING ELECTRONICS CO.,LTD	深圳市协兴电子有限公司	BYQ-250		
	BOBBIN	CHANG CHUN PLASTICS CO.,LTD.	长春人造树脂股份有限公司	T375J T200HF	150℃	E59481
	WIRE	SHANTOU SHENGANG ELECTRICAL INDUSTRIAL CO.,LT	汕头深港电子材料有限公司	2UEW/130	130℃	E239508
		ZHEJIANG HONGBO TECHNOLOGY CO.,LTD.	浙江洪波科技股份有限公司	2UEW/155	155℃	E221719
	TAPE	JINGJIANG JINGYI ADHESIVE PRODUCT CO.,LTD	靖江市精益胶粘制品有限公司	JY25-A(b)	130℃	E246950
	VARNISH	ZHUHAI CHANGXIAN NEW MATERIALS TECHNOLOGY CO LTD	珠海长先化学科技有限公司	E962	130℃	E335405
		YUEYANG GREEN TECHNOLOGY CO LTD	岳阳市格瑞科技有限公司	JX-1150(a)	150℃	E303754
	TUBE	DONGGUAN LING FREE HARDWARE PLASTICS PRODUCT CO LTD	东莞市领飞五金塑胶制品有限公司	LING FREE PTFE TUBE	200℃	E352366
	Multi-layer Insulated Winding Wire	SHENZHEN DARUN SCIENCE AND TECHNOLOGY CO.,LTD	深圳市大润科技有限公司	DRTIW-B	130℃	E335841
		GREAT LEOFLON INDUSTRIAL CO.,LTD	蓝菱实业有限公司	TRW(B)	130℃	E211989

CULTRAVIEW

9	Inductance PLF3	ShenZhen Cultraview Digital Technology CO.,LTD	深圳市金锐显数码科技有限公司	DG-198		
	Wire	DONG GUAN YIDA INDUSTRIAL CO LTD	东莞益达实业有限公司	UEW	130℃	E344055
10	Bleeder Resistor PR1,PR2, PR3,PR4	--	国巨电子(东莞)有限公司	--	1.5M ohm, 1/4W	--
		--	旺诠电子有限公司	--	1.5M ohm, 1/4W	--
		--	三星电机有限公司	--	1.5Mohm, 1/4W	--
		--	华新科技股份有限公司	--	1.5Mohm, 1/4W	--
11	Mylar Sheet	CHENGDU KANGLONGXIN PLASTICS CO.,LTD	成都康隆鑫塑业有限责任公司	KLX FRPC-870B	Min 0.4mm	E315185
		MIANYANG LONGHUA FILM CO LTD	绵阳龙华薄膜有限公司	PC-770		E254551
		SABIC JAPAN L L C	SABIC JAPAN L L C	FR500		E207780
		SICHUAN DONGFANG INSULATING MATERIAL CO LTD	SICHUAN DONGFANG INSULATING MATERIAL CO LTD	DFR3738A (d)		E199019

CULTRAVIEW

All rights reserve, if there is discrepancy,please refer to the actual product

+5V_Standby POWER 3A

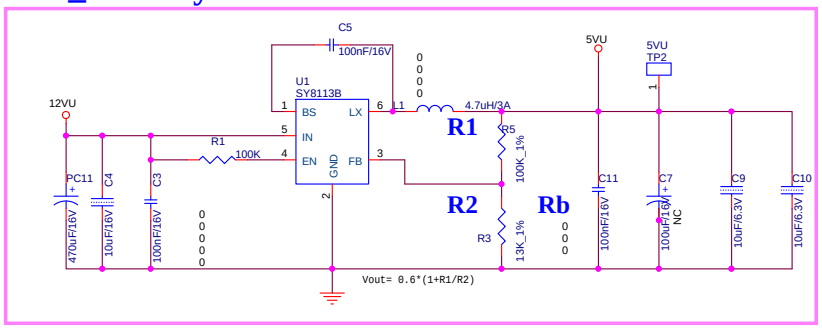

5V &12V Switch Power

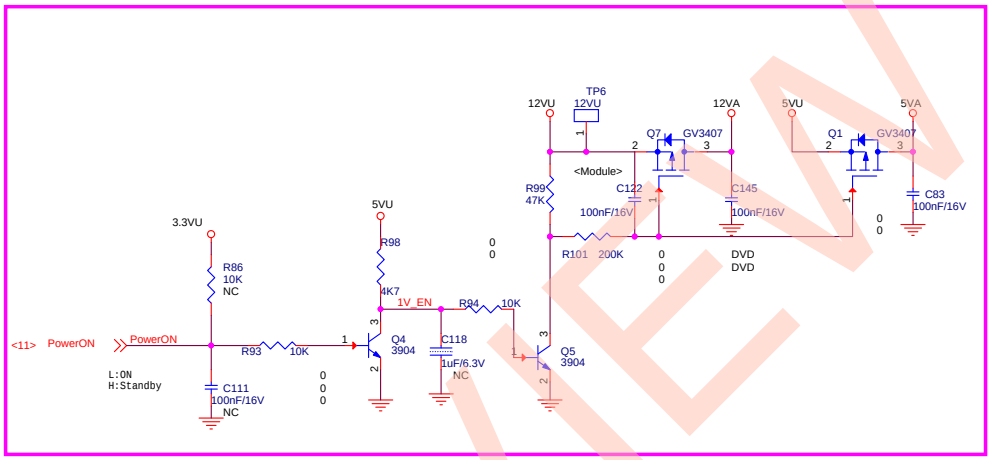

1V System Power 2A

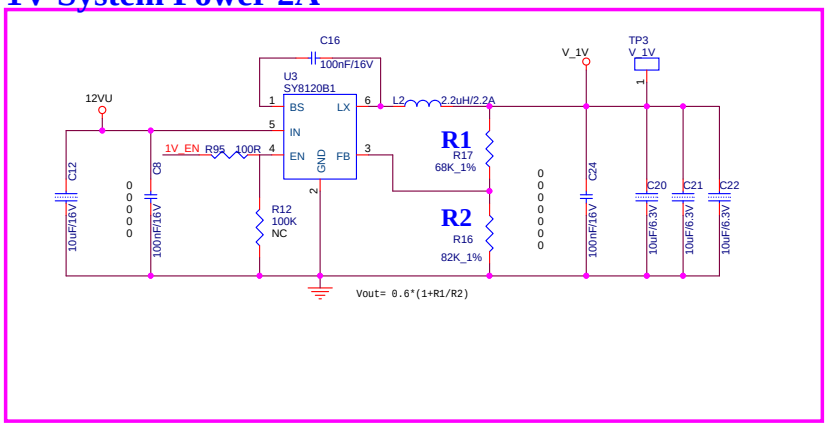

3.3V System Power

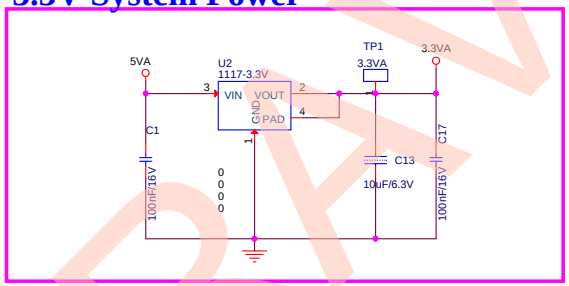

+3.3V STANDBY POWER

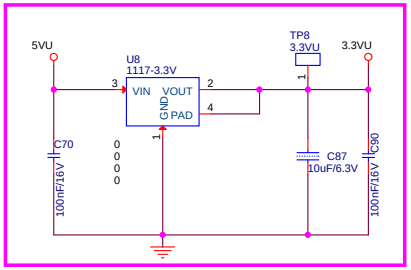

1.5V DDR Power

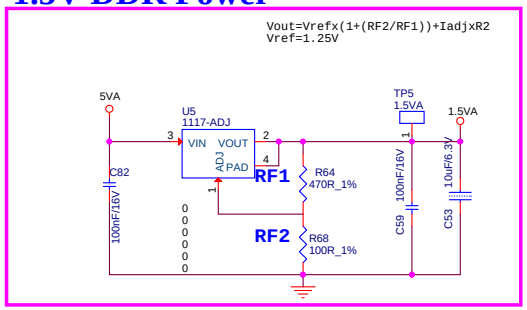

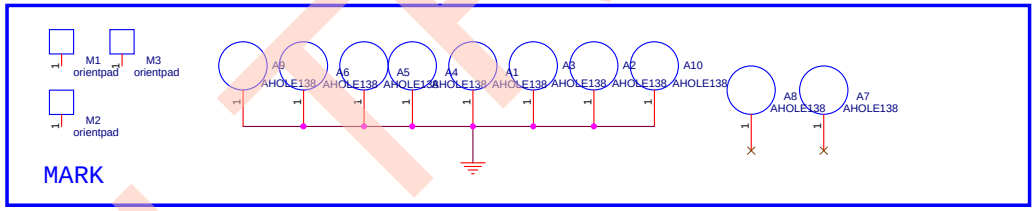

CULTRAVIEW

锐显数码 CULTRAVIEW	Title: CV512L-Q24	
Size: Custom	Document Number: Power Supply	Rev: 11
Date: Wednesday, March 30, 2016	Sheet 3 of 16	

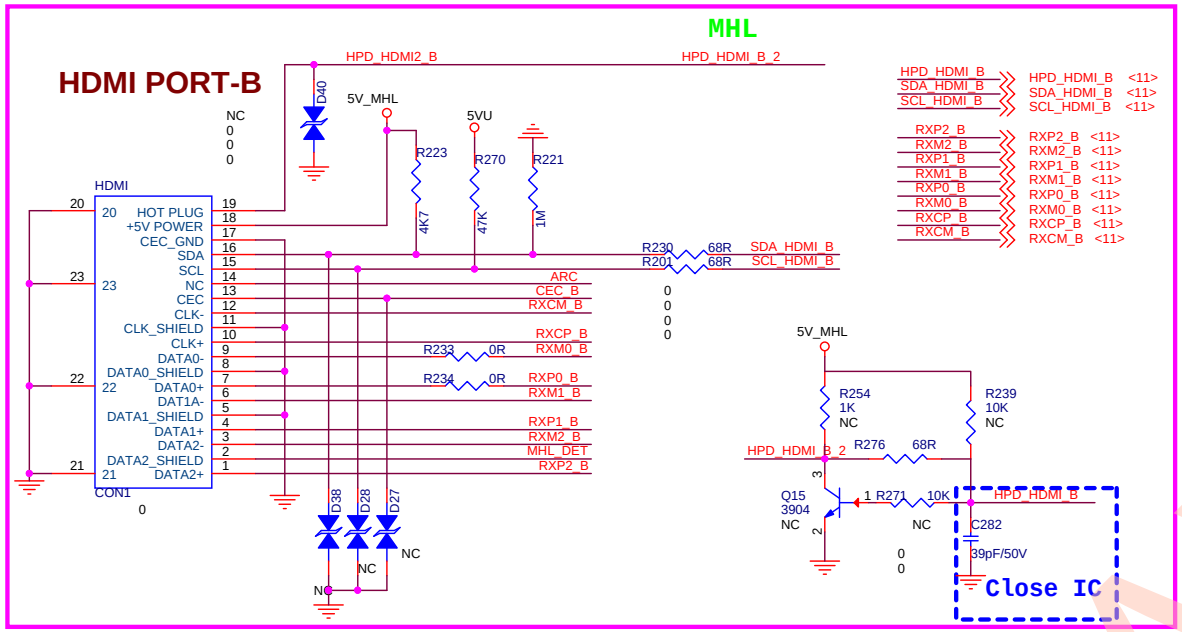

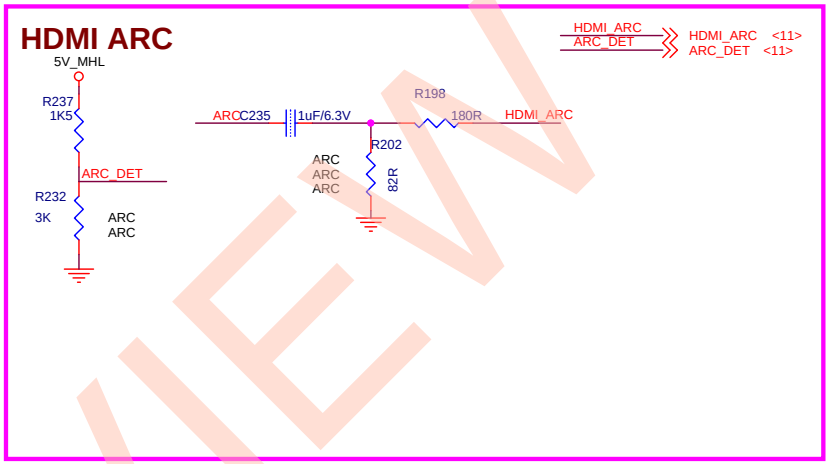

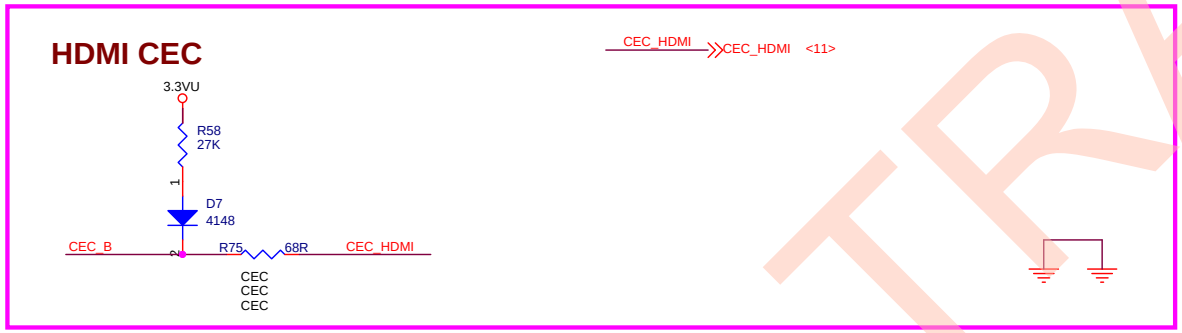

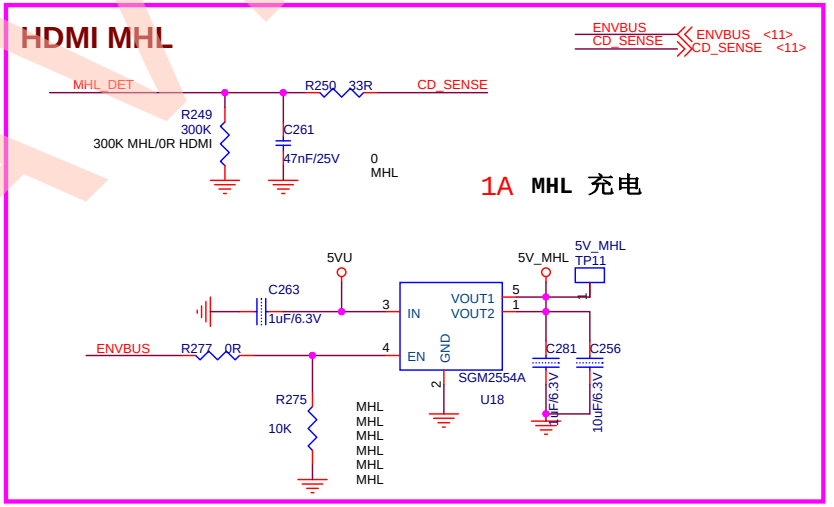

CULTRAVIEW

锐显数码 CULTRAVIEW	Title: CV512L-Q24	
Size: B	Document Number: HDMI	Rev: 11
Date: Wednesday, March 30, 2016	Sheet 4 of 16	

PC Analog Input

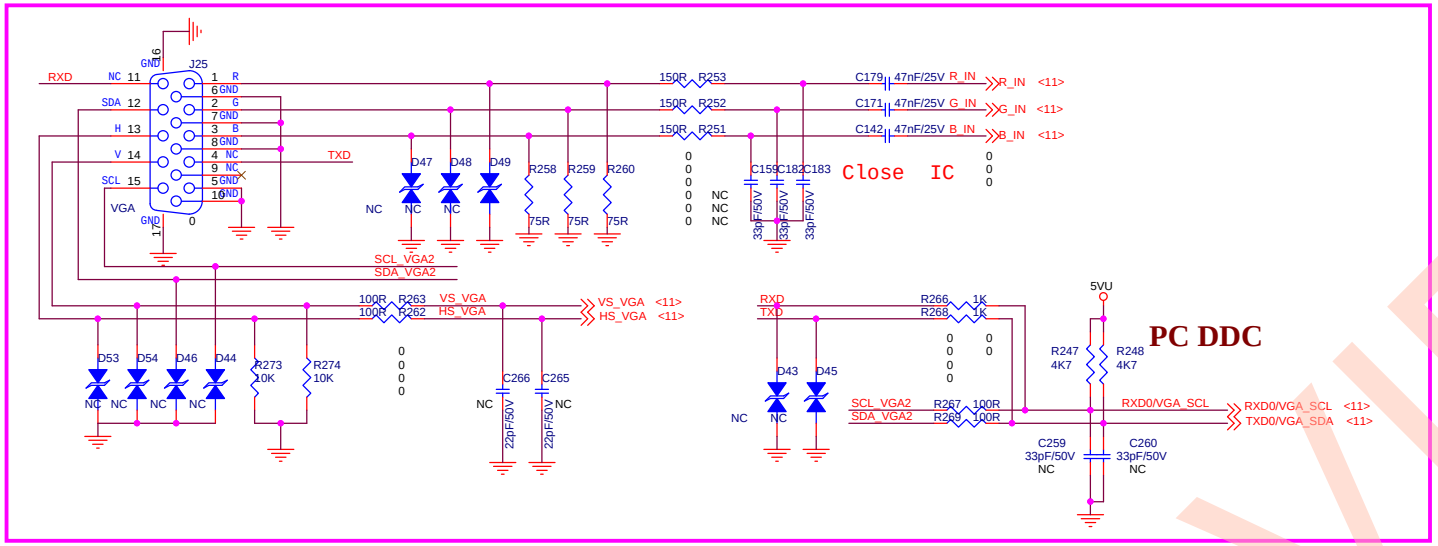

PC Audio Input

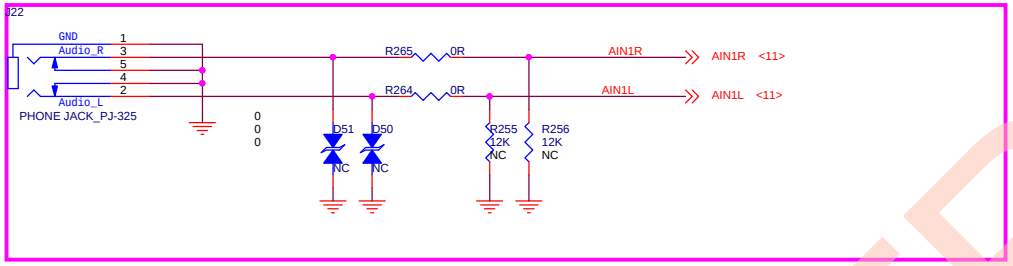

Dual USB Input

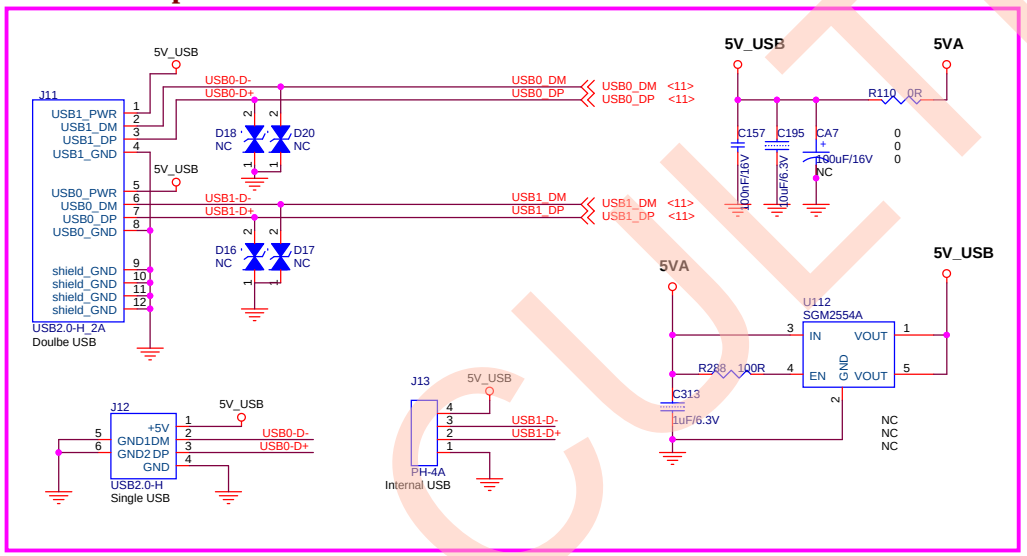

CULTRAVIEW

锐显数码 CULTRAVIEW	Title: CV512L-Q24	
Size: Custom	Document Number: PC & USB	Rev: 11
Date: Wednesday, March 30, 2016	Sheet 5 of 16	

YPbPr Input

Close IC

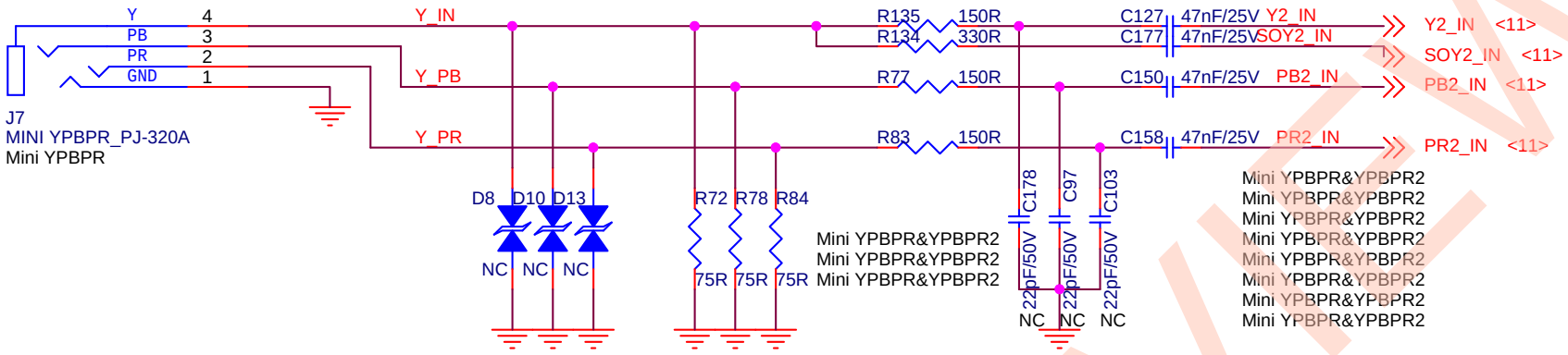

MINI AV Input

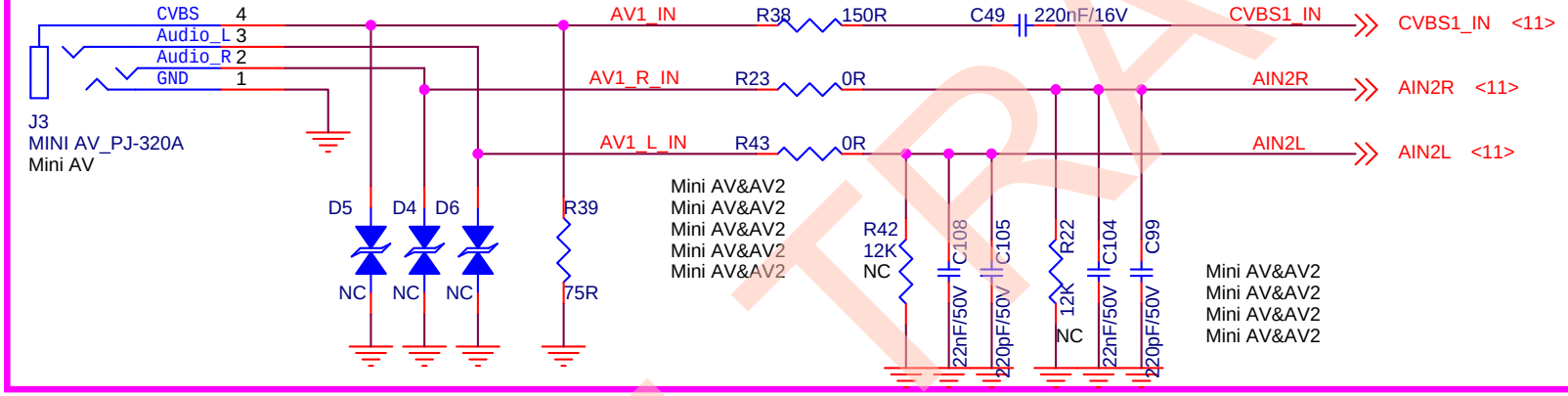

YPBPR2

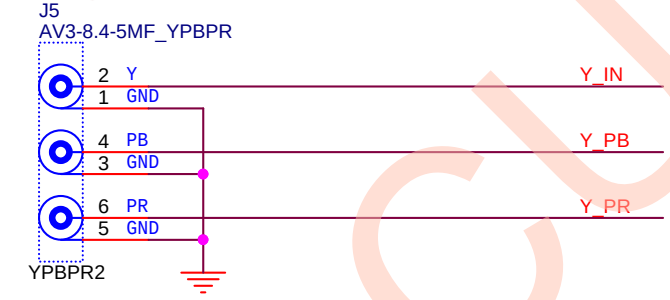

CULTRAVIEW

锐显数码 CULTRAVIEW	Title: CV512L-Q24	
Size: A	Document Number: YPbPr & AV	Rev: 11
Date: Wednesday, March 30, 2016	Sheet 6 of 16	

SCART1 Input

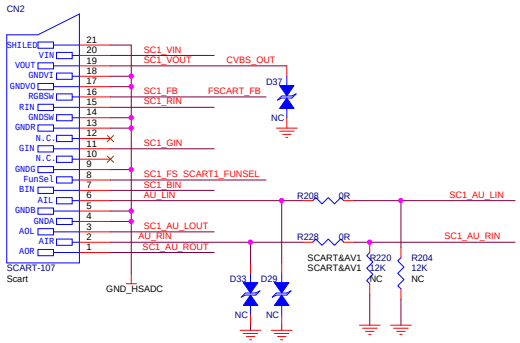

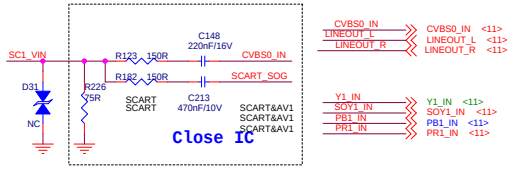

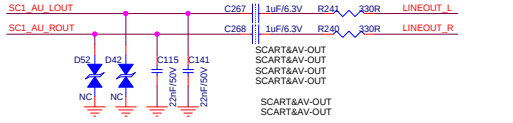

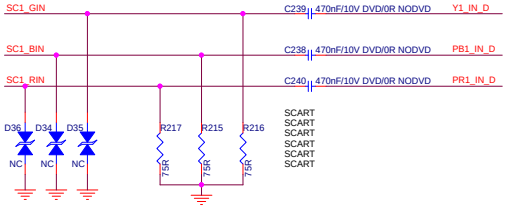

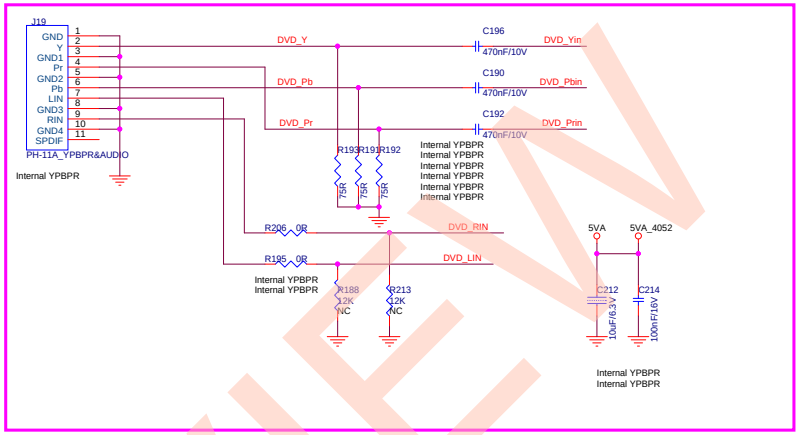

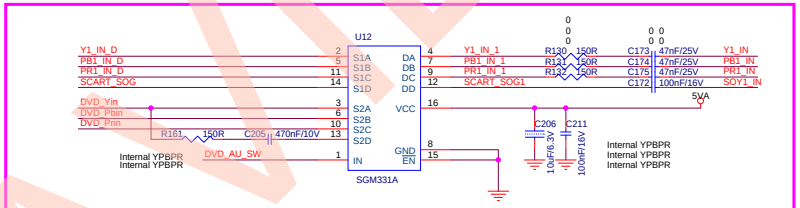

CVBS Output

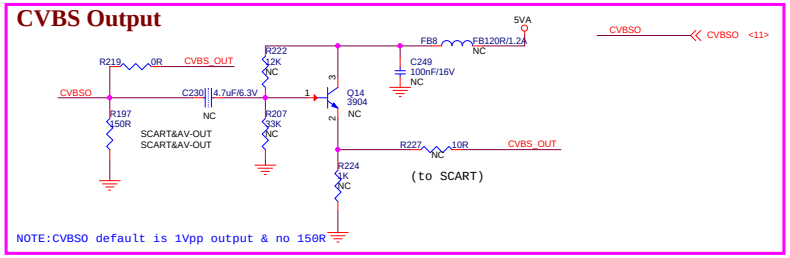

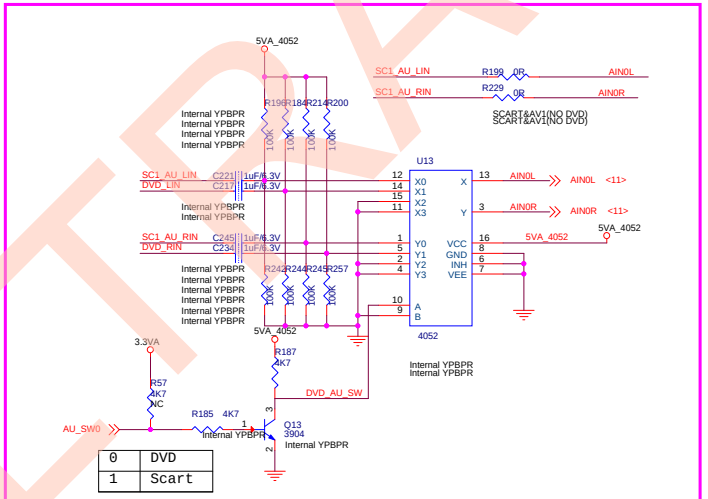

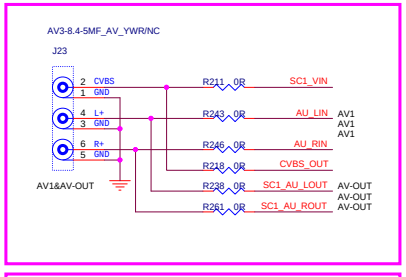

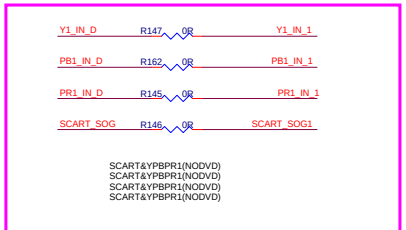

Scart Function switch

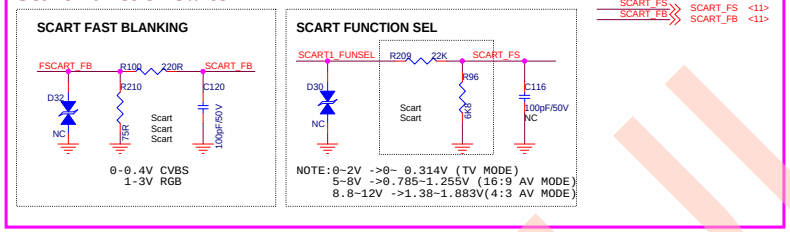

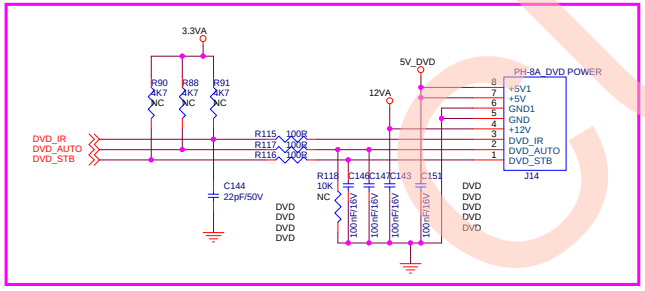

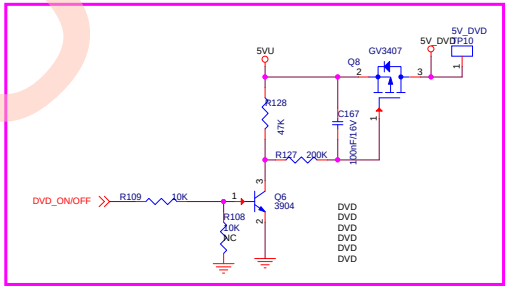

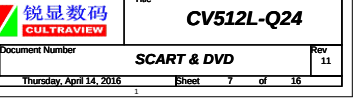

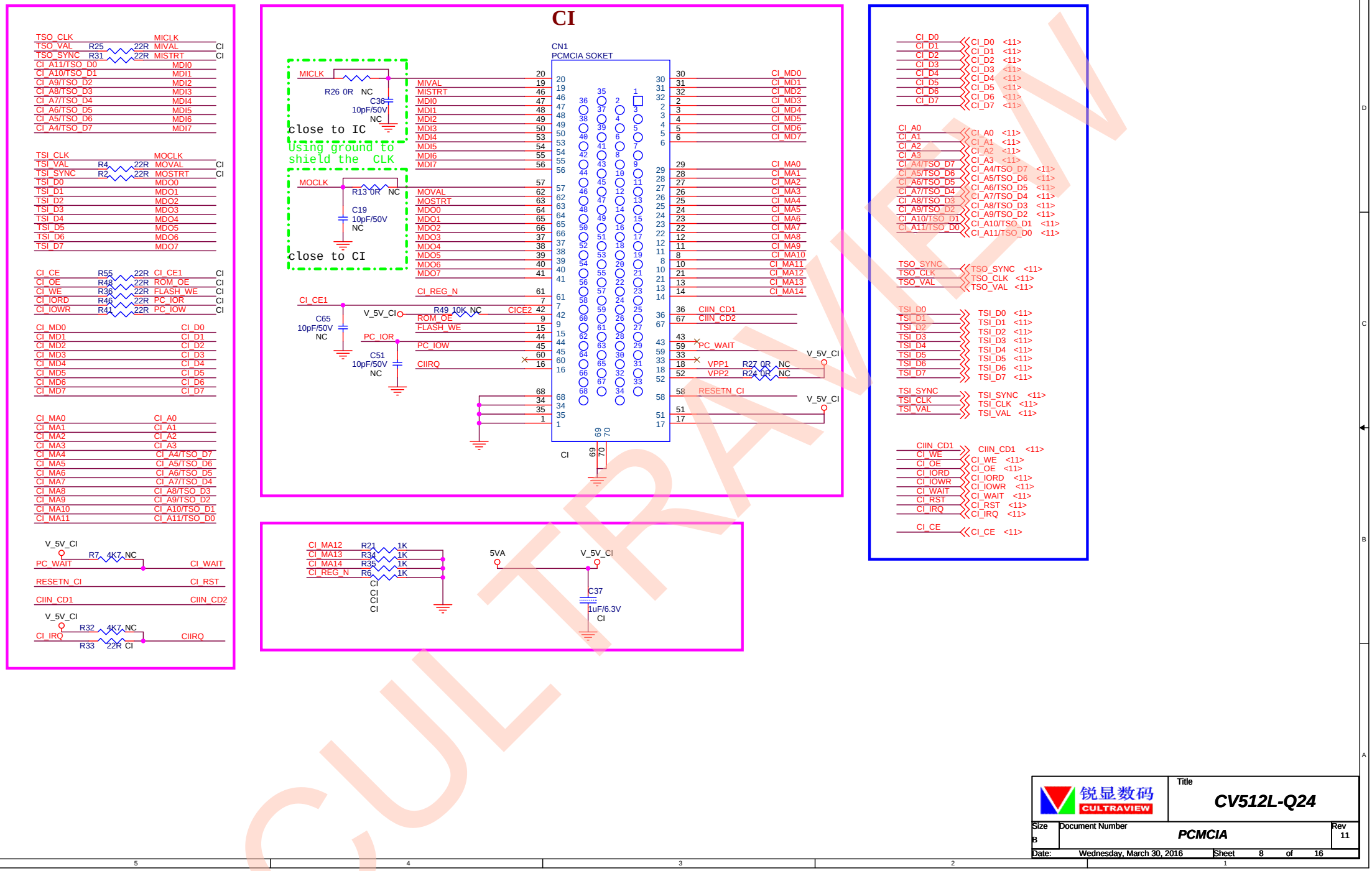

CULTRAVIEW

锐显数码 CULTRAVIEW	Title	CV512L-Q24	
Size B	Document Number	PCMCIA	Rev 11
Date: Wednesday, March 30, 2016	Sheet 8 of 16		

KEYPAD & IR

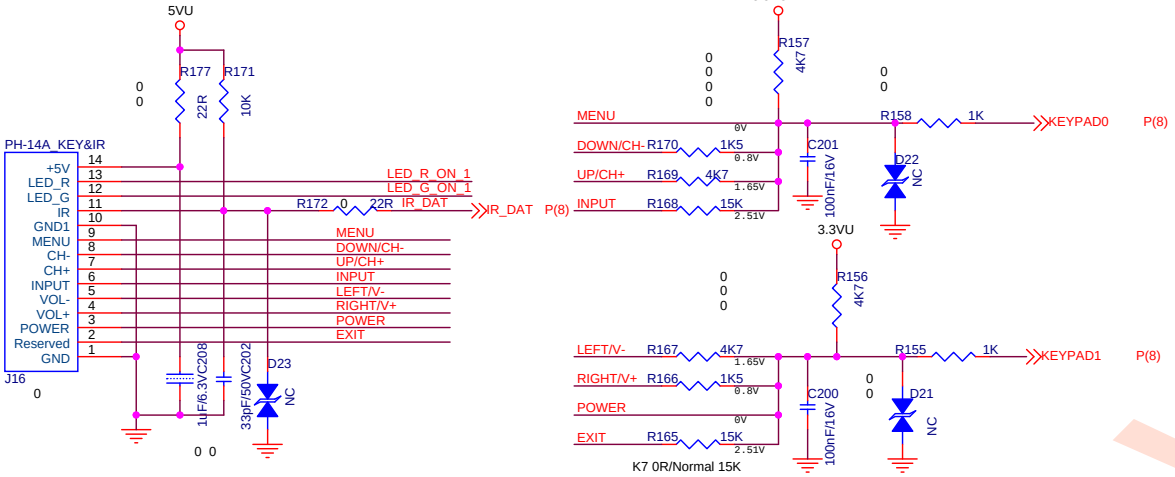

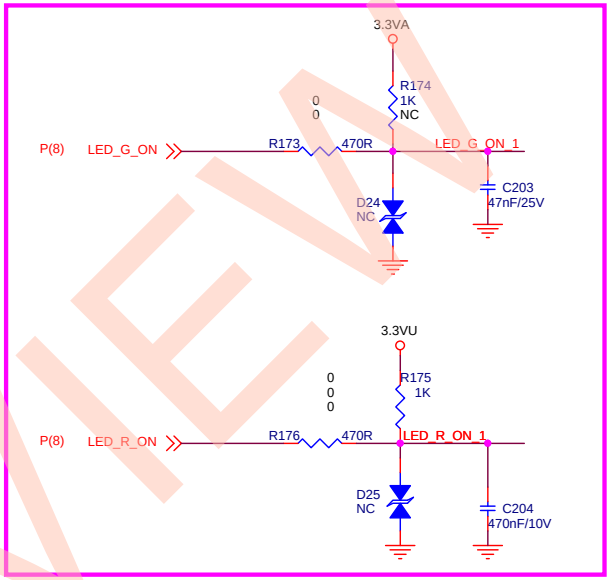

SPDIF OUT

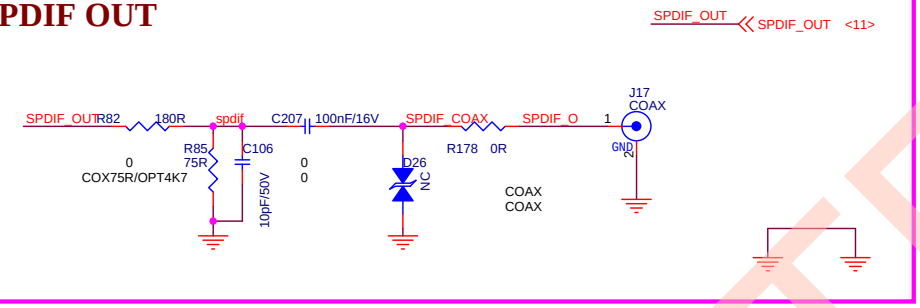

SPI Flash

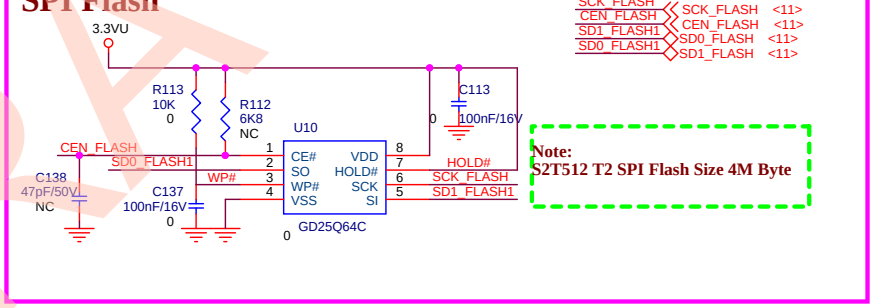

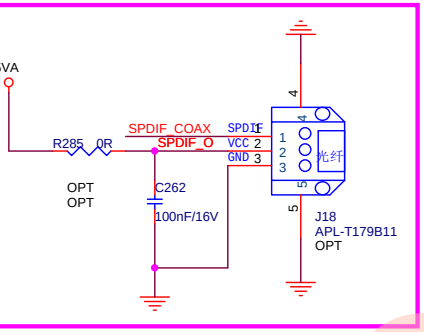

CULTRAVIEW

锐显数码 CULTRAVIEW	Title: CV512L-Q24	
Size: B	Document Number: KEYPAD & IR & FLASH	Rev: 11
Date: Wednesday, March 30, 2016	Sheet 9 of 16	

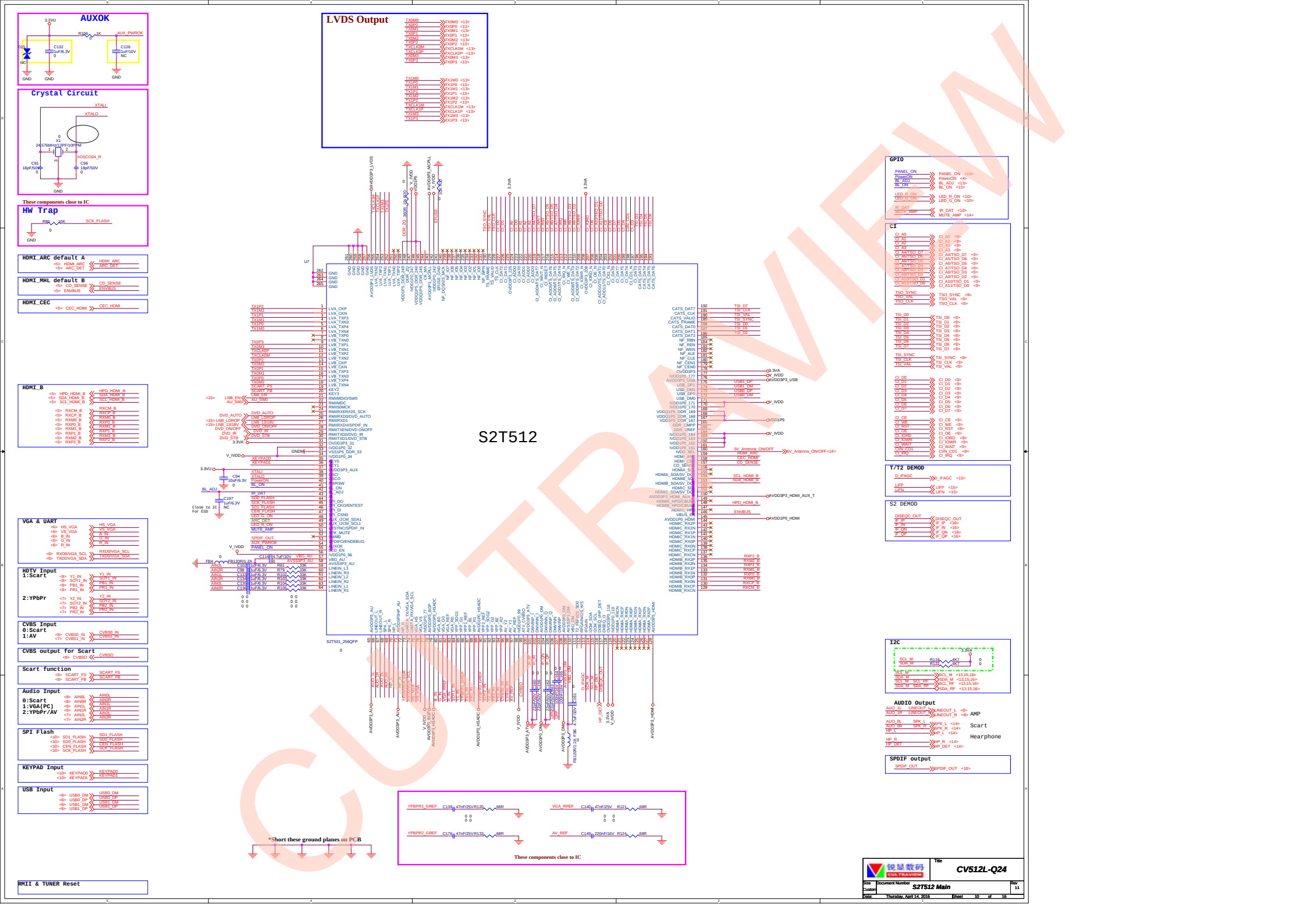
AUXOK
Crystal Circuit
HW Trap
HDMI_ARC default A
HDMI_MHL default B
HDMI_CEC
HDMI_B
VGA & UART
HDTV Input
1:Scart
2:YPbPr
CVBS Input
0:Scart
1:AV
CVBS output for Scart
Scart function
Audio Input
0:Scart
1:VGA(PC)
2:YPbPr/AV
SPI Flash
KEYPAD Input
USB Input
RMII & TUNER Reset
These components close to IC
LVDS Output
S2T512
S2T531_256QFP
GPIO
CI
T/T2 DEMOD
S2 DEMOD
I2C
AUDIO Output
SPDIF output
*Short these ground planes on PCB
These components close to IC
CV512L-Q24
S2T512 Main
Thursday, April 14, 2016

ADC POWER/GND (1.0V/3.3V)

FB for ADC need Rdc<0.015 , Z=120/100MHz Idc>3A
Default part MHC3216S121W

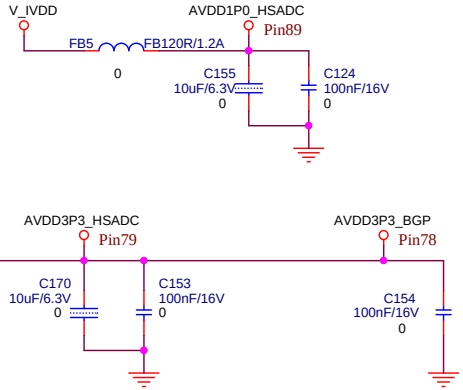

HDMI POWER/GND (1.0V/3.3V)

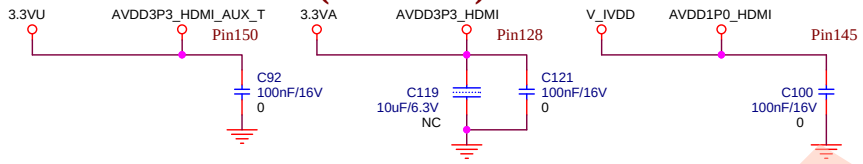

PLL POWER/GND (3.3V)

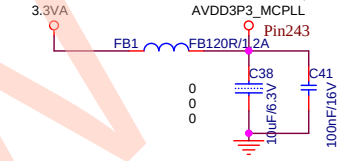

IVDD POWER (1.0V)

FB for CVDD need Rdc<0.015 , Z=120/100MHz Idc>3A
Default part MHC3216S121W

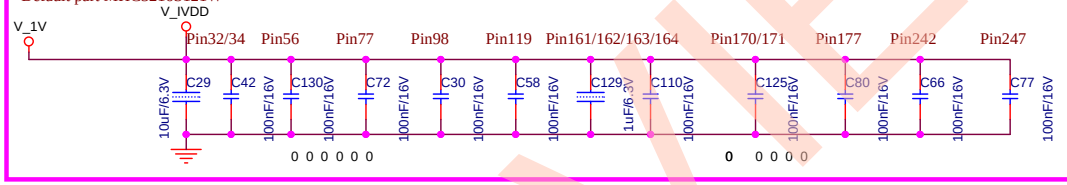

AUDIO POWER/GND (3.3V)

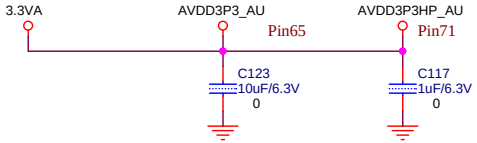

DDR POWER (1.5V)

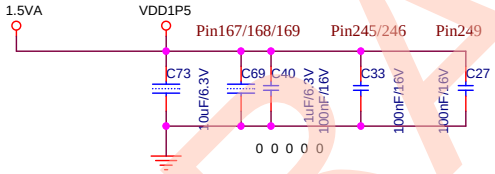

DEMOD POWER/GND (3.3V/1.0V)

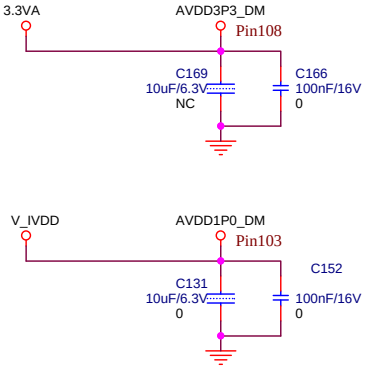

3.3V

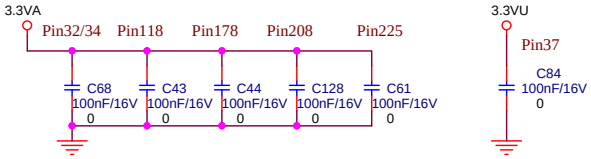

LVDS POWER/GND (3.3V)

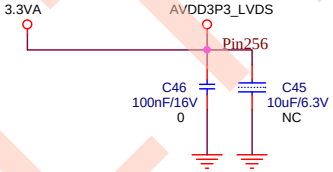

USB POWER/GND (3.3V)

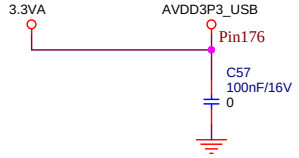

ATV POWER/GND (3.3V)

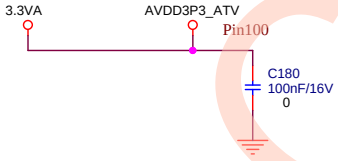

ALL FB except ADC, CVDD : need Rdc<0.2 , Z=300/100MHz , Idc>500mA
Default part : MCB2012S301H

***Short these ground planes on PCB**

锐显数码 CULTRAVIEW	Title: CV512L-Q24	
Size: Custom	Document Number: Main IC Power	Rev: 11
Date: Wednesday, March 30, 2016	Sheet 11 of 16	

CULTRAVIEW

Panel Interface

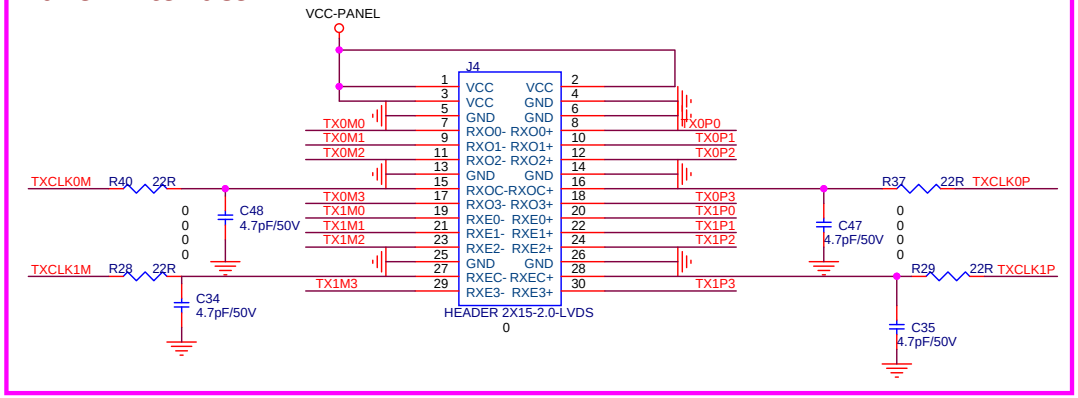

Panel Power Control

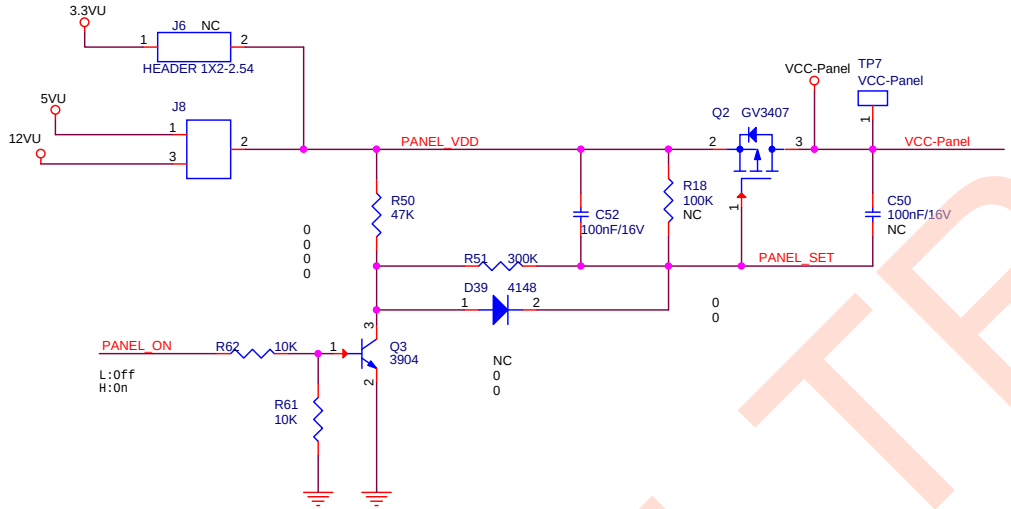

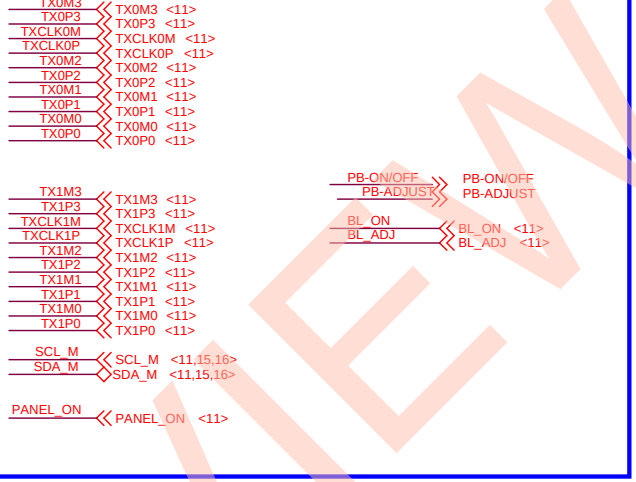

Inverter Interface

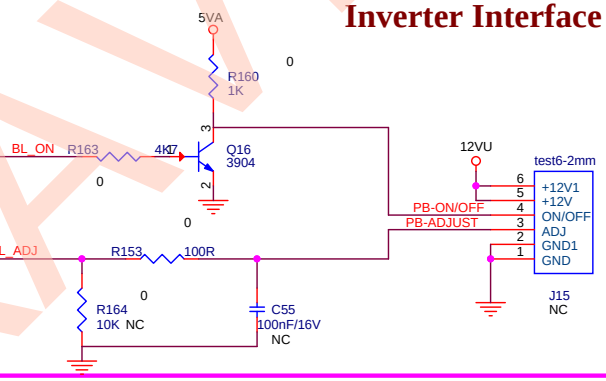

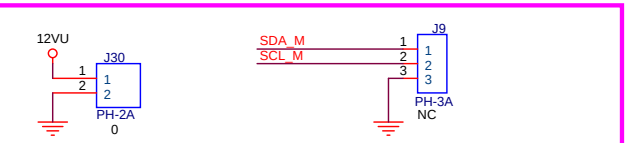

CULTRAVIEW

锐显数码 CULTRAVIEW	Title: CV512L-Q24	
Size: B	Document Number: Panel out	Rev: 11
Date: Wednesday, March 30, 2016	Sheet 12 of 16	

AMP

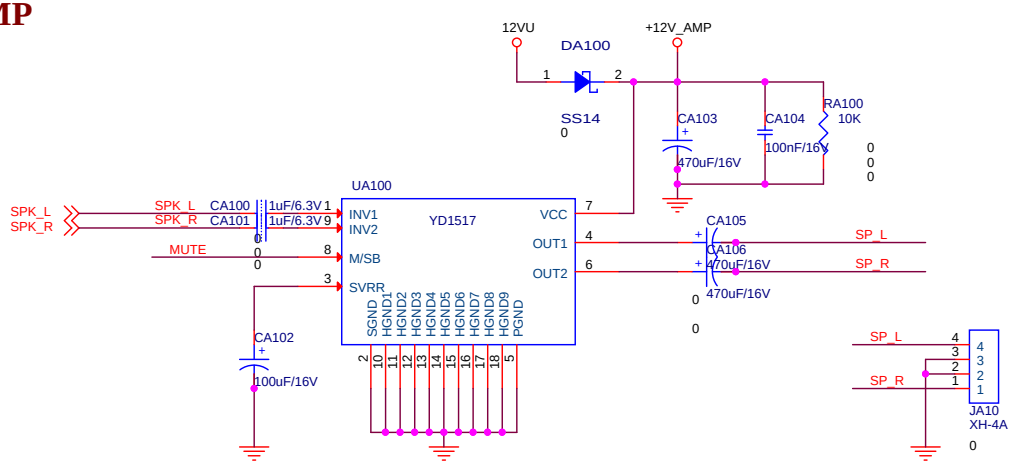

MUTE Control

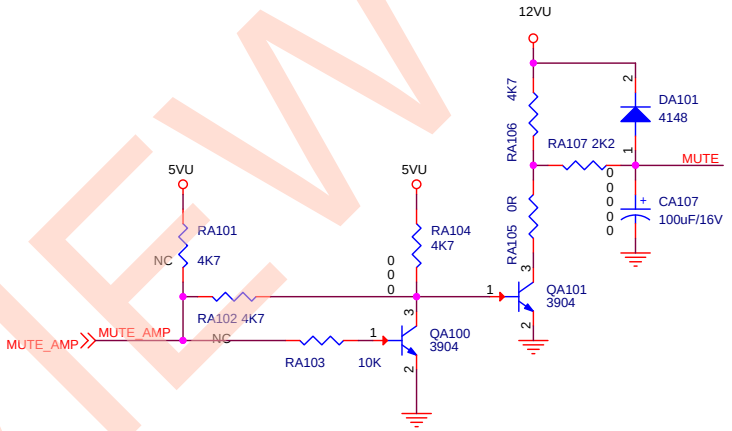

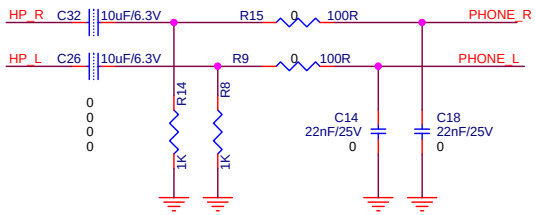

PHONE OUT

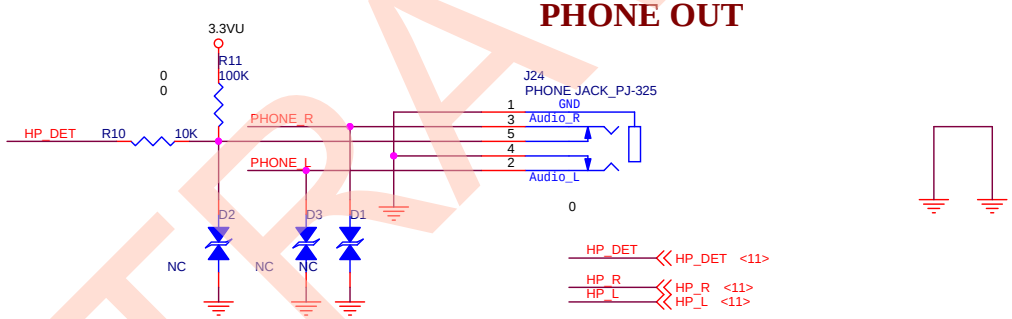

CULTRAVIEW

锐显数码 CULTRAVIEW	Title: CV512L-Q24		
Size: B	Document Number: Amplifier		Rev: 11
Date: Wednesday, March 30, 2016	Sheet 13 of 16		

T2 SILICON TUNER

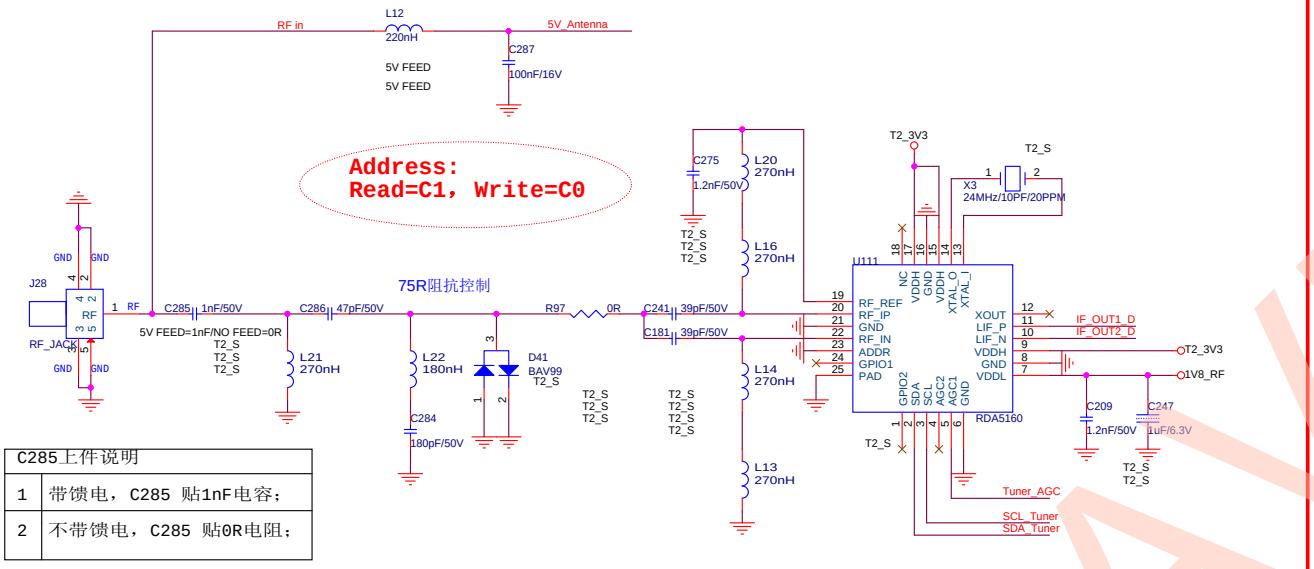

C285上件说明	
1	带馈电，C285 贴1nF电容；
2	不带馈电，C285 贴0R电阻；

IF Interface Filter

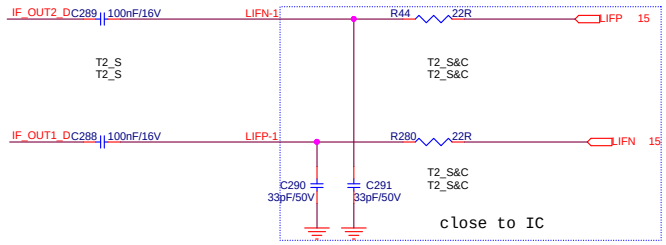

I2C Interface Filter

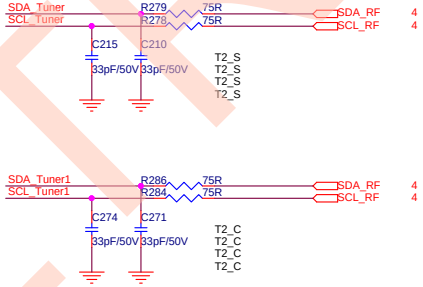

DTV IF AGC

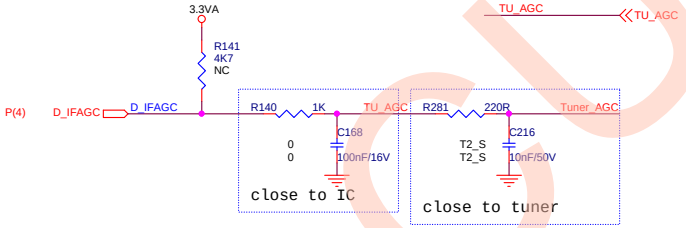

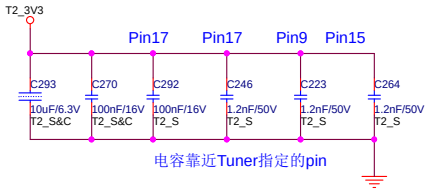

+5V Feed Supply

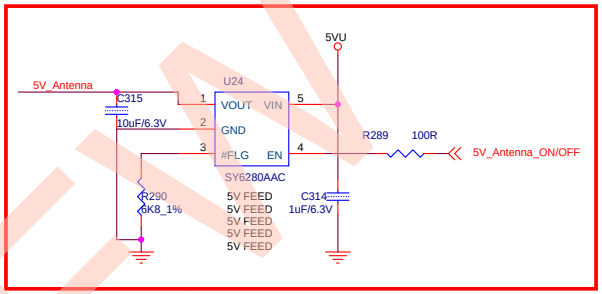

+3.3V SI-TUNER POWER

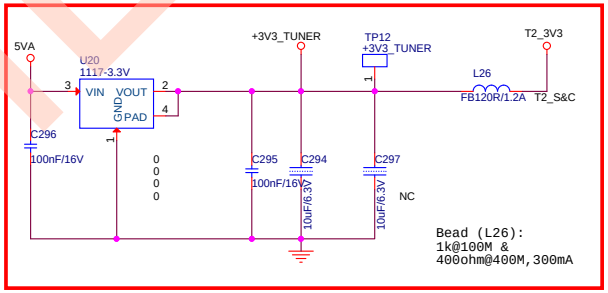

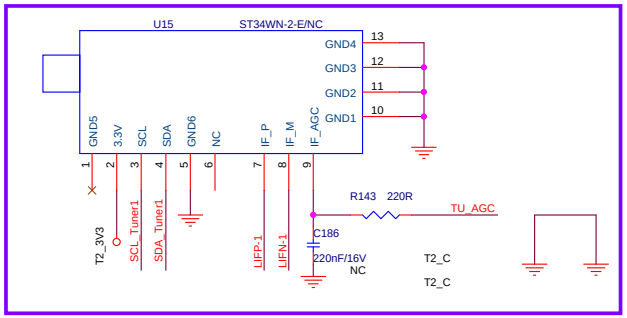

锐显数码 CULTRAVIEW	Title	CV512L-Q24	
Size: Custom	Document Number	T2+T+C Tuner_RDA5160	Rev: 11
Date: Thursday, April 14, 2016	Sheet	14 of 16	

ULTRAVIEW

S2 SILICON TUNER

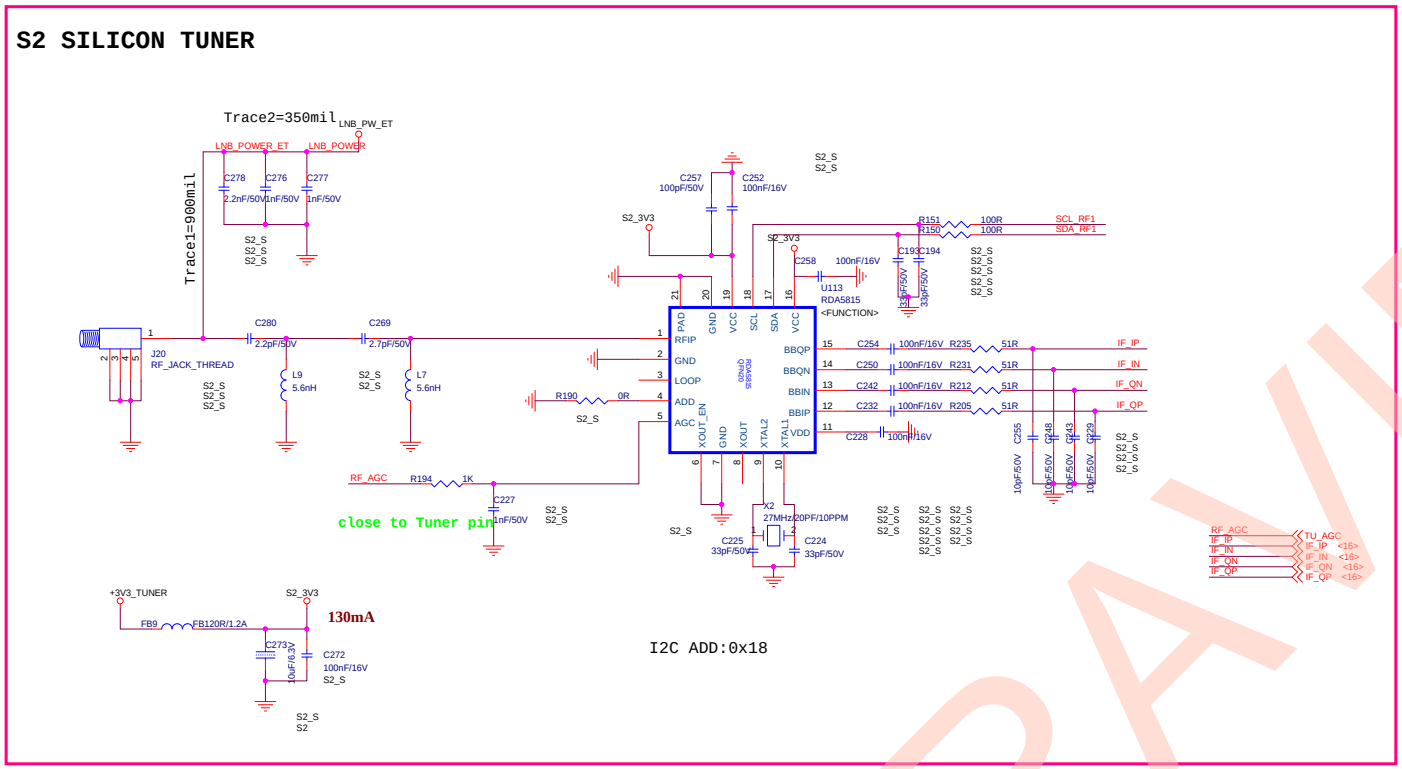

S2 CAN TUNER

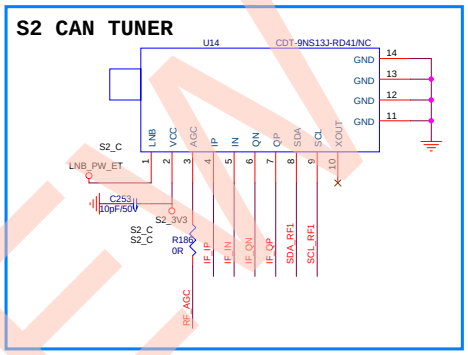

LNB_POER_CONTROL

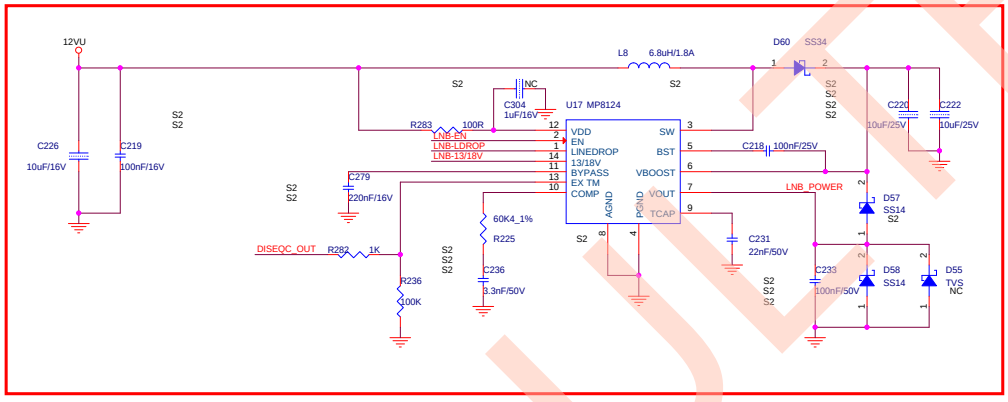

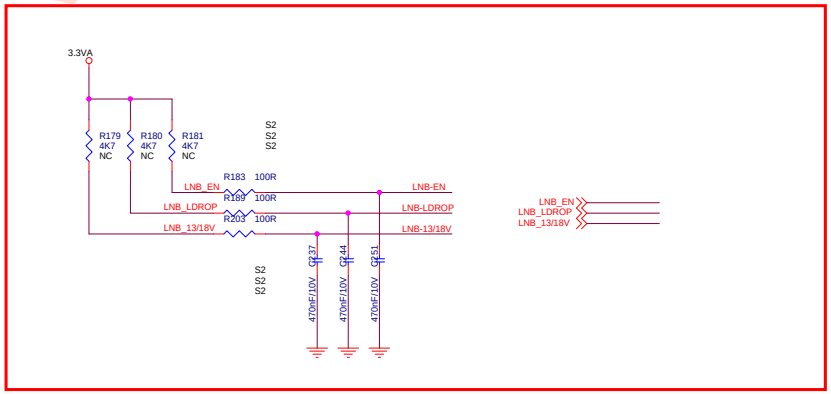

CULTRAVIEW

锐显数码 CULTRAVIEW	Title	CV512L-Q24
Size C	Document Number	S2 TUNER
	Rev	11
Date: Wednesday, March 30, 2016	Sheet 15 of 16	

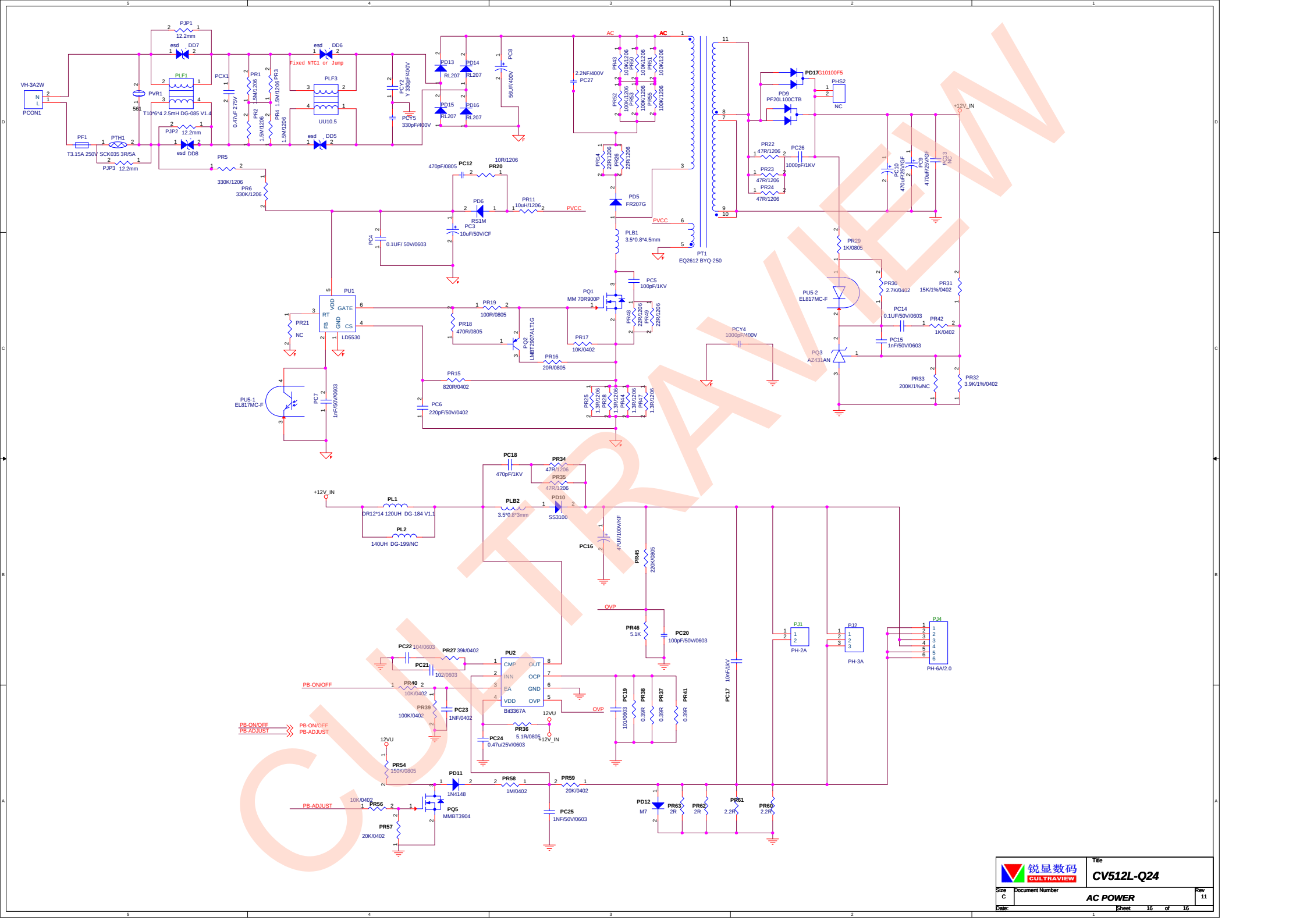

CULTRAVIEW

锐显数码 CULTRAVIEW	Title: CV512L-Q24	
Size: C	Document Number: AC POWER	Rev: 11
Date:	Sheet 16 of 16	

CV512L-Q24
Common problems solution

—Power Unit Problem Solving
—Display Unit Problem Solving
—Audio Unit Problem Solving
—Functional Unit Problem Solving

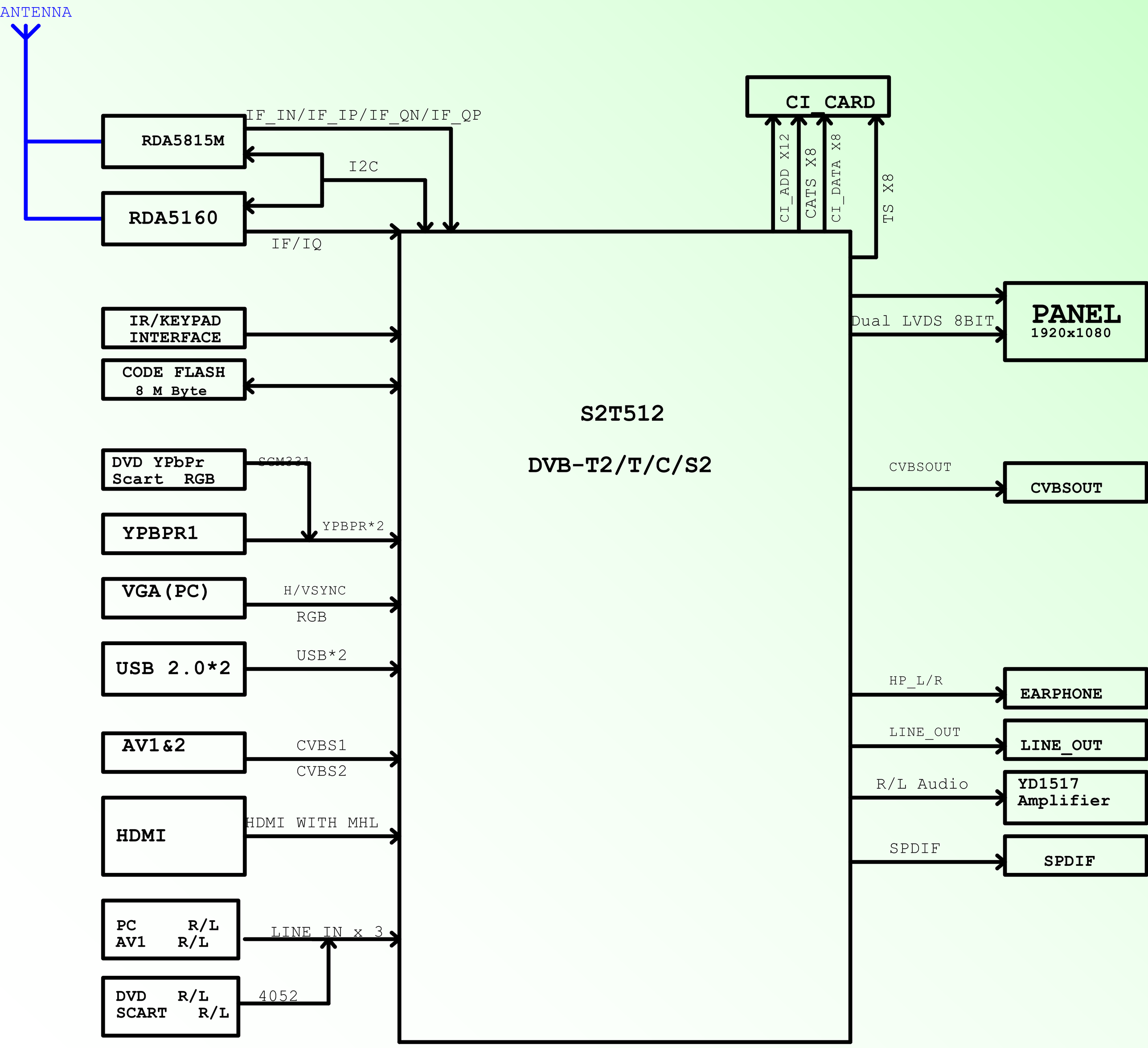
ANTENNA
RDA5815M
RDA5160
IF_IN/IF_IP/IF_QN/IF_QP
I2C
IF/IQ
CI CARD
CI_ADD X12
CATS X8
CI_DATA X8
TS X8
IR/KEYPAD INTERFACE
CODE FLASH
8 M Byte
S2T512
DVB-T2/T/C/S2
Dual LVDS 8BIT
PANEL
1920x1080
DVD YPbPr
Scart RGB
SCM331
YPBPR1
YPBPR*2
CVBSOUT
CVBSOUT
VGA(PC)
H/VSYNC
RGB
USB 2.0*2
USB*2
HP_L/R
EARPHONE
LINE_OUT
LINE_OUT
AV1&2
CVBS1
CVBS2
R/L Audio
YD1517
Amplifier
HDMI
HDMI WITH MHL
SPDIF
SPDIF
PC R/L
AV1 R/L
LINE IN x 3
DVD R/L
SCART R/L
4052

Picture 1: Power Units Problem Solving (Mainboard can not boot)

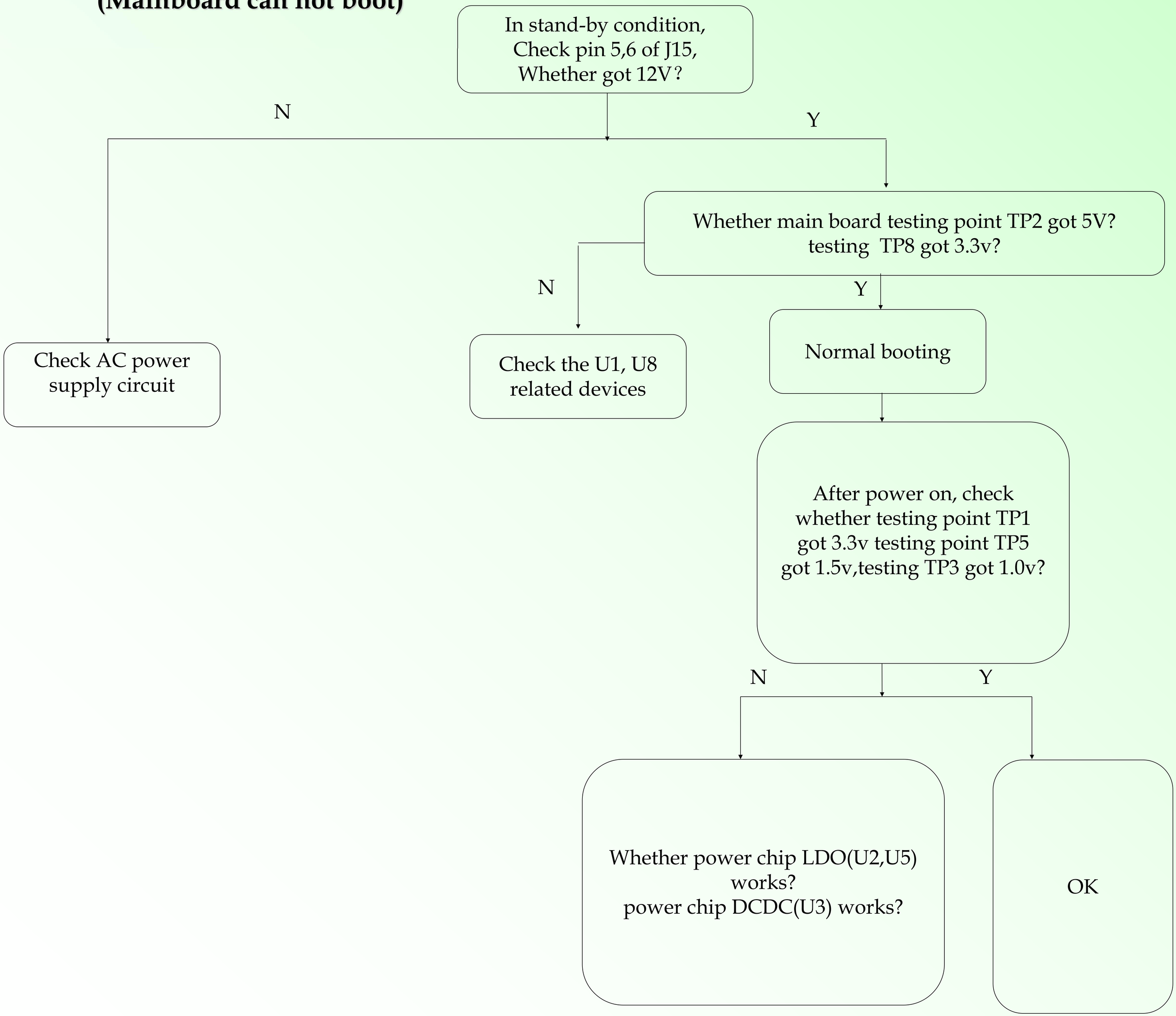

Picture 2

Display unit (black screen)

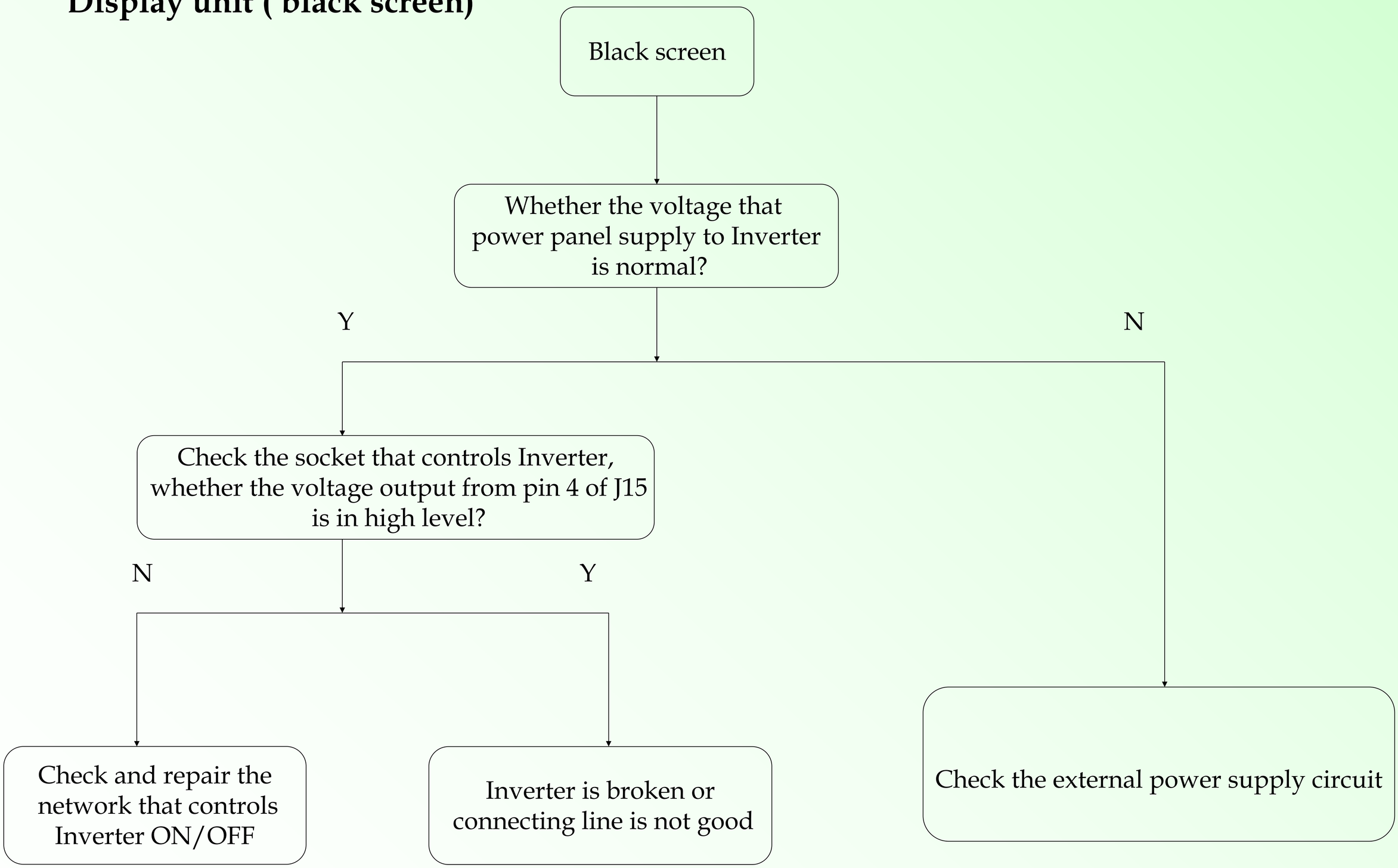

Picture 3

Audio part (no sound)

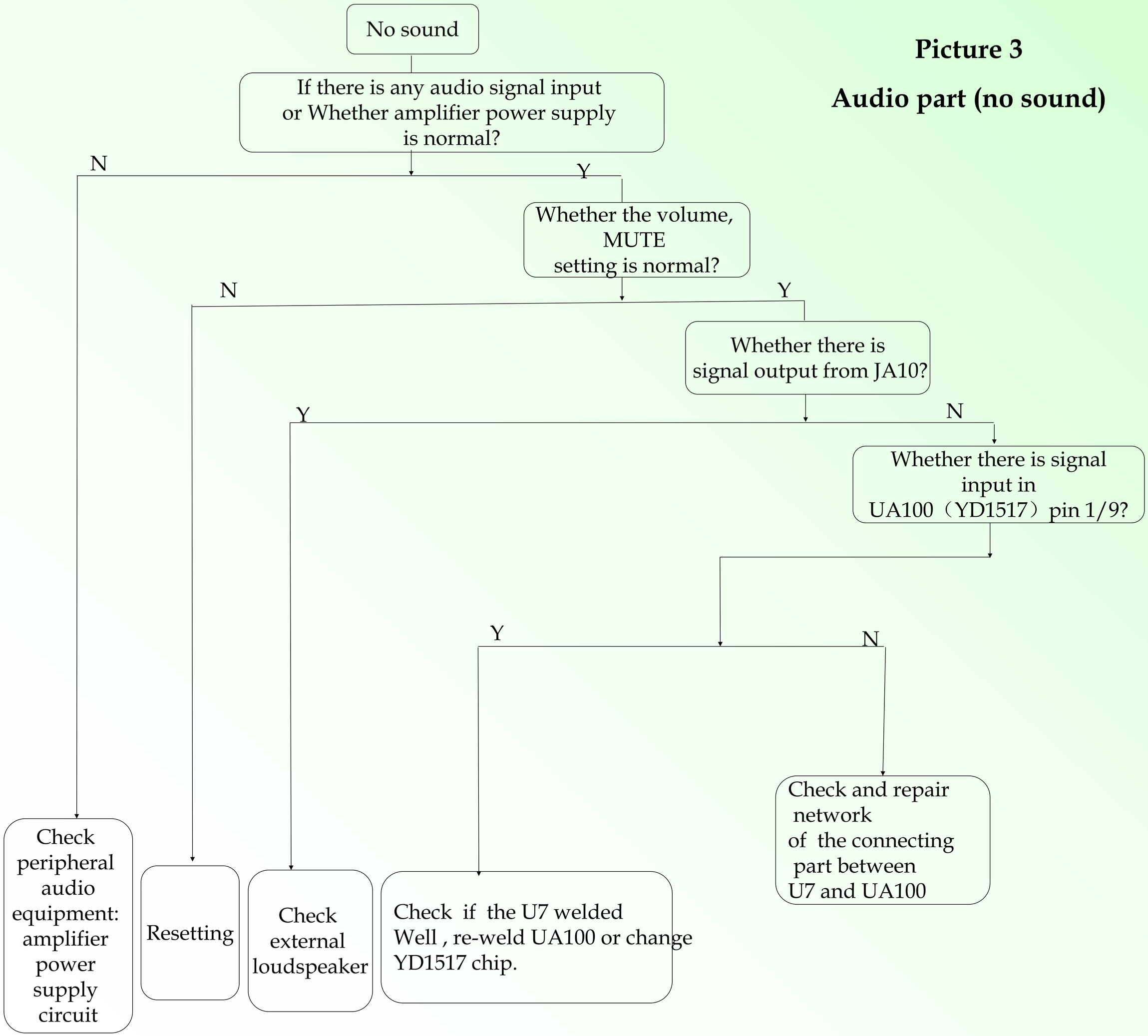

Picture 4
T2+T+C Function unit (ATV/DTV video broke down)

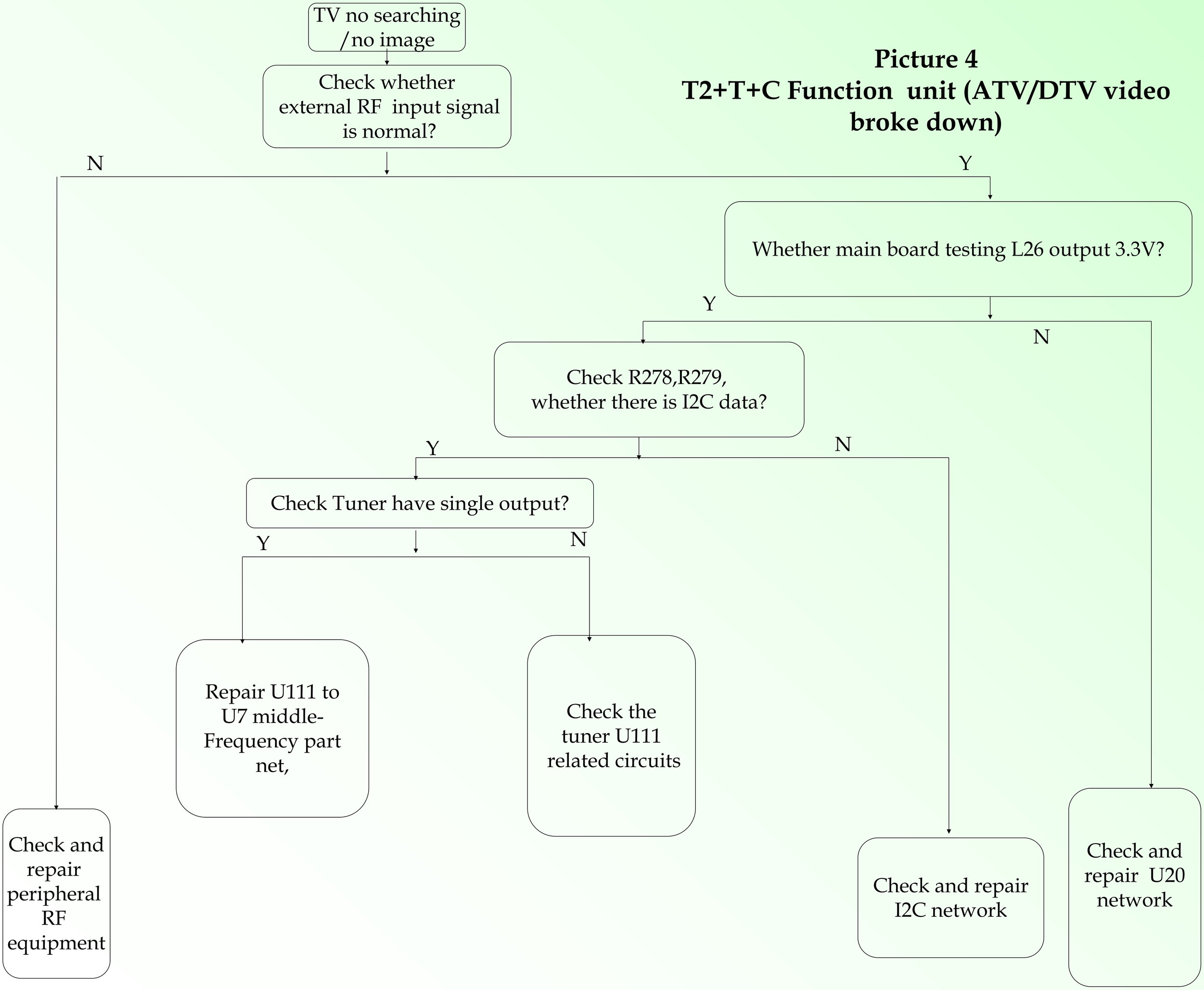

Picture 5
S2 Function unit (DTV video broke down)

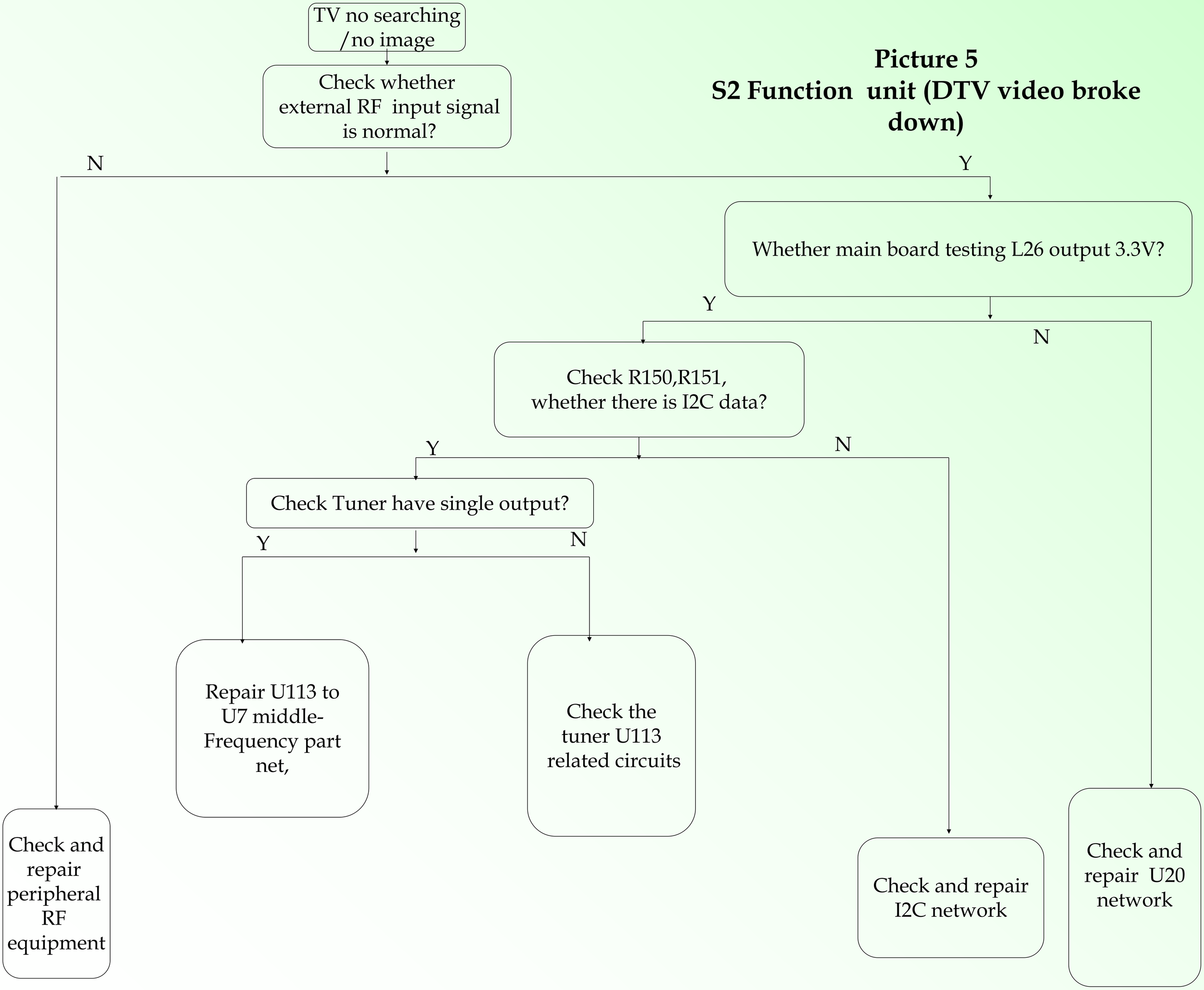

Picture 6

Function unit (ATV/DTV no sound)

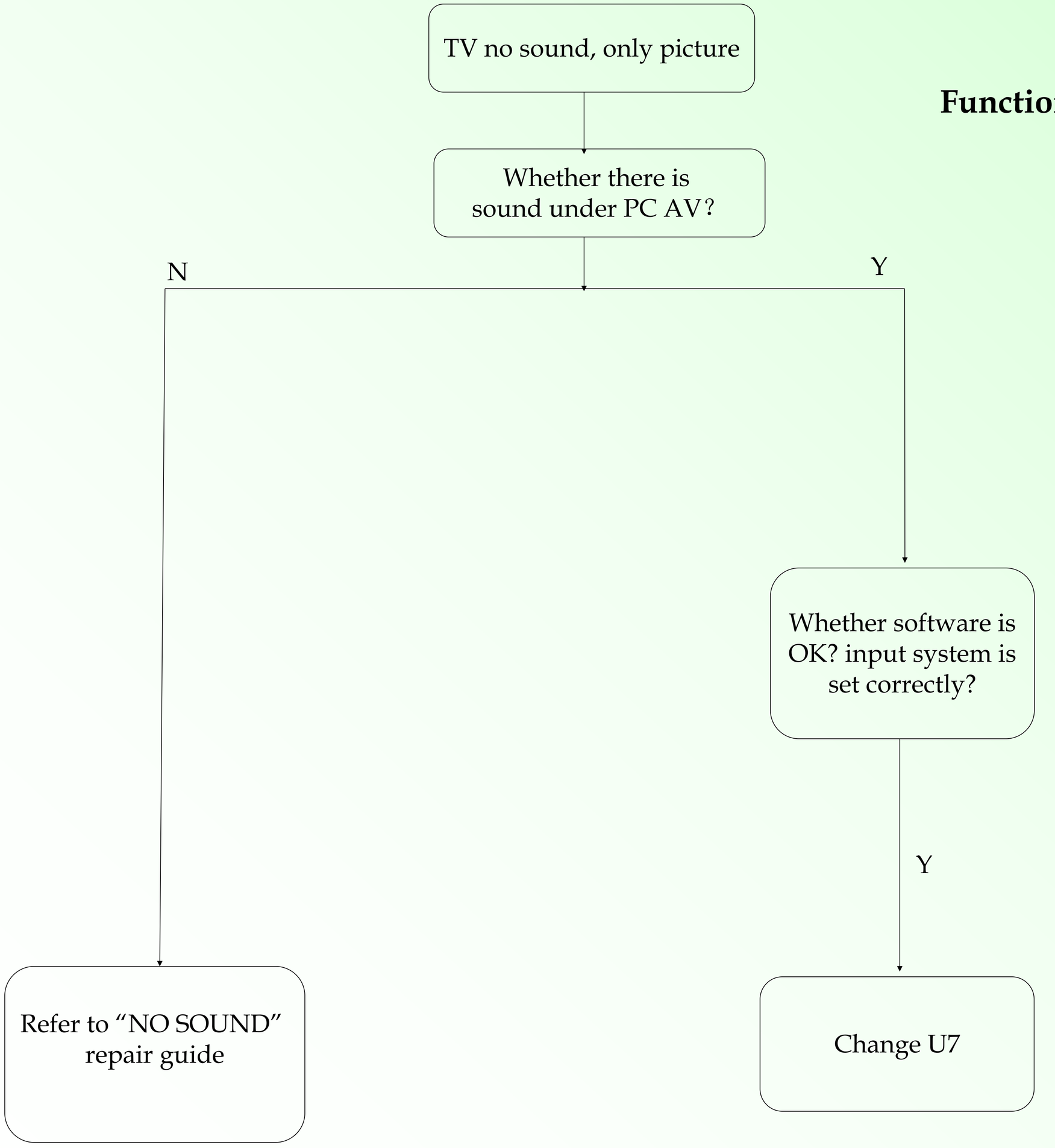

Picture 7

Function unit（PC）

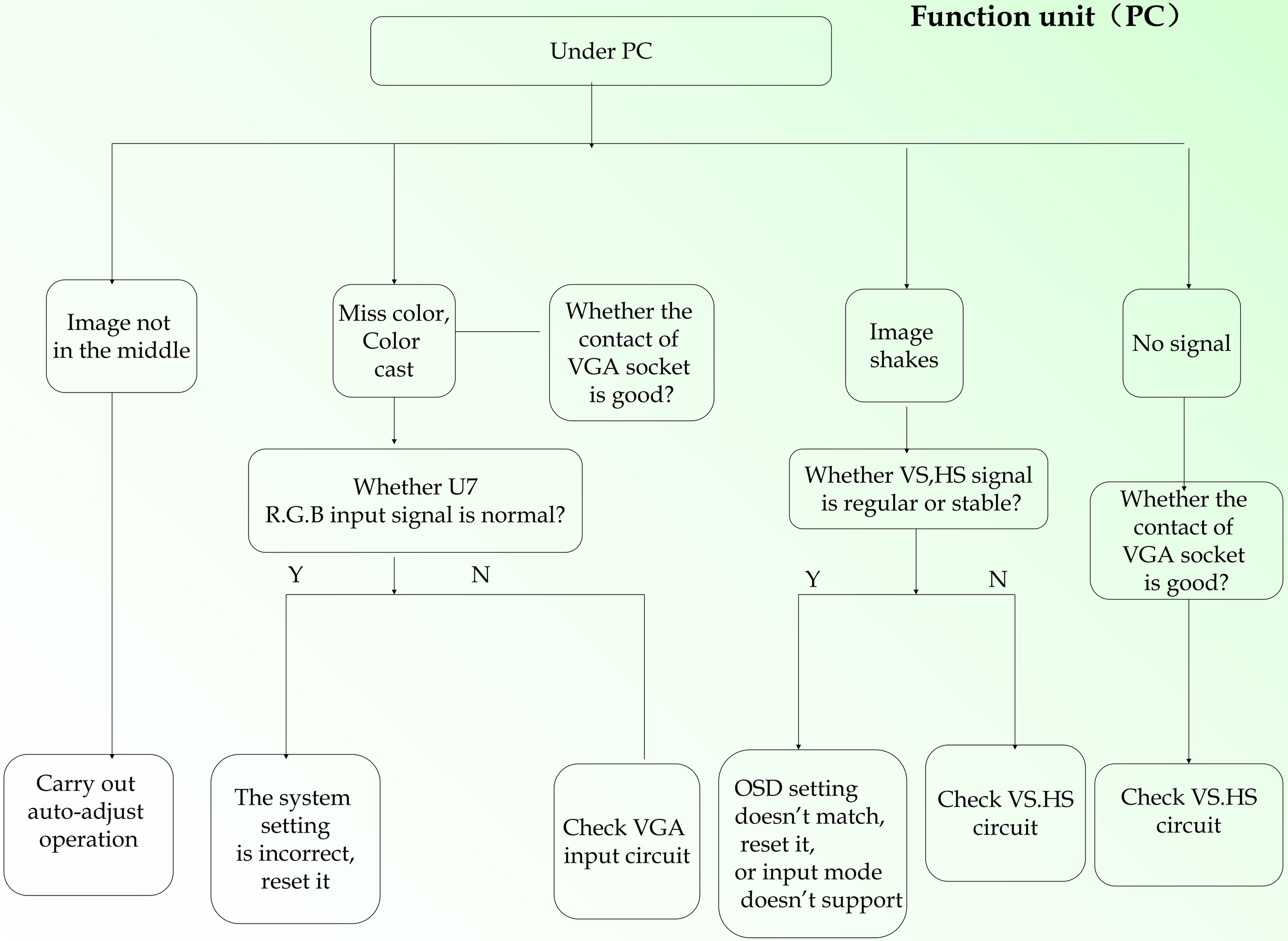

Picture 8

Function unit（HDMI）

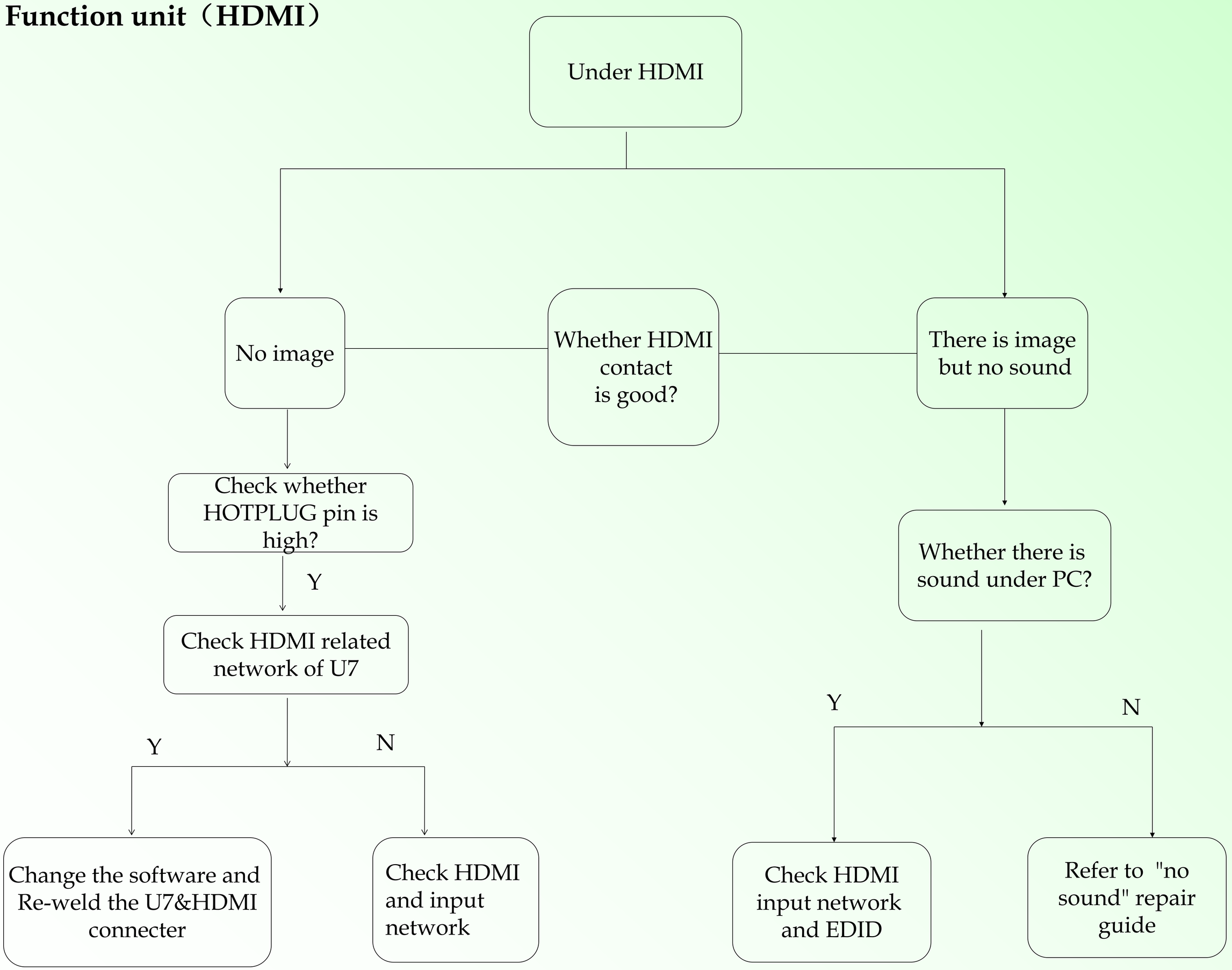

Picture 9
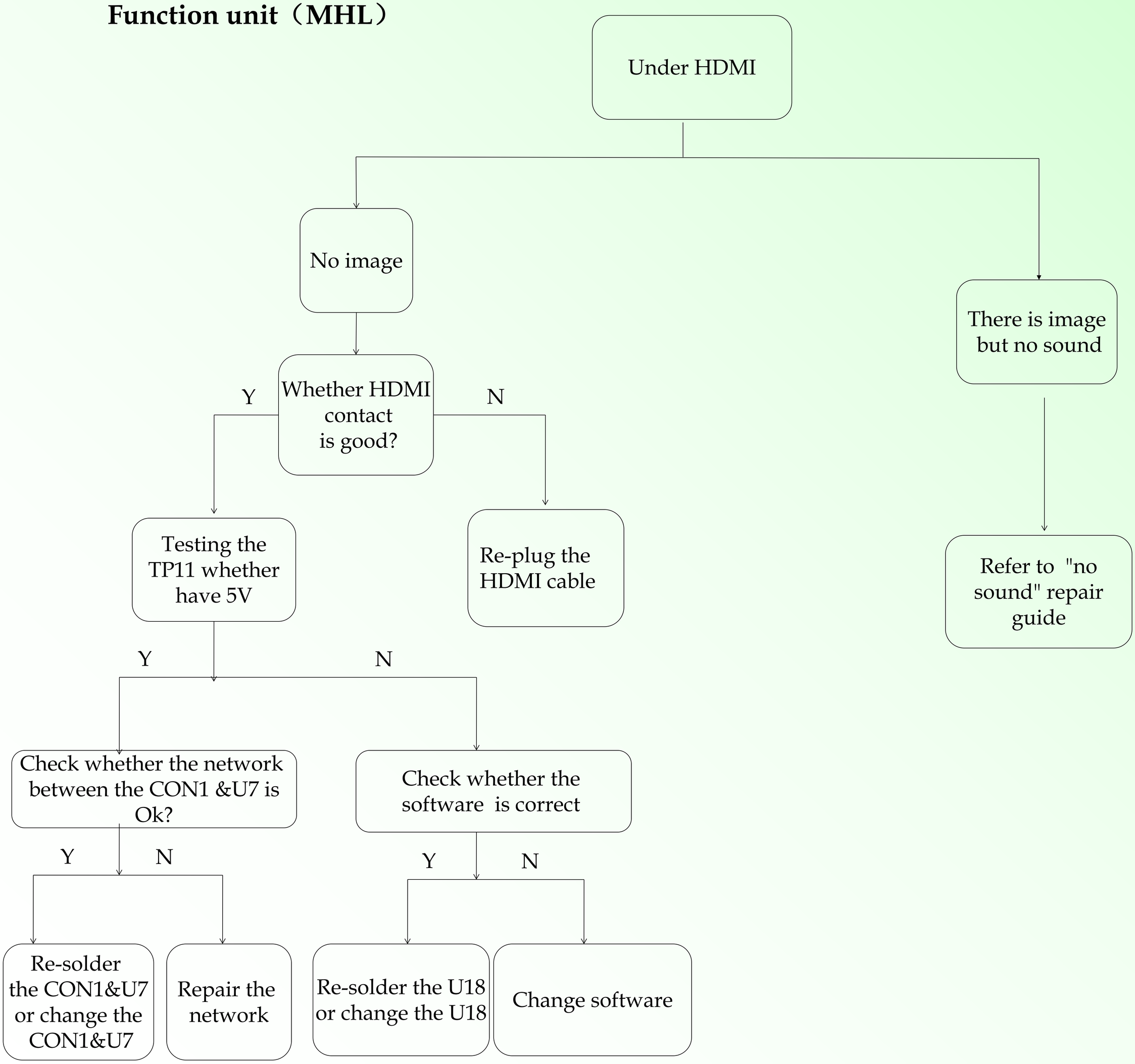
Function unit（MHL）