06 Schematics and Layouts

6.1 PI BD Layout

LAYER	SILKSCREEN TOP			
PCB NO :	49.20914.001.00R	REV :	A	DESIGNER: HUA LIU
FILE NAME :	ILPI-129	DATE :	2008.09.29.	

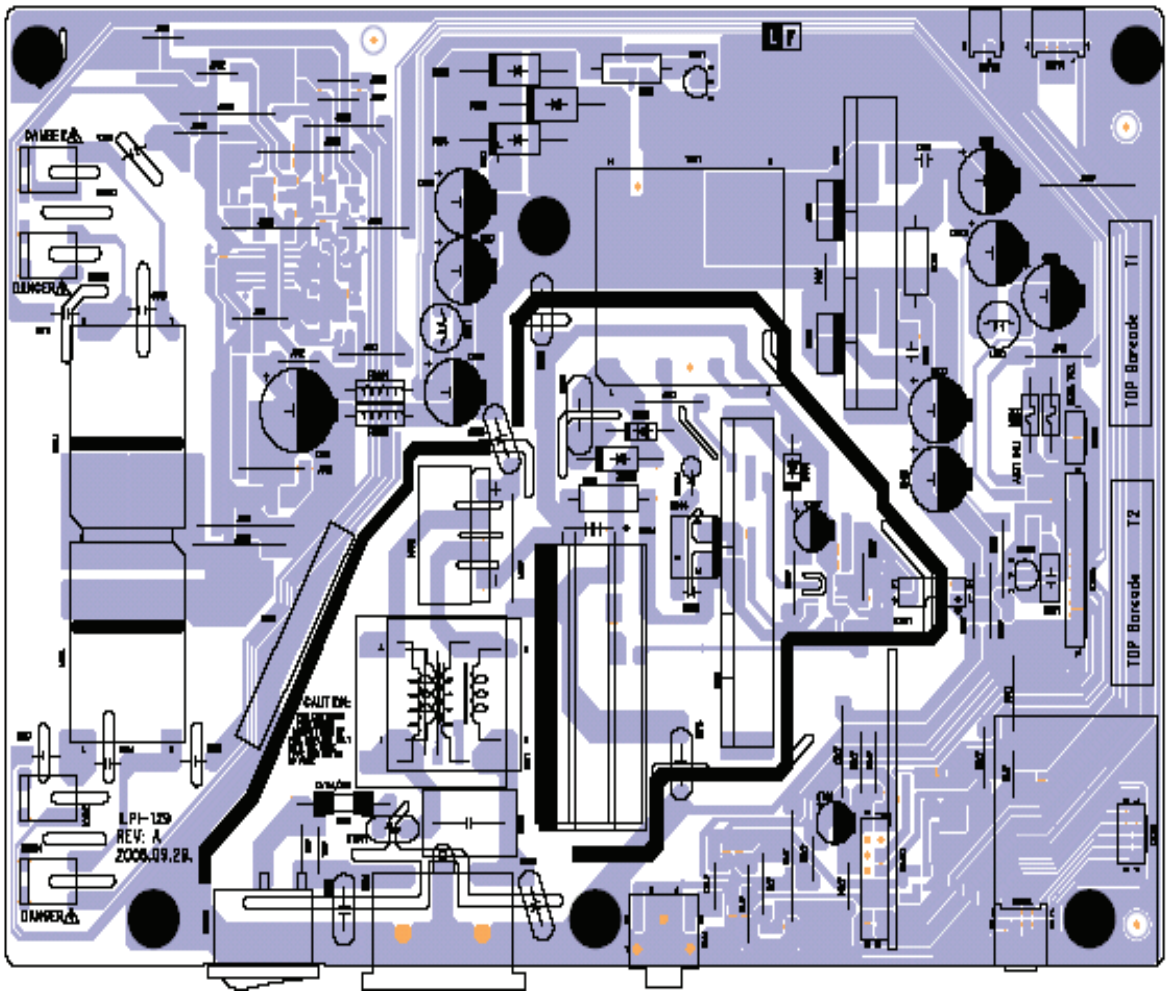
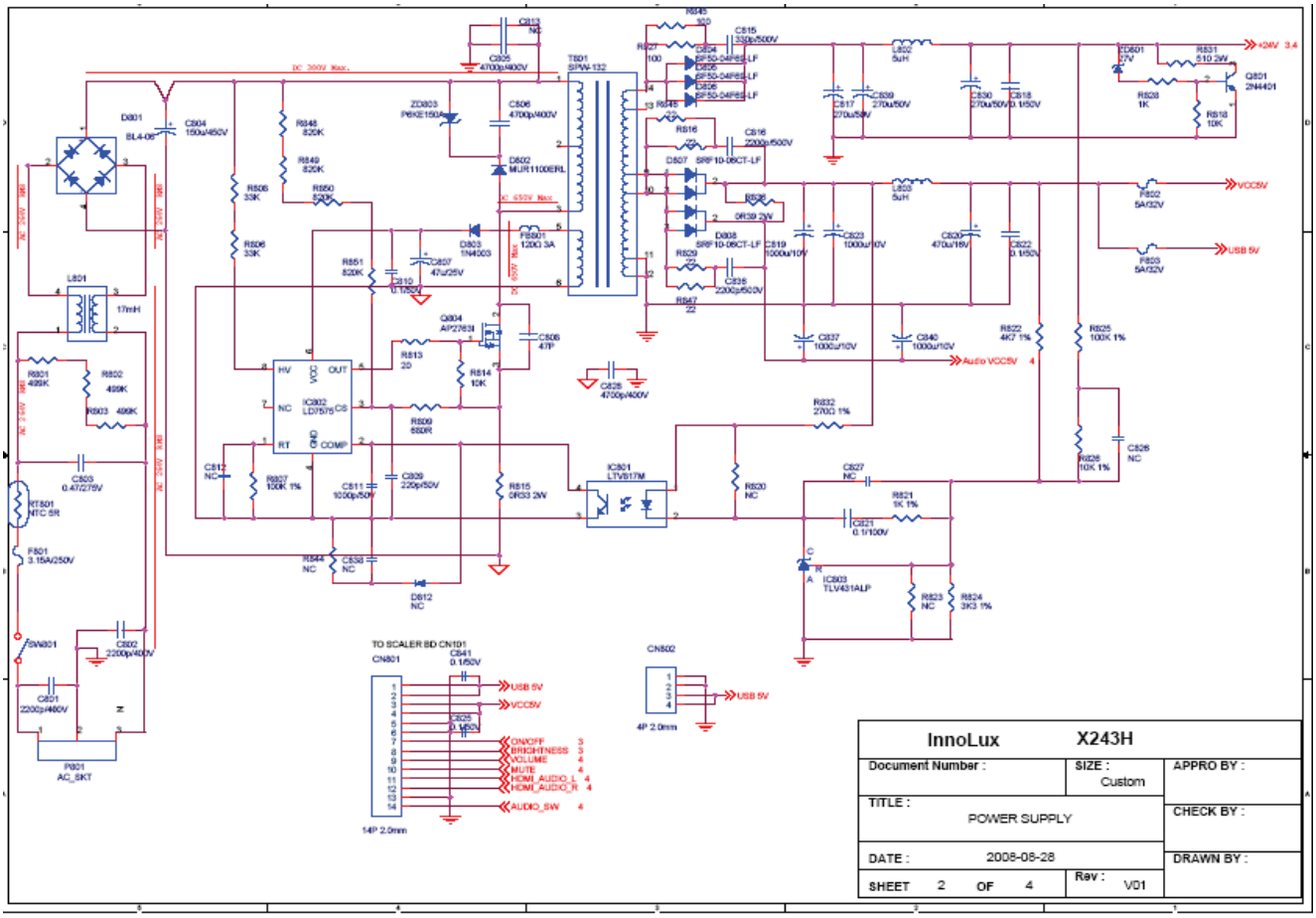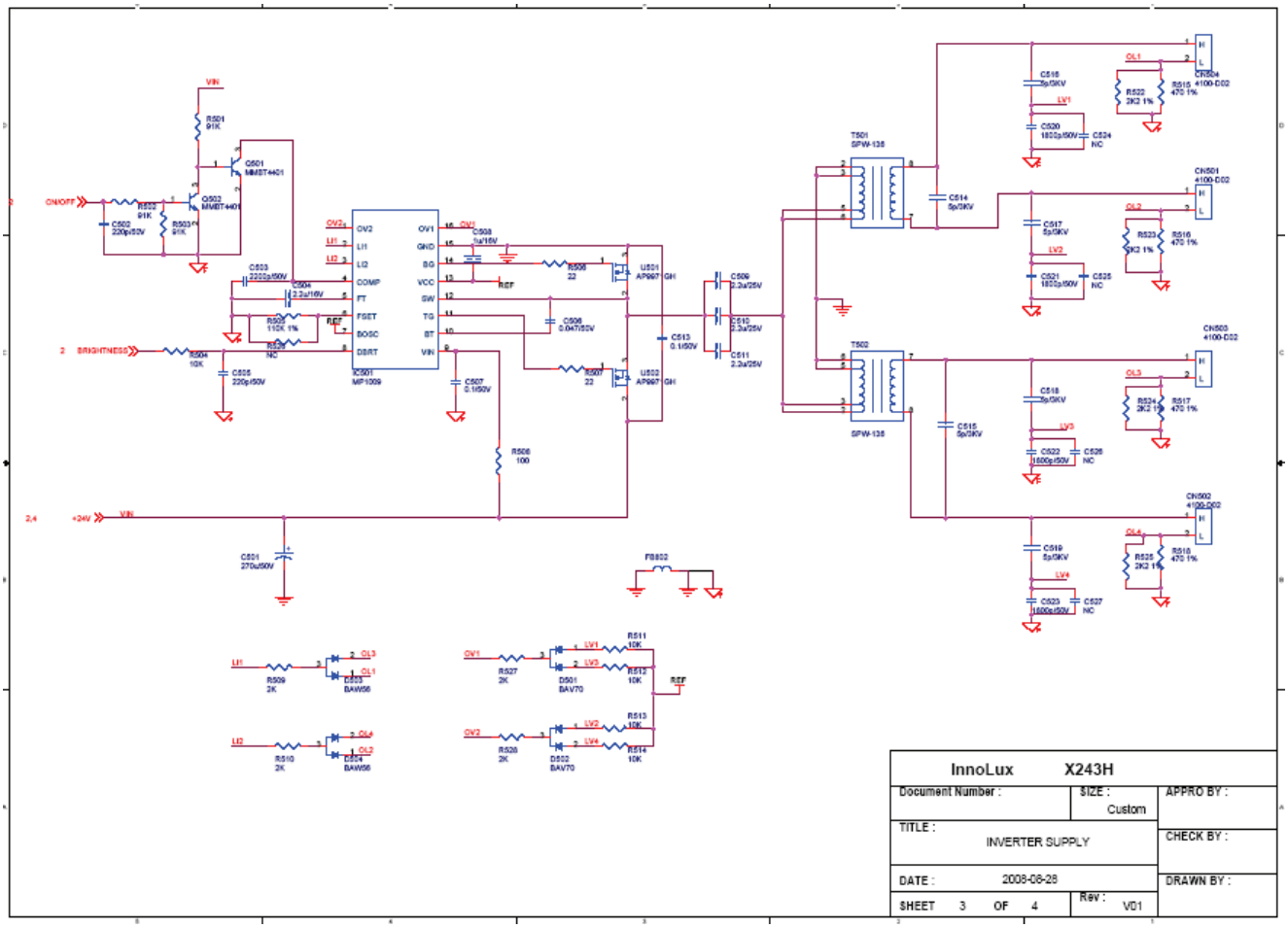
6.2 Switching Mode Power Supply circuit