❊ This Document can not be used without Samsung's authorization.

11-4 LW17M24C/LW17M21CU IP Board_1 Schematic Diagram

SAMSUNG
CONFIDENTIAL

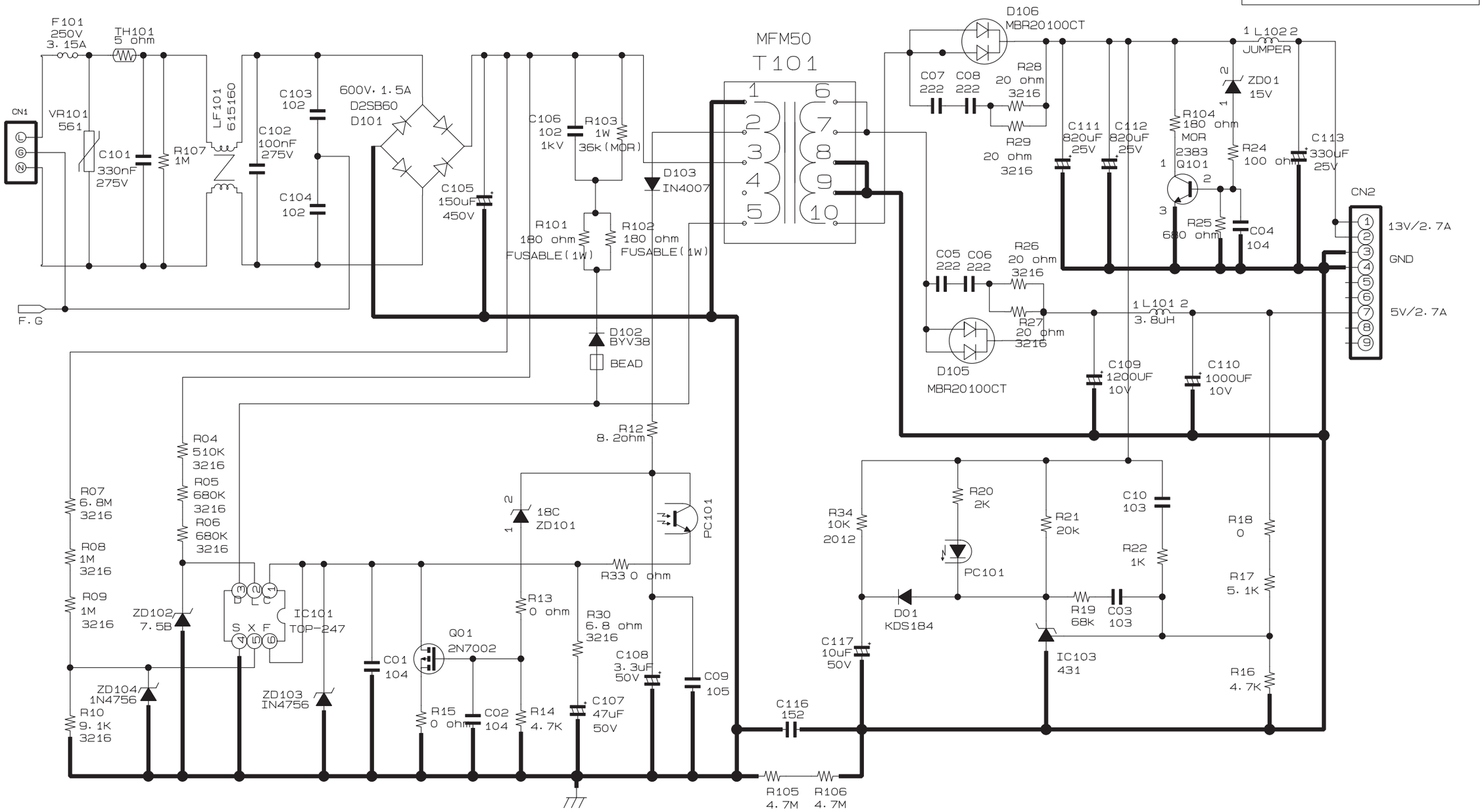

❊ This Document can not be used without Samsung's authorization.
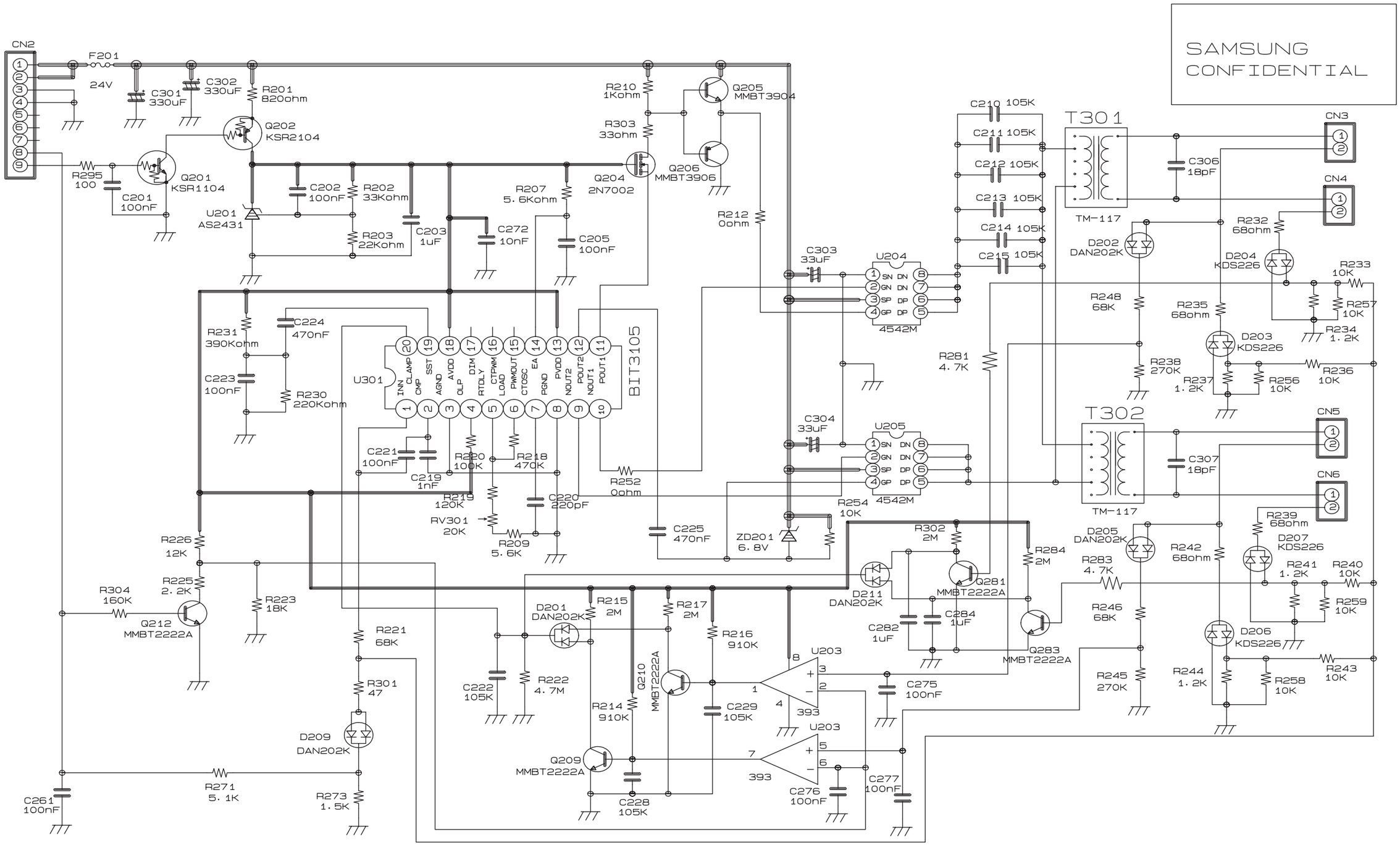
11-5 LW17M24C/LW17M21CU IP Board_2 Schematic Diagram