Applicable Country & Regions: TAIWAN

Service Manual for BenQ:

LED-TV/32RL7500

TW< 9H.V3575.TBT >

LED-TV/42RL7500

TW< 9H.V3775.TBT >

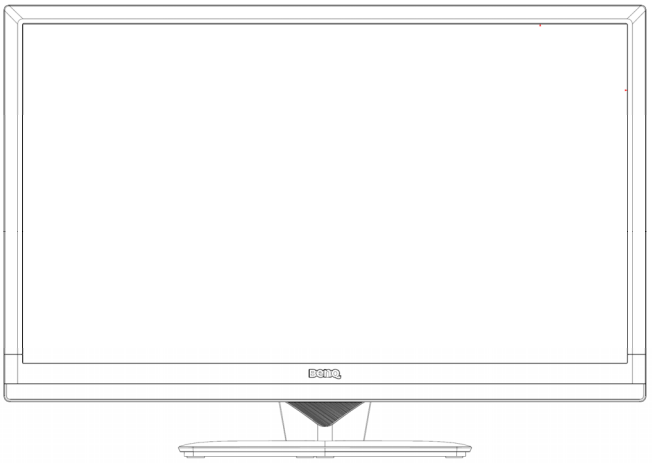

Product Service Manual – Level 3

Version: 1st

Date:2012/11/16

Notice:

For RO to input specific "Legal Requirement" in specific NS regarding to responsibility and liability statements.

Please check BenQ's eSupport web site, http://esupport.benq.com, to ensure that you have the most recent version of this manual.

First Edition (Oct. 2012)

© Copyright BenQ Corporation 2012. All Right Reserved.

Content Index

Level 3 - Component Repair to Circuit Boards **3**

Circuit Schematics 3

PCB Layout 21

Level 3 - Component Repair to Circuit Boards

Circuit Schematics

Main Board

715G5499M01000005X

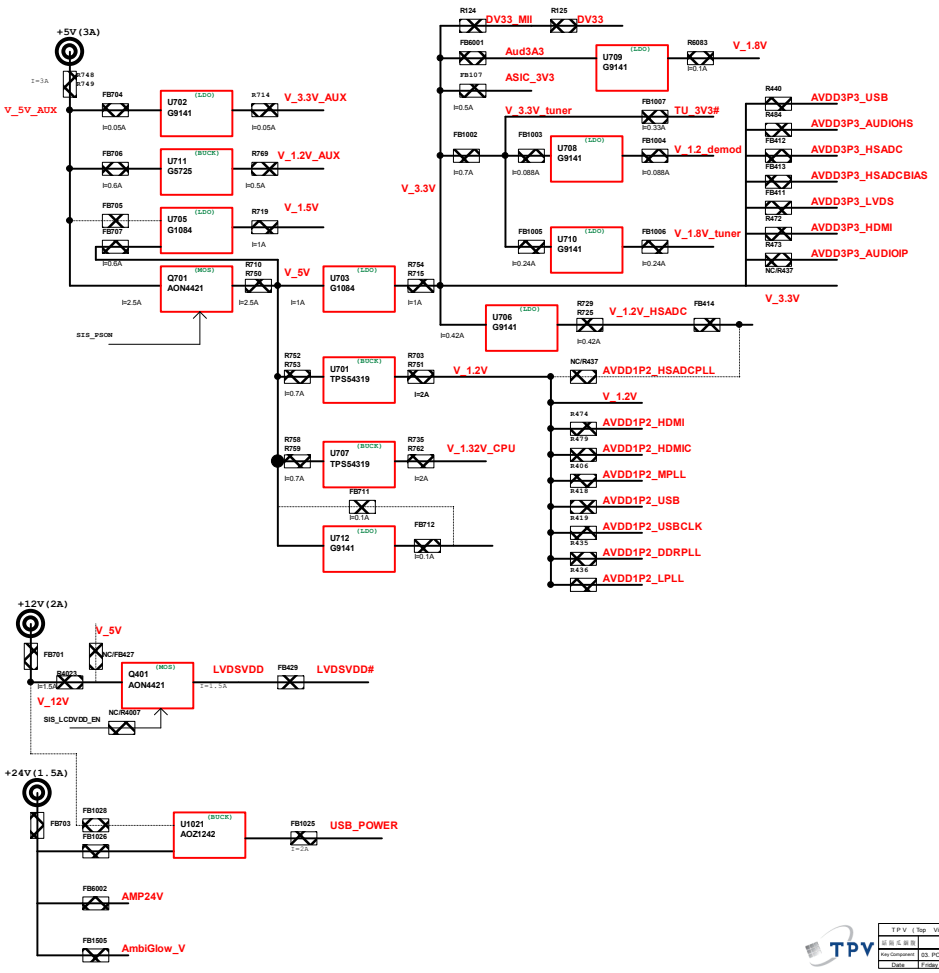

Mam Power Consumption

Core Logic CPU (Main)	1.32V	2000mA
Core Logic (Main)	1.2V	2000mA
Core Logic)Aux)	1.2V	1000mA
ADC (Main)	1.2V	420mA
I/O (Main)	3.3V	450mA
I/O)Aux)	3.3V	90mA
DDR3 I/O (Main)	1.5V	750mA(w/DDR3*2)

Power Consumption during Stanby Mode

Core Logic (Aux)	1.2V	100mA
I/O (Aux)	3.3V	15mA

TPV (Top Victory Electronics Co., Ltd.)	OEM MODEL		Size C
	TPV MODEL		Rev A
Key Component	PCB NAME	715G5000M0A-000-0050_V5_2.pcb	
Date Friday, February 03, 2012	Sheet 3 of 21		

明基電通 BenQ Corporation

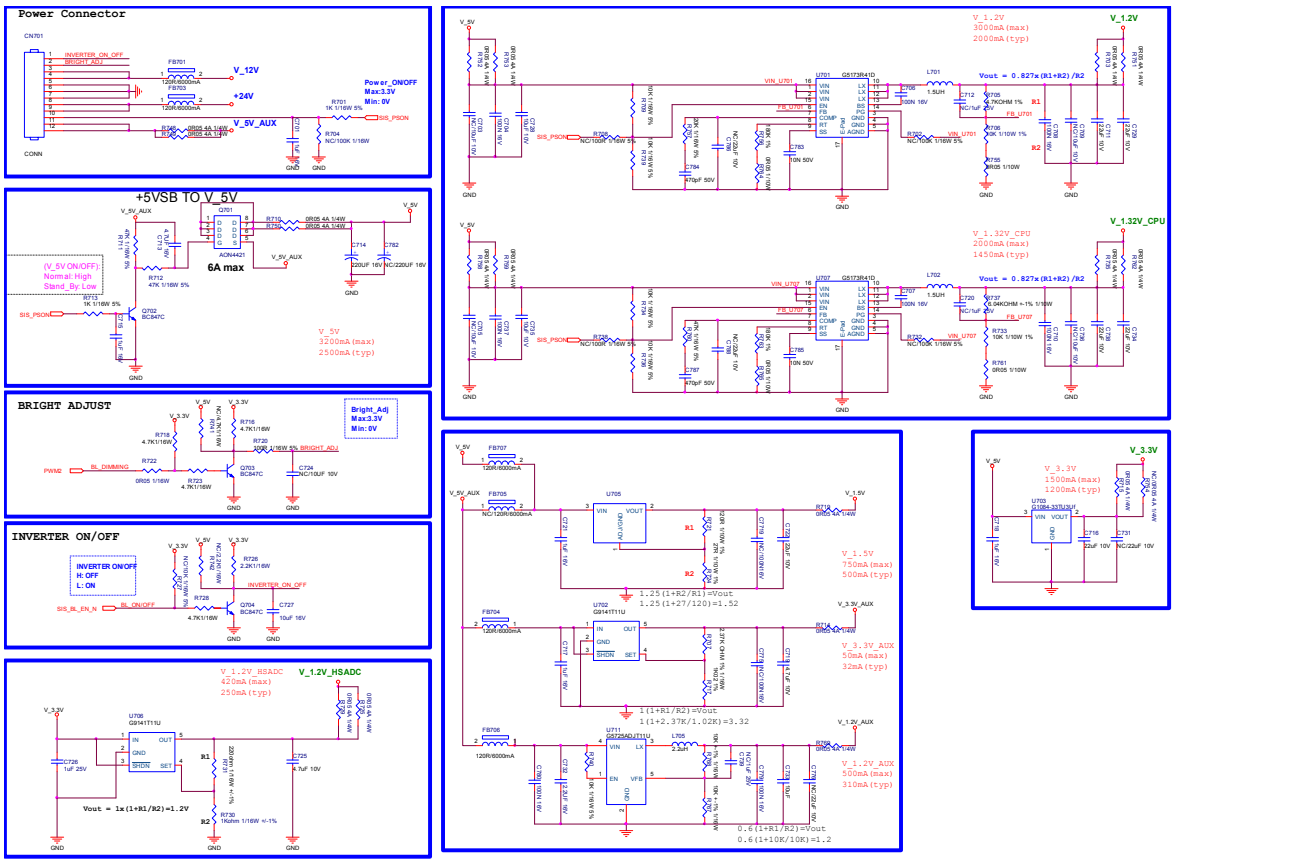

TPV (Top Victory Electronics Co., Ltd.)		OEM MODEL		Size	C
顶新电子股份		TPV MODEL		Rev	A
Key Component	04. POWER SYSTEM	PCB NAME		日 期	<日期>
Date	Friday, February 24, 2012	Sheet	4 of 21		

明基電通 BenQ Corporation

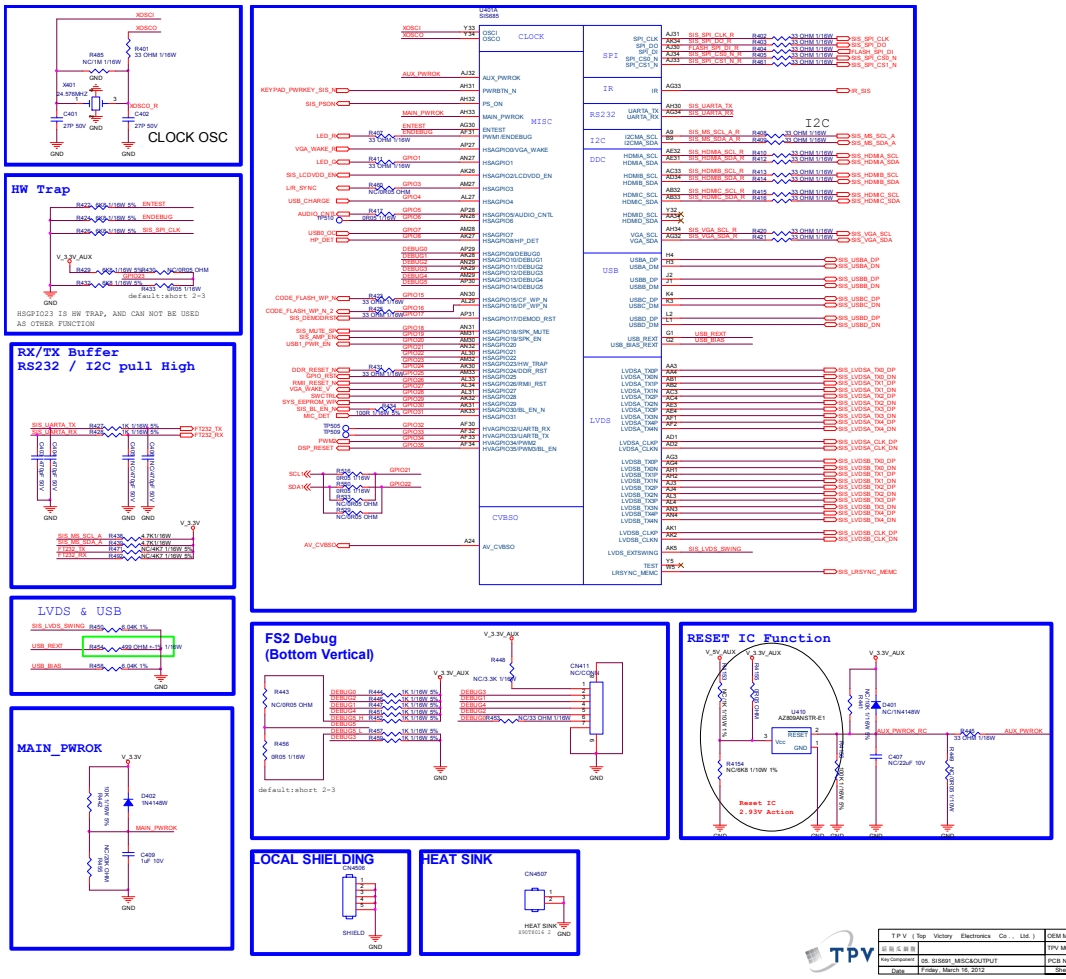

T P V (Top Victory Electronics Co., Ltd.)	OEM MODEL		Size C
廣勝電子股份有限公司	TPV MODEL		Rev A
Key Component	PCB NAME		檢查 <檢查>
Date Friday, March 16, 2012	Sheet 5 of 21		

明基電通 BenQ Corporation

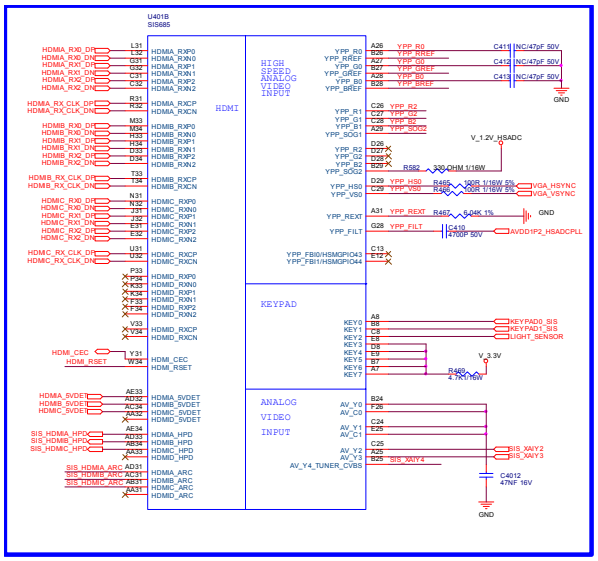

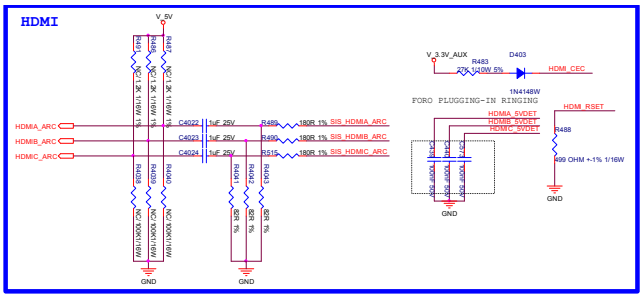

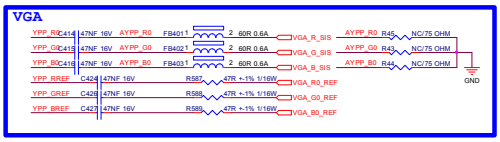

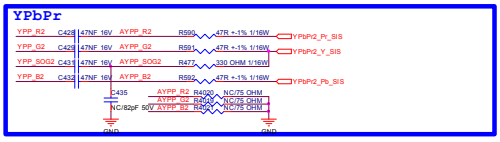

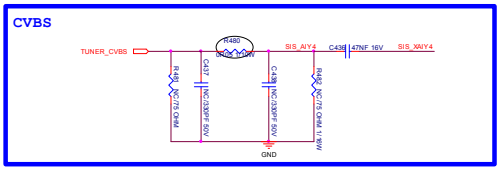

TPV	T P V (Top Victory Electronics Co., Ltd.)	OEM MODEL		Size	Custom
	新福瓜鋼廠	TPV MODEL		Rev	A
	Key Component 06. SIS691_VIDEO INTERFACE	PCB NAME		檢核	<檢核>
	Date Friday, February 24, 2012	Sheet 6 of 21			

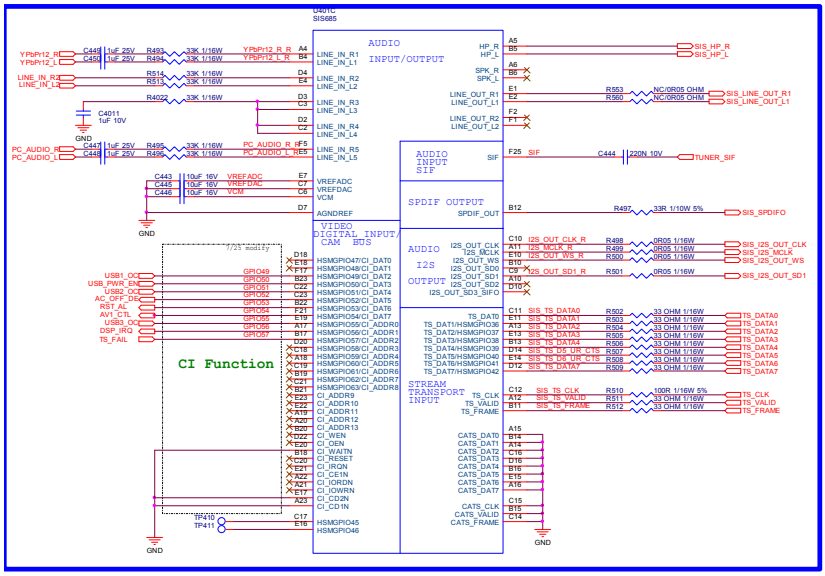

TPV	T P V (Top Victory Electronics Co., Ltd.)	OEM MODEL		Size	B
	新福瓜鋼廠	TPV MODEL		Rev	A
	Key Component 07. SIS691_AUDIO/TS INTERFACE	PCB NAME		檢核	<檢核>
	Date Friday, December 16, 2011	Sheet 7 of 21			

明基電通 BenQ Corporation

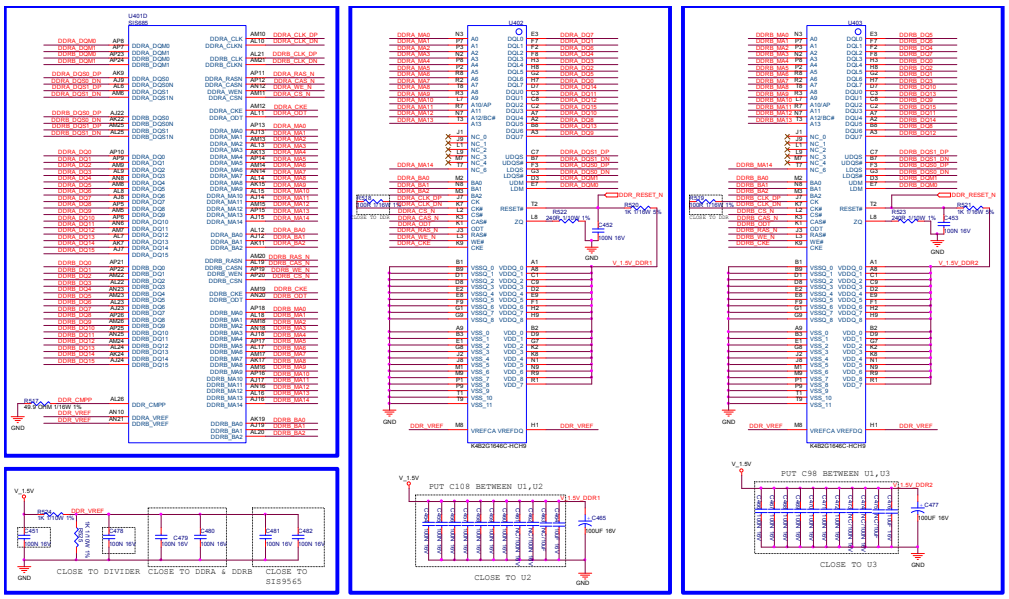

DDR3
Smart
U402 U403 2Gb
"356G0615164"
"356G0615163"
"056G 615142"
Regular
U402 1Gb "056G 615151"

TPV (Top Victory Electronics Co., Ltd.)		OEM MODEL		Size	Custom
鼎新電腦股份		TPV MODEL		Rev	A
Key Component	08. SIS891_DDR3*2	PCB NAME			
Date	Friday, February 24, 2012	Sheet	8 of 21	修改	<修改>

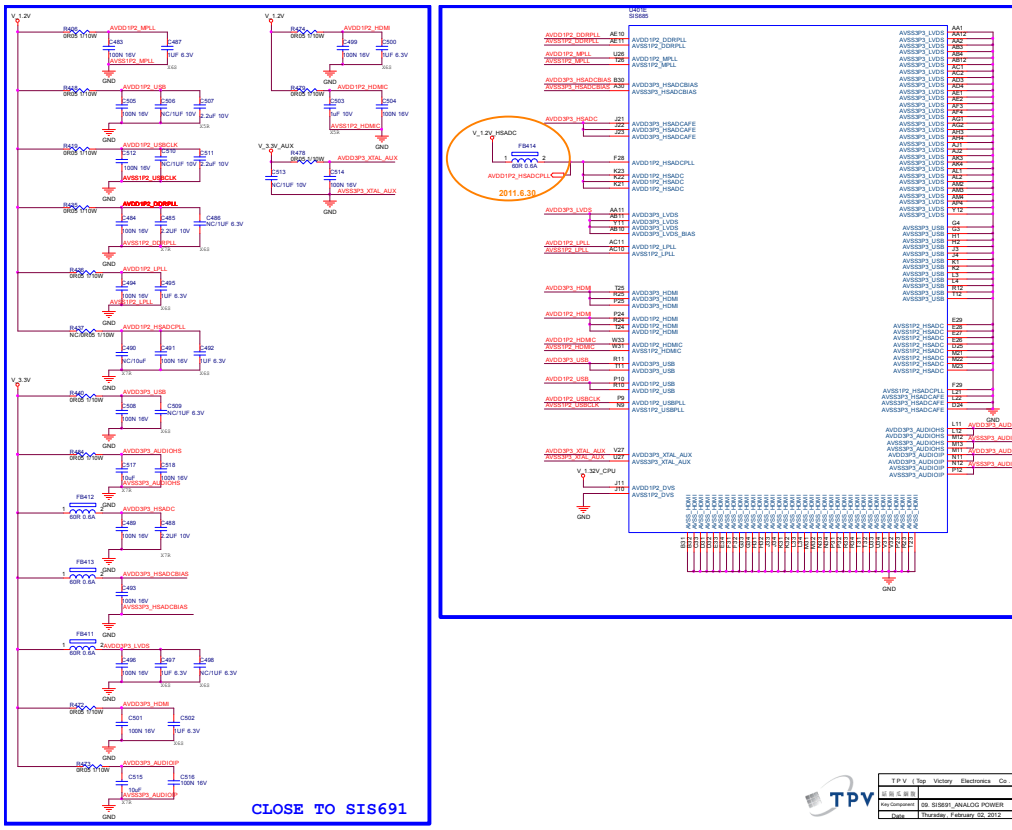

TPV (Top Victory Electronics Co., Ltd.)		OEM MODEL		Size	C
鼎新電腦股份		TPV MODEL		Rev	A
Key Component	09. SIS891_ANALOG POWER	PCB NAME			
Date	Thursday, February 02, 2012	Sheet	09 of 21	修改	<修改>

明基電通 BenQ Corporation

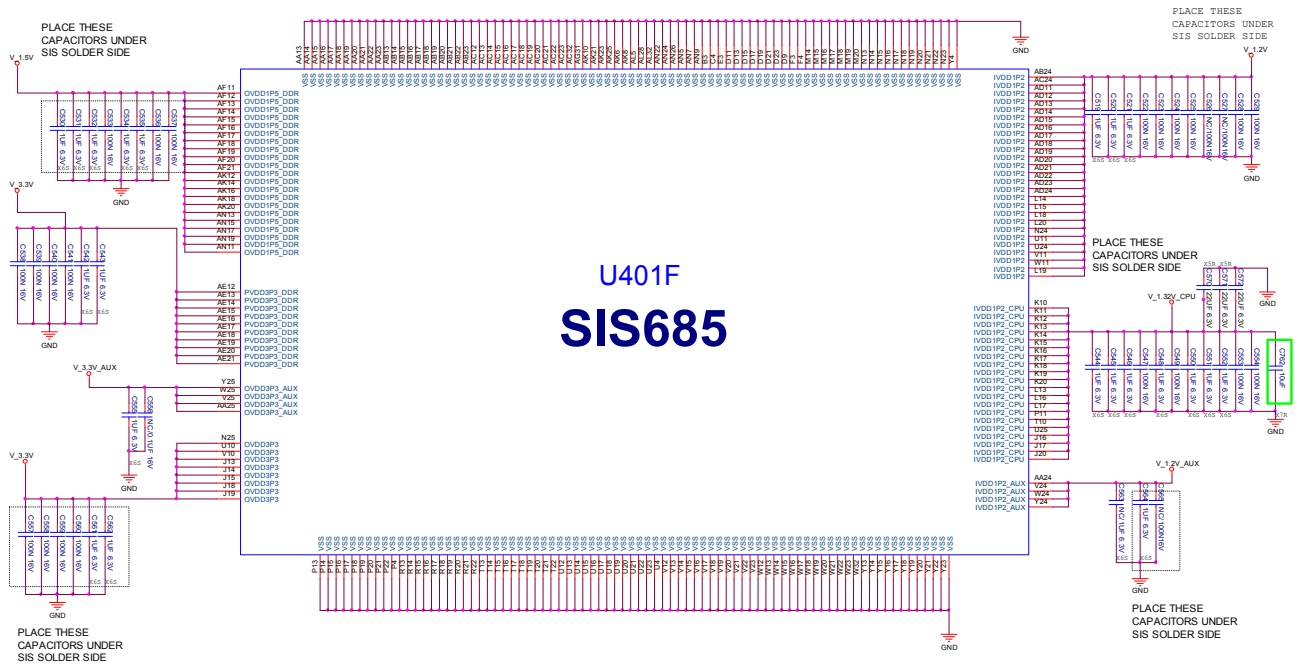

TPV (Top Victory Electronics Co., Ltd.)		OEM MODEL		Size	Custom
頂瑞瓦旗股		TPV MODEL		Rev	A
Key Component	10. SIS691_DIGITAL POWER	PCB NAME		称審	<称審>
Date	Thursday, February 02, 2012	Sheet	10 of 21		

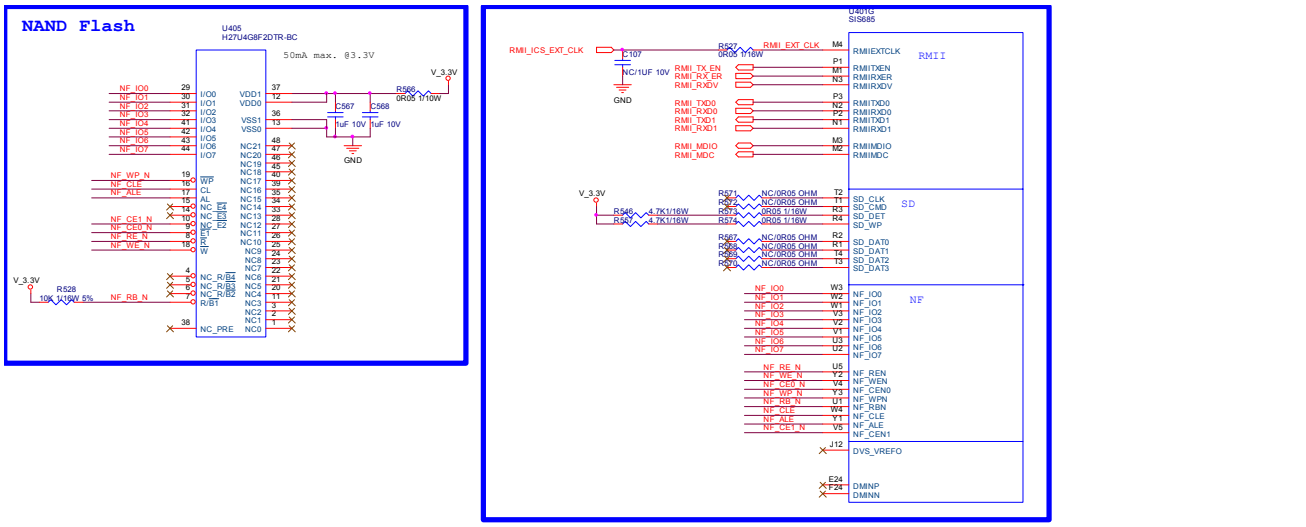

TPV (Top Victory Electronics Co., Ltd.)		OEM MODEL		Size	B
頂瑞瓦旗股		TPV MODEL		Rev	A
Key Component	11. SIS691_NAND FLASH/RMII	PCB NAME		称審	<称審>
Date	Friday, December 16, 2011	Sheet	11 of 21		

明基電通 BenQ Corporation

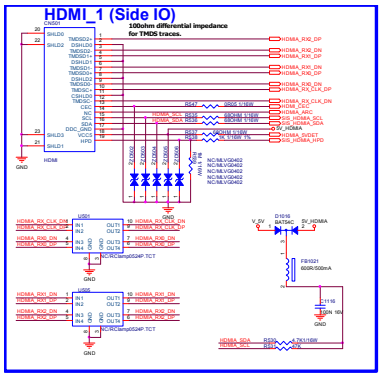

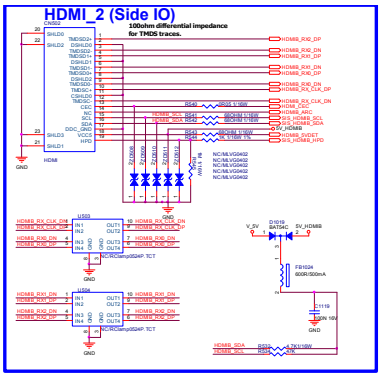

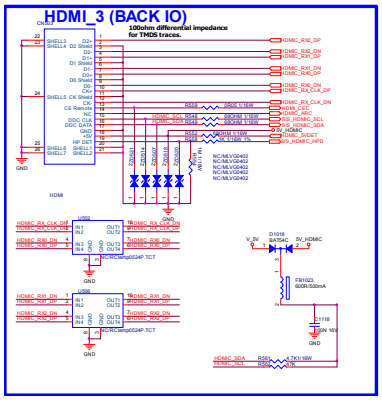

TPV (Top Victory Electronics Co., Ltd.)		OEM MODEL		Size	A2
部長名稱簽		TPV MODEL		Rev	A
Key Component	12. HDMI CONNECTORS	PCB NAME		檢查	<檢查>
Date	Tuesday, February 21, 2012	Sheet	12 of 21		

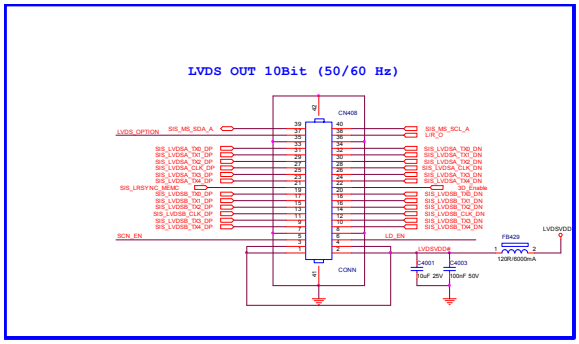

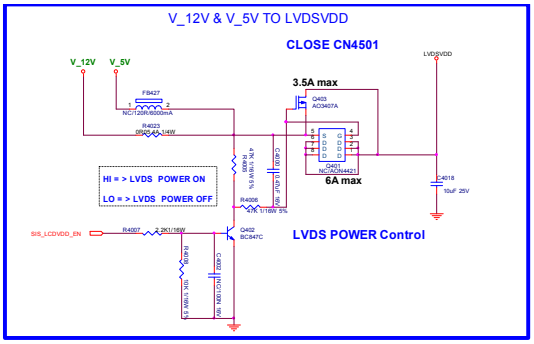

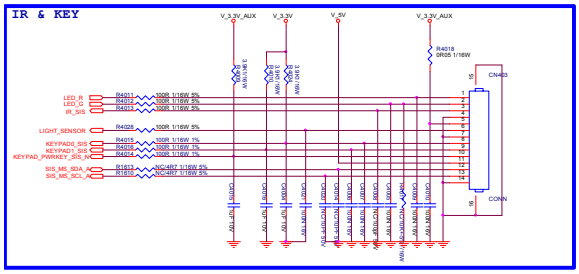

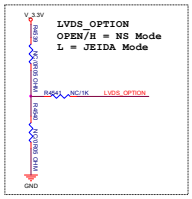

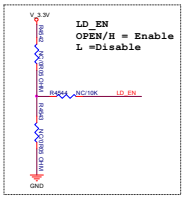

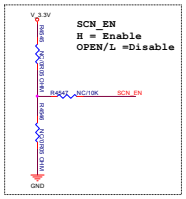

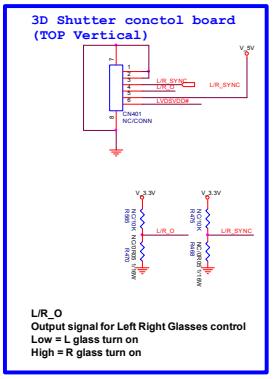

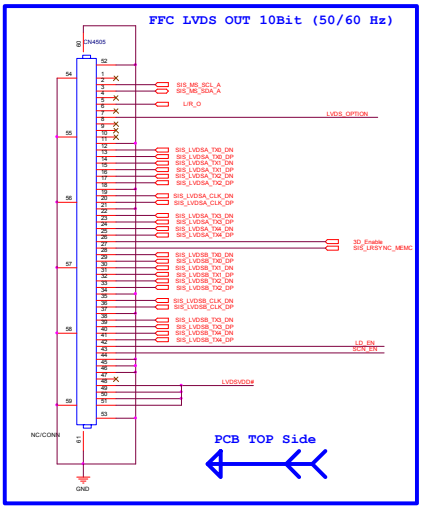

TPV (Top Victory Electronics Co., Ltd.)		OEM MODEL		Size	C
部長名稱簽		TPV MODEL		Rev	A
Key Component	13. LDVS+KEYP_INTERFACE	PCB NAME		檢查	<檢查>
Date	Friday, March 16, 2012	Sheet	13 of 21		

明基電通 BenQ Corporation

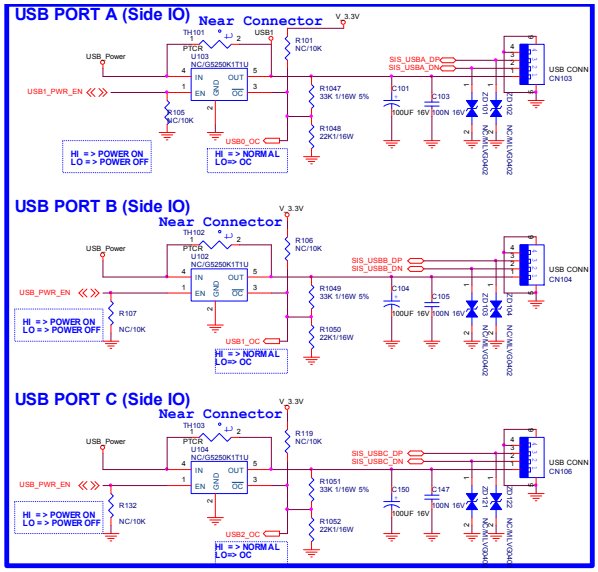

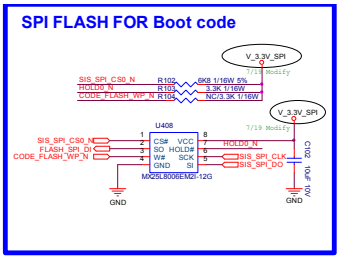

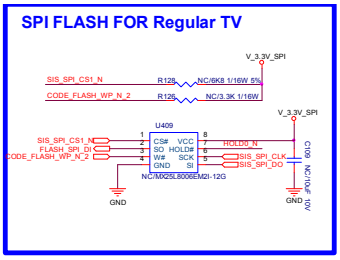

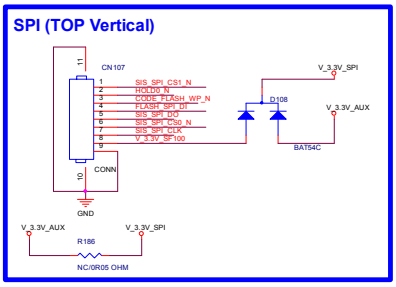

Nor flash
Smart
U408 8Mb "056G2233 19 "
Regular
U408 32Mb "056G2233 34"
U409 16Mb "056G2233506"

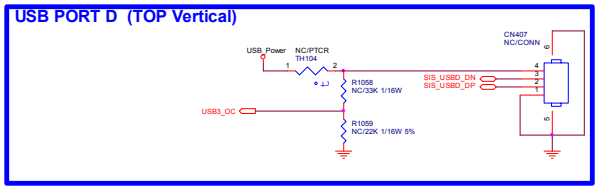

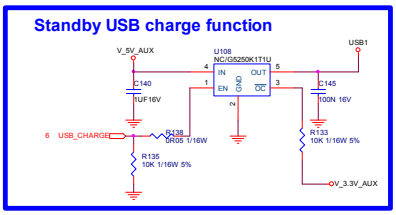

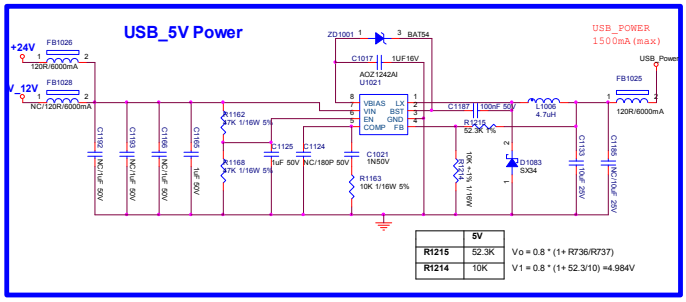

T P V (Top Victory Electronics Co., Ltd.)		OEM MODEL		Size	Custom
		TPV MODEL		Rev	A
Key Component	14. USB/SPI FLASH	PCB NAME			
Date	Tuesday, February 14, 2012	Sheet	14 of 21		

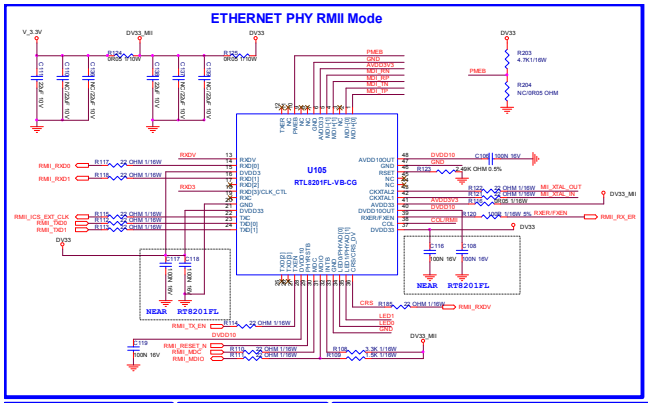

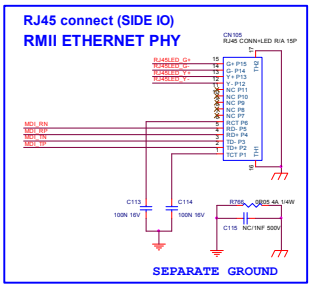

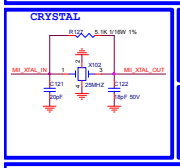

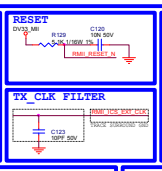

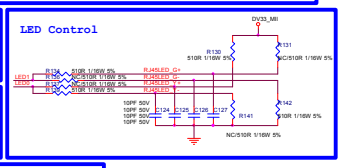

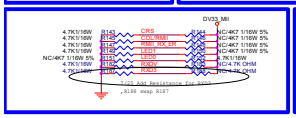

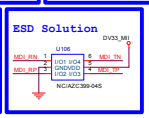

T P V (Top Victory Electronics Co., Ltd.)		OEM MODEL		Size	C
		TPV MODEL		Rev	A
Key Component	15. RMII_IP101A_PHY_RJ45	PCB NAME			
Date	Monday, March 12, 2012	Sheet	15 of 21		

明基電通 BenQ Corporation

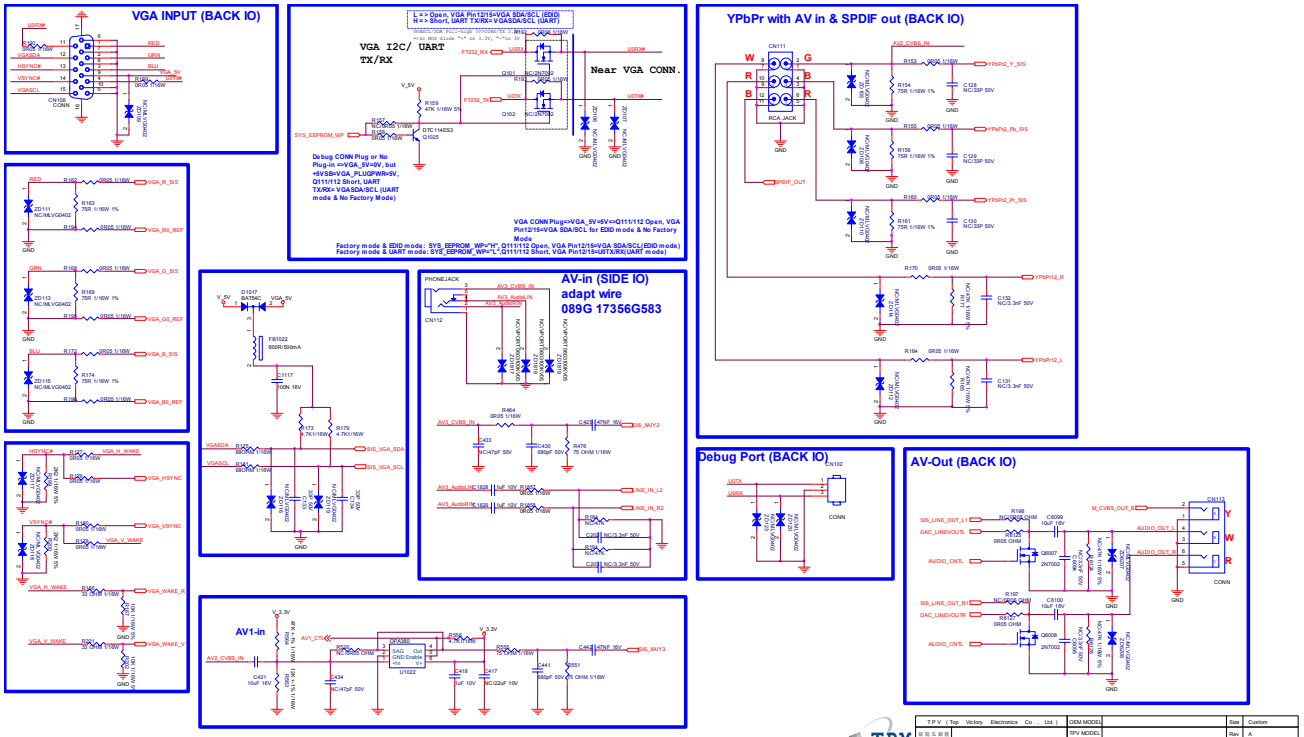

TPV (Top Victory Electronics Co., Ltd.)	OEM MODEL		Size	Custom
鼎悦电子股份	TPV MODEL		Rev	A
Key Component	16. YPbPR/VGA/Side-AV	PCB NAME	图 号	<REB>
Date: Monday, March 12, 2012	Sheet 16 of 21			

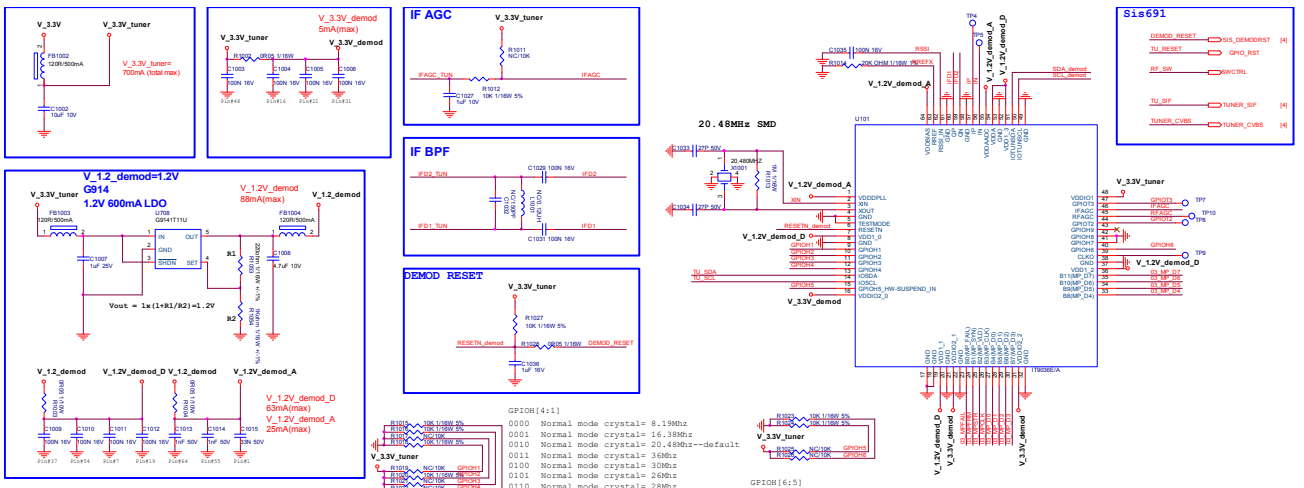

TPV (Top Victory Electronics Co., Ltd.)	OEM MODEL		Size	C
鼎悦电子股份	TPV MODEL		Rev	A
Key Component	17. TUNER & DEMOD	PCB NAME	图 号	<REB>
Date: Thursday, February 09, 2012	Sheet 17 of 21			

明基電通 BenQ Corporation

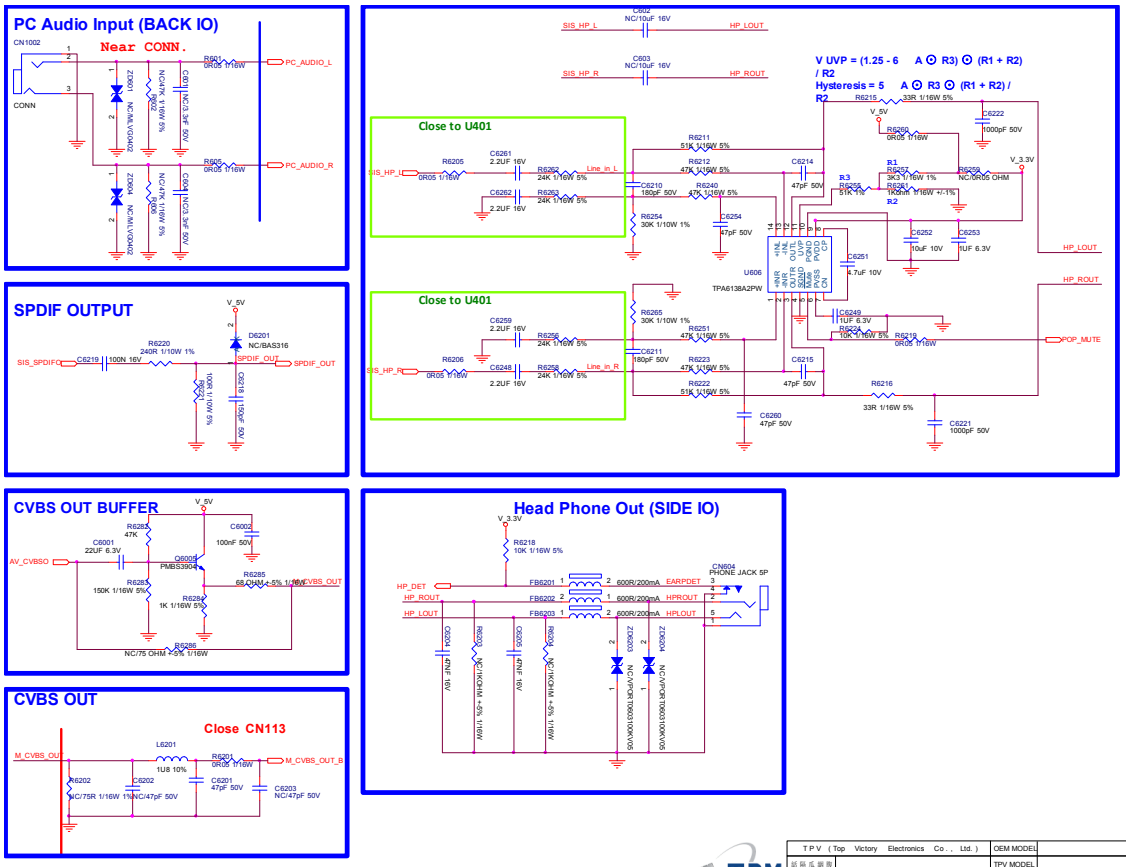

T P V （Top Victory Electronics Co.，Ltd.）		OEM MODEL		Size	A3
拓新元科技		TPV MODEL		Rev	A
Key Component		18. PC_Audio/SPDIF/HARPHONE	PCB NAME		
Date	Friday, March 16, 2012	Sheet	18 of 21	核准	<核准>

明基電通 BenQ Corporation

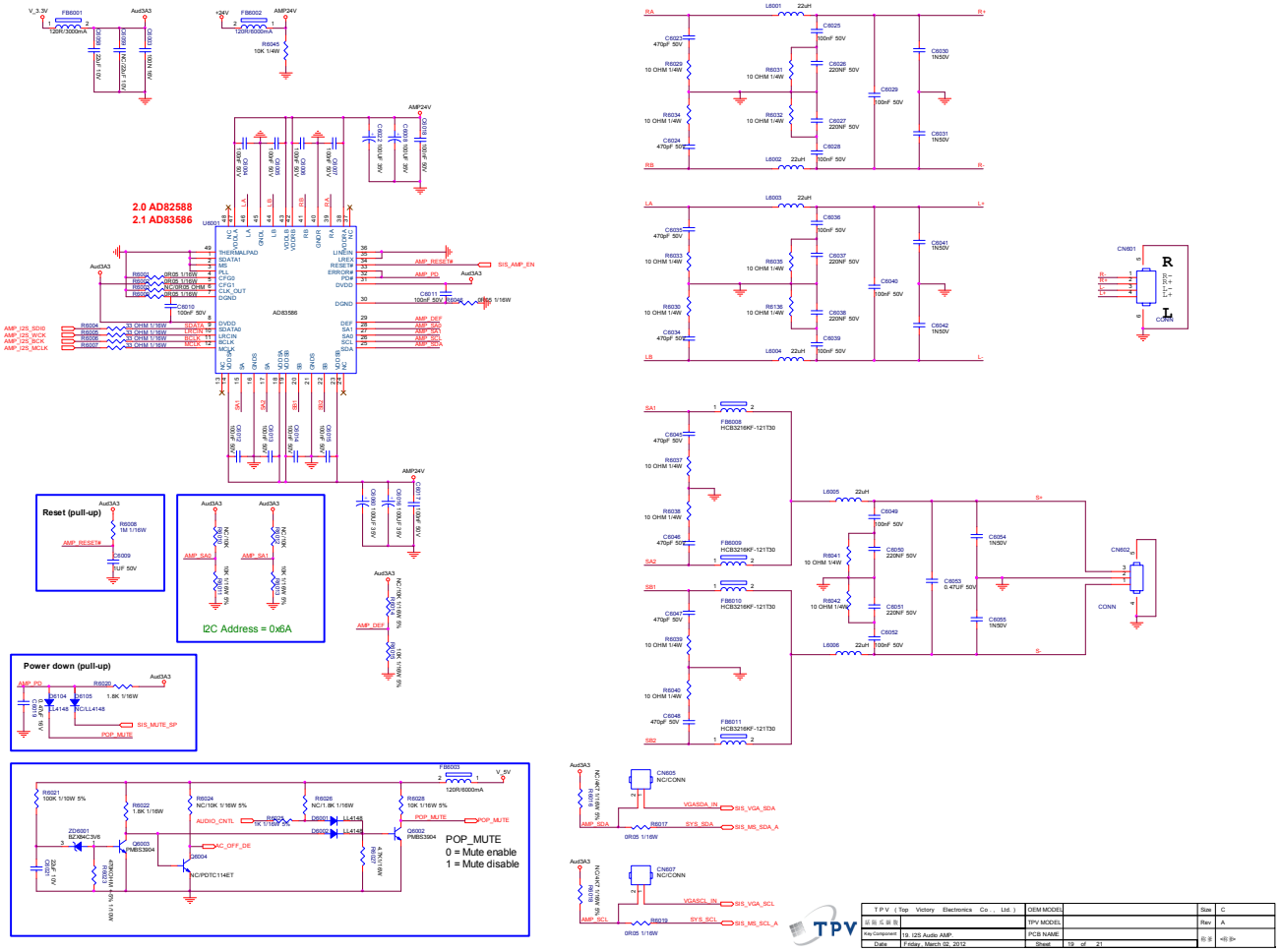

明基電通 BenQ Corporation

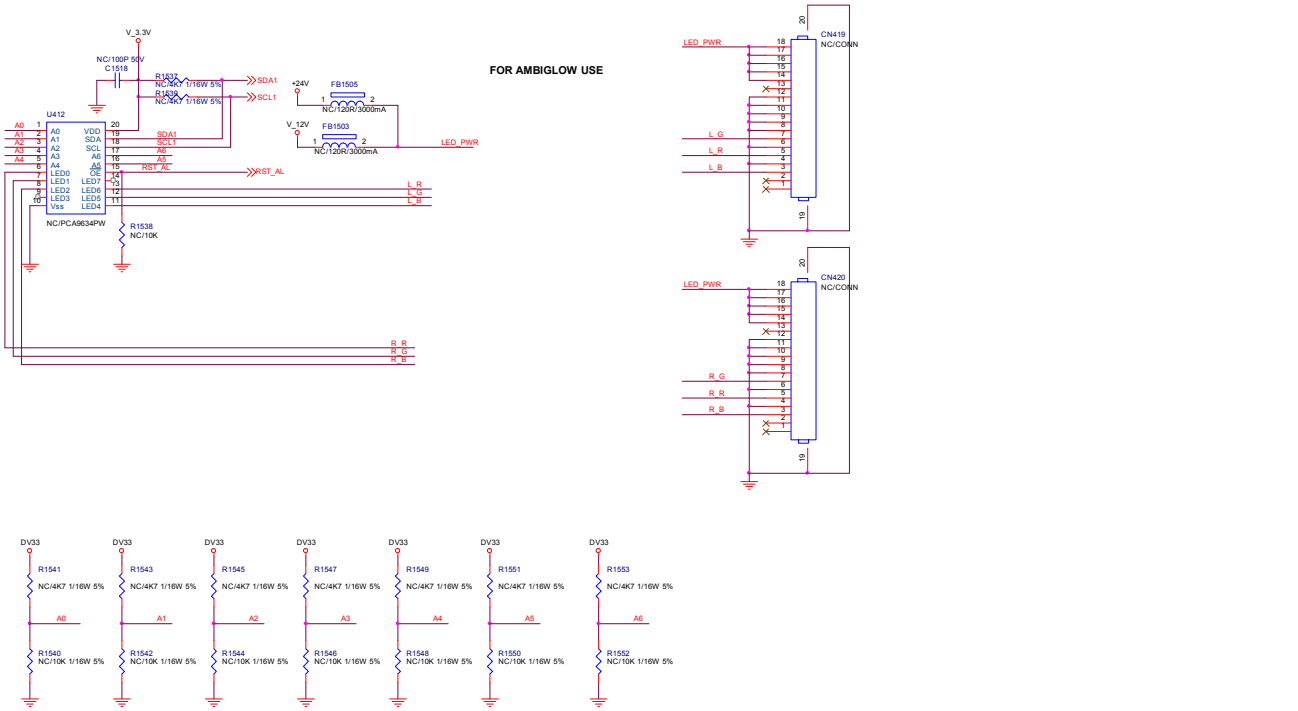

TPV (Top Victory Electronics Co., Ltd.)	OEM MODEL		Size	A3
	TPV MODEL		Rev	A
Key Component 20. Ambiglow & Ambient light	PCB NAME		客案	HW4
Date Thursday, December 08, 2011	Sheet 20 of 21			

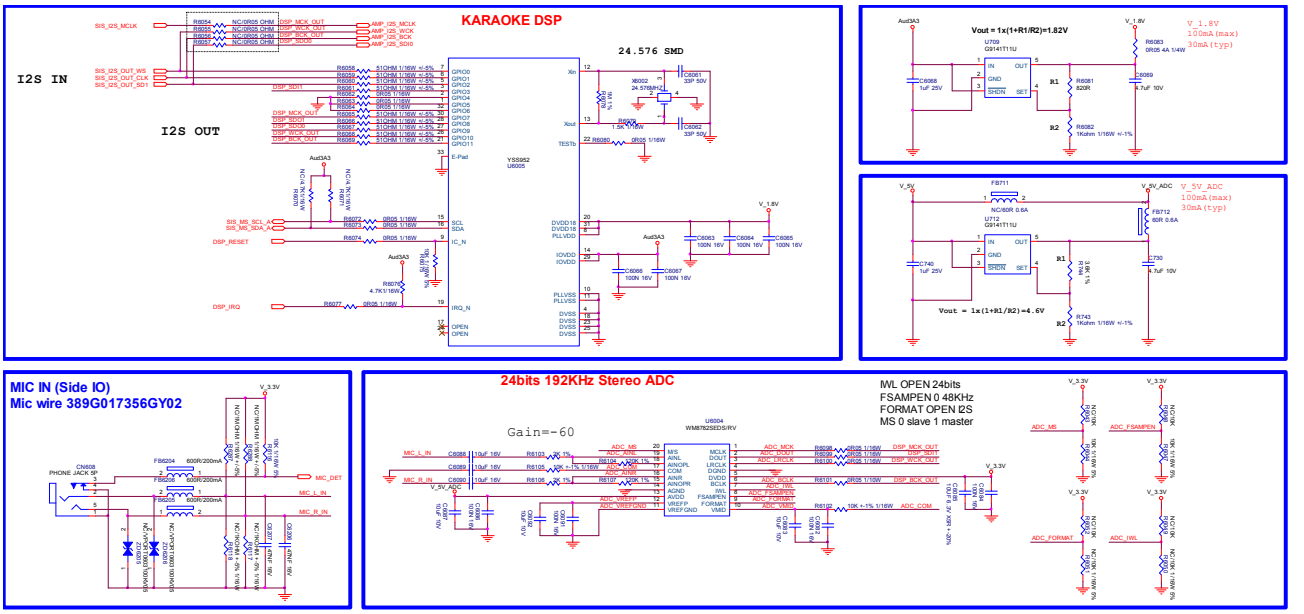

TPV (Top Victory Electronics Co., Ltd.)	OEM MODEL		Size	C
	TPV MODEL		Rev	A
Key Component 21	PCB NAME		客案	HW4
Date Friday, February 24, 2012	Sheet 21 of 21			

明基電通 BenQ Corporation

Power Board

715G5193P03000002M

(For 32RL7500)

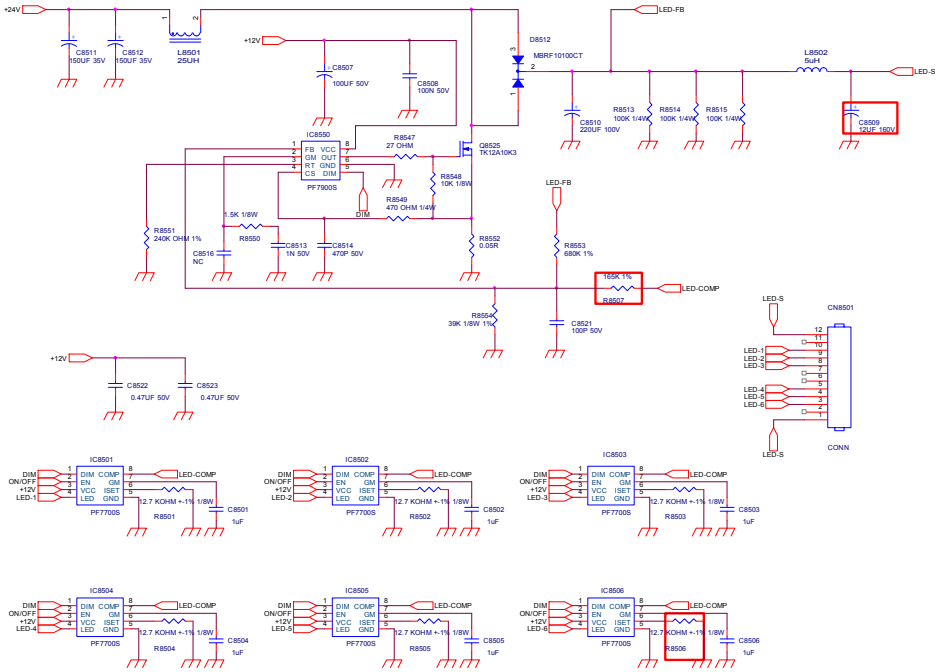

Title	<Title>	
Size A3	Document Number <Doc>	Rev <Rev Code>
Date: Wednesday, August 22, 2012	Sheet 1 of 1	

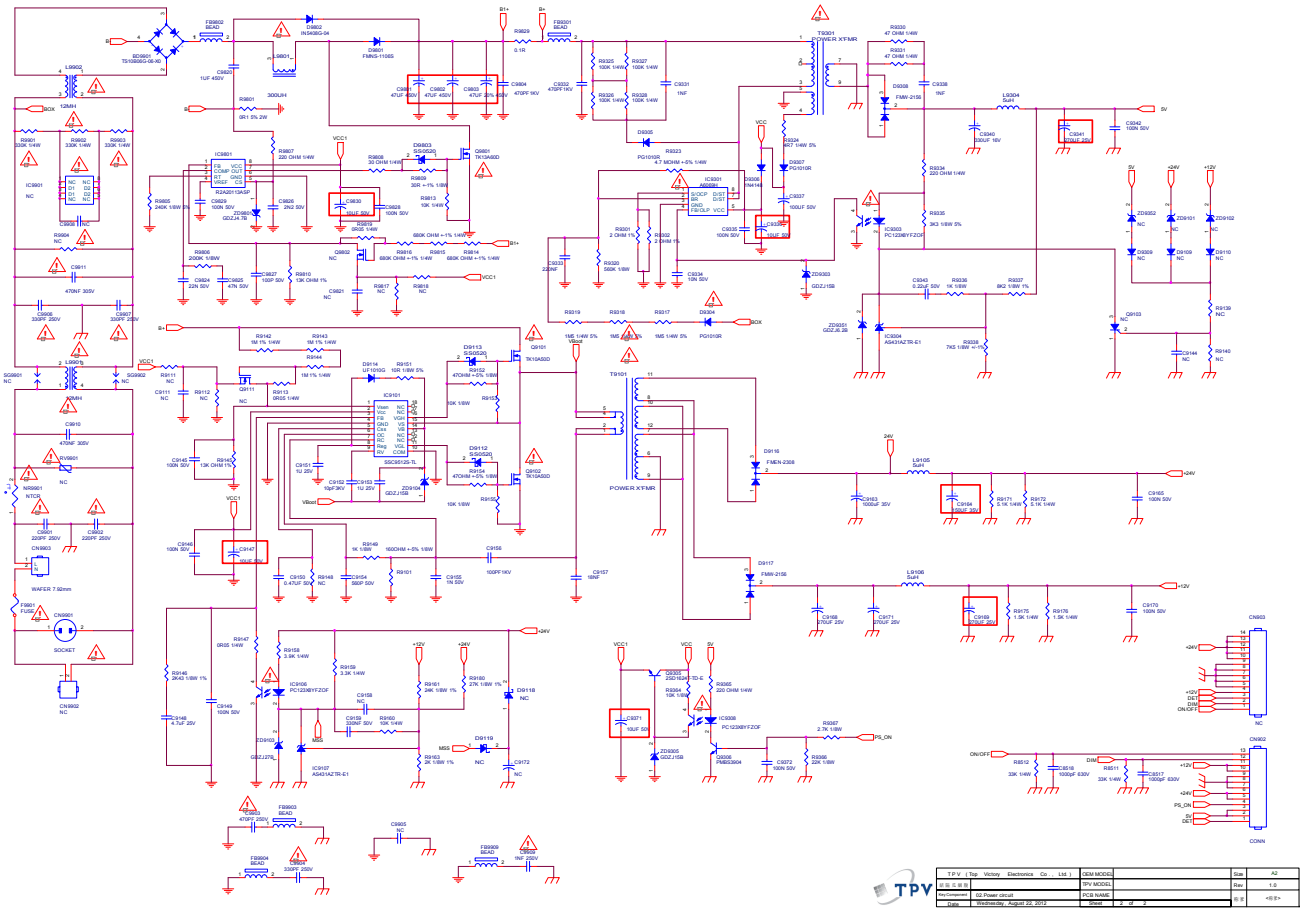

明基電通 BenQ Corporation

Power Board

715G5246P02W21002S

(For 42RL7500)

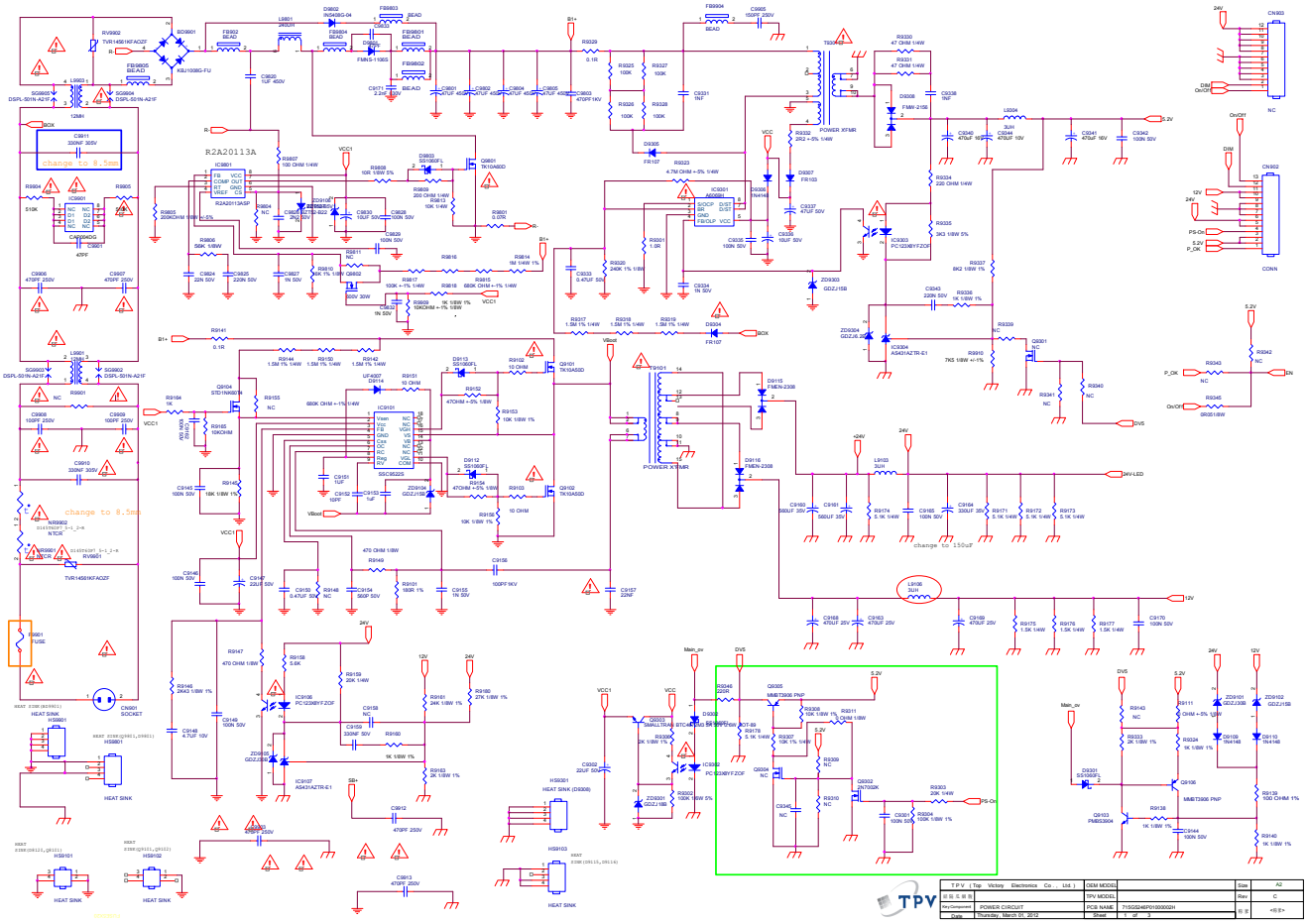

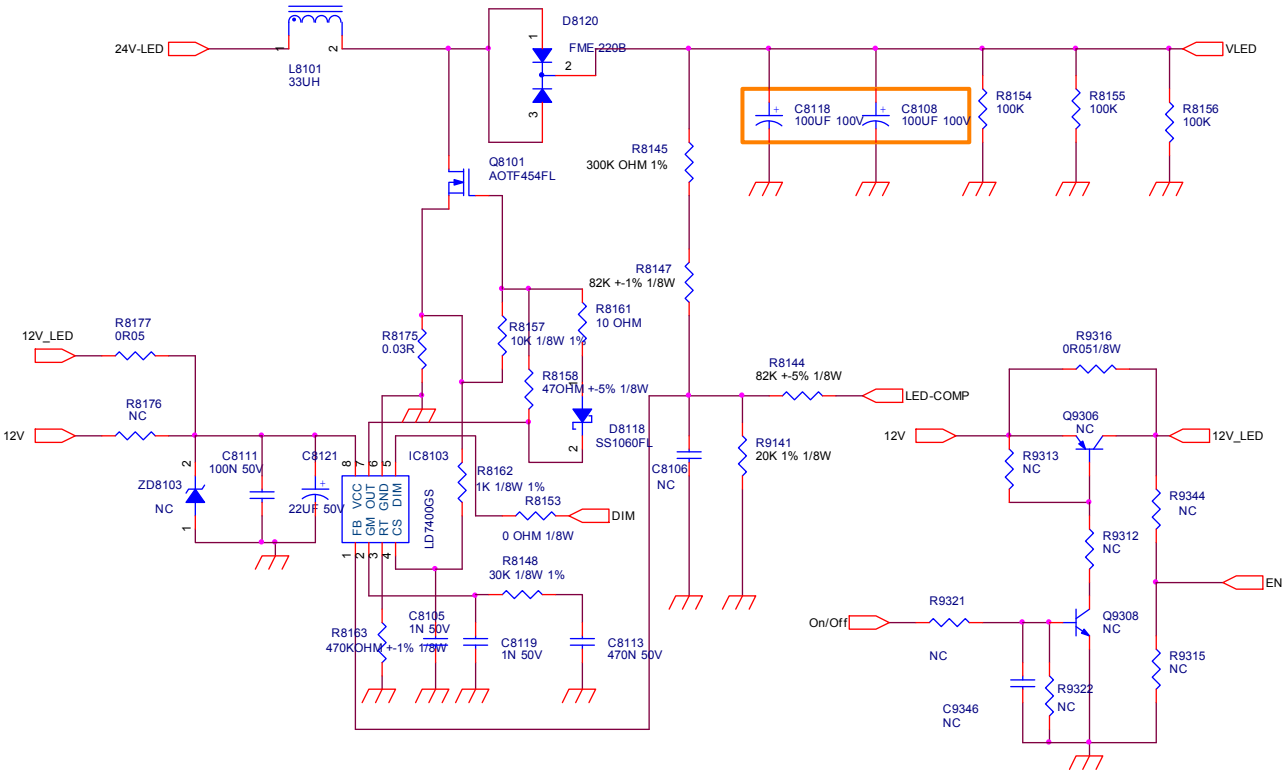

TPV (Top Victory Electronics Co., Ltd.)		OEM MODEL		Size	A
結隔瓜綱腹		TPV MODEL		Rev	C
Key Component	24V to VLED (DC/DC)	PCB NAME	715G5246-P0C-000-0030	称爹	<称爹>
Date	Thursday, March 01, 2012	Sheet	2 of 3		

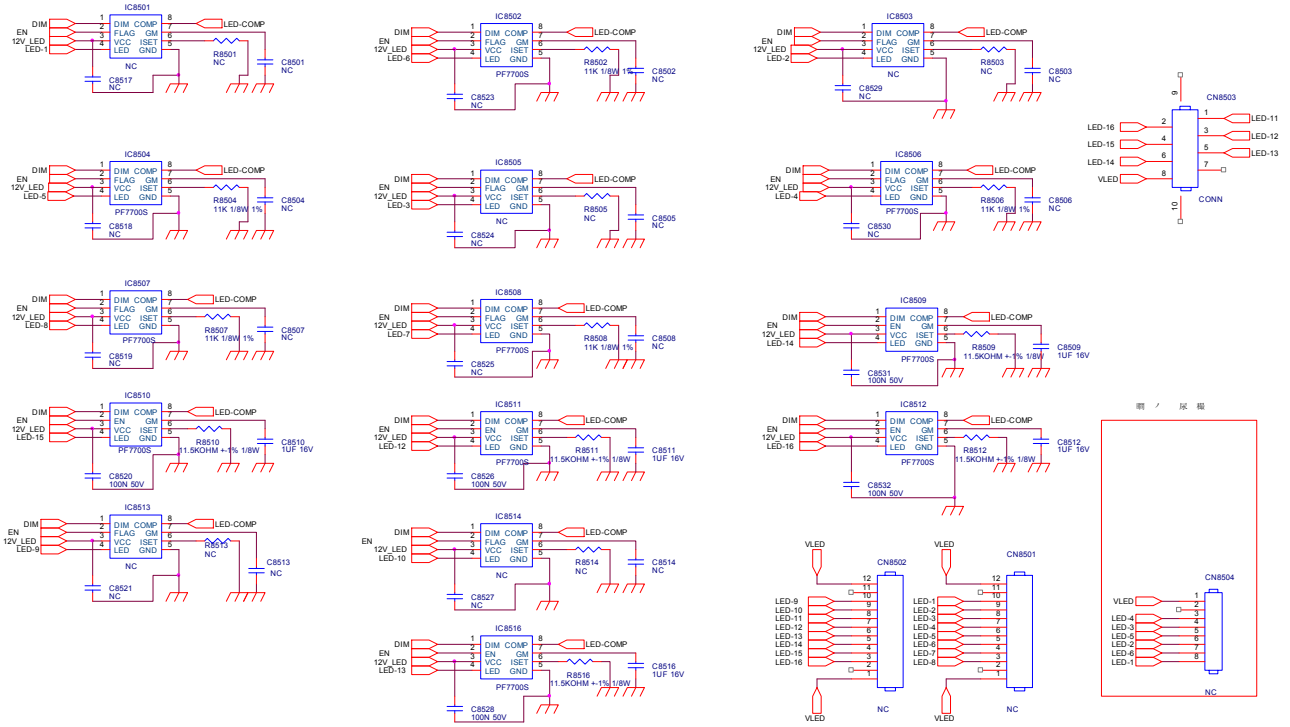

TPV (Top Victory Electronics Co., Ltd.)		OEM MODEL		Size	B
結隔瓜綱腹		TPV MODEL		Rev	C
Key Component	LED Driver	PCB NAME	715G5246-P0C-000-0030	称爹	<称爹>
Date	Thursday, January 05, 2012	Sheet	3 of 3		

明基電通 BenQ Corporation

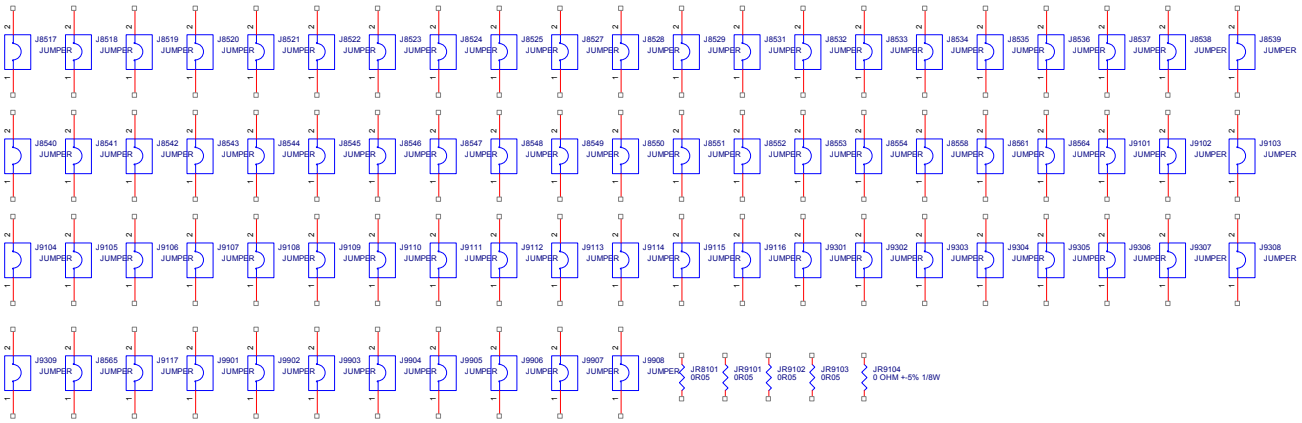

TPV	T P V (Top Victory Electronics Co . . Ltd.)	OEM MODEL		Size	B
	話 筒 瓜 鋼 版	TPV MODEL		Rev	C
	Key Component .LED Driver	PCB NAME	715G5246-P0C-000-0030	称 多	<称多>
	Date Wednesday, December 28, 2011	Sheet	3 of 3		

Key Board

715G5542K01000004S

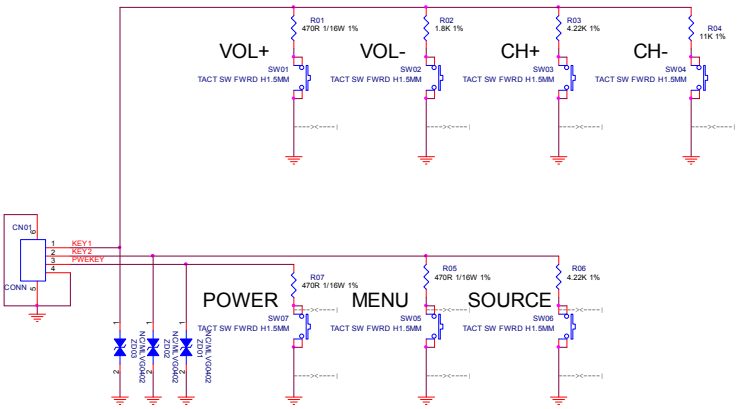

Key Function	Volt.	Range	
POWER	0.35V	0 to 0.66V	
VOL+	0.35V	0 to 0.66V	
VOL-	1.04V	0.66 to 1.32V	
CH+	1.7V	1.32 to 1.98V	
CH-	2.44V	1.98 to 2.64V	
MENU	0.35V	0 to 0.66V	
SOURCE	1.7V	1.32 to 1.98V	
NO funtion	3.3V		

TPV (Top Victory Electronics Co., Ltd.)		OEM MODEL		Size	B
結隔瓜鋼腹		TPV MODEL		Rev	B
Key Component	02-Keypad	PCB NAME	715GXXXX-K0A-000-0040	称爹	<称爹>
Date	Tuesday, December 13, 2011	Sheet	2 of 2		

IR Board

715G5609R01000004Q

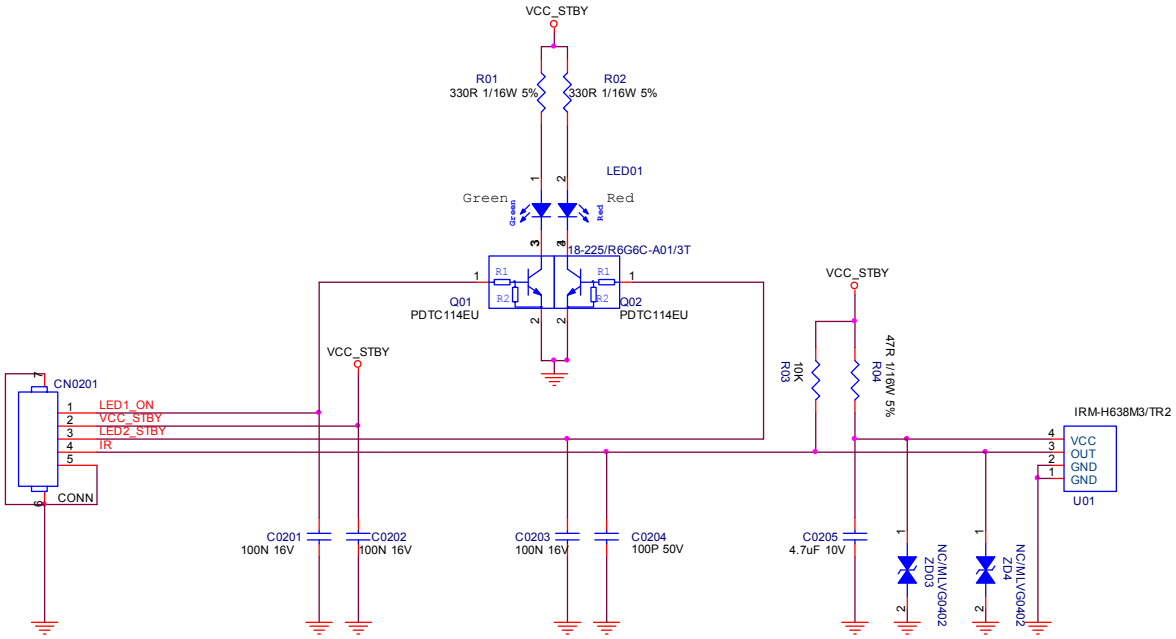

TPV (Top Victory Electronics Co., Ltd.)		OEM MODEL		Size	A
結隔瓜鋼腹		TPV MODEL		Rev	B
Key Component	02. IR BOARD	PCB NAME	715GXXXX-A	称爹	<称爹>
Date	Monday, December 19, 2011	Sheet	2 of 2		

明基電通 BenQ Corporation

PCB Layout

Main board

715G5499M01000005X

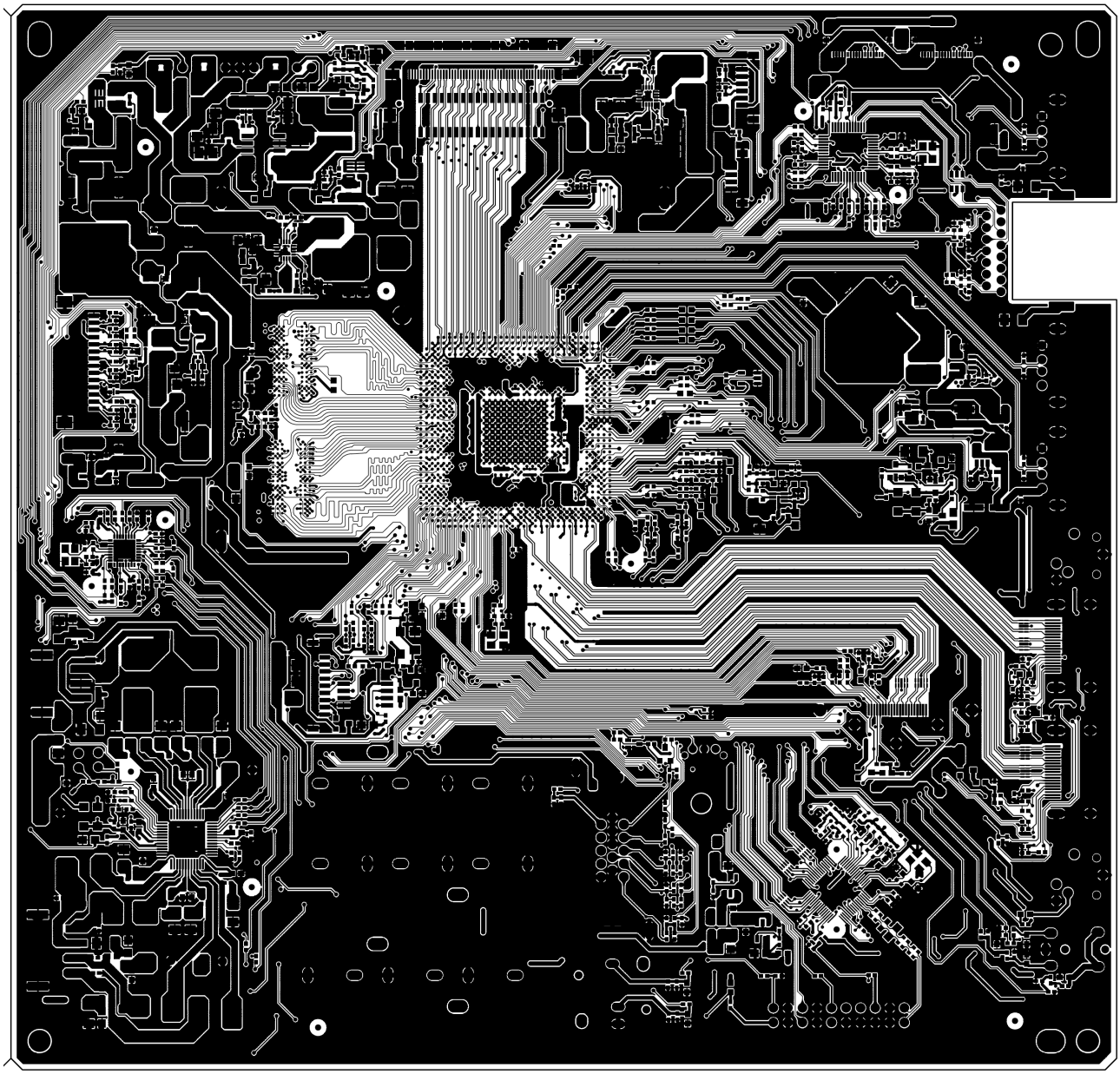

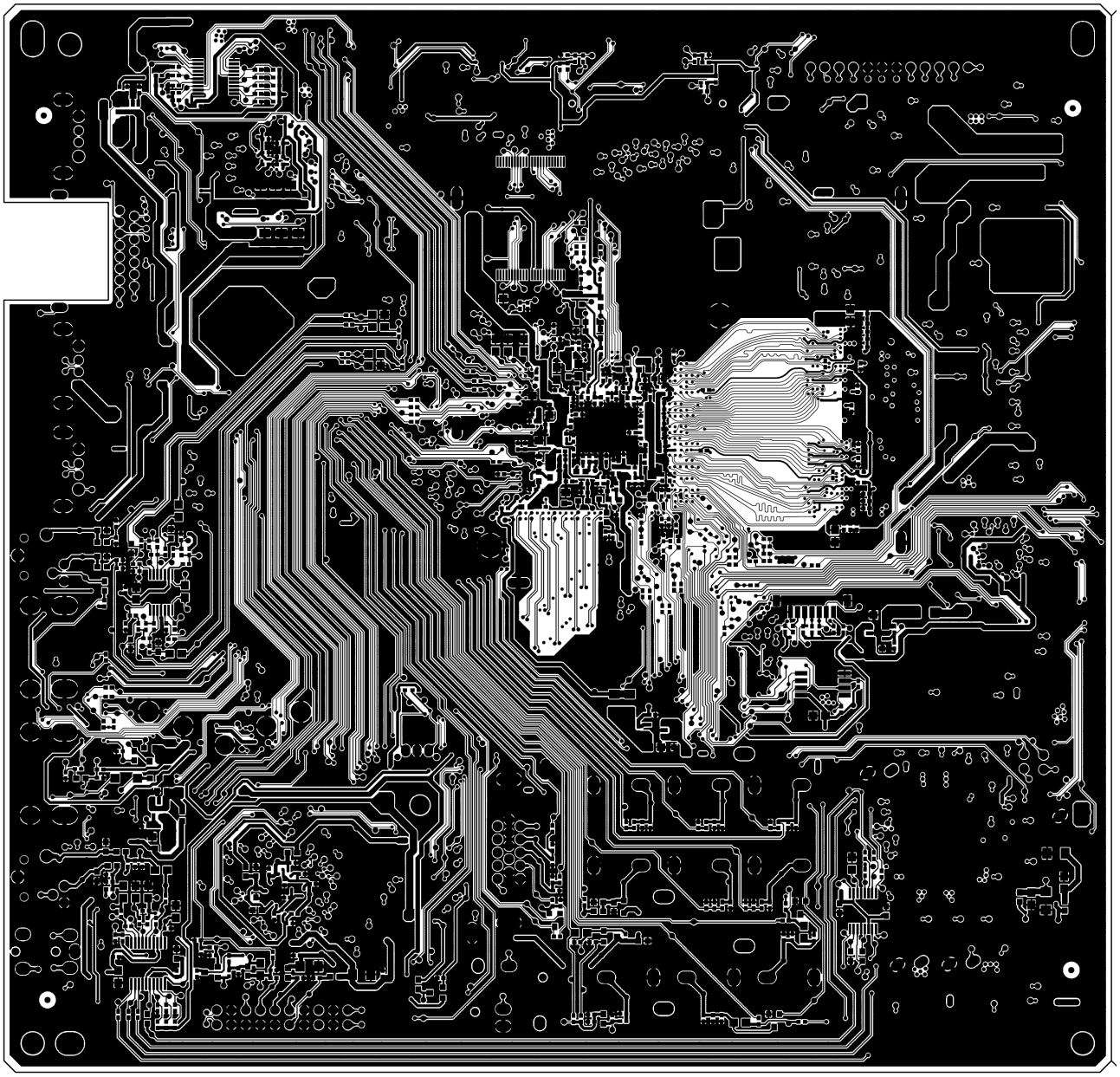

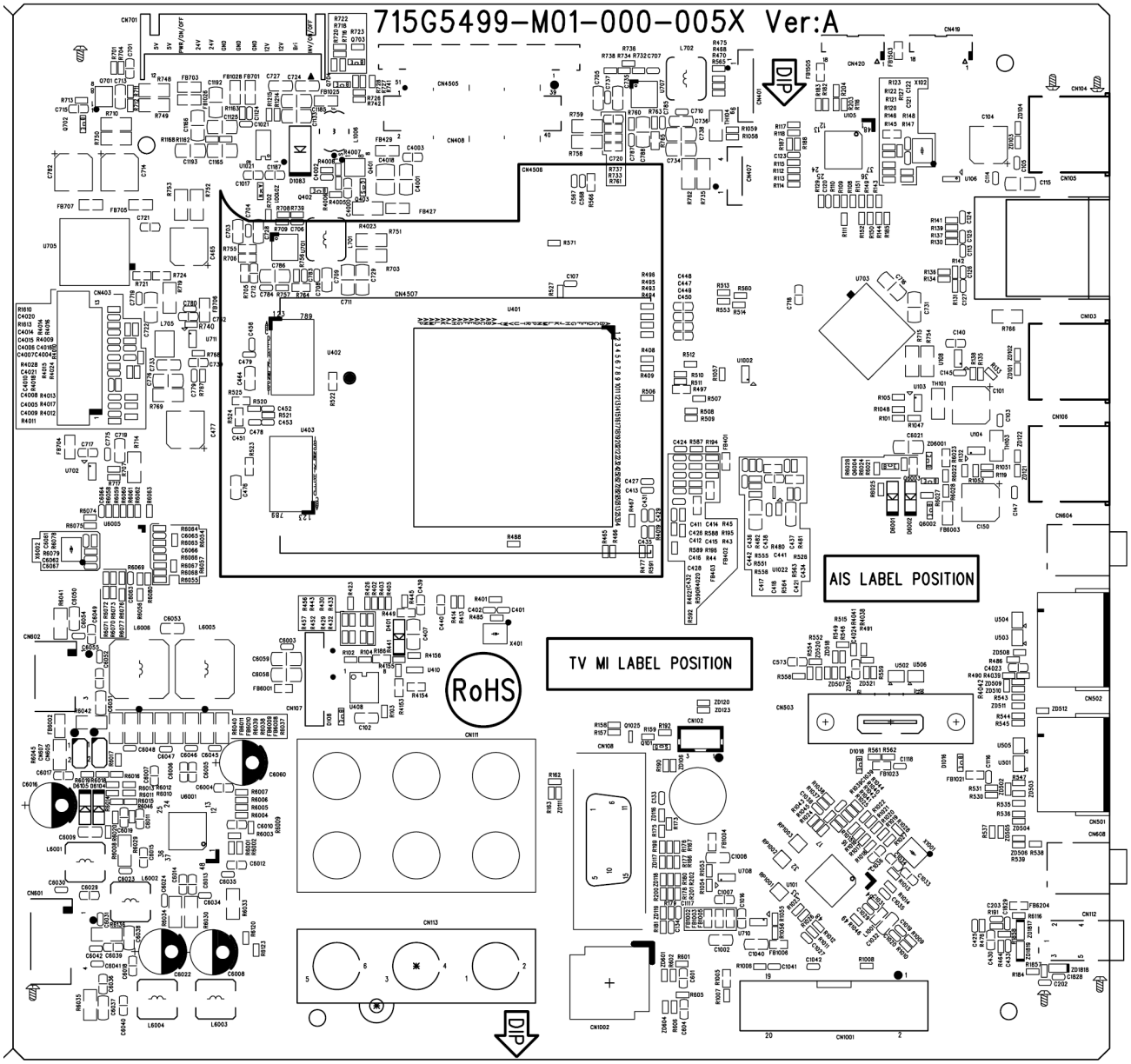
715G5499-M01-000-005X Ver:A
AIS LABEL POSITION
TV MI LABEL POSITION
RoHS
DIP
DIP

Power board

715G5193P03000002M (For 32RL7500)

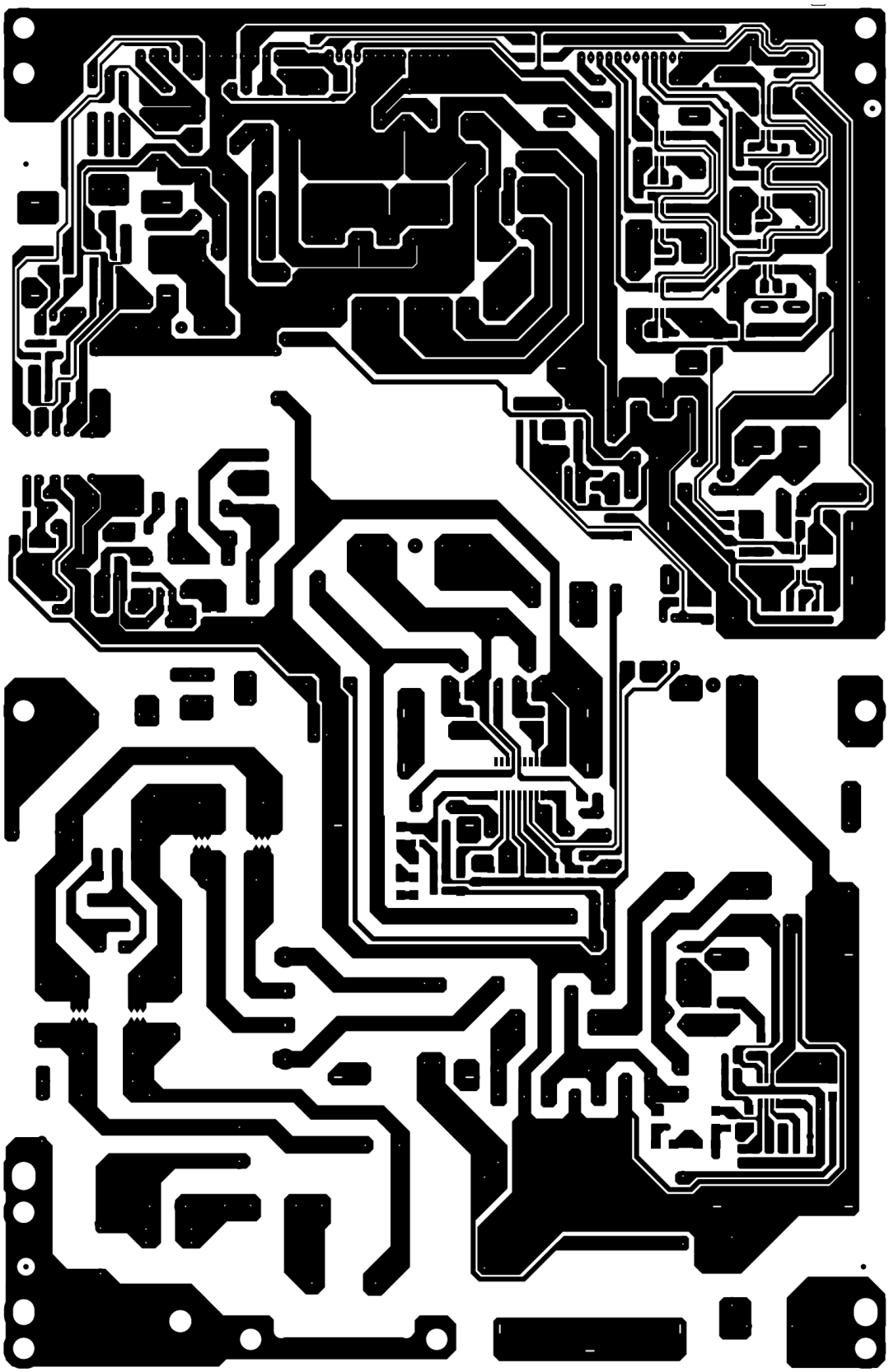

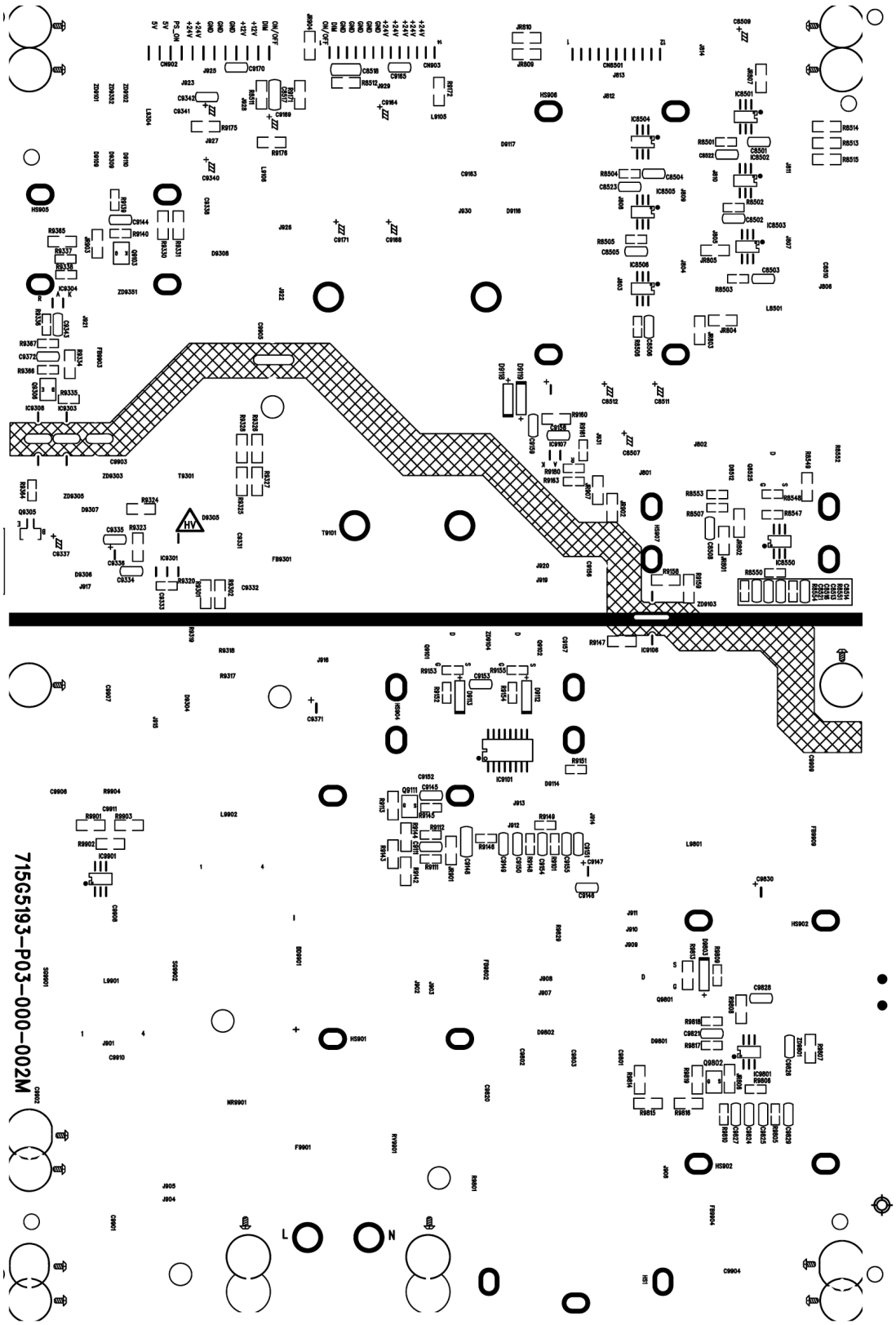
715G5193-P03-000-002M
L
N

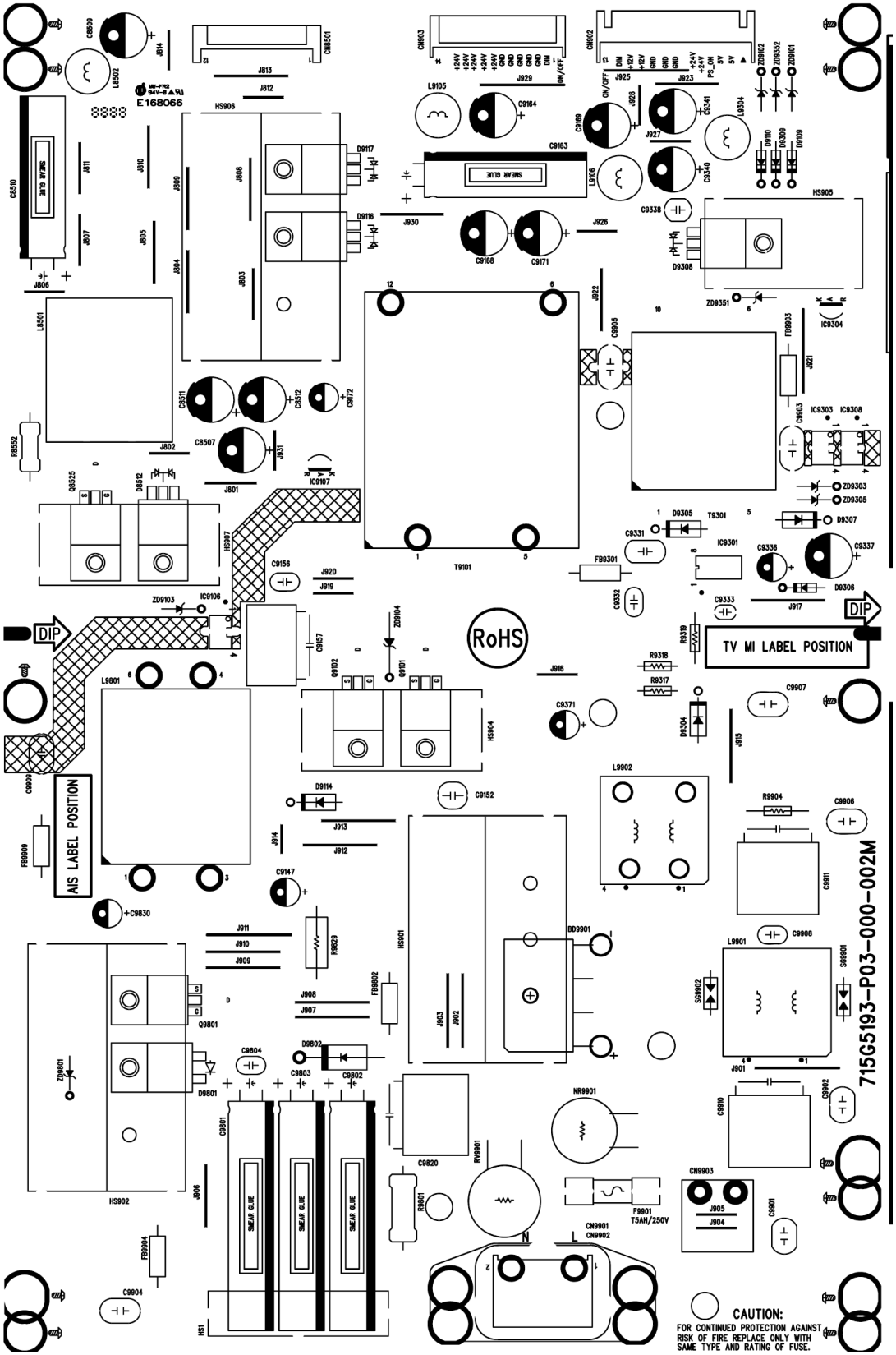
E168066
RoHS
DIP
TV MI LABEL POSITION
AIS LABEL POSITION
715G5193-P03-000-002M
CAUTION:
FOR CONTINUED PROTECTION AGAINST RISK OF FIRE REPLACE ONLY WITH SAME TYPE AND RATING OF FUSE.

715G5246P02W21002S (For 42RL7500)

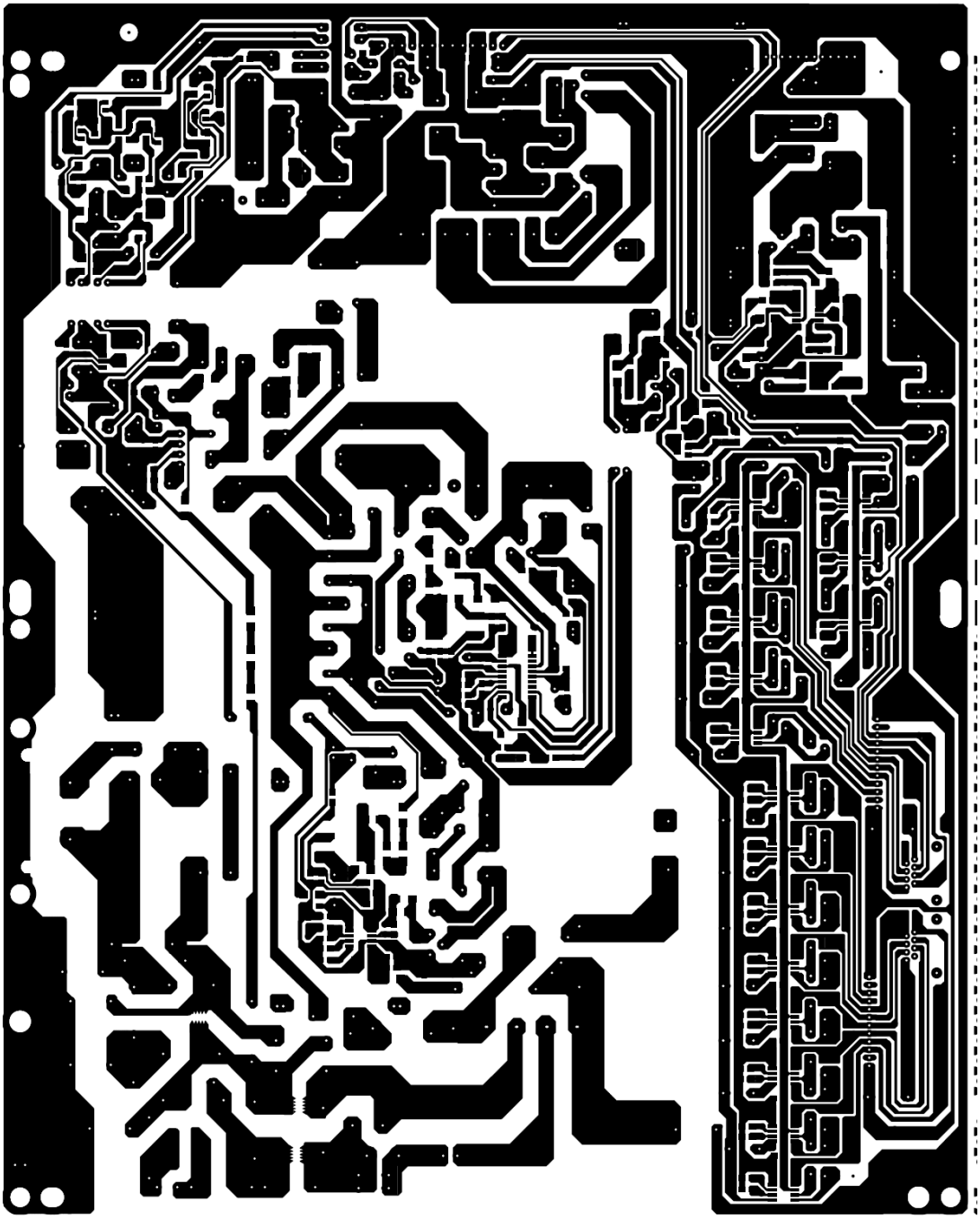

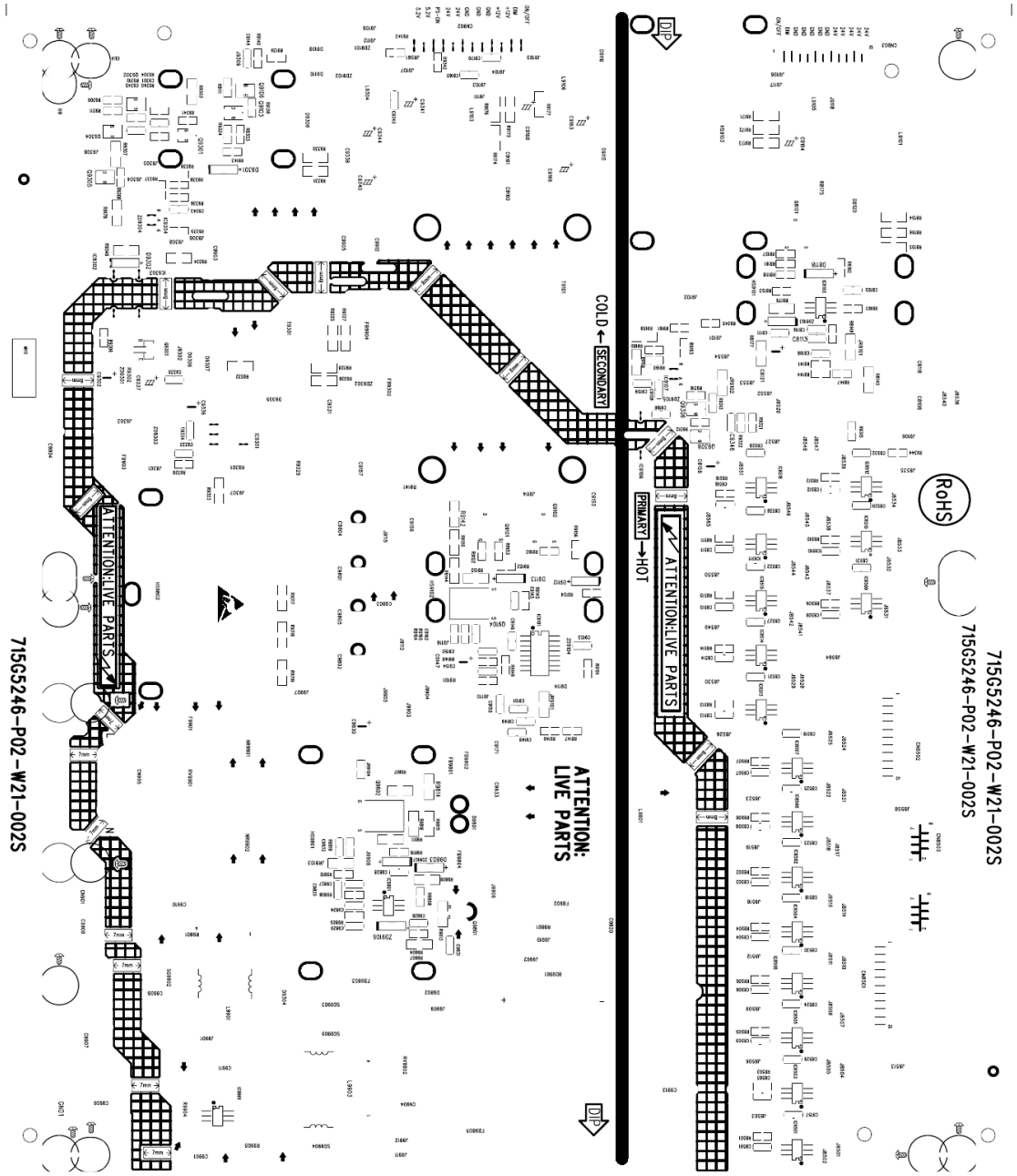
715G5246-P02-W21-002S
ATTENTION:LIVE PARTS
COLD
SECONDARY
PRIMARY
HOT
ATTENTION:
LIVE PARTS
DIP
RoHS
715G5246-P02-W21-002S

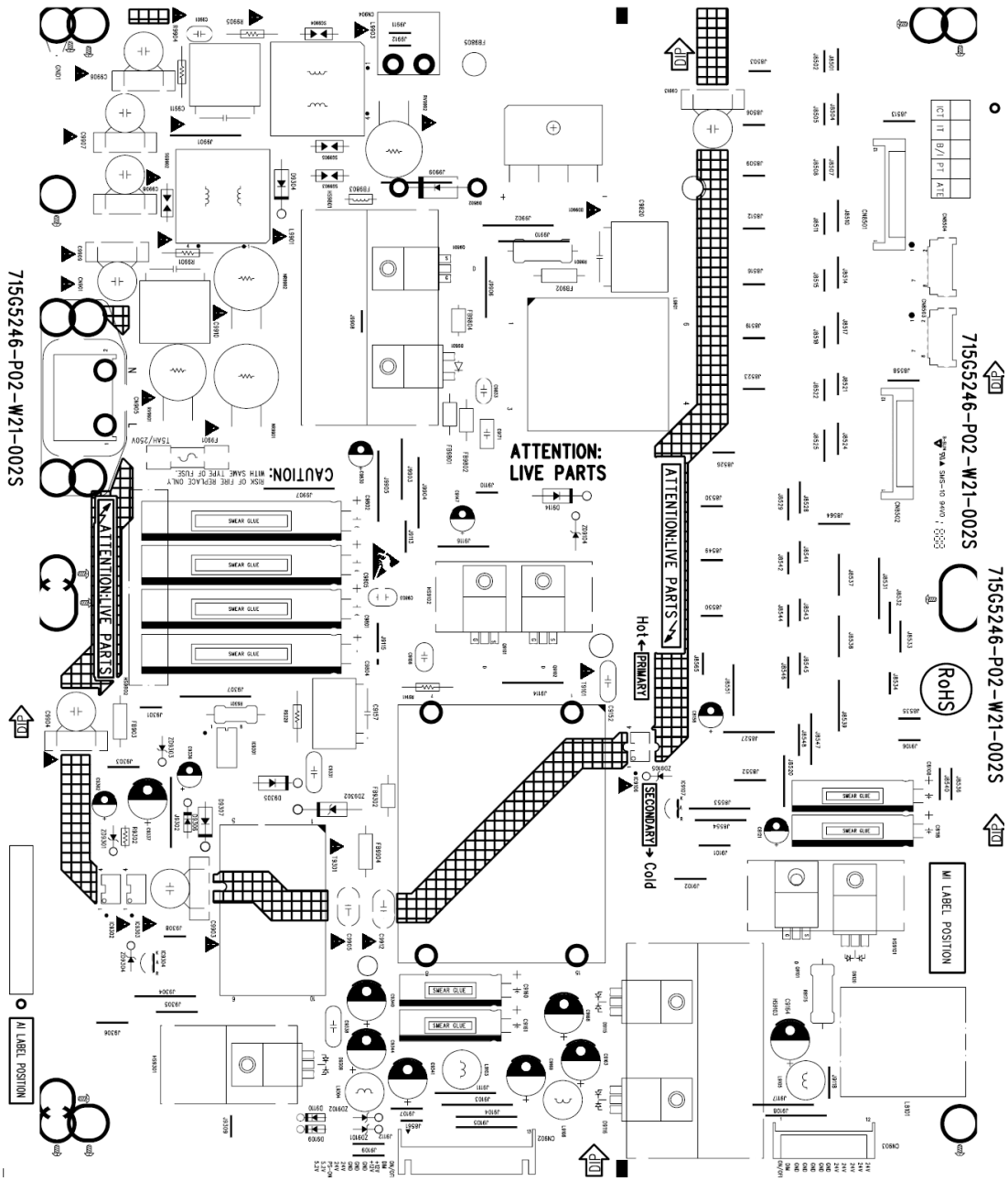
715G5246-P02-W21-002S
ATTENTION: LIVE PARTS
ATTENTION:LIVE PARTS
CAUTION: RISK OF FIRE REPLACE ONLY WITH SAME TYPE OF FUSE
T5AH/250V
SWEAR GLUE
PRIMARY
SECONDARY
Hot
Cold
RoHS
MI LABEL POSITION
AI LABEL POSITION
ICT
IT
B/I
PT
ATE

IR board

715G5609R01000004Q

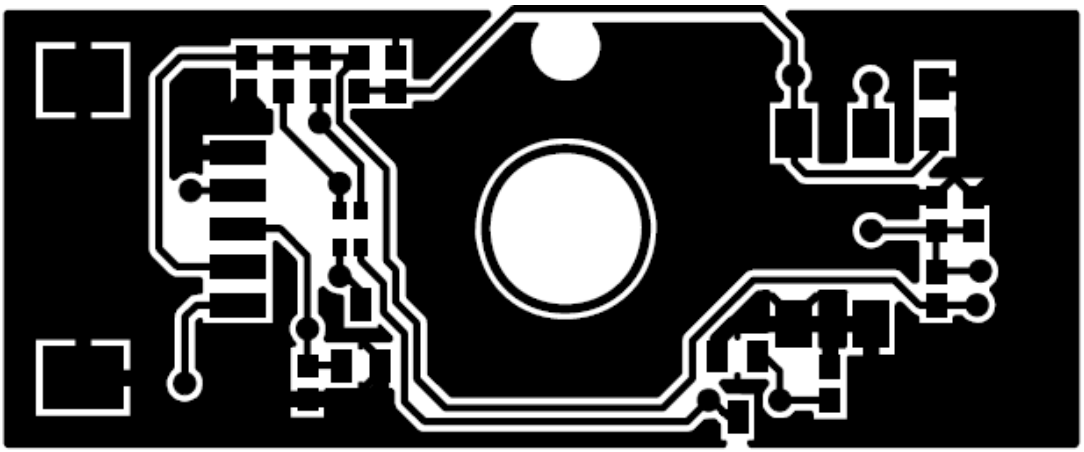

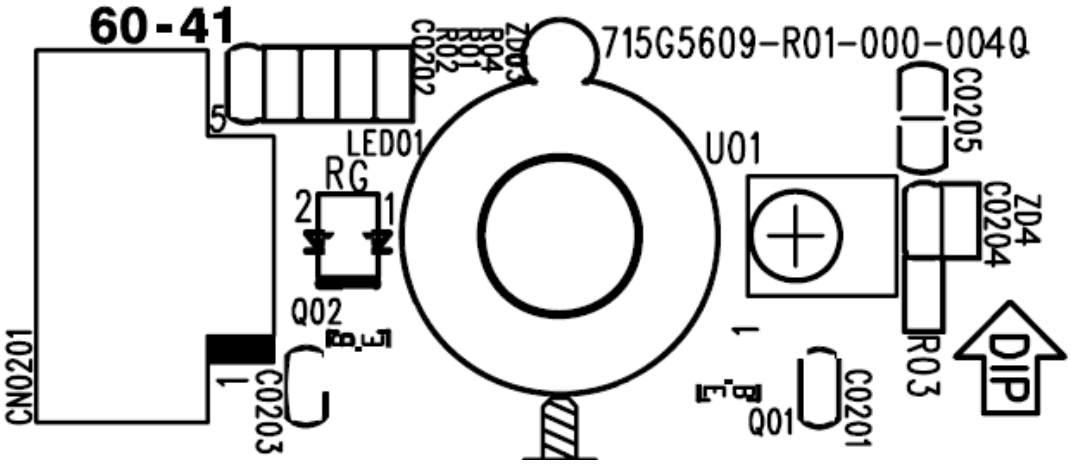

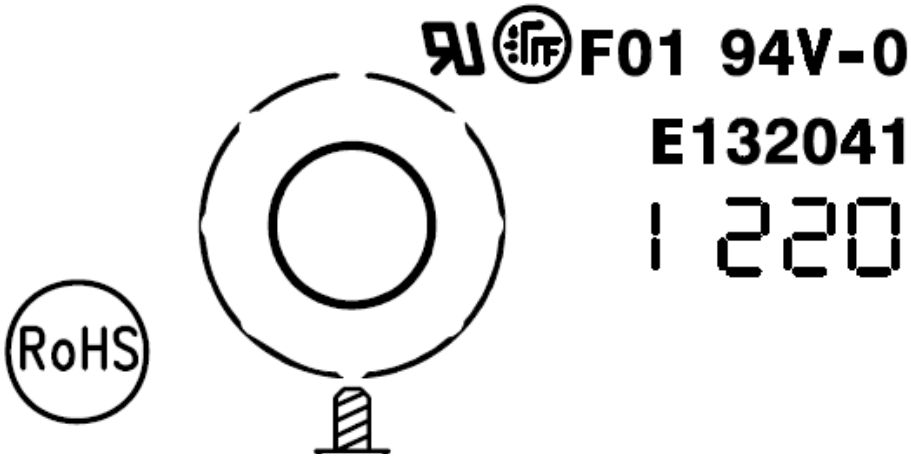

Key Board
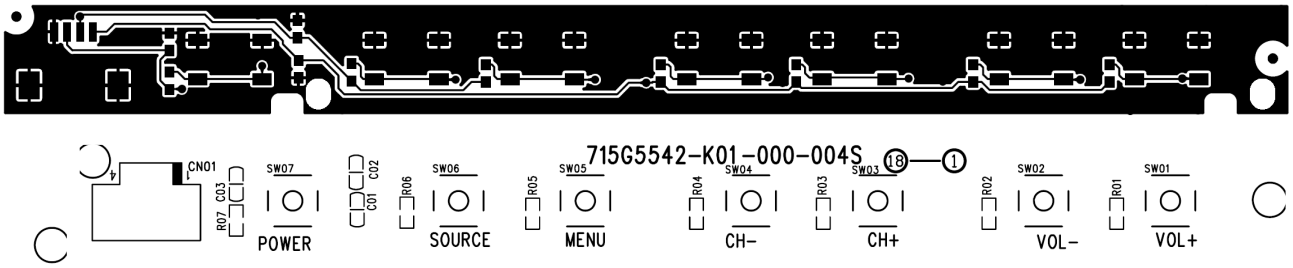
715G5542K01000004S