Liquid Crystal Display Television

Service Manual

Chassis: M-STAR

Product Type: LCD3233EU/LCD2633EU

Ver 1.0

LCD Institute R&D Center

Hisense Electric Co., Ltd.

Jun. 2006

Note: This Specification is subject to change without notice.

Contents

Contents ..... - 2 -
Service Manual ..... - 3 -
1. Product Safety Servicing Guidelines ..... - 3 -
2. Product Function Specifications ..... - 4 -
2-1 LCD3233EU/LCD2633EU Product Function ..... - 4 -
2-2 LCD3233EU/LCD2633EU Specifications ..... - 7 -
3. Lcd Panel Spec ..... - 9 -
3-1 General Description ..... - 9 -
3-2 General Features ..... - 11 -
4. Block Diagram ..... - 12 -
4-1 Chassis Block Diagram ..... - 12 -
4-2 Video Processing Part ..... - 15 -
4-3 Audio Processing Part ..... - 16 -
4-4 I2C Controlling Part ..... - 16 -
4-5 Power Part ..... - 17 -
5. Service Mode And Adjustment ..... - 17 -
5-1 Service Mode ..... - 17 -
6. Software Updating ..... - 21 -
6-1、Updating Cable ..... - 21 -
6-2、LCD3233EU/LCD2633EU Software Updating Operation ..... - 21 -
7. LCD3233EU/LCD2633EU Explode View And Bom ..... - 29 -
8. Spare Parts List ..... - 32 -
9. Troubleshooting ..... - 32 -
10. Ciruit Diagram ..... - 32 -

©Copyright LCD Institute R&D Center Hisense Electric Co., Ltd.,
Jun, 2006 All Rights Reserved.
No Reproduction and Redistribution Allowed!

Service Manual

1. Product Safety Servicing Guidelines

WARNING:

Service should not be attempted by anyone unfamiliar with the necessary precaution on this receiver.The following are the necessary precaution to be observed before serving this chassis.

1.Since the power supply circuit of this receiver is directly connected to the AC power line ,an Isolation transformer should be used during any dynamic service to avoid possible shock hazard.

2.When replacing a chassis in the cabinet, always be certain that all the protective devices are put back in place, such as : non-metallic control knobs, insulating cover,shields,isolation resistor-capacitor network etc.

3.When replacing parts or circuit boards, disconnect the power cord.

4.When replacing a high wattage resistor (oxide metal film resistor) on the circuit board, keep the resistor(1/2in) away from circuit board.

6.Connection wires must be kept away from components with high voltage or high temperature.

7.If any fuse in this LCD TV receiver is blown , replace it with the FUSE specified in the chassis part list.

The lightning flash with arrowhead symbol, within an equilateral triangle is intended to alert the user to the

presence of uninsulated dangerous voltage within the products enclosure that may be of sufficient magnitude to constitute a risk of electric shock.

The exclamation point within an equilateral triangle is intended to alert the user to the presence of important operating and maintenance(servicing) instructions in the literature accompanying the set.

Many electrical and mechanical parts in the chassis have special safety-related characteristics.These characteristics are often passed unnoticed by a visual inspe-ction.When replacement parts are required , be sure the service technician uses replacement parts specified by us that have the same characteristics as the original part. Unauthorized substitutions may result in fire , electric shock , injury to persons or other hazards.This LCD TV product should be situated away from heat source such as radiation,stoves,or other product that produce heat.

2. Product Function Specifications

2-1 LCD3233EU/LCD2633EU Product Function

Front Controls

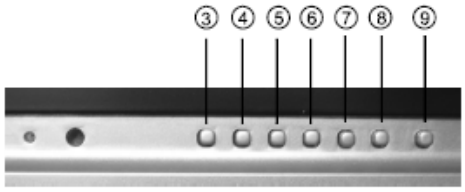

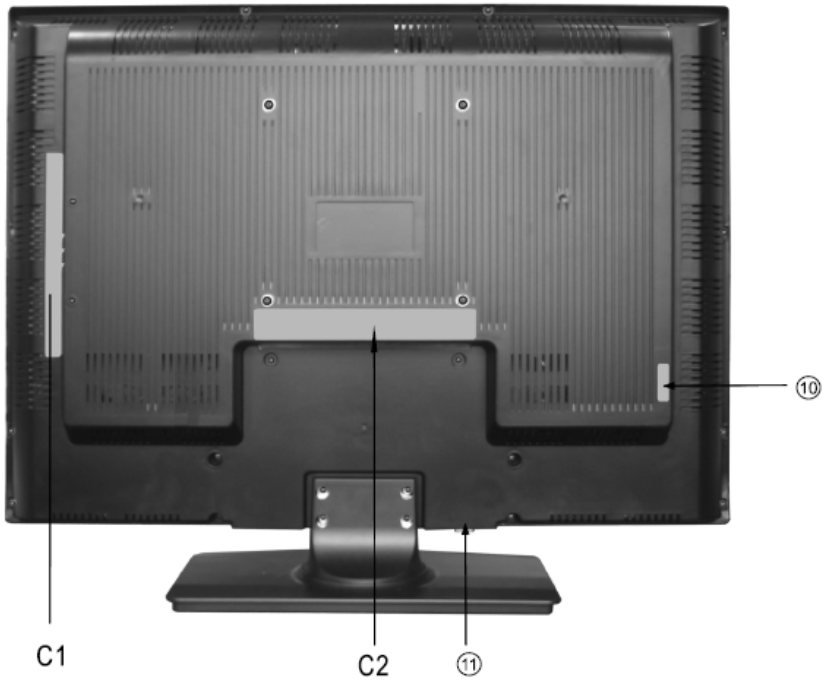

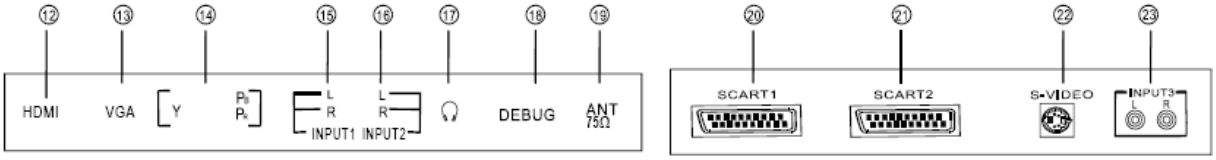

① Power indicator
② IR Sensor
③ Menu button
④ Source select
⑤ Volume down/cursor left
⑥ Volume up/cursor right
⑦ Channel down/cursor down
⑧ Channel up/cursor up
⑨ Power button (standby)
⑩ AC Power Socket
⑪ Power Switch (ON/OFF)
⑫ HDMI input
⑬ VGA input
⑭ YPbPr input
⑮ Audio Input 1(VGA)
⑯ Audio Input 2(YPbPr)
⑰ Headphone Output
⑱ DEBUG
⑲ Antenna input
⑳ Scart 1 Connector
㉑ Scart 2 Connector
㉒ S-VIDEO Input
㉓ Audio Input 3(S-VIDEO)

Note: The above figures are for reference only, please refer to the units.

- Multimedia - TV receiver, Video monitor and PC display, all in one.
- Wider viewing angle, 16:9 display - 176° viewing angle.
- Digital display device - truthfully reproducing the images, without

distortion or blurring, irrespective of magnetic or geomagnetic effect.

- 200 channels memory
- Sleep timer
- Teletext with 252 pages memory
- Stereo
- Dual SCART interface
- Multi-language OSD

2-2 LCD3233EU/LCD2633EU Specifications

Specifications

Screen Size:	32-inch (81 cm) TFT LCD TV
Native Resolution:	1366 x 768 Pixels (corresponding to WXGA)
Colour System:	PAL/SECAM
Sound System:	B/G, D/K, I, L/L'
Tuner:	VHF/UHF: 48.25~863.25MHz
Antenna:	75Ω VHF/UHF input
Stereo:	NICAM/A2
VIDEO INPUT:	
SCART-1 (Video and RGB)	Video: 1 Vp-p, negative sync, 75Ω input RGB: 0.7 Vp-p, 75Ω input
SCART-2 (Video)	Video: 1 Vp-p, negative sync, 75Ω input
Audio in	Stereo audio input for SCART1 and SCART2
COMPONENT	RCA, 0.7 Vp-p/75Ω input (480I/60Hz, 480P/60Hz, 576I/50Hz, 576P/50Hz, 720P/60Hz, 1080I/50Hz, 1080I/60Hz)
Audio in	RCA Stereo audio input
PC INPUT:	
VGA	15 Pin , Analog RGB signal, 0.7Vp-p, 75Ω input (VGA, SVGA, XGA)
Audio in	RCA Stereo audio input
MONITOR OUT	
Speaker Output	8W+8W
Power Requirement	AC 160 to 240V, 50/60Hz
Power Consumption	165W
Dimensions(mm)	813.2 (L) x240 (D) x 642 (H)
Weight (gross)	20.2kg

Allowable temperature of operation environment
.....0°C to 40°C

ACCESSORIES	
Operating Instructions	1
Remote Control Unit	1
Power Lead	1
Dry Cell Battery	2

Note: Specifications and design are subject to possible modifications without notice due to improvements.

The HDMI interface (High Definition Multimedia Interface)

What is HDMI?

HDMI, is a next-generation interface that enables the transmission of digital audiovisual signals using a single cable without compression, and embeded the HDCP feature. The HDMI interface is provided for transmitting digital television audiovisual signals from DVD players, set-top boxes and other audiovisual sources to television sets, projections and other video displays. The HDMI interface is optimized for next High Definition content.

HDCP (High bandwitch Digital Content Protection sytem)

HDCP, is designed for protecting Audiovisual content over certain high-bandwidth interfaces, referred to as HDCP-protected interfaces, from being copied.

Specifications

Screen Size:	26-inch (66 cm) TFT LCD TV
Native Resolution:	1366 x 768 Pixels (corresponding to WXGA)
Colour System:	PAL/SECAM
Sound System:	B/G, D/K, I, L/L'
Tuner:	VHF/UHF: 48.25~863.25MHz
Antenna:	75Ω VHF/UHF input
Stereo:	NICAM/A2
VIDEO INPUT:	
SCART-1 (Video and RGB)	Video: 1 Vp-p, negative sync, 75Ω input RGB: 0.7 Vp-p, 75Ω input
SCART-2 (Video)	Video: 1 Vp-p, negative sync, 75Ω input
Audio in	Stereo audio input for SCART1 and SCART2
COMPONENT	RCA, 0.7 Vp-p/75Ω input (480I/60Hz, 480P/60Hz, 576I/50Hz, 576P/50Hz, 720P/60Hz, 1080I/50Hz, 1080I/60Hz)
Audio in	RCA Stereo audio input
PC INPUT:	
VGA	15 Pin , Analog RGB signal, 0.7Vp-p, 75Ω input (VGA, SVGA, XGA)
Audio in	RCA Stereo audio input
MONITOR OUT	
Speaker Output	6W+6W
Power Requirement	AC 100 to 240V 50/60Hz
Power Consumption	140W
Dimensions(mm)	676(L)x208(D)x544(H)
Weight (gross)	16kg

Allowable temperature of operation environment
.....0°C to 40°C

ACCESSORIES	
Operating Instructions	1
Remote Control Unit	1
Power Lead	1
Dry Cell Battery	2

Note: Specifications and design are subject to possible modifications without notice due to improvements.

3. Lcd Panel Spec

3-1 General Description

LCD3233EU' S Lcd Panel is a 32" TFT Liquid Crystal Display module with 16-CCFL Backlight unit and 1ch-LVDS interface. This module supports 1366 x 768 WXGA format and can display true 16.7M colors (8-bit colors).

The inverter module for backlight is built-in.

FEATURES

- High brightness (400 nits)
- Ultra-high contrast ratio (1200:1)
- Faster response time (gray to gray average 6.5ms)
- High color saturation NTSC 75%
- Ultra wide viewing angle : 176(H)/176(V) (CR>20) with Super MVA technology
- DE (Data Enable) only mode
- LVDS (Low Voltage Differential Signaling) interface
- 180 degree rotation display (option)
- Color reproduction (nature color)

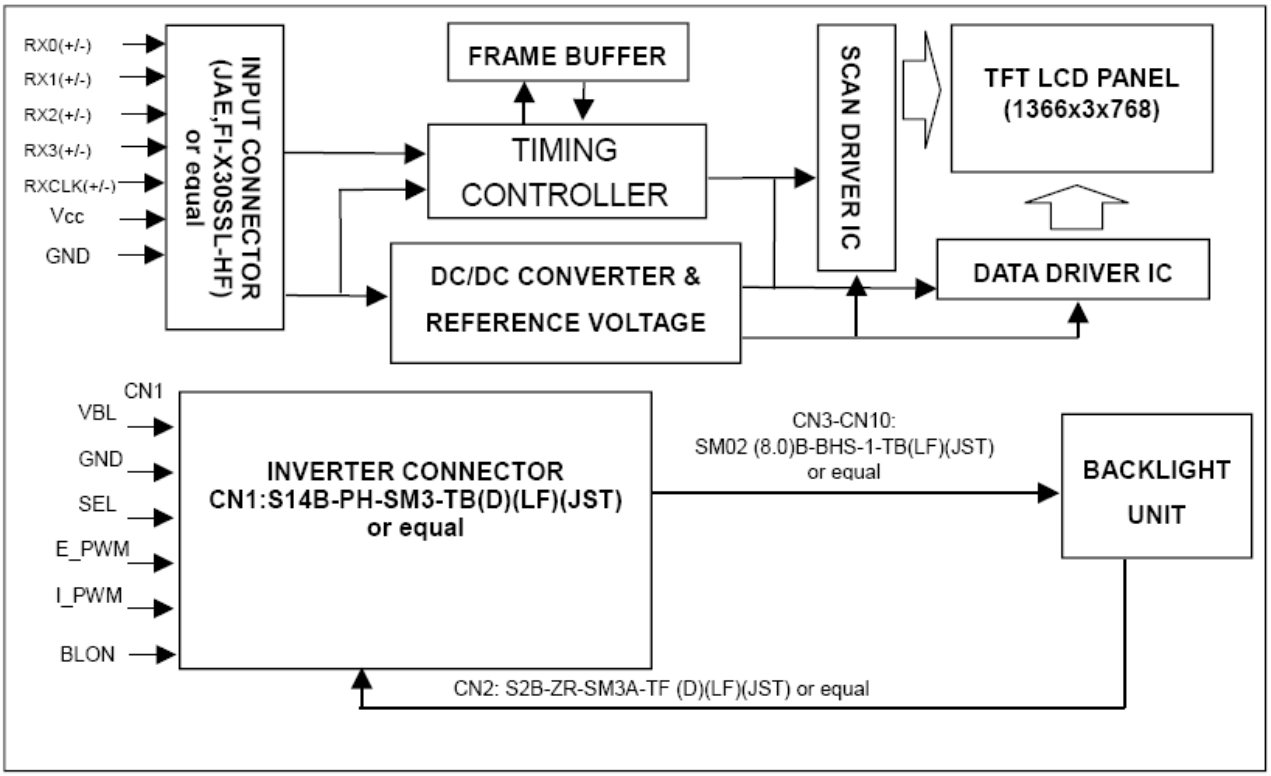

LCD2633EU’S Lcd Panel is a 26.0 inch Color TFT-LCD Module T260XW02. This LCD module has a TFT active matrix type liquid crystal panel 1366x768 pixels, and diagonal size of 26.0 inch. This module supports 1366x768 XGA-WIDE mode (Non-interlace).

Each pixel is divided into Red, Green and Blue sub-pixels or dots which are arranged in vertical stripes. Gray scale or the brightness of the sub-pixel color is determined with a 8-bit gray scale signal for each dot.

The T260XW02 has been designed to apply the 8-bit 1 channel LVDS interface method. It is intended to support displays where high brightness, wide viewing angle, high color saturation, and high color depth are very important.

3-2 General Features

Item	Specification	Unit	Note
Active Area	708.954(H) x 398.592 (V) (32.02” diagonal)	mm	(1)
Bezel Opening Area	714.96 (H) x 404.6 (V)	mm	
Driver Element	a-si TFT active matrix	-	
Pixel Number	1366 x R.G.B. x 768	pixel	
Pixel Pitch (Sub Pixel)	0.1730 (H) x 0.5190 (V)	mm	
Pixel Arrangement	RGB vertical stripe	-	
Display Colors	16.7M	color	
Display Operation Mode	Transmissive mode / Normally black	-	
Surface Treatment	Anti-Glare coating (Haze 25%),Hard coating (3H)	-	

Items	Specification	Unit	Note
Active Screen Size	26.0	inches	
Display Area	575.769 (H) x 323.712(V)	mm	
Pixel Pitch	0.4215	mm	
Outline Dimension	626.0 (H) x 373.0 (V) x 47.5(D)	mm	With inverter
Driver Element	a-Si TFT active matrix		
Display Colors	16.7M	Colors	
Number of Pixels	1366 x 768	Pixel	
Pixel Arrangement	RGB vertical stripe		
Display Mode	Normally Black		
BL Structure	8 U-Lamps		
Surface Treatment	AG, 3H		

4. Block Diagram

4-1 Chassis Block Diagram

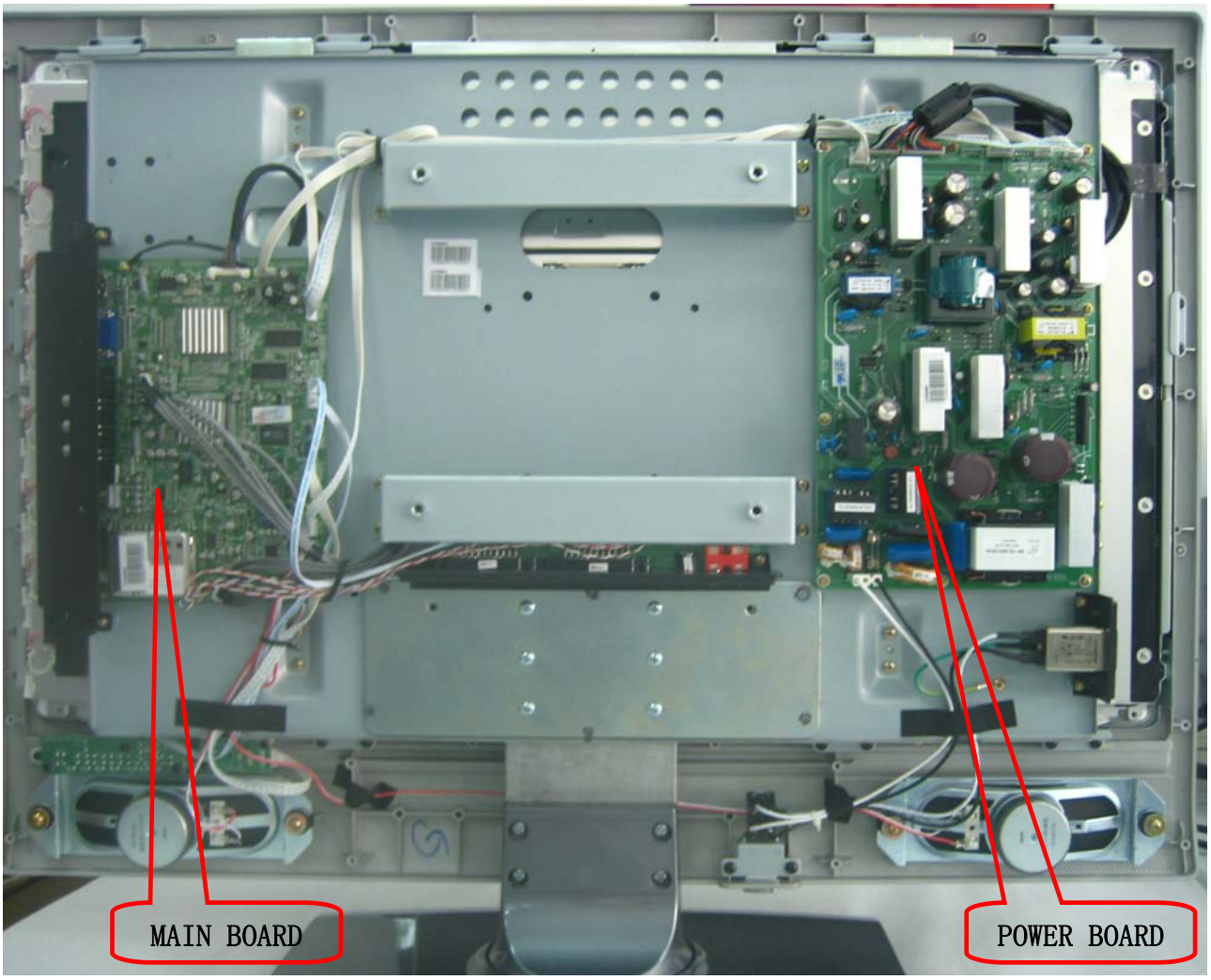

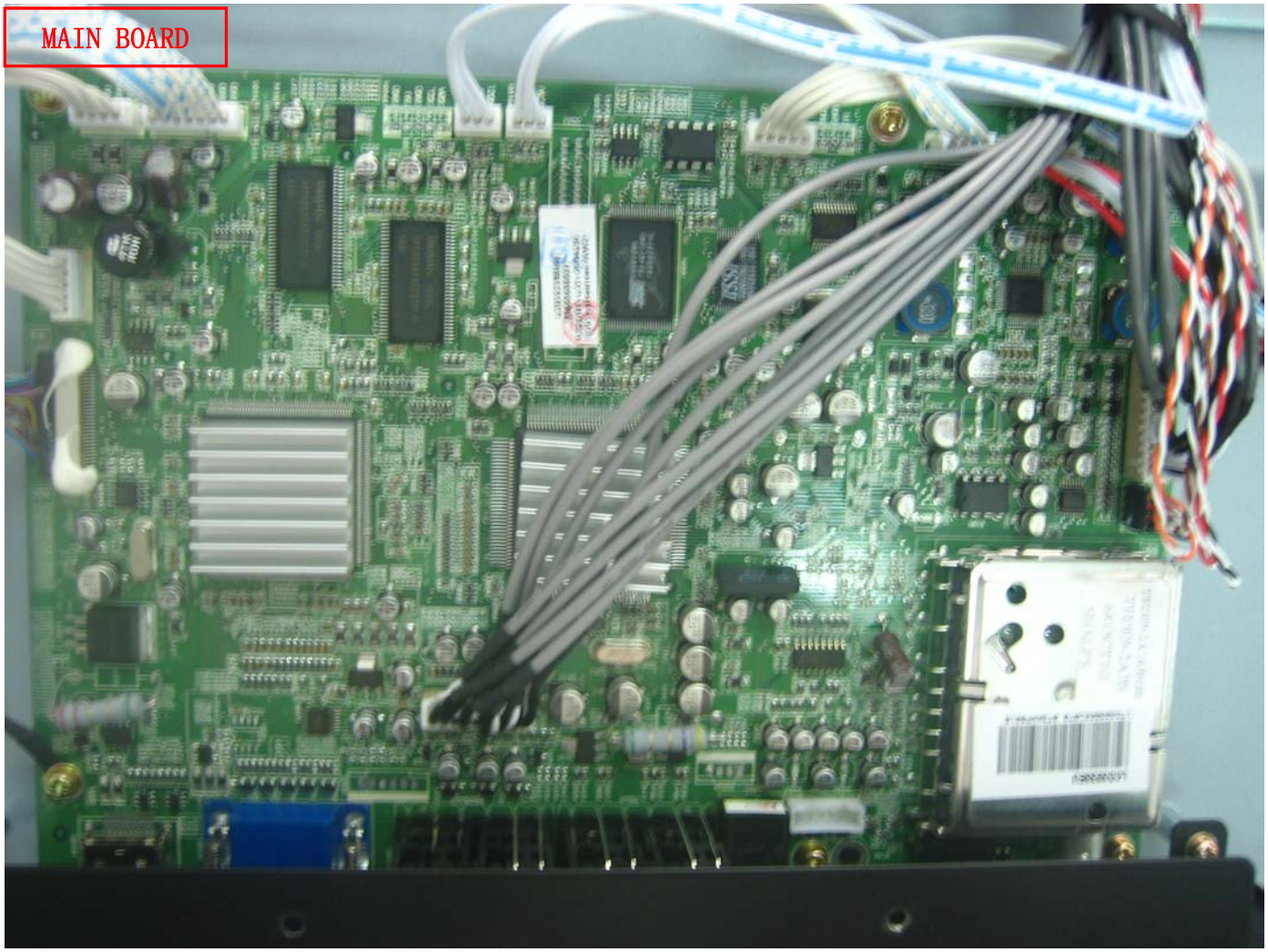
MAIN BOARD

POWER BOARD

4-2 Video Processing Part

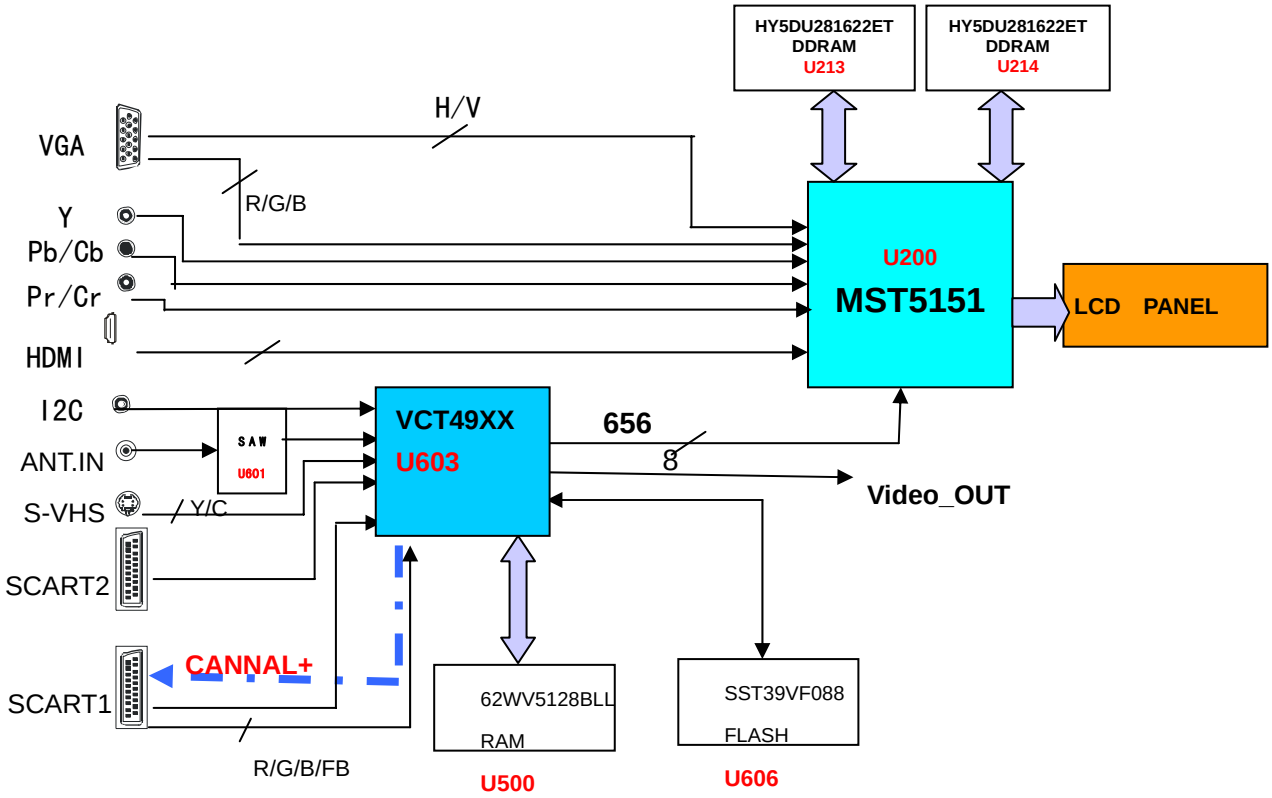

4-3 Audio Processing Part

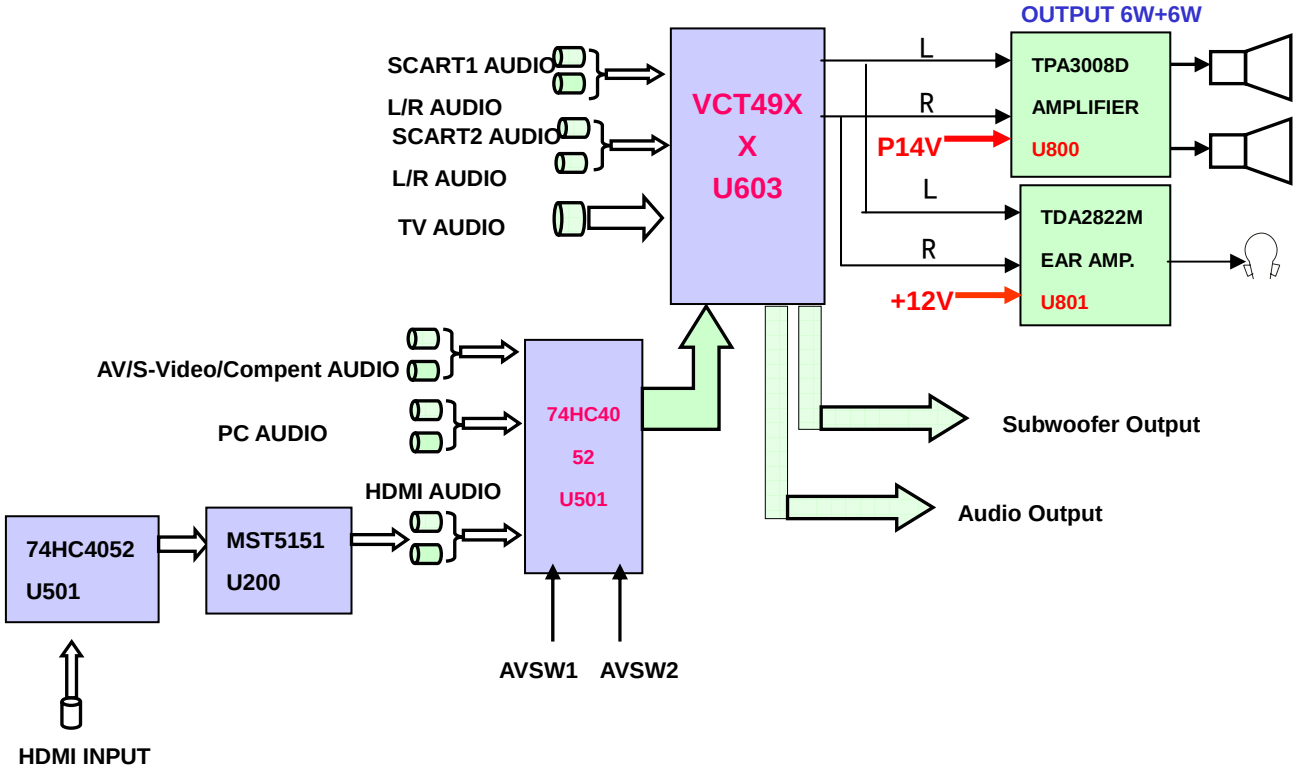

4-4 I2C Controlling Part

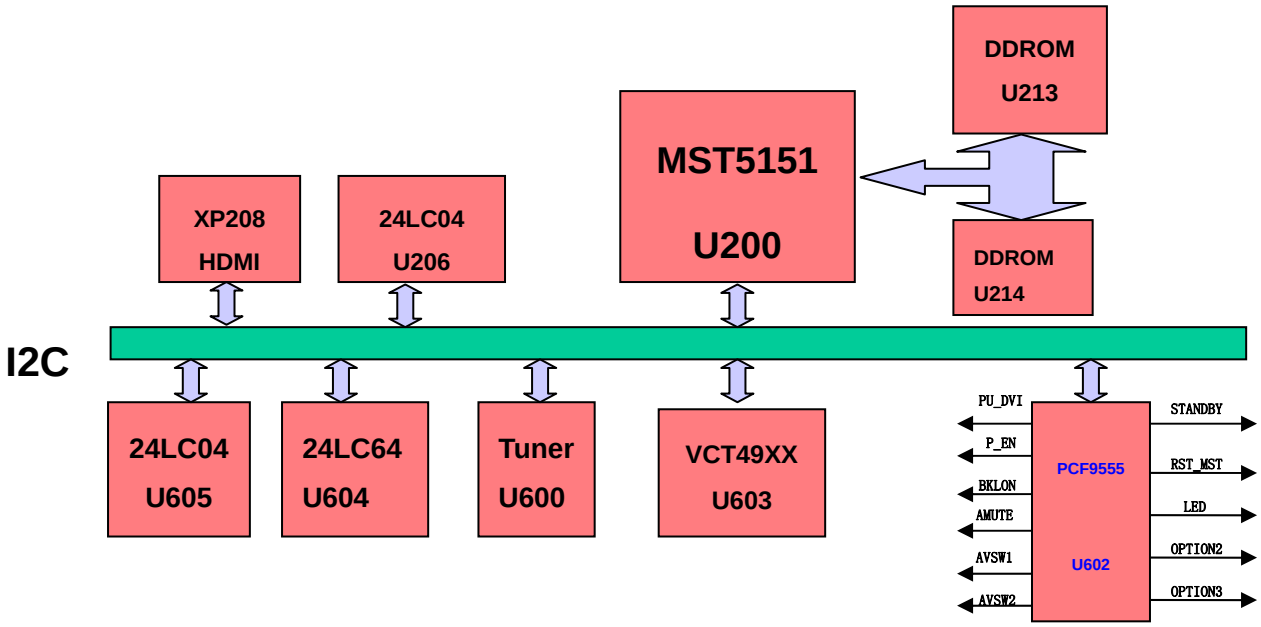

4-5 Power Part

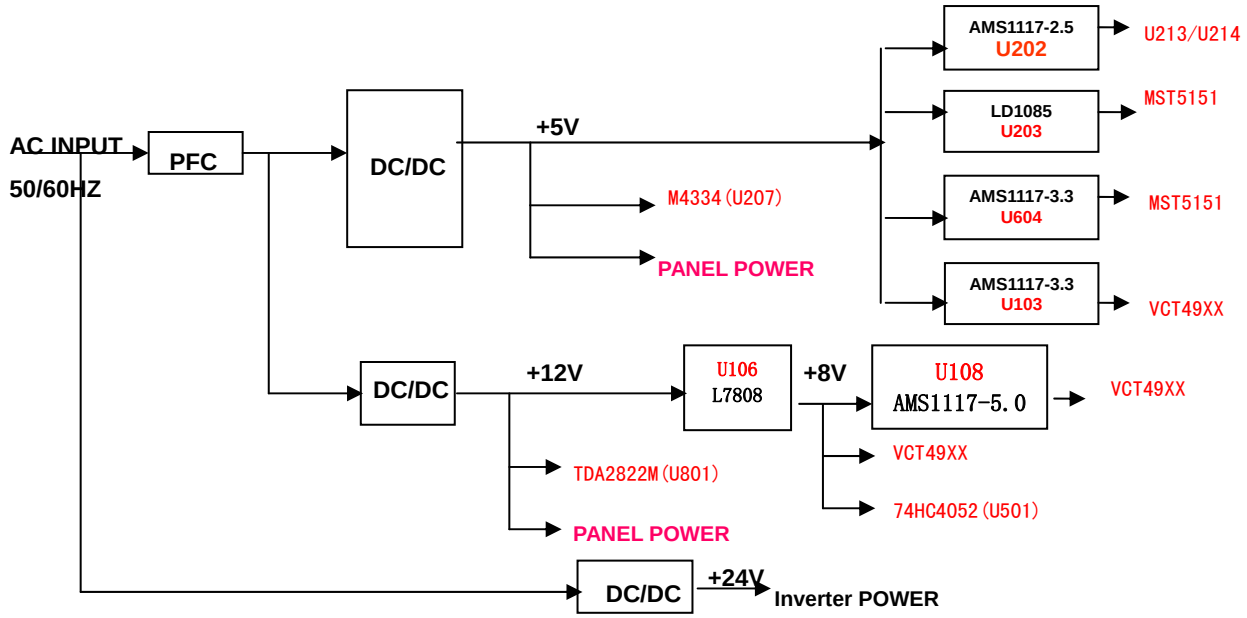

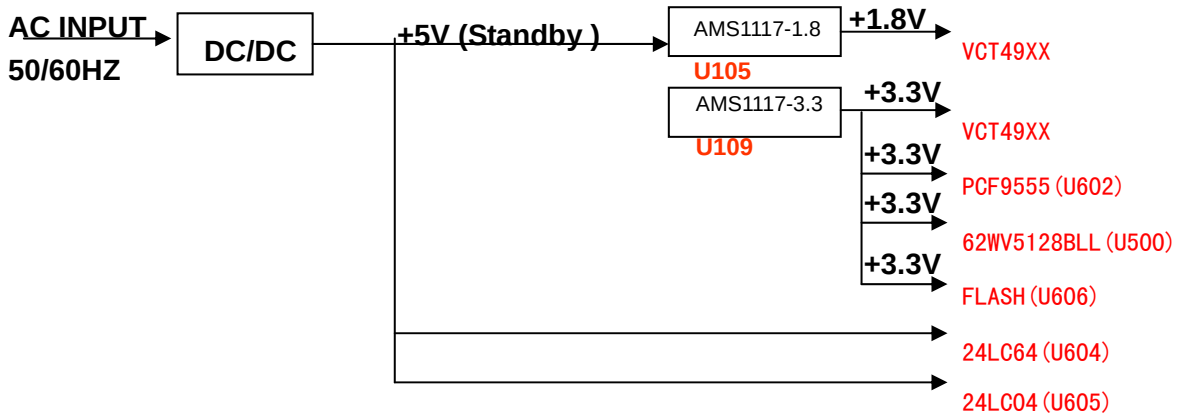

5. Service Mode And Adjustment

5-1 Service Mode

Use the remote control, first open MAIN MENU with MENU button, and choose AUDIO SETTING with the CHANNEL UP/DOWN button, then choose the BALANCE with VOLUME UP/DOWN, In this condition, press 0、5、3、2, you can enter factory menu.

5-1-1、Fac. Menu

Service Mode (TV)

White Balance	
Additional Settings	
Options 1	
Options 2	
Audio Options	
Deviation settings	
DRX	
NVM Edit	
NVM Initialize	
MinMidMax Init	
Scaler	
Set channel	
ToFAC	<0>

LCD26/3233EU
20060719

White Balance (TV)

Rgain	+126
Ggain	+121
Bgain	+115
Roffset	+119
Goffset	+122
Boffset	<+121>
WBH-Bright	<+100>
WBH-Contrast	<+100>
WBH-Satiation	<+100>
WBL-Bright	<+80>
WBL-Contrast	<+80>
WBL-Satiation	<+80>

Back: i Exit: ok

Additional settings (TV)

DYNFOC-Vertical(PWMV)	<+1>
DYNFOC-Norstart(DFHB)	<+1>
DYNFOC-Horstop(DFHE)	<+1>
OSD H-shift	<+205>
OSD H-shift split screen	<+220>
OSD V-shift	<+33>
OSD pixel clock	<+72>
Caption status Display	<NO>
XDS Data Display	<NO>

Back: i Exit: ok

Options 1 (TV)

Front AV(Ext 3)	<Yes>
Front AV Y/C(Ext 4)	<No>
Front AV(Ext 5)	<No>
DVB Module	<No>
Picture Tube 16:9	<Yes>
Blue Screen	<No>
Picture Mute	<No>
UHF Only	<No>
Search For BG,DK,I	<Yes>
Search For L/L'	<No>
Search For M	<Yes>
Pref.Search Standrd	<BG,DK,I>
Station Ident	<Yes>
ATS Delay Time (ms)	<50>

Back: i Exit: ok

Options 2 (TV)

JPEG Viewer	<NO>
Show Versions of Ics	
GTI Enable	<Yes>
LTI Enable	<No>
Scaler Chip Select	<6151>
Logo	<hisense>

Back: i Exit: ok

Audio Options (TV)

Equslizer	<Yes>
Show Volume bar	<Yes>
Auto Store Volume	<No>
BBE	<No>
Voice	<No>
SRS WOW	<No>
ACF	<No>
VolumeLim	<+100>
Volume 0	<-115>
Volume 1	<-60>
Volume 20	<-30>
Volume 50	<-15>
Volume 100	<-2>

Back: i Exit: ok

Deviaton Settings (TV)

MJapa	<+24>
BTSC	<+24>
DK Dual	<+24>
BG	<+24>
NICAM L	<+24>
NICAM I	<+24>
DK NICAM	<+24>
FM Radio	<+24>

Back: i Exit: ok

DRX (TV)

Standard Select	<BG,DK>
Top setting	<+7>
Video Peaking	<0>
SIP Reference	<+2>

Back: i Exit: ok

NVM EDit (TV)

NVM_edit addr.(hex) _ _ _
NVM_edit data.(hex) _ _
WARNing: Editing may cause defects!
NVM_data dev:000 bin:00000000

A: B: C; D: E; F; G:

Back: i Exit: ok

NVM Initialize (TV)

Initialize NVM from Rom
Continue:LEFTkey Exit: Mkey

Back: i Exit: ok

MinMidmax Init (TV)

Brightness 0	<-252>
Brightness 1	<-100>
Brightness 50	<+100>
Brightness 100	<+252>
Contrast 0	<0>
Contrast50	<+30>
Contrast 100	<+63>
Picture Mode_Bright_Bri	<+125>
Picture Mode_Bright_Con	<+153>
Picture Mode_Standard_Bri	<+125>
PictureMode_Standard_Con	<+145>
Picture Mode_Soft_Bri	<+125>
Picture Mode_Soft_Con	<+125>
Other More	

Back: i Exit: ok

Scaler (TV)

ADC Rgain	<+128>
ADC Ggain	<+128>
ADC Bgain	<+128>
ADC Roffset	<+128>
ADC Goffset	<+128>
ADC Boffset	<+128>

Back: i Exit: ok

Set Channel (TV)

Zhongshixian
Huangdao
Guizhou
Liaoning
XiongYali
AodaliYa

Please Wait

Back: i **Exit: ok**

6. Software Updating

6-1、Updating Cable

- You can update our LCD’s software through a special I2C cable(show as below)

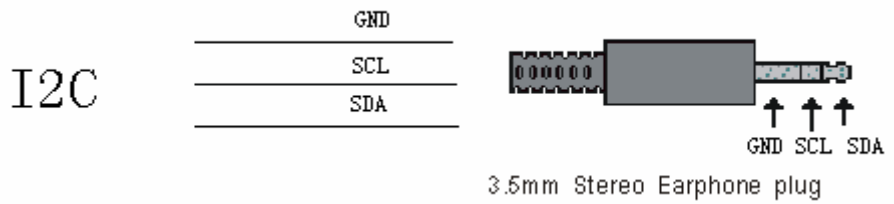

- This I2C cable includes a updating board、a 3.5mm Stereo Earphone plug and 3 wires Built the cable as show

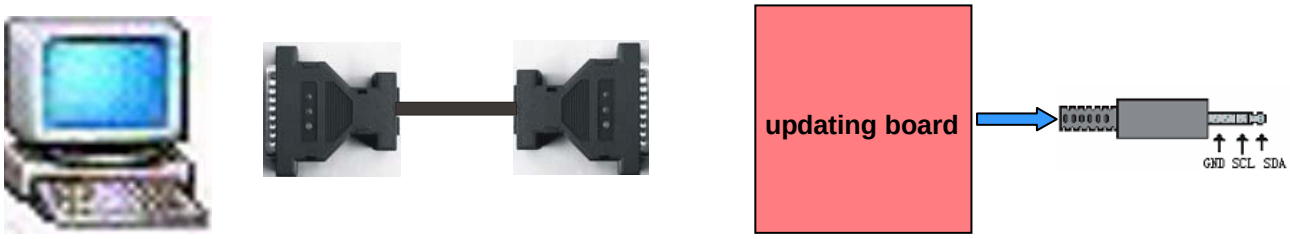

6-2、LCD3233EU/LCD2633EU Software Updating Operation

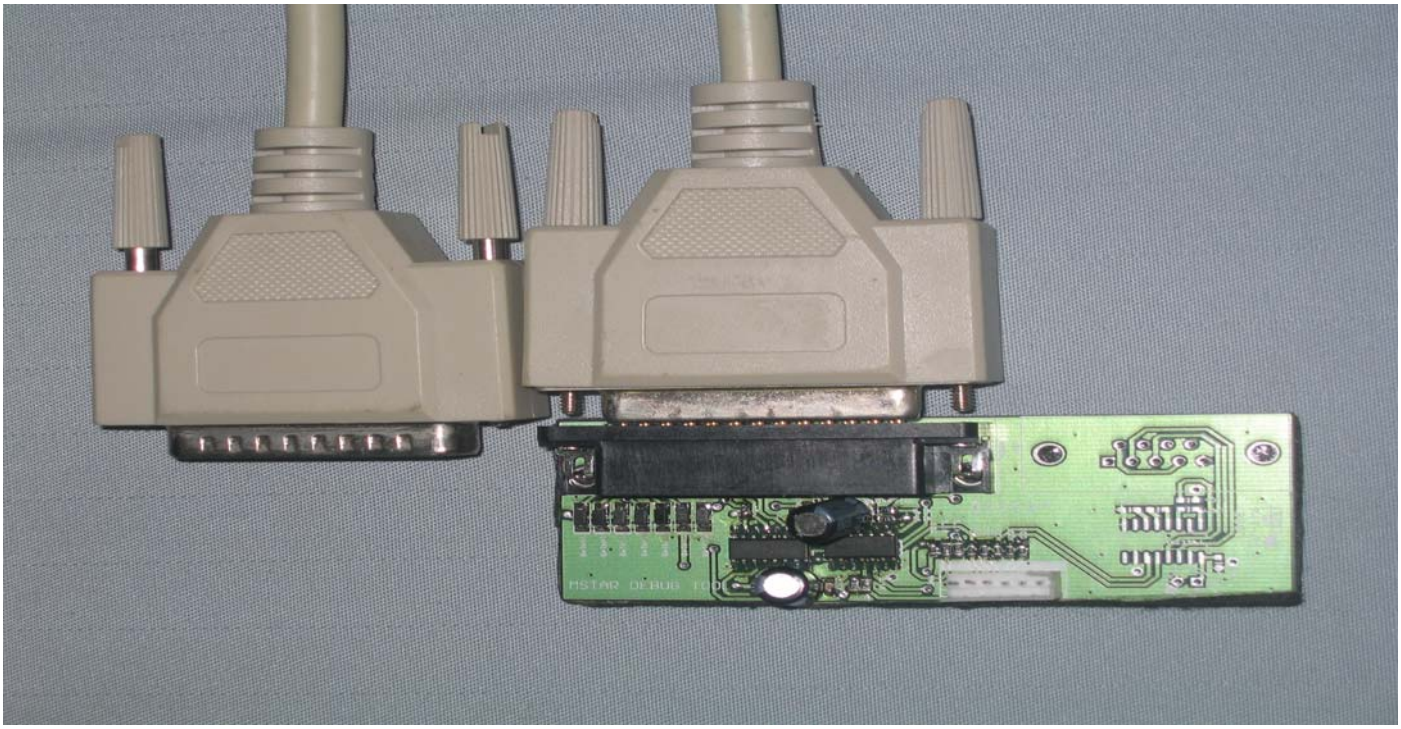

Updating jack

LPT Setup

The first step:

First double click the “LPTDrv” folder, you should select a LPT driving software in the folder.

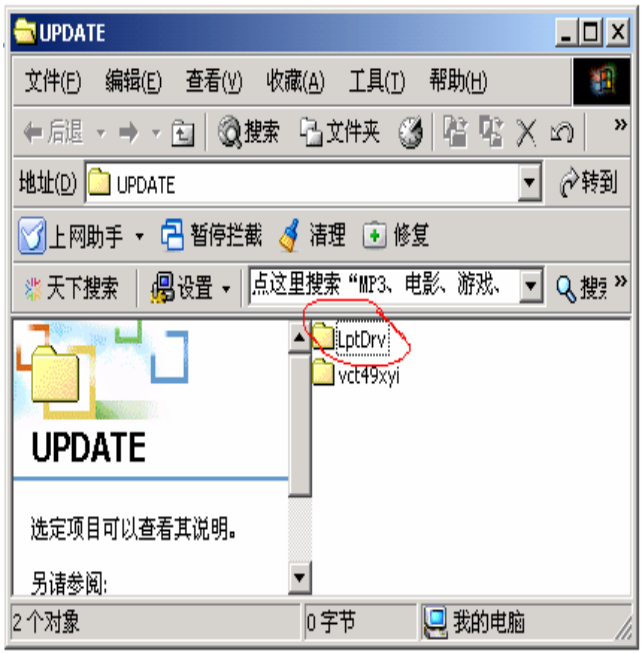

The second step:

When the LPT setup is OK, Please open the system manager and select LPT1.

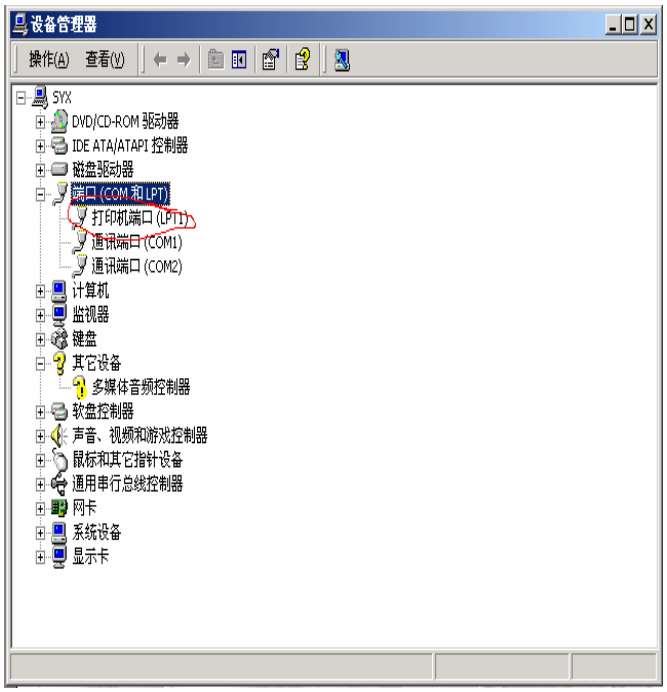

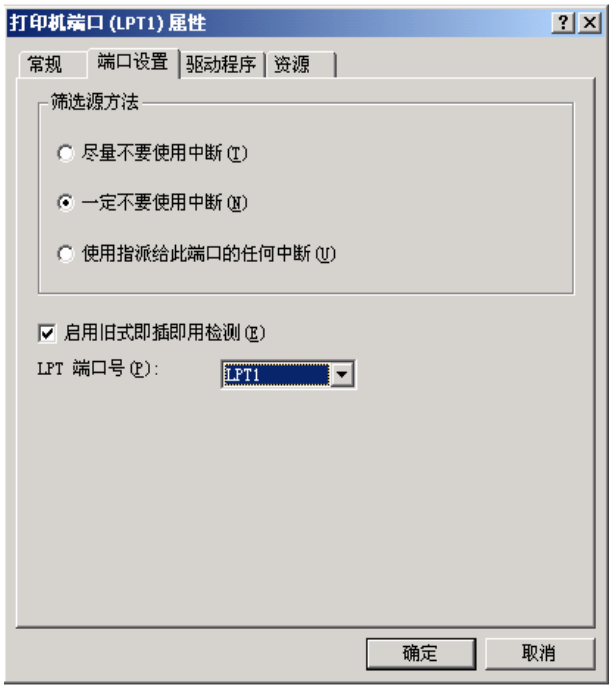

Updating Operation:

The first step:

First turn on the TV, then plug one end of the serial cable to the LPT port of PC and other end to I2C port of TV. and double click the file vct49xyi_start.exe in “vct49xyi” folder, A dialog will come up like sub picture.

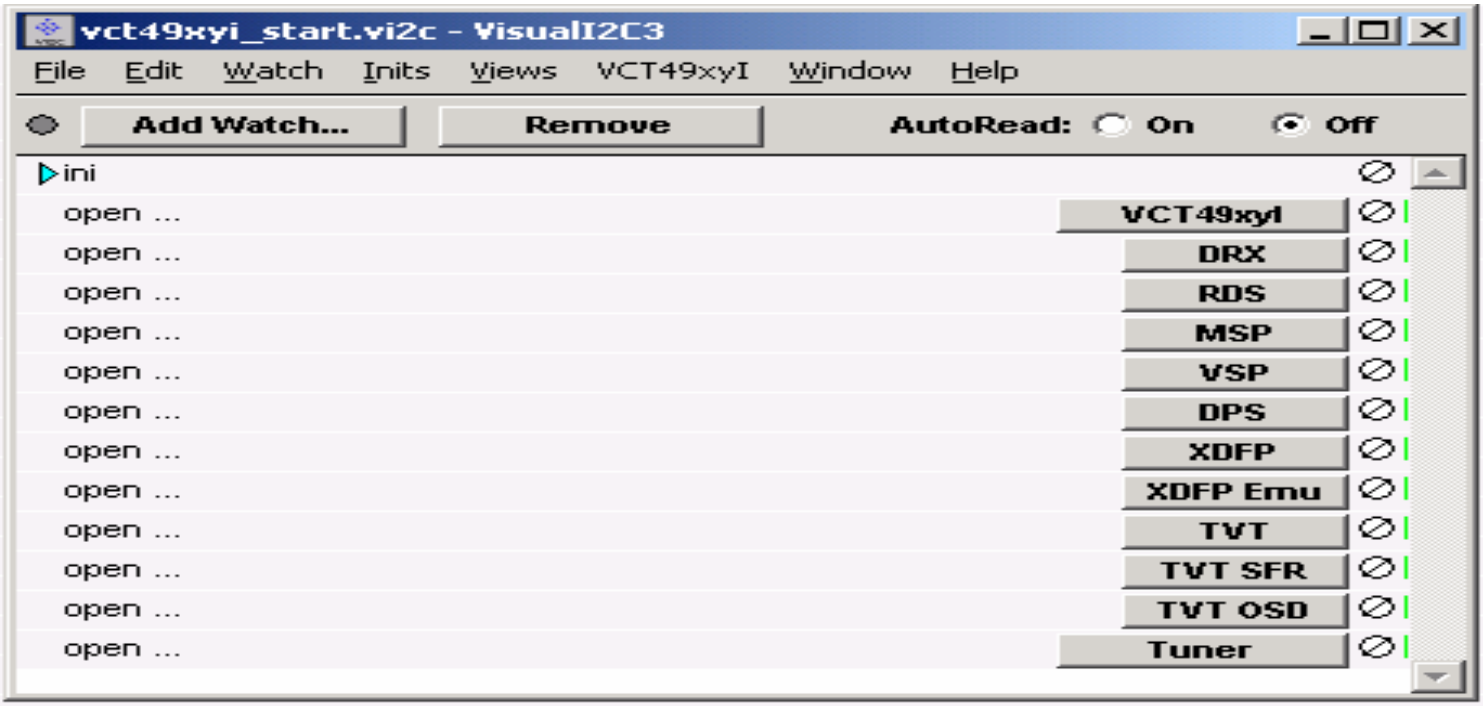

The second step:

click the “TVT” button on the bottom, A dialog will come up like sub picture.

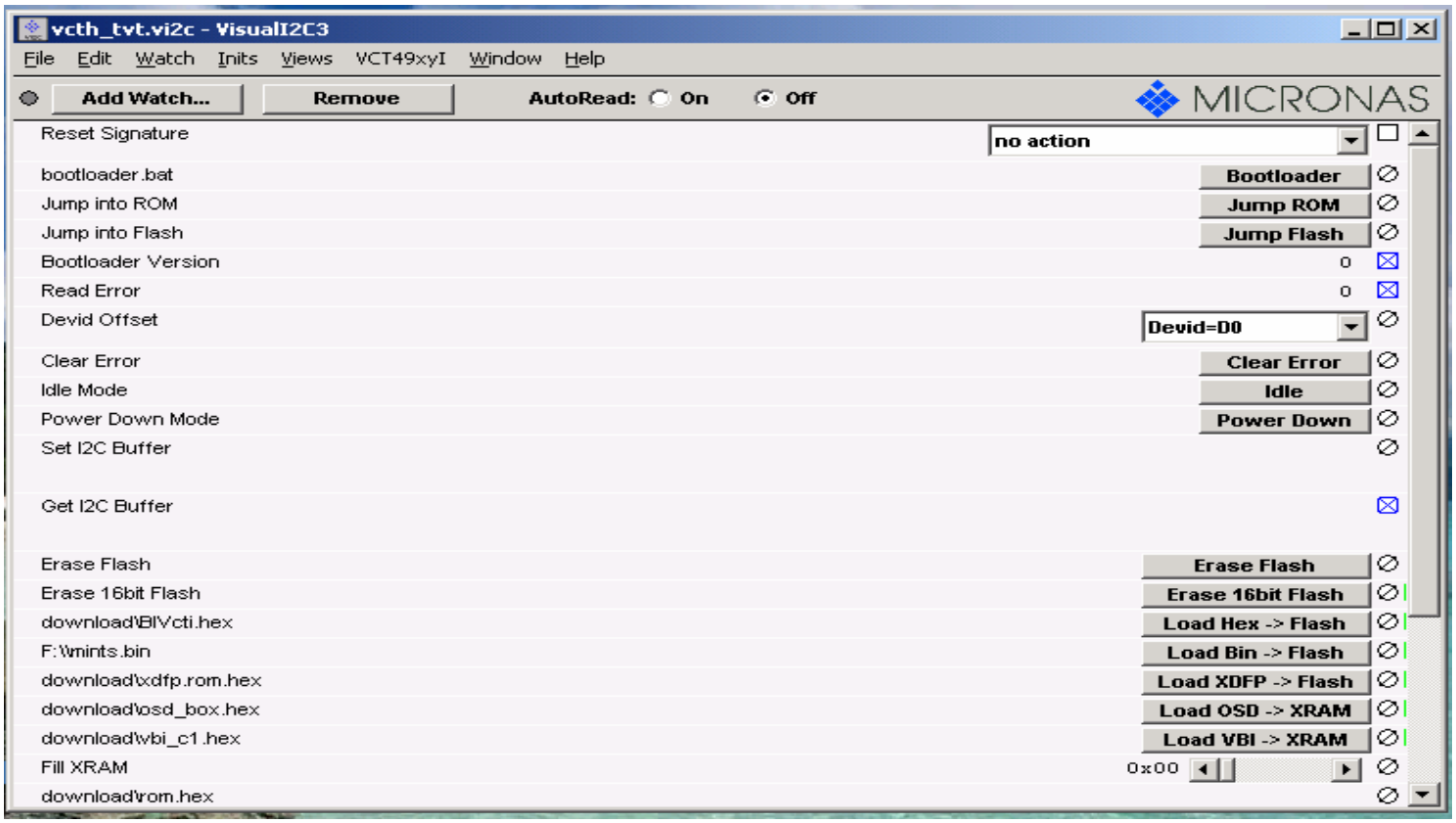

The second step:

Double click the “F:\\mints.bin” , A dialog will come up like sub picture.

Note:

LCD colour TV software updating setup

1.File->Preferences->LPT Preferences

LPT:The current LPT

Delay:0

Time out :300

2.Name:The folder of Updating software

Address : From 0x800000

To 0x87ffff

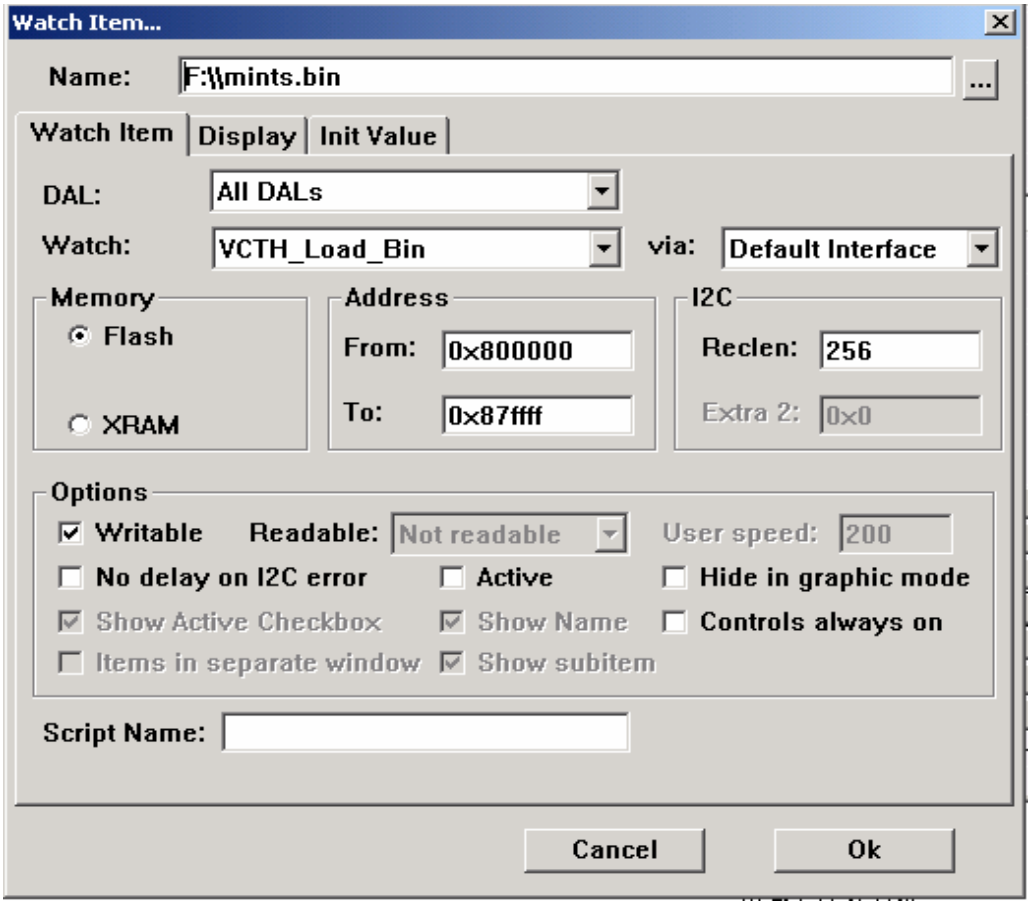

The third step:

After clicking the “TVT” button on the bottom, A DOS interface will come up like sub picture. If the word following “…” is “OK” , it shows that the communication between the LCD colour TV and compute is OK, or it needs to check the connect of I2C.

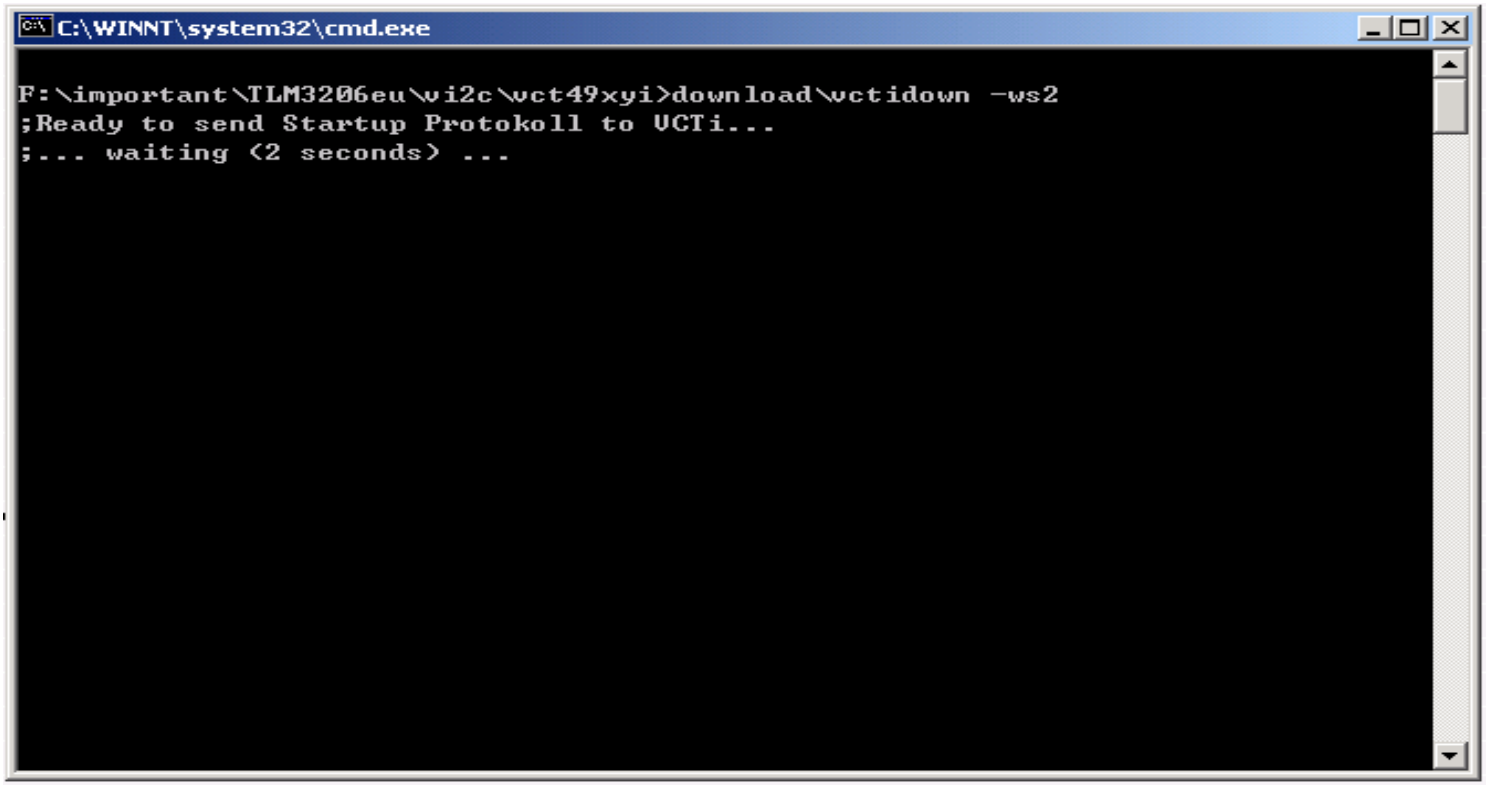

The fourth step:

1. After the DOS interface disappeared. click the “Bootloder Version ” button, it ought to shows “22” without red words such as “No Acknowledge from Stave”.

2. Wait for 30 seconds after clicking the “Erase 16Bit Flash ” button

3. If the red words such as “No Acknowledge from Stave” don’t appear After the updating progress, that the software updating is OK.

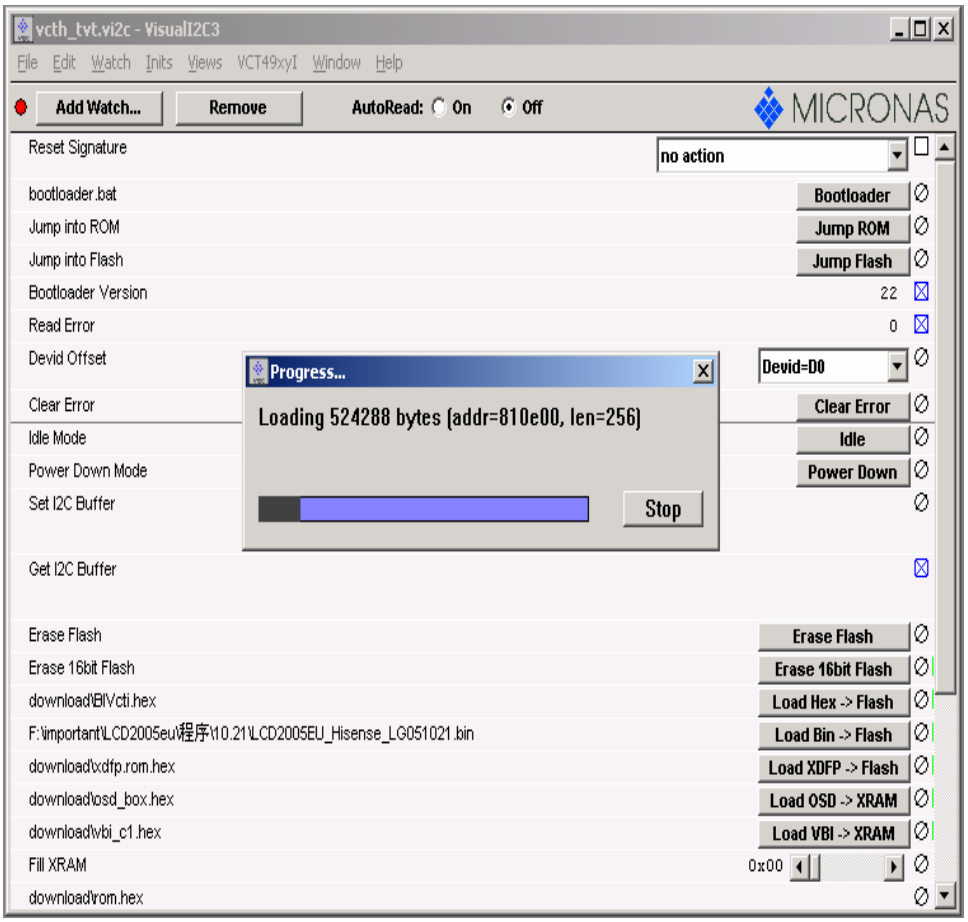

7. LCD3233EU/LCD2633EU Explode View And Bom

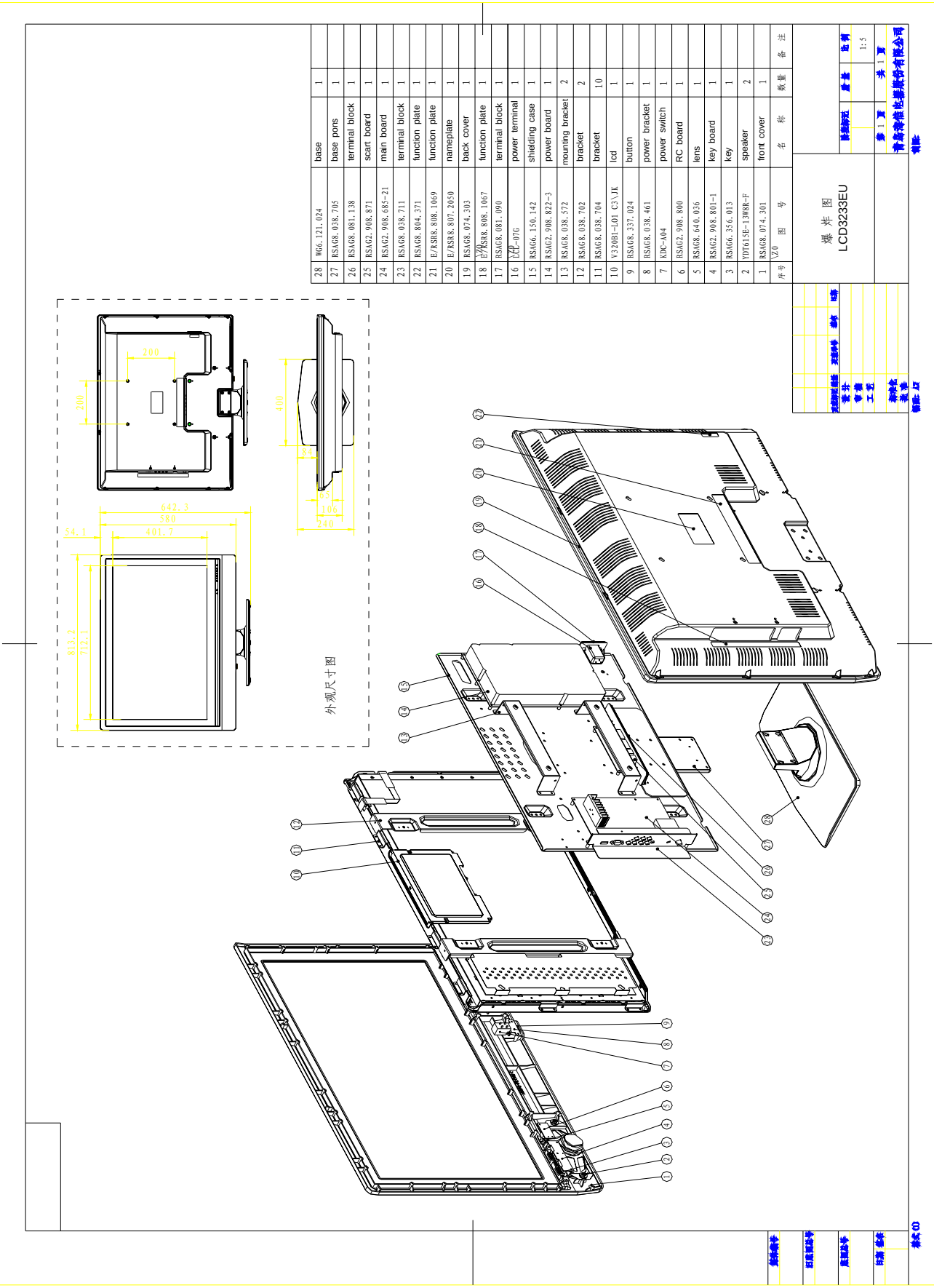

序号	图号	名称	数量	备注
28	WG6.121.024	base	1	
27	RSAG8.038.705	base pons	1	
26	RSAG8.081.138	terminal block	1	
25	RSAG2.908.871	scart board	1	
24	RSAG2.908.685-21	main board	1	
23	RSAG8.038.711	terminal block	1	
22	RSAG8.804.371	function plate	1	
21	E/RSR8.808.1069	function plate	1	
20	E/RSR8.807.2050	nameplate	1	
19	RSAG8.074.303	back cover	1	
18	E/RSR8.808.1067	function plate	1	
17	RSAG8.081.090	terminal block	1	
16	LCU-076	power terminal	1	
15	RSAG6.150.142	shielding case	1	
14	RSAG2.908.822-3	power board	1	
13	RSAG8.038.572	mounting bracket	2	
12	RSAG8.038.702	bracket	2	
11	RSAG8.038.704	bracket	10	
10	V320B1-L01 C3VJK	lcd	1	
9	RSAG8.337.024	button	1	
8	RSAG8.038.461	power bracket	1	
7	KDC-A04	power switch	1	
6	RSAG2.908.800	RC board	1	
5	RSAG8.640.036	lens	1	
4	RSAG2.908.801-1	key board	1	
3	RSAG6.356.013	key	1	
2	YDT615E-13W8R-F	speaker	2	
1	RSAG8.074.301	front cover	1	

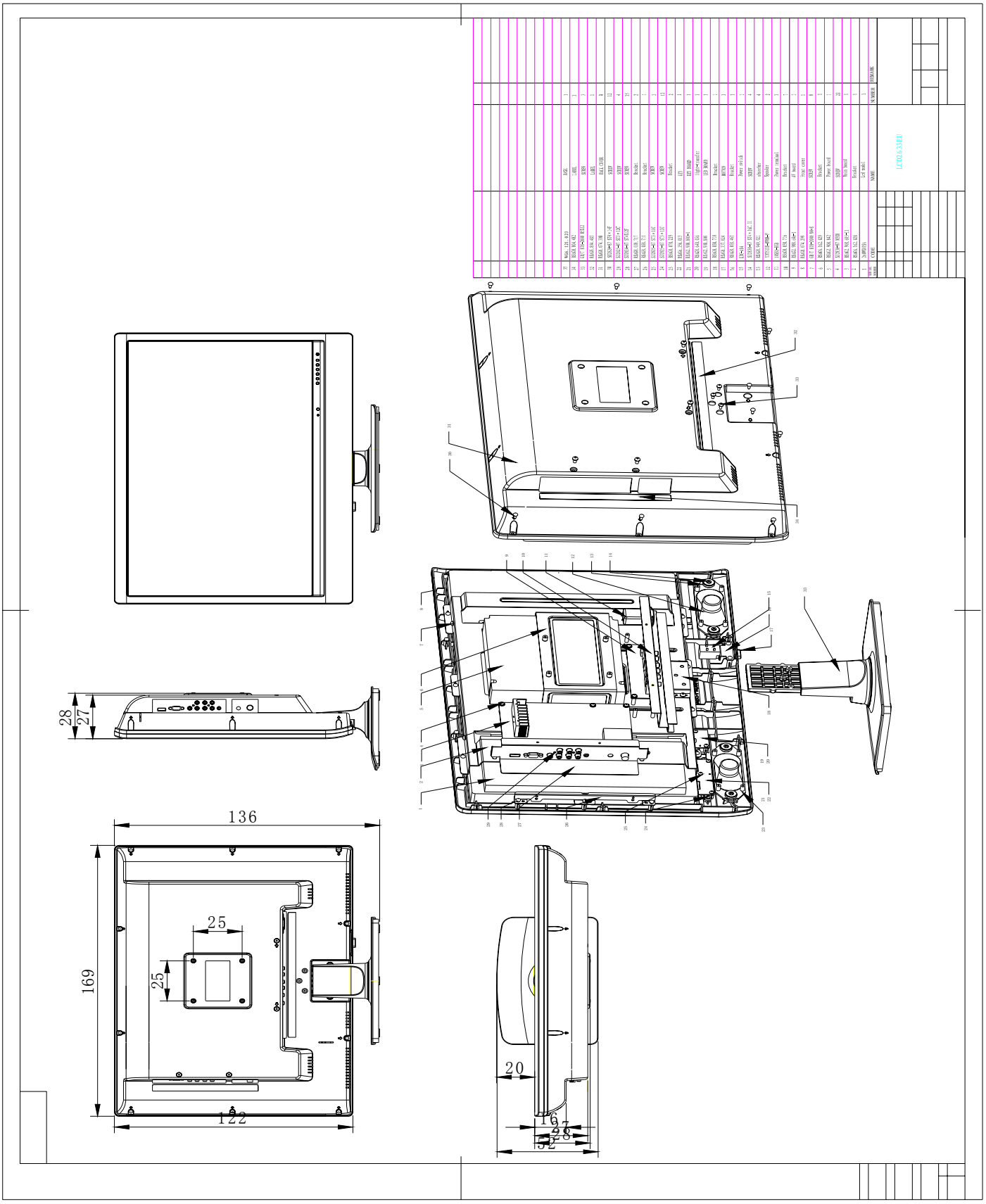
LCD26.33EU
136
169
122
25
25
28
27
20
16
26
28
32

8. Spare Parts List

please refer to Spare Parts List.

9. Troubleshooting

No.	Trouble	Measure
1	Turn on the TV,The LED is red,no display on screen	replace the main board or updating the software.(it ' s the software is wrong)
2	Turn on the TV,The LED is blue,but no picture or/and no sound	you should to replace the main board.
3	In TV state,can not to tuning	you should to replace the main board.
4	No teletext	You should to replace the main board.(the teletext IC bad)
5	No sound	You should to replace the main board.
6	can not to updating software	You should to replace the main board
7	No reaction with PC	You should change the main board

10. Ciruit Diagram

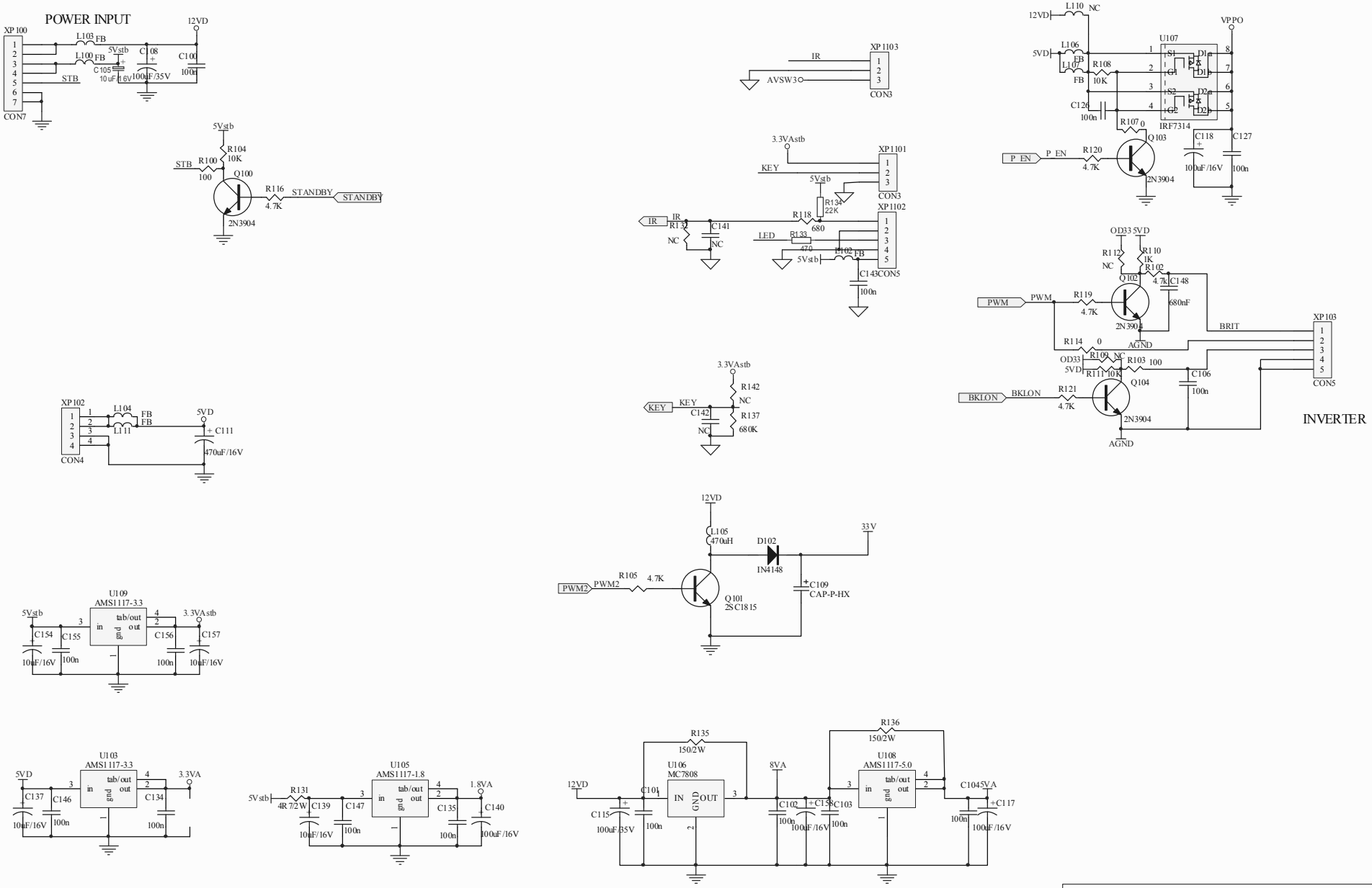

Mstar semiconductor 深圳科技园南区国际技术创新研究院C座4楼, 518057 Phone: 86-755-26996895 Fax: 86-755-26996830			
Title: MST5151 LCD TV Solution—MMG49X	Number:	Revision: Rev.A	Size: A3
File: 01_SYSTEM_POWER.Sch	Brawn: Potato	Date: 2006-7-18	
Eng. Appr.:	Date:	Sheet 1 of 6	Printed Date/Time: 上午 09:11:25

01_SYSTEM_POWER
01_SYSTEM_POWER.Sch

- PWM
- BKLON
- P_EN
- STANDBY
- IR
- RTC_INT
- KEY
- STANDBY
- 8532_IO1
- IR
- PWM2

02_Scaler_PC &601 &MCU
02_Scaler_PC &601 &MCU .Sch

- BUD[0..7]
- VPDA[0..7]
- PWM
- RST_MST
- INT_M
- AIN1L
- AIN1R
- PWM2

03_Scaler HDMI&HDTVinput
03_Scaler HDMI&HDTVinput.Sch

- PU_DVI
- DM_L
- DM_R
- AIN2L
- AIN2R

04_Scaler DDRAM
04_Scaler DDRAM.Sch

07_VCTI-Core
07_VCTI-Core.Sch

- DB
- ADB
- CONTROL
- CONTROL
- SCL
- SDA
- VPDA[0..7]
- PU_DVI
- P_EN
- BKLON
- AIN3L
- AIN3R
- AIN2L
- AIN2R
- AIN1L
- AIN1R
- BUD[0..7]
- BUD[0..7]
- INT_M
- IR
- KEY
- 8532_IO1
- AOUT1L
- AOUT1R
- VOUT1
- VOUT2
- PIP_VIN
- VIN7
- Vin11/FBin2
- Vin10/Bin2
- Vin9/Gin2
- Vin8/Rin2
- AOUT2L
- AOUT2R
- SCART1
- SCART2
- VIN1
- VIN4
- VIN3
- VIN5
- VIN6
- VIN2
- AGC
- SPEAKERL
- SPEAKERR
- AMUTE
- PHDET
- SUBWOOFER
- IFIN1
- AVSW1
- AVSW2
- RST_MST
- IFIN2

06_VCTI_AVinput
06_VCTI_AVinput.Sch

- VIN3
- VIN4
- VIN5
- VIN6
- VIN7
- VIN2
- VOUT1
- Vin10/Bin2
- Vin9/Gin2
- Vin8/Rin2
- Vin11/FBin2
- SCART1
- VOUT2
- AOUT1L
- AOUT1R
- SCART2
- AOUT2R
- AOUT2L
- VIN1
- AIN3L
- AIN3R
- PIP_VIN
- SUBWOOFER
- SPEAKERL
- SPEAKERR
- AGC
- SDA
- SCL
- IFIN
- AVSW2
- AVSW1
- PHDET
- AMUTE
- INPUT_V11
- INPUT_V10
- INPUT_V8
- INPUT_V9
- INPUT_V7
- INPUT_V6
- INPUT_V5
- INPUT_V4
- INPUT_V3
- INPUT_V2
- INPUT_V1
- AV_R
- AV_L
- A2RO
- A2LO
- AV_RO
- AV_LO
- SP_R
- SUBWOOFER
- SP_L
- AV_VO
- A2VO
- A3VO
- SCART2
- SCART1
- IFIN
- IFIN1
- IFIN2
- INPUT_V5
- INPUT_V6

08_VCTI-Memory-Interface
08_VCTI-Memory-Interface.Sch

- ADB
- DB
- CONTROL
- CONTROL
- ADB
- DB

09_AMP_TA2024
09_AMP_TA2024.SCH

- SPEAKERL
- SPEAKERR
- AMUTE
- SPEAKERL
- SPEAKERR

05_AV_INPUT
05_AV_INPUT.Sch

- AVSW1
- AVSW2
- SCART1_L
- SCATR2_L
- SCART1_R
- SCART2_R
- AV_L
- AV_R
- INPUT_V5
- INPUT_V6

Title		
Size A4	Number	Revision
Date: 2006-7-18		Sheet of
File: F:\wanglp\..\11_MST5151A.Sch		Drawn By:

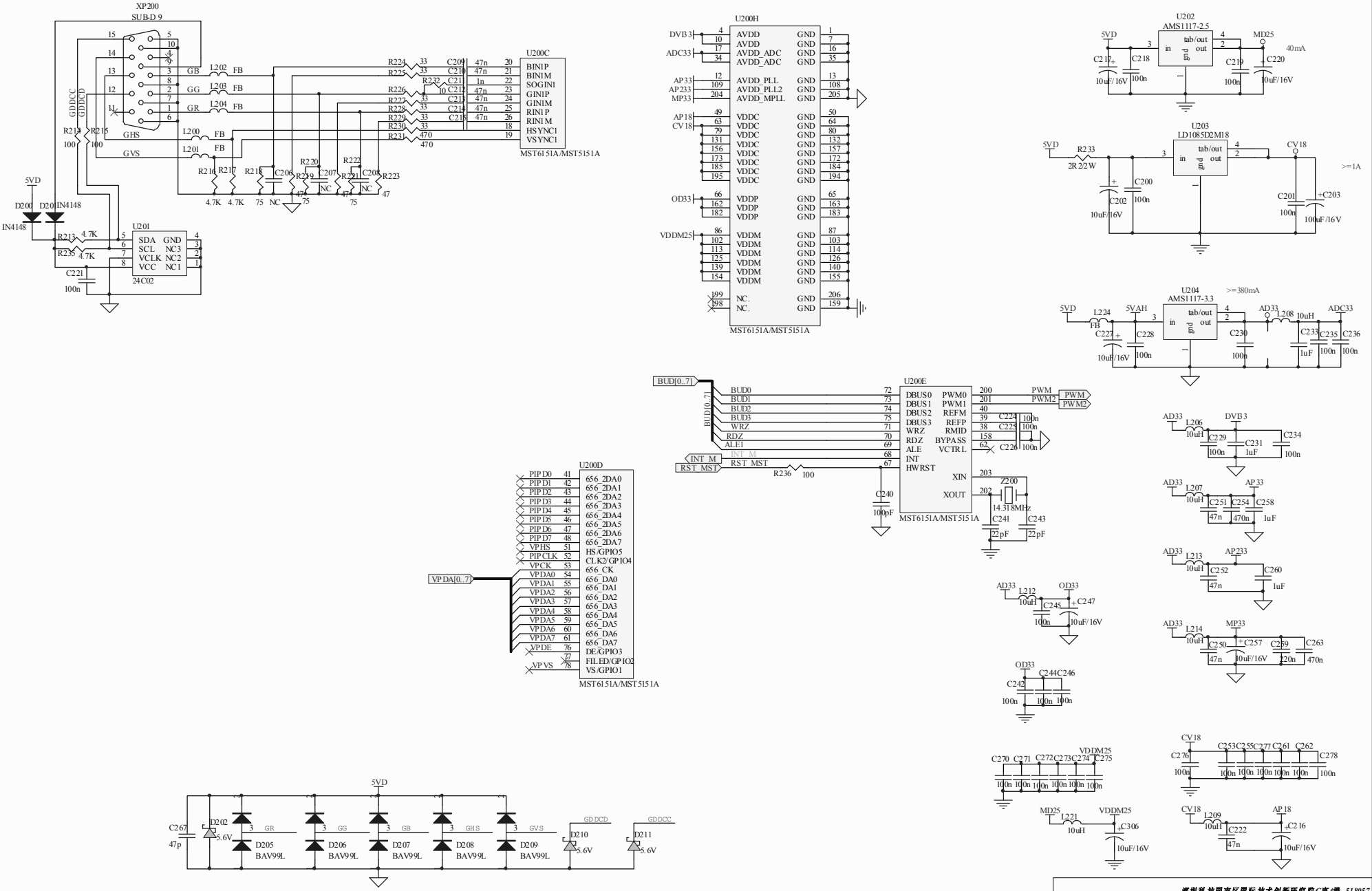

Mstar semiconductor
深圳科技园南区国际技术创新研究院C座4楼, 518057
Phone: 86-755-26996895 Fax: 86-755-26996830

Title: MST5151 LCD TV Solution—MMG49X		Number: 8	Revision: Rev.A / Size: A3
File: 02_Scaler_PC &601 &MCU .Sch		Brawn: Potato	Date: 2006-7-18
Eng. Appr.:	Date:	Sheet 2 of 6	Printed Date/Time: 上午 09:11:25

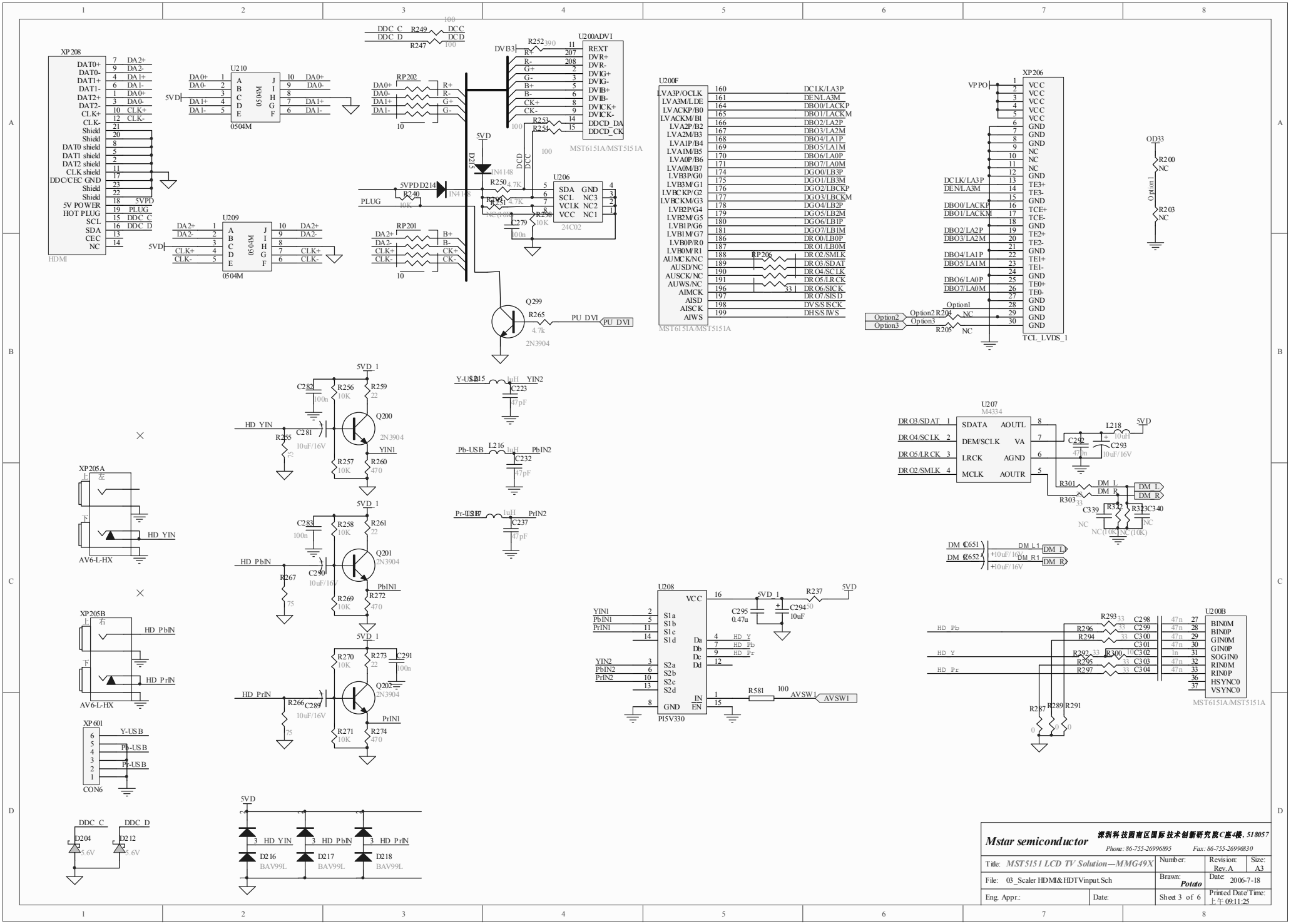
XP208
HDMI
U210
0504M
U209
0504M
U200ADVI1
MST6151A/MST5151A
U206
24C02
U200F
MST6151A/MST5151A
XP206
TCL_LVDS_1
OD33
U207
M4334
U208
PI5V330
U200B
MST6151A/MST5151A
XP205A
AV6-L-HX
XP205B
AV6-L-HX
XP601
CON6
Q200
Q201
Q202
Q299
2N3904
D204
D212
D216
D217
D218
BAV99L
Mstar semiconductor
深圳科技园南区国际技术创新研究院C座4楼，518057
Phone: 86-755-26996895
Fax: 86-755-26996830
Title: MST5151 LCD TV Solution—MMG49X
Number:
Revision: Rev.A
Size: A3
File: 03_Scaler HDMI&HDTVinput.Sch
Brawn: Potato
Date: 2006-7-18
Eng. Appr.:
Date:
Sheet 3 of 6
Printed Date/Time: 上午 09:11:25

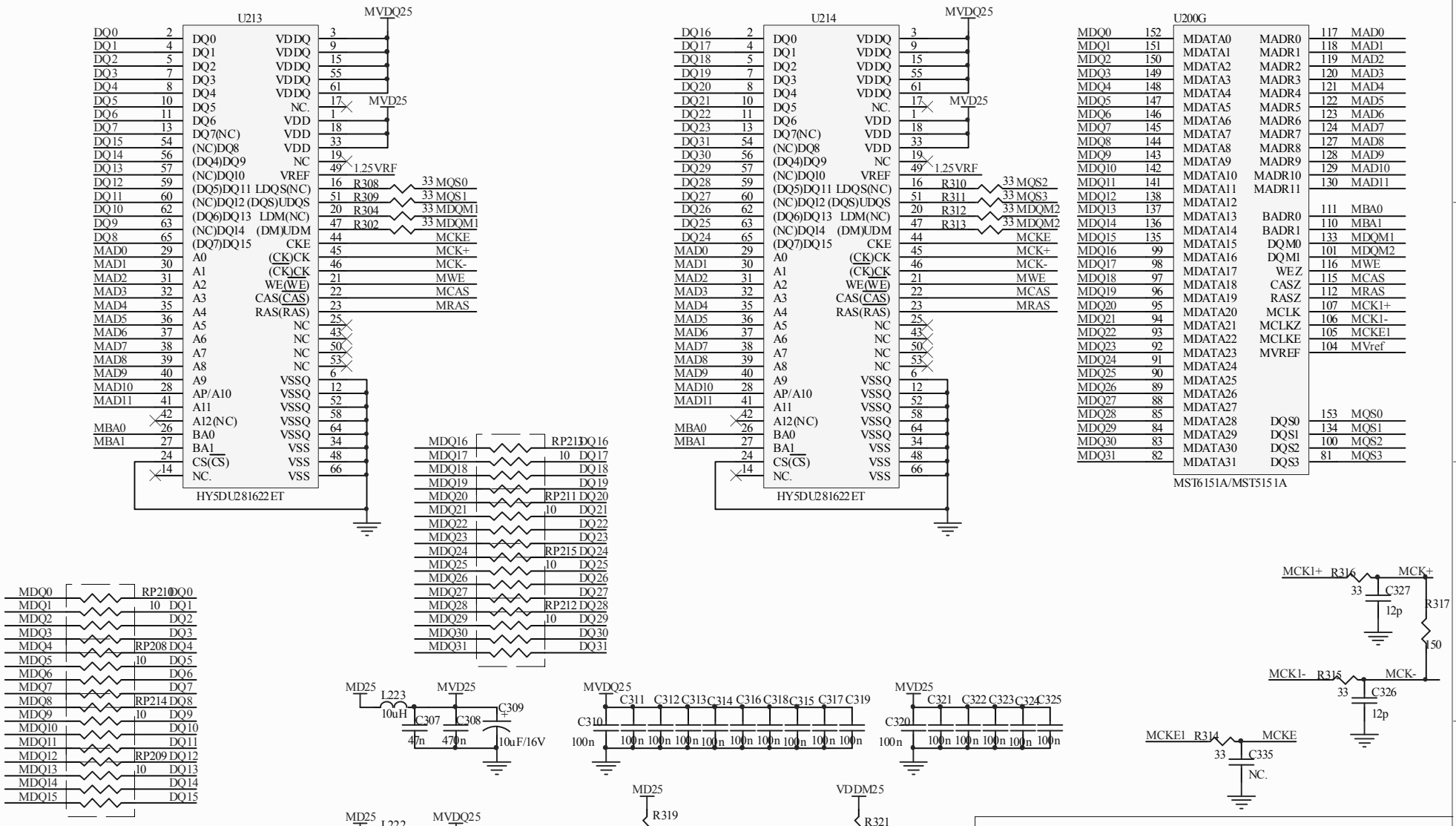

Mstar semiconductor 深圳科技园南区国际技术创新研究院C座4楼, 518057
Phone: 86-755-26996895 Fax: 86-755-26996830

Title: MST5151 LCD TV Solution---MMG49X		Number:	Revision: Rev.A / Size: A4
File: 04_Scaler DDRAM.Sch		Drawn: Potato	Date: 2006-7-18
Eng. Appr.:	Date:	Sheet 4 of 6	Printed Date/Time: 上午 09:11:25

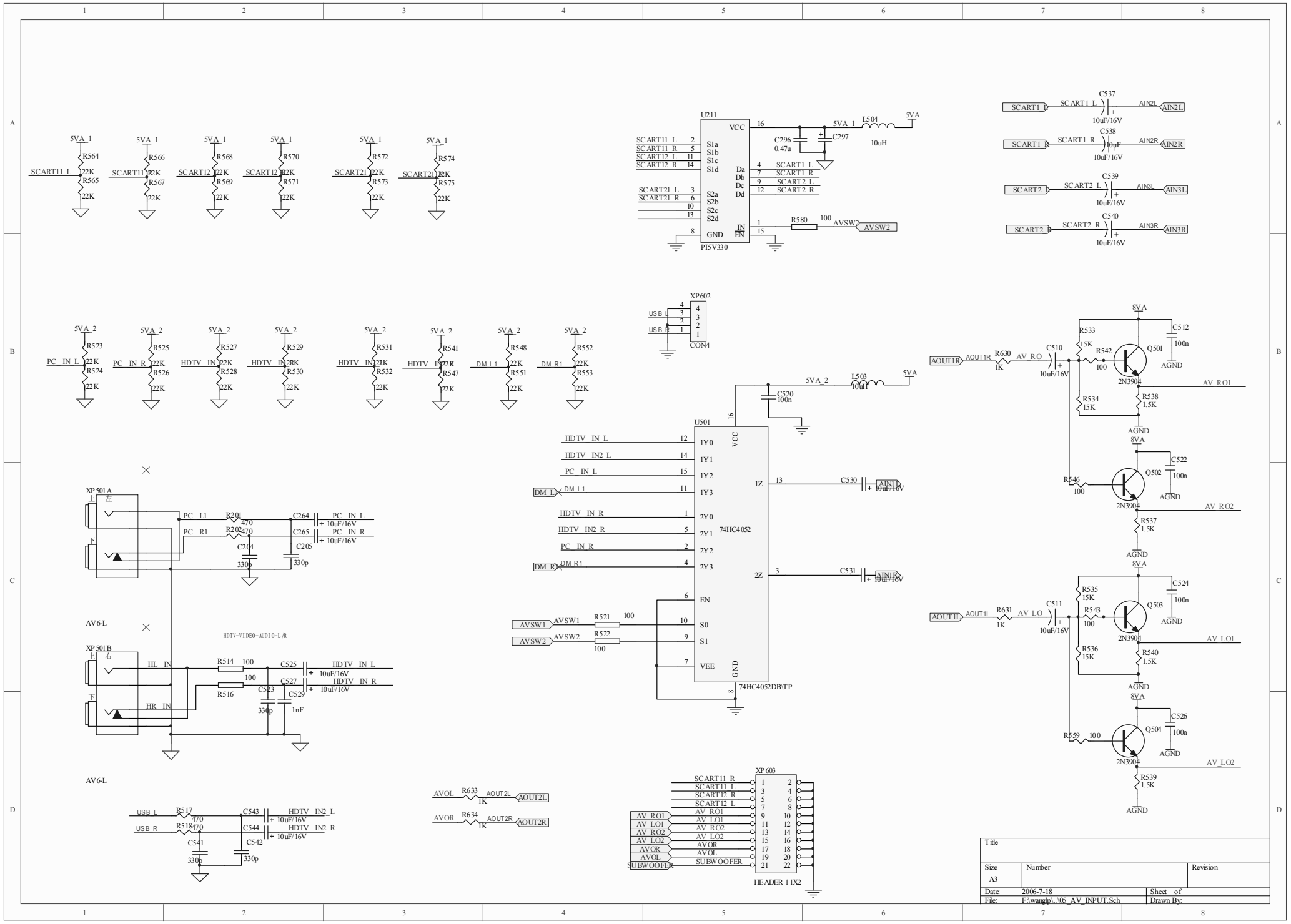
5VA_1
R564
22K
R565
22K
SCART11_L
R566
R567
SCART11_R
R568
R569
SCART12_L
R570
R571
SCART12_R
R572
R573
SCART21_L
R574
R575
SCART21_R
U211
VCC
S1a
S1b
S1c
S1d
Da
Db
Dc
Dd
S2a
S2b
S2c
S2d
GND
IN
EN
PI5V330
C296
0.47u
C297
L504
10uH
5VA
R580
100
AVSW2
C537
C538
C539
C540
10uF/16V
AIN2L
AIN2R
AIN3L
AIN3R
SCART1
SCART2
5VA_2
R523
R524
PC_IN_L
R525
R526
PC_IN_R
R527
R528
HDTV_IN1_L
R529
R530
HDTV_IN1_R
R531
R532
HDTV_IN2_L
R541
R547
HDTV_IN2_R
R548
R551
DM_L1
R552
R553
DM_R1
XP602
USB_L
USB_R
CON4
XP501A
PC_L1
PC_R1
R201
R202
470
C264
C265
PC_IN_L
PC_IN_R
C204
C205
330p
AV6-L
HDTV-VIDEO-AUDIO-L/R
XP501B
HL_IN
HR_IN
R514
R516
100
C525
C527
HDTV_IN_L
HDTV_IN_R
C523
C529
1nF
U501
HDTV_IN_L
HDTV_IN2_L
PC_IN_L
DM_L
DM_L1
HDTV_IN_R
HDTV_IN2_R
PC_IN_R
DM_R
DM_R1
1Y0
1Y1
1Y2
1Y3
2Y0
2Y1
2Y2
2Y3
EN
S0
S1
VEE
1Z
2Z
74HC4052
74HC4052DB\TP
C520
100n
L503
10uH
C530
C531
AIN1L
AIN1R
AVSW1
AVSW2
R521
R522
AOUT1R
AOUT1L
R630
R631
1K
AV_RO
AV_LO
C510
C511
R533
R534
R535
R536
15K
R542
R543
Q501
Q502
Q503
Q504
2N3904
8VA
C512
C522
C524
C526
AGND
AV_RO1
AV_RO2
AV_LO1
AV_LO2
R538
R537
R540
R539
R546
R559
AVOL
AVOR
R633
R634
AOUT2L
AOUT2R
USB_L
USB_R
R517
R518
C543
C544
HDTV_IN2_L
HDTV_IN2_R
C541
C542
XP603
SUBWOOFER
HEADER 11X2
Title
Size
A3
Number
Revision
Date: 2006-7-18
Sheet of
File: F:\wanglp\..\05_AV_INPUT.Sch
Drawn By:

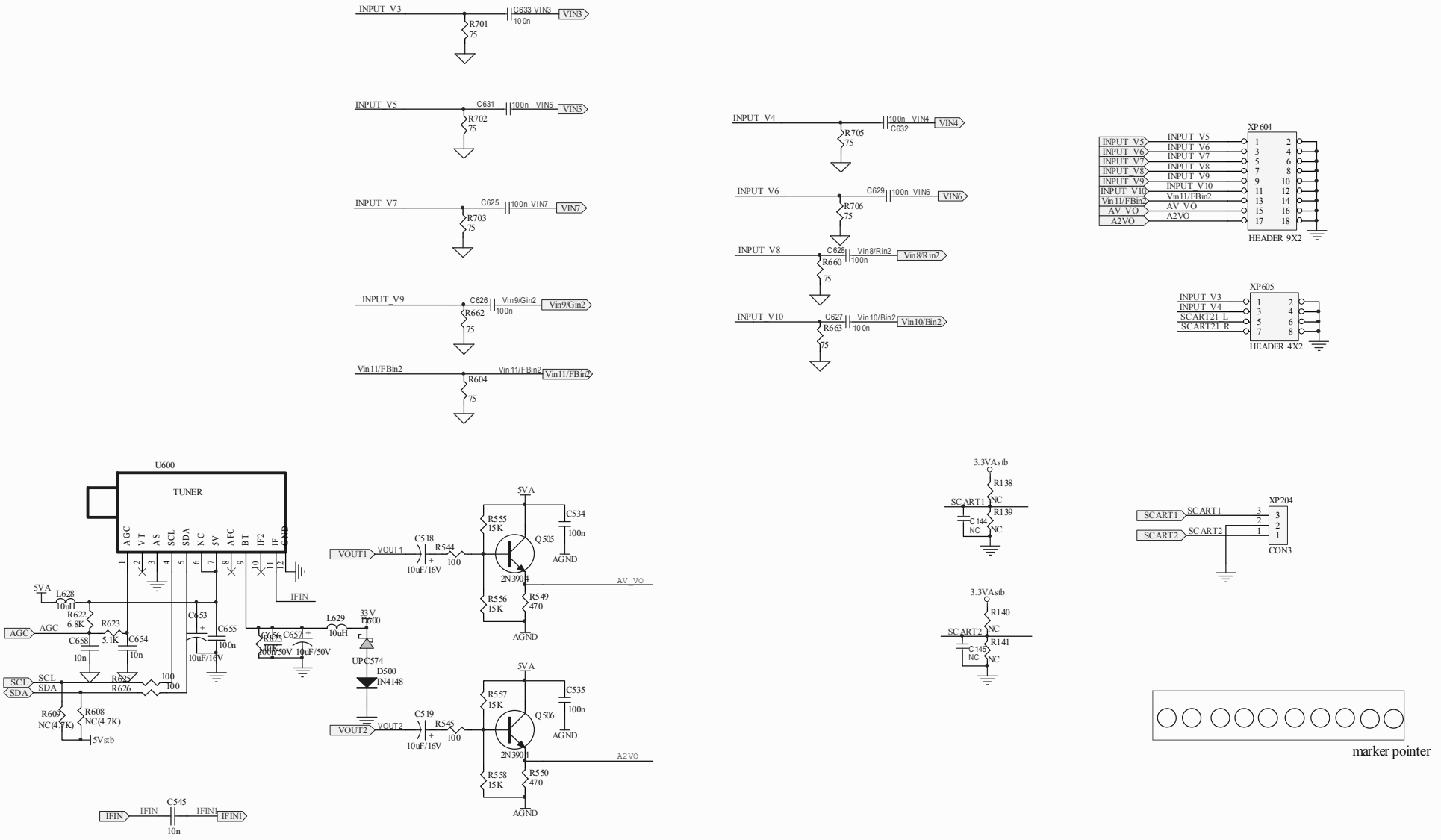

Mstar semiconductor 深圳科技园南区国际技术创新研究院C座4楼, 518057 Phone: 86-755-26996895 Fax: 86-755-26996830			
Title: MST5151 LCD TV Solution—MMG49X	Number:	Revision: Rev.A	Size: A3
File: 06_VCTI_AVinput.Sch	Brawn: Potato	Date: 2006-7-18	
Eng. Appr.:	Date:	Sheet 6 of 6	Printed Date/Time: 上午 09:11:26

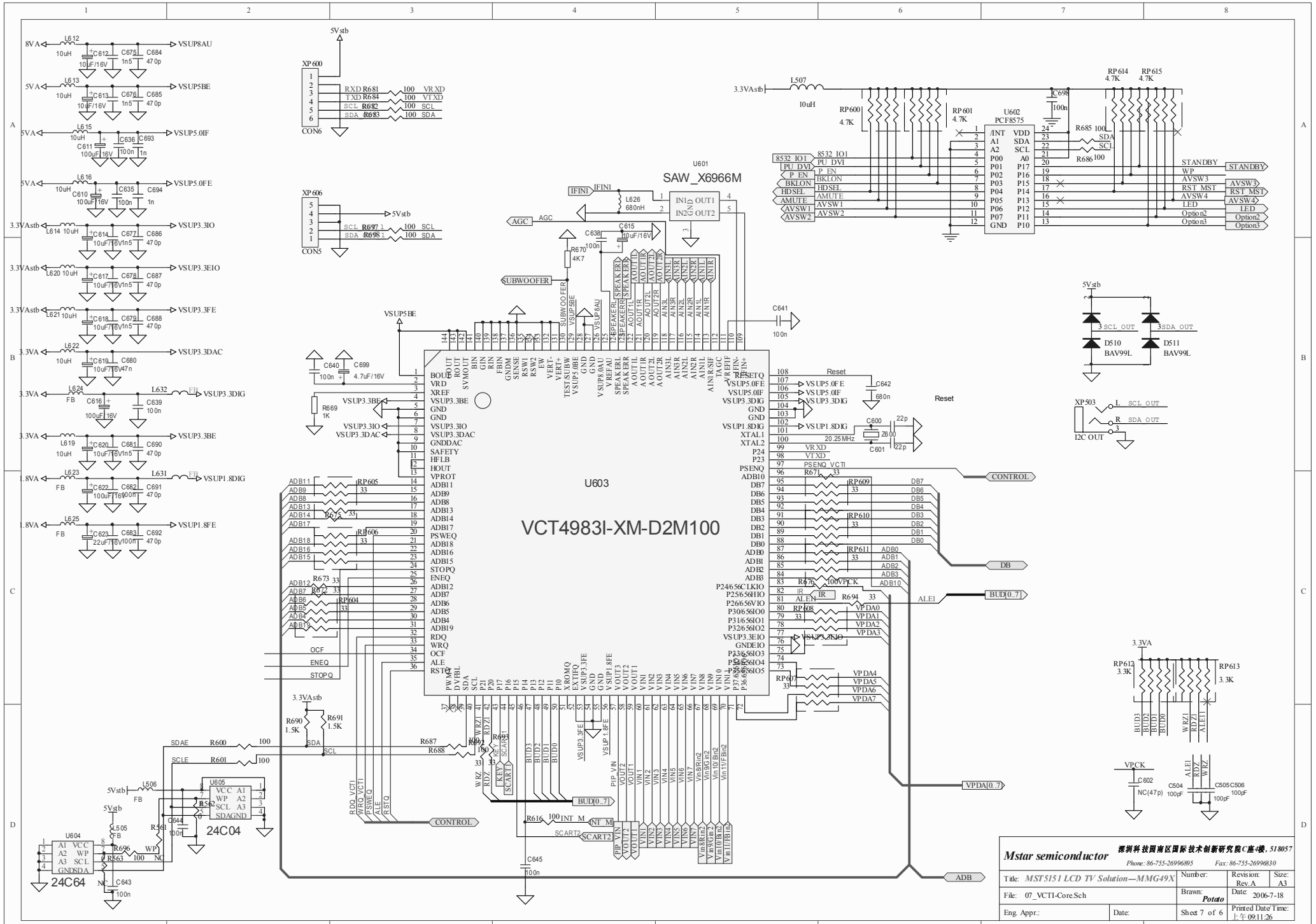
VCT4983I-XM-D2M100
U603
SAW_X6966M
U601
U602
PCF8575
U604
24C64
U605
24C04
XP600
CON6
XP606
CON5
XP503
I2C OUT
D510
BAV99L
D511
BAV99L
CONTROL
DB
BUD[0..7]
VPDA[0..7]
ADB
Mstar semiconductor
深圳科技园南区国际技术创新研究院C座4楼，518057
Phone: 86-755-26996895
Fax: 86-755-26996830
Title: MST5151 LCD TV Solution—MMG49X
Number:
Revision: Rev.A
Size: A3
File: 07_VCT1-Core.Sch
Brawn: Potato
Date: 2006-7-18
Eng. Appr.:
Date:
Sheet 7 of 6
Printed Date/Time: 上午 09:11:26

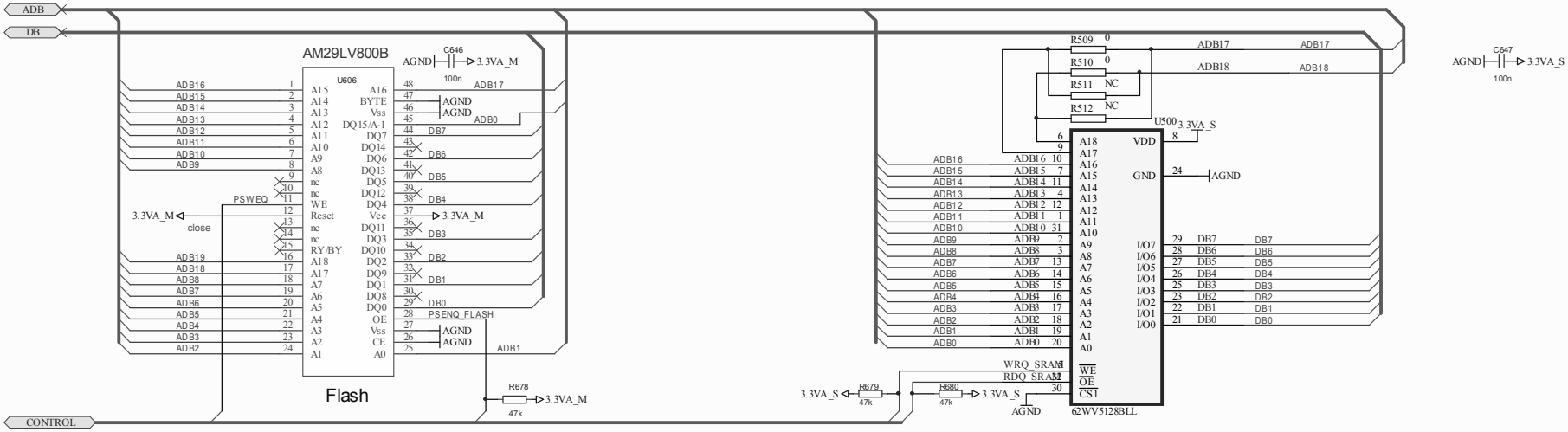

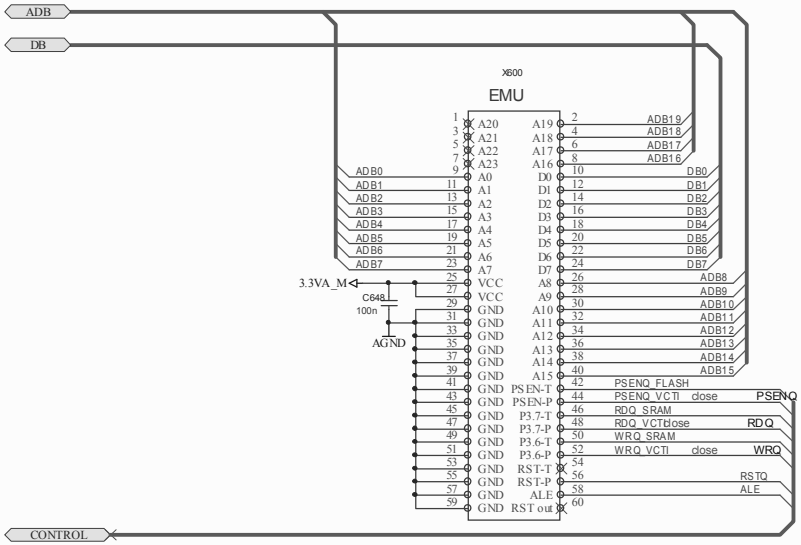

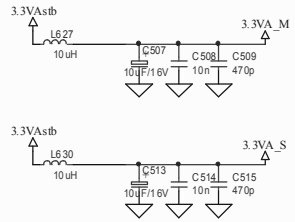

Mstar semiconductor
深圳科技园南区国际技术创新研究院C座4楼, 518057
Phone: 86-755-26996895 Fax: 86-755-26996830

Title: MST5151 LCD TV Solution—MMG49X		Number:	Revision: Rev.A / Size: A3
File: 08_VCTI-Memory-Interface.Sch		Brawn: Potato	Date: 2006-7-18
Eng. Appr.:	Date:	Sheet 8 of 6	Printed Date/Time: 上午 09:11:26

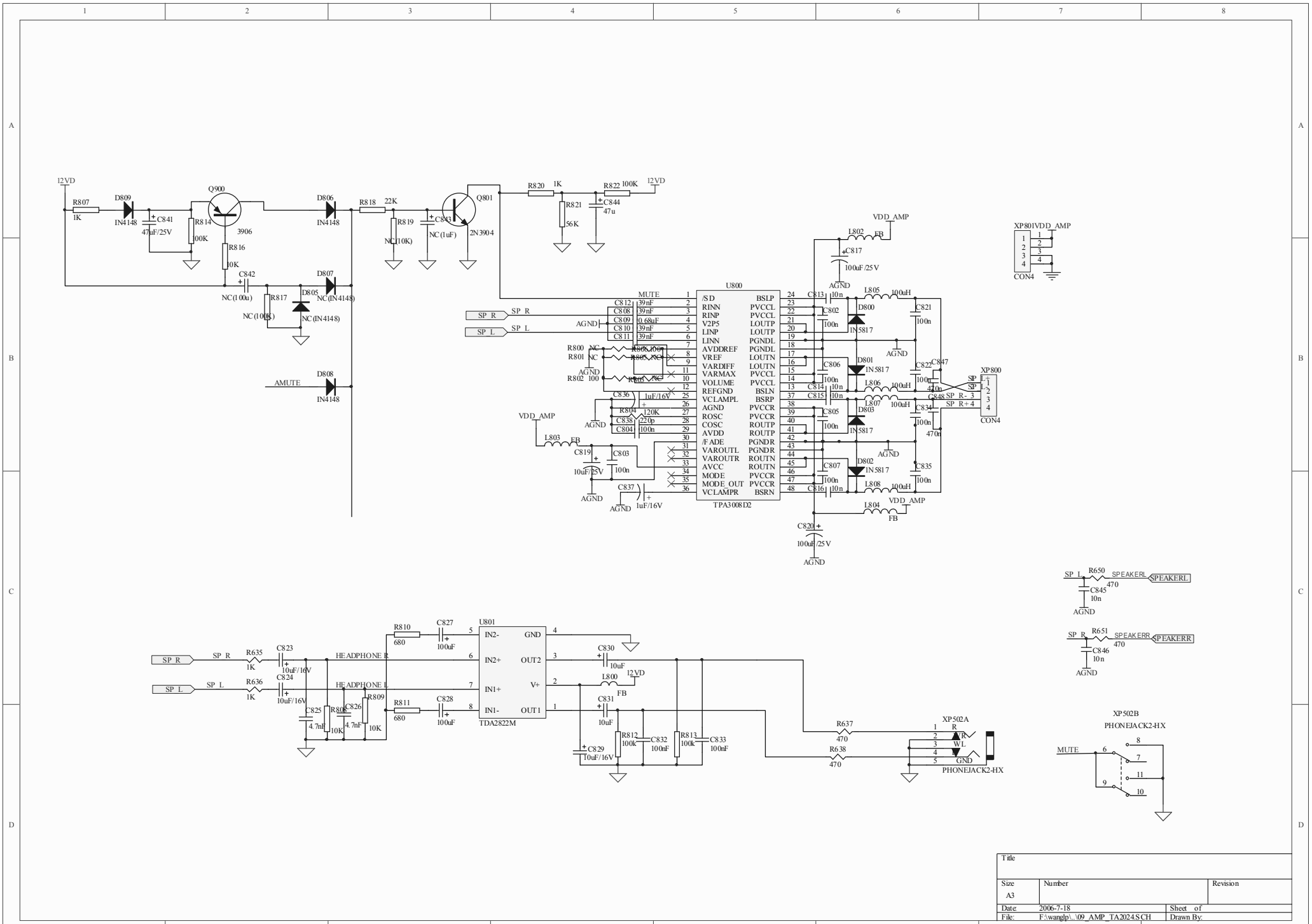

Title		
Size A3	Number	Revision
Date: 2006-7-18		Sheet of
File: F:\wanglp\...\09_AMP_TA2024.SCH		Drawn By: