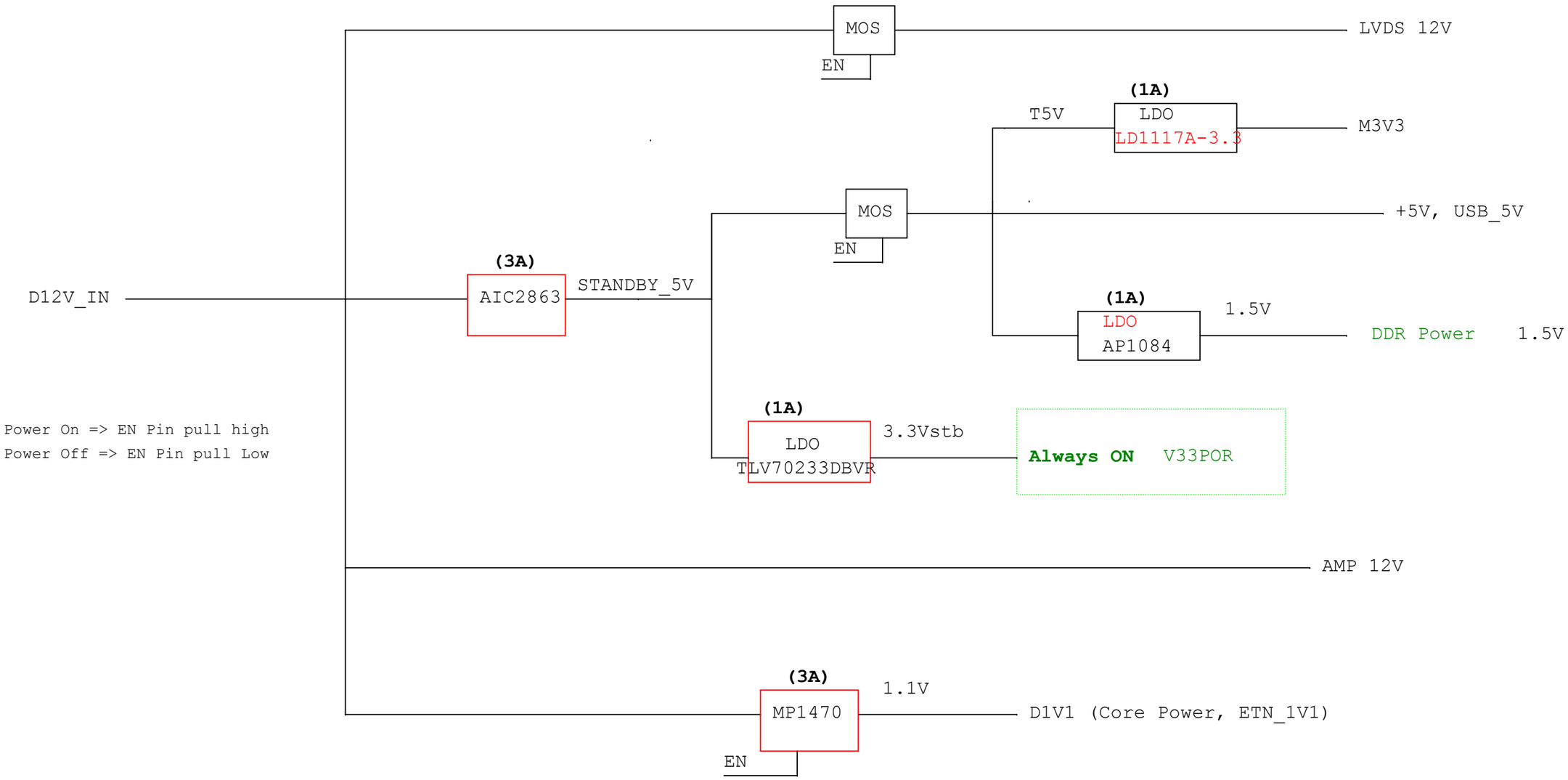


Power On => EN Pin pull high
Power Off => EN Pin pull Low

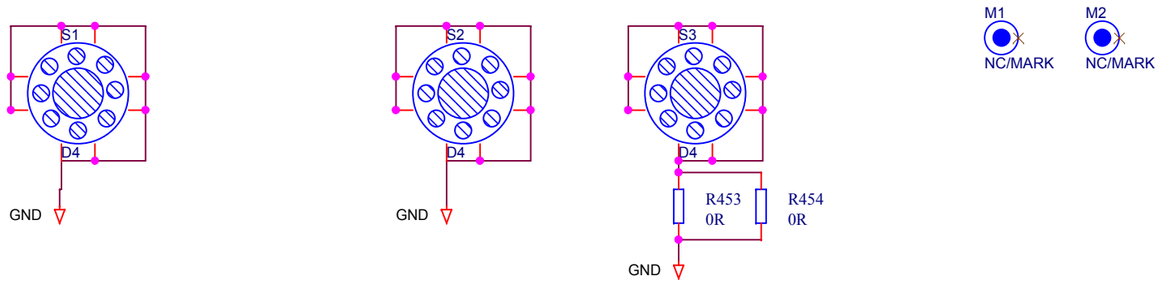


| | | | |
|---|---|---|---|
| Title | Power Tree | | |
| Size B | Document Number <Doc> | | Rev 1.0 |
| Date: Tuesday, December 31, 2013 | Sheet 1 of 10 | | |

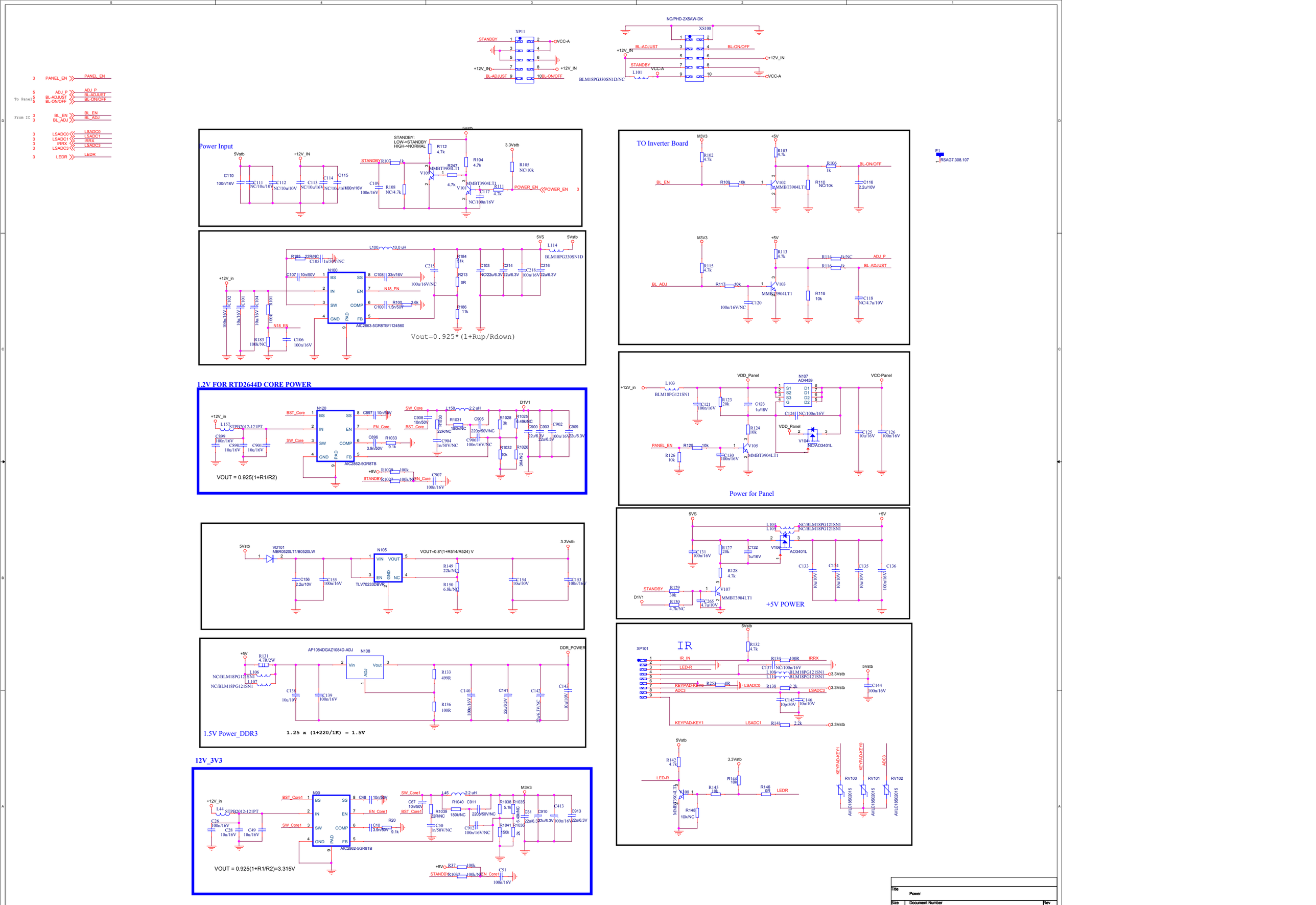
Power Input
TO Inverter Board
Power for Panel
+5V POWER
IR
1.2V FOR RTD2644D CORE POWER
VOUT = 0.925(1+R1/R2)
Vout=0.925*(1+Rup/Rdown)
1.5V Power_DDR3
1.25 x (1+220/1K) = 1.5V
12V_3V3
VOUT = 0.925(1+R1/R2)=3.315V
VOUT=0.8*(1+R514/R524) V
Title
Power
Size
Document Number
Rev
1.0
Date: Tuesday, December 31, 2013
Sheet 2 of 10

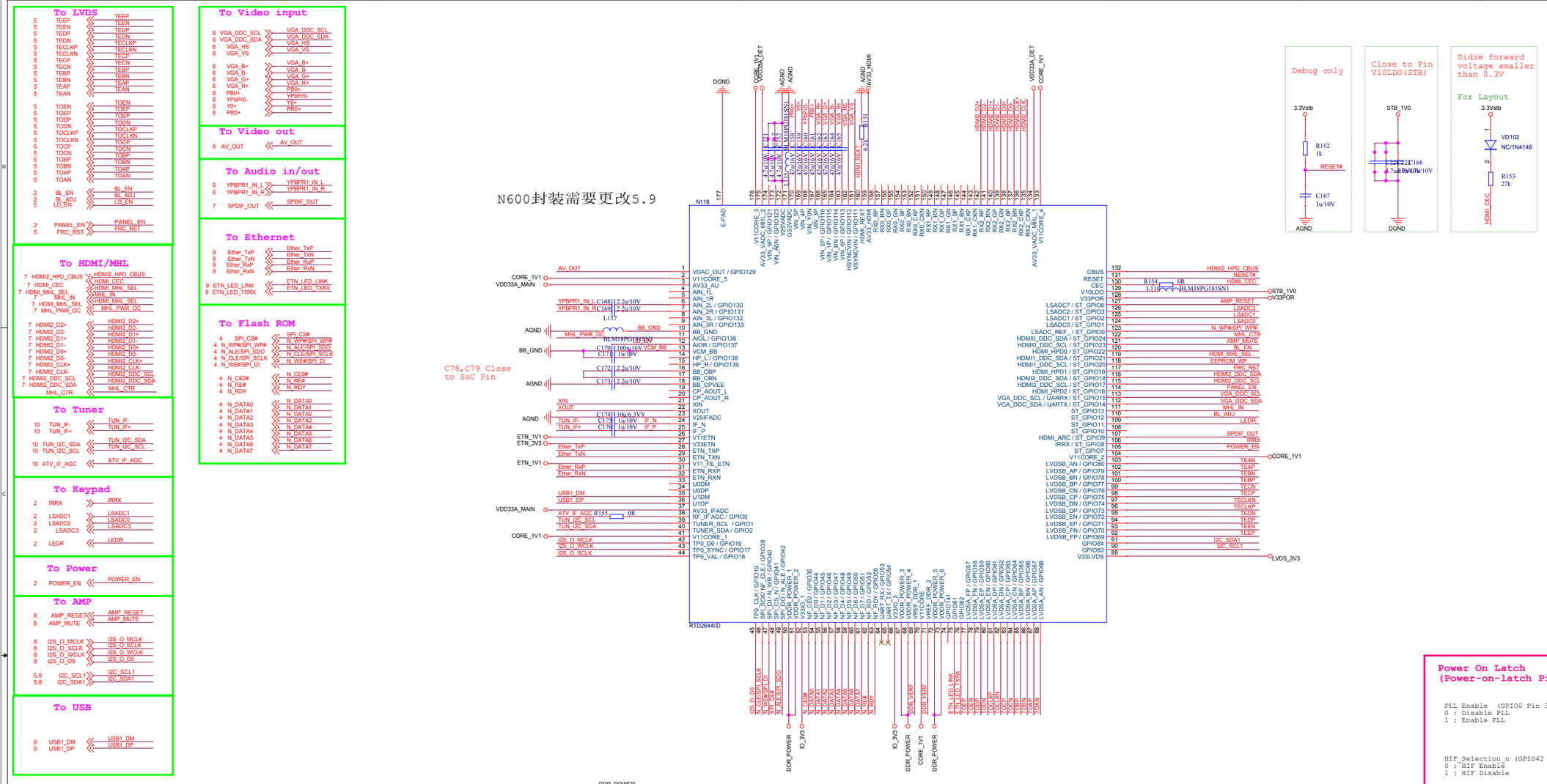


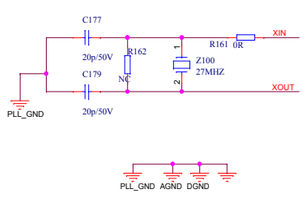


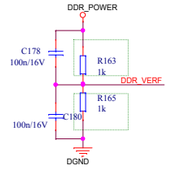


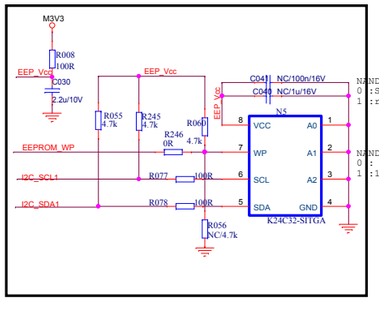


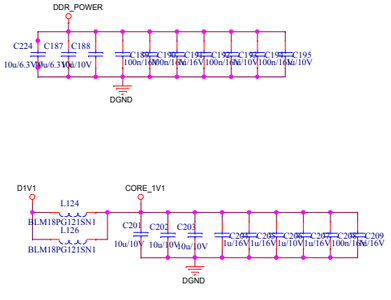


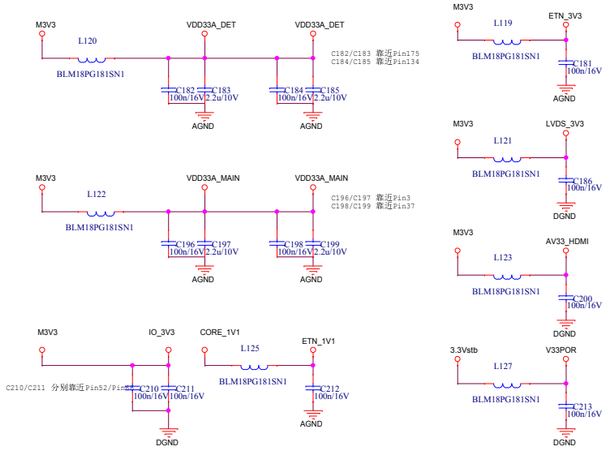





## Power On Latch
(Power-on-latch Pin don't use as input function)

| | | Default |
|---|---|---|
| PLL Enable (GPIO0 Pin 38)<br>0 : Disable PLL<br>1 : Enable PLL | ATV_IF_AGC | 1 |
| HIF_Selection_n (GPIO42 Pin 49)<br>0 : HIF Enable<br>1 : HIF Disable | N_ALE/SPI_SDO | 1 |
| EJTAG (STGPIO11 Pin 109)<br>0 : enable<br>1 : disable | AMP_MUTE | 1 |
| ROM boot (GPIO35 Pin 53)<br>0 : boot from ROM<br>1 : don't boot from ROM | N_CE0# | 0 |
| FLASH_TYPE_bit0 (GPIO45 Pin 55)<br>0 : NAND<br>1 : SPI | N_DATA1 | 1 |
| test mode (STGPIO7 Pin105)<br>0 : enable<br>1 : disable | POWER_EN | 1 |
| RANDOM_ACCESS_MODE (GPIO48 Pin 58)<br>0 : disable<br>1 : enable | N_DATA4 | 0 |
| ECC_bit0 (GPIO44 Pin 54)<br>0 : 6 bit<br>1 : 12 bit | N_DATA0 | 0 |
| PAGE_SIZE_bit0 (GPIO46 Pin 56) | N_DATA2 | 0 |
| PAGE_SIZE_bit1 (GPIO47 Pin 57)<br>0 : 2K<br>1 : 4K<br>2 : 8K | N_DATA3 | 0 |
| Reserved for debug (GPIO39 Pin46) | N_CLE/SPI_SCLK | |

| | |
|---|---|
| Title | Main Chip |
| Size | Custom |
| Document Number | <Doc> |
| Rev | 1.0 |
| Date: | Tuesday, December 31, 2013 |
| Sheet | 3 of 10 |

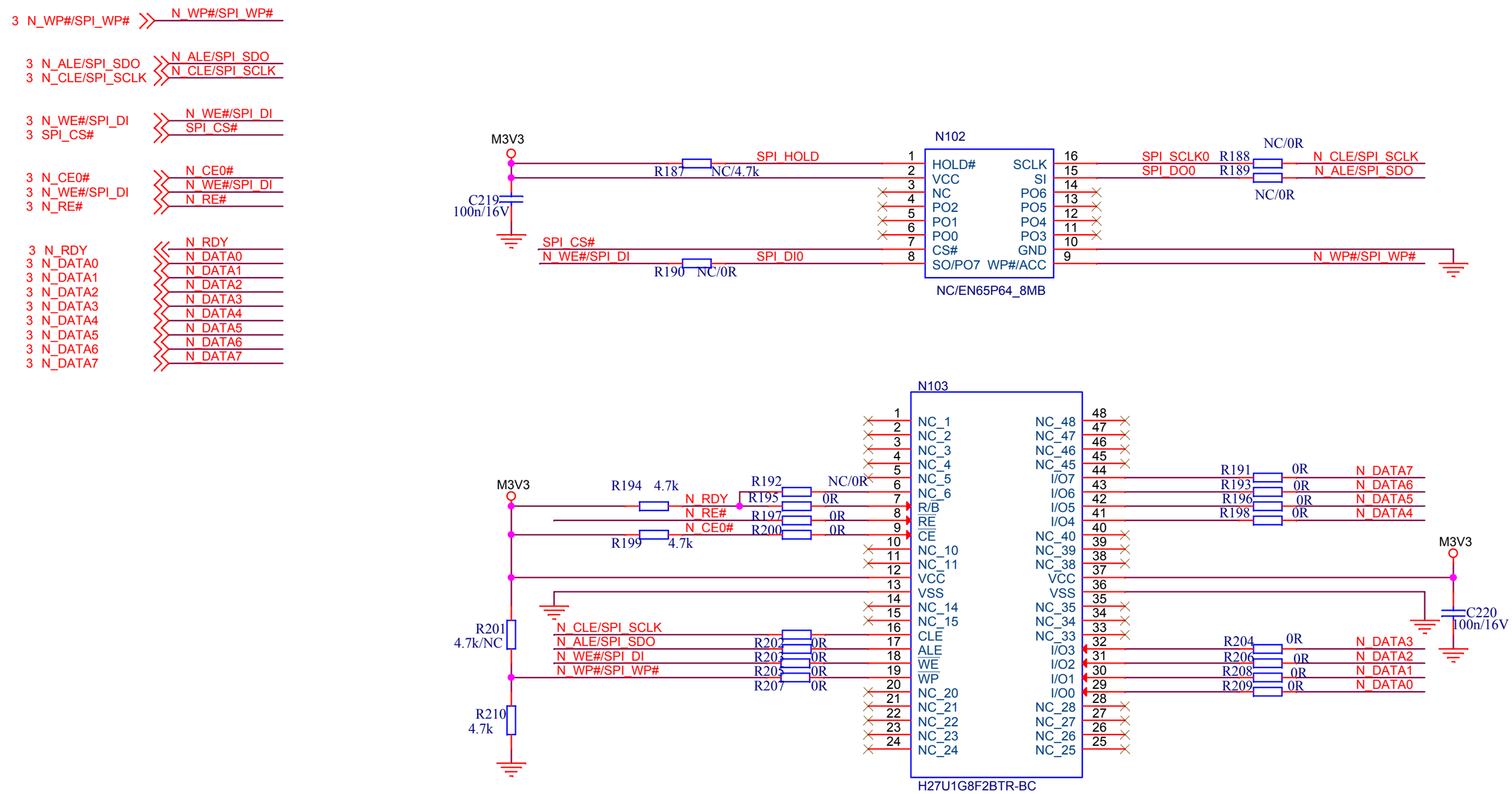


# Nand Flash

| | | |
|---|---|---|
| Title | SPI & NAND FLASH | |
| Size Custom | Document Number <Doc> | Rev 1.0 |
| Date: Tuesday, December 31, 2013 | Sheet 4 of 10 | |

插座物料号： 1113149

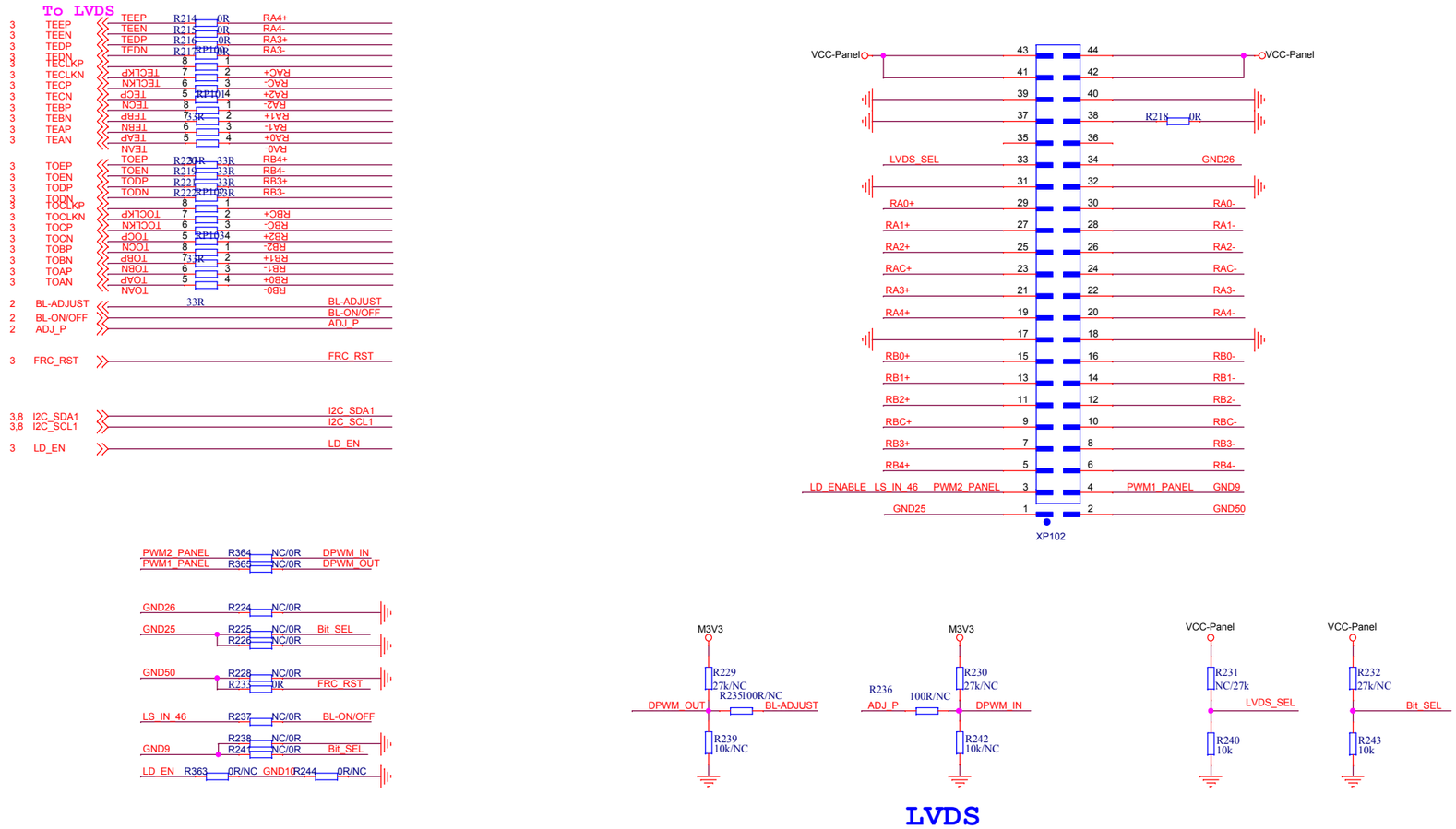


# LVDS

| | | | |
|---|---|---|---|
| Title | LVDS | | |
| Size C | Document Number <Doc> | | Rev 1.0 |
| Date: Tuesday, December 31, 2013 | Sheet 5 of 10 | | |

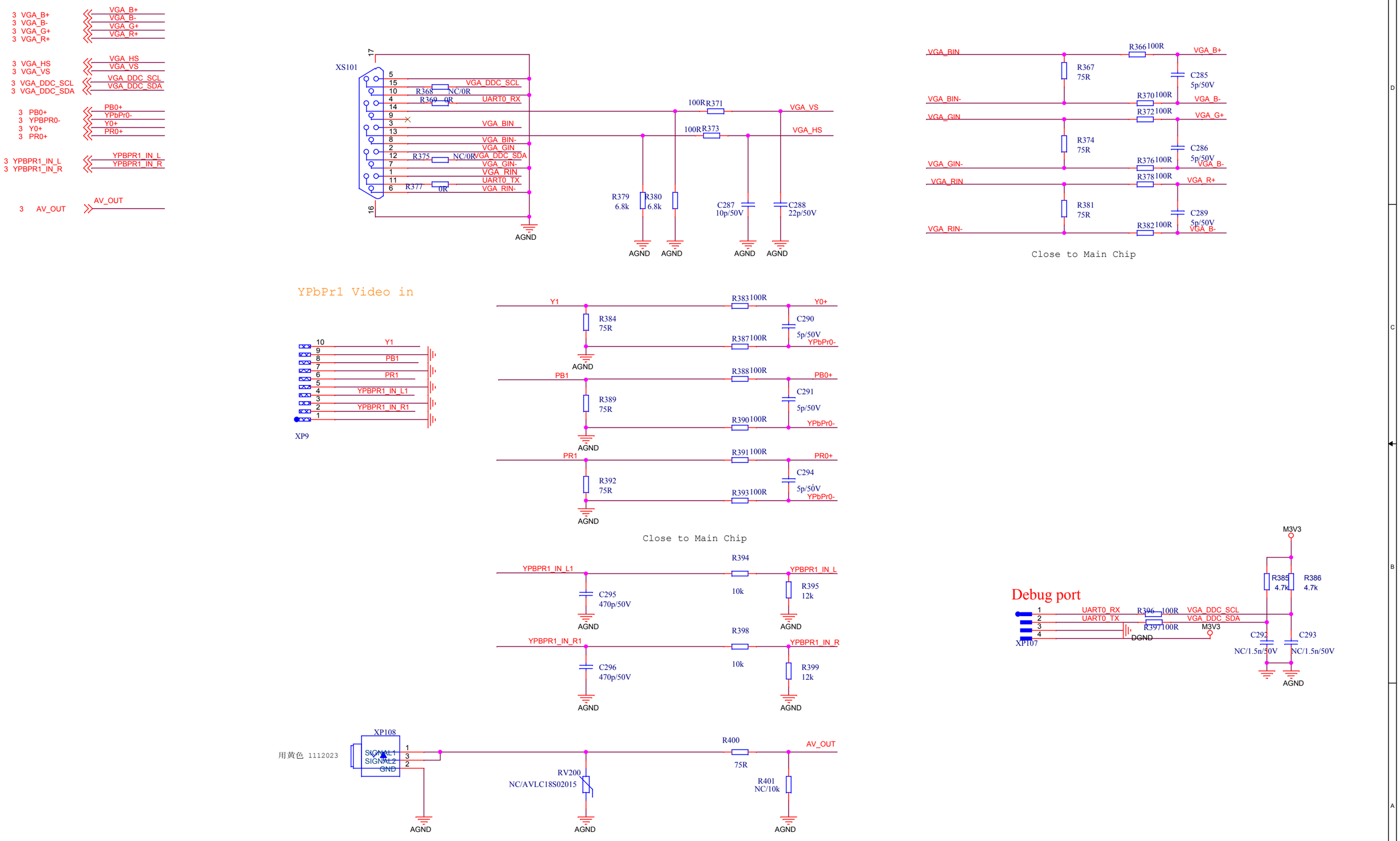


| | | | |
|---|---|---|---|
| Title | YPbPr | | |
| Size Custom | Document Number <Doc> | | Rev 1.0 |
| Date: Tuesday, December 31, 2013 | Sheet 6 of 10 | | |

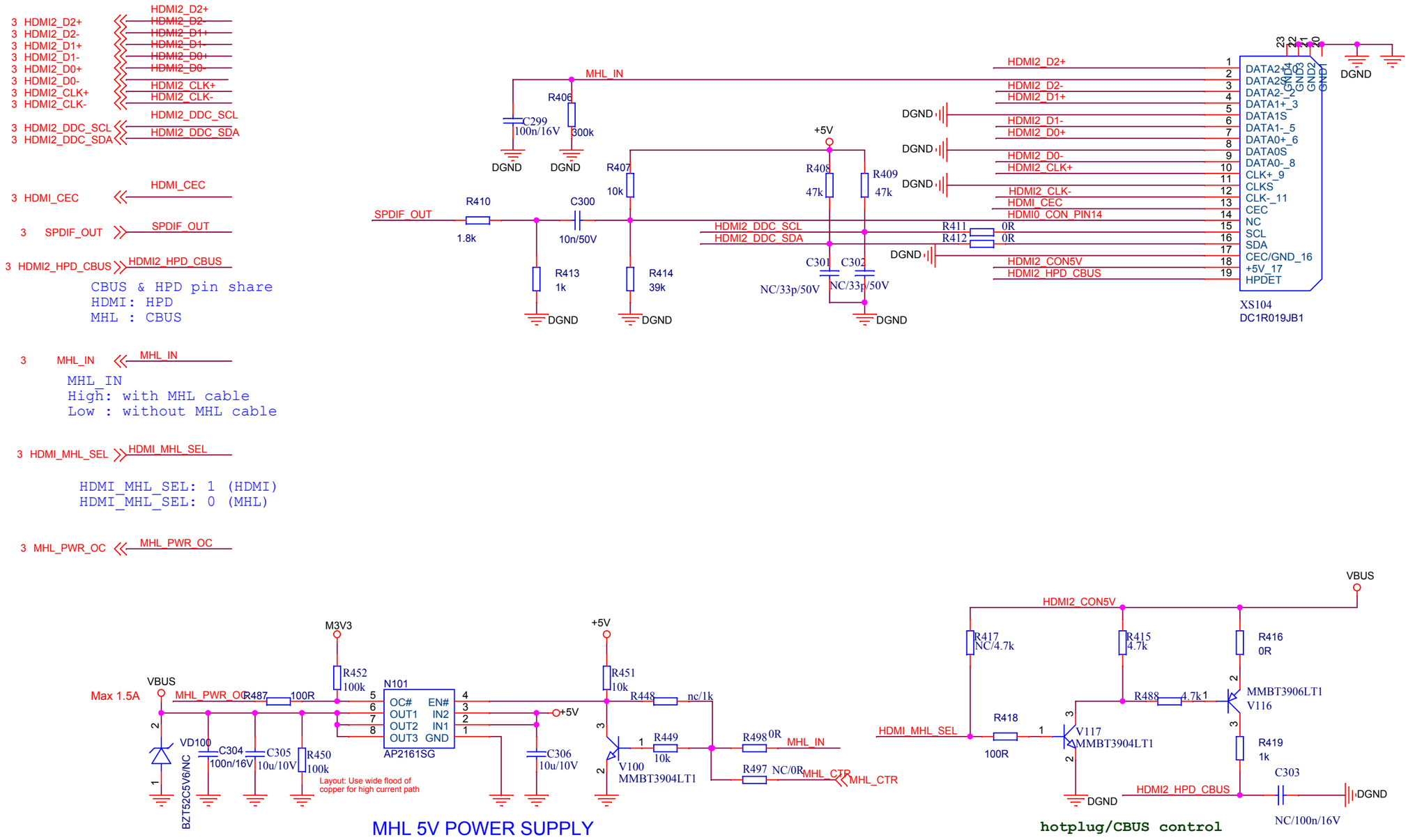





MHL 5V POWER SUPPLY




hotplug/CBUS control

| | | | |
|---|---|---|---|
| Title | HDMI | | |
| Size B | Document Number <Doc> | | Rev 1.0 |
| Date: Tuesday, December 31, 2013 | Sheet 7 of 10 | | |

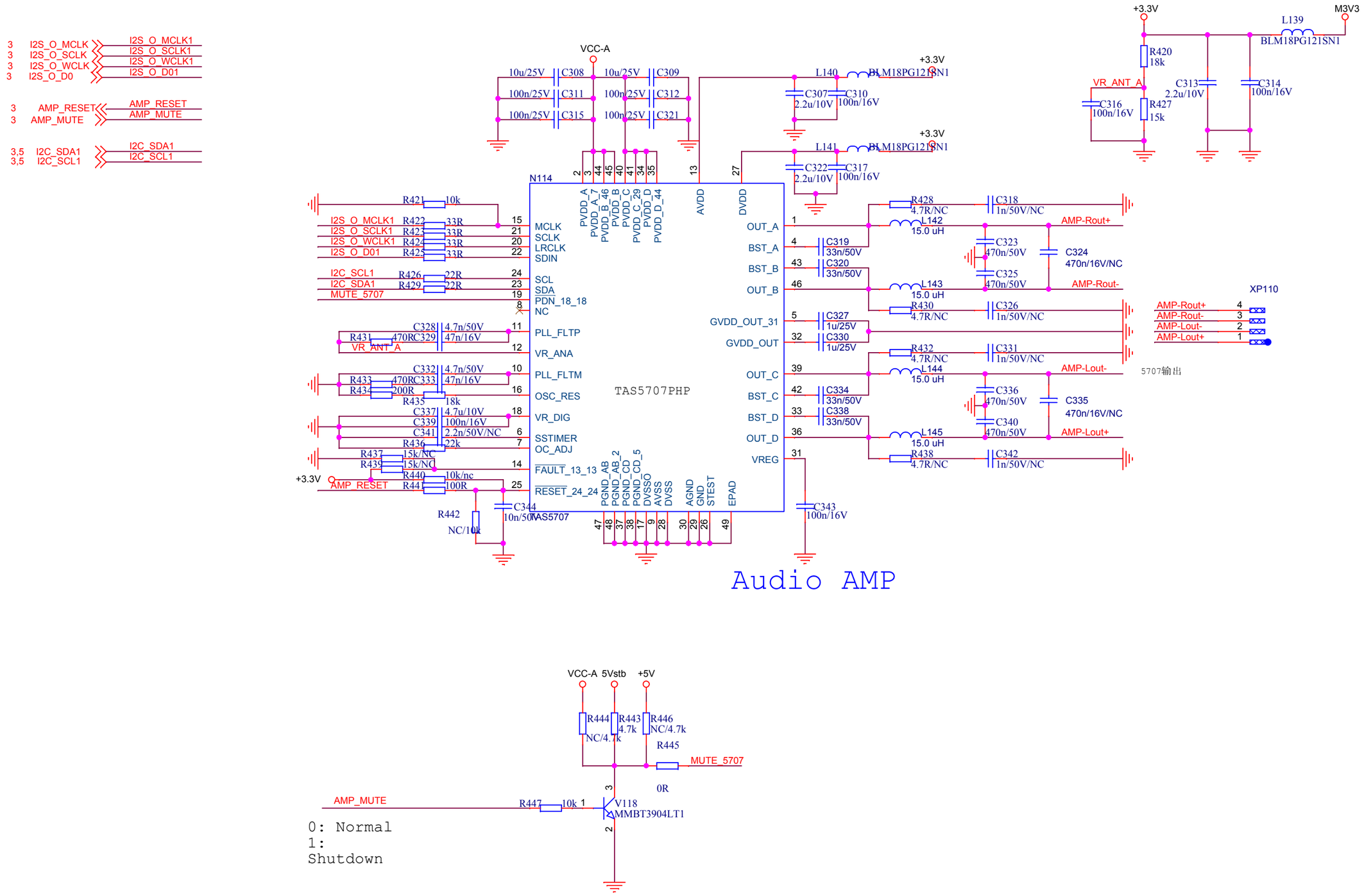


# Audio AMP




| | | | | | |
|---|---|---|---|---|---|
| Title | AUDIO AMP | | | | |
| Document Number | | | | | |
| Size Custom | Design | Check Check of name | Auditing Auditing of name | Modify Rev Modify Rev | Rev 00.00 |
| Date: Tuesday, December 31, 2013 | | | Sheet 8 of 10 | | |

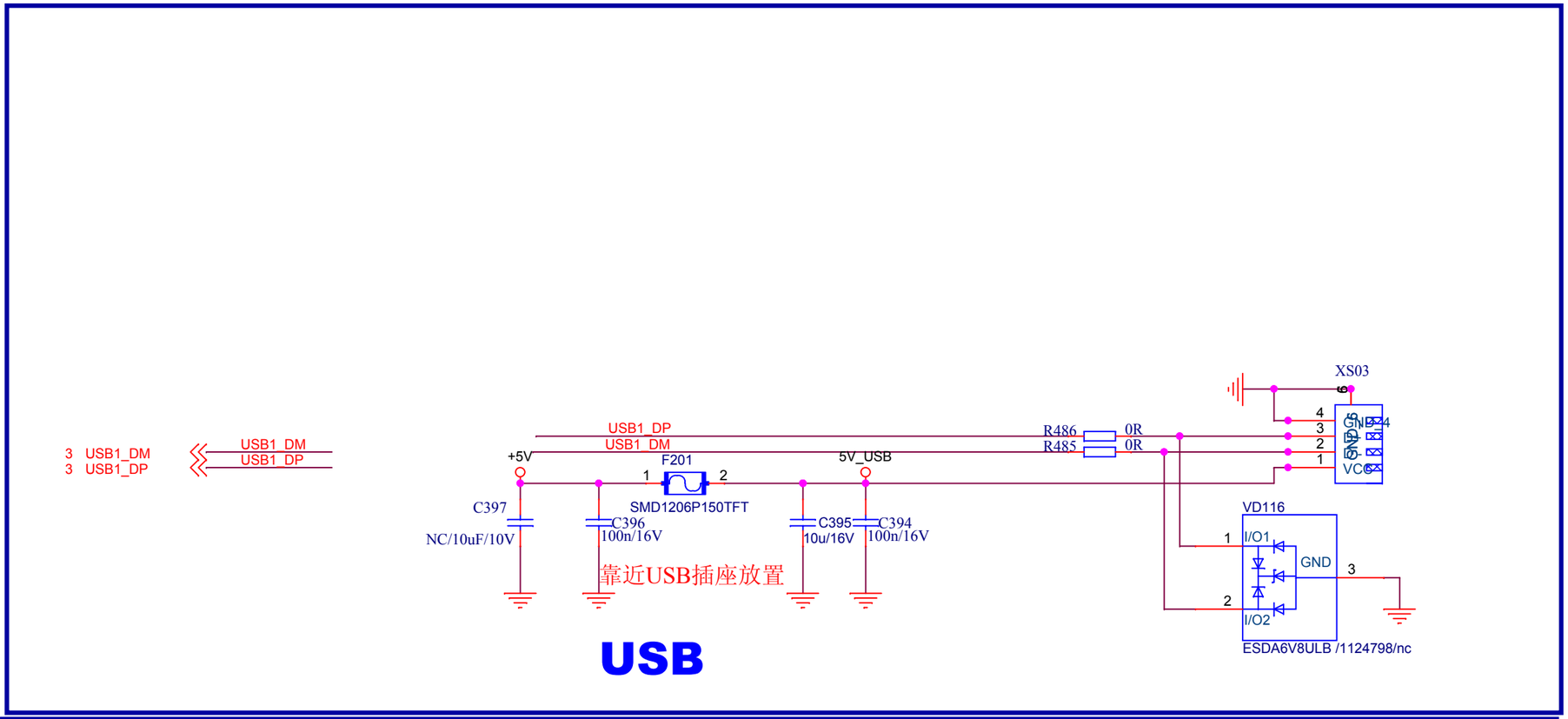


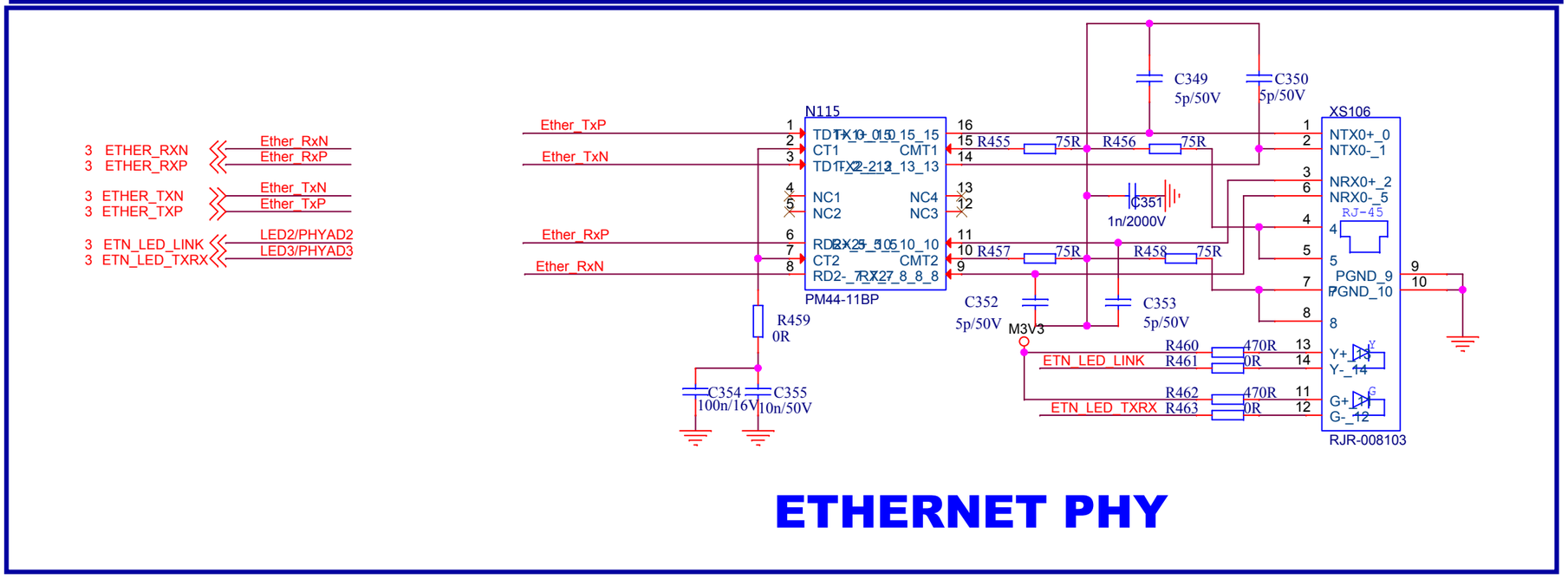


| | | |
|---|---|---|
| Title | USB 2.0 | |
| Size Custom | Document Number <Doc> | Rev 1.0 |
| Date: Tuesday, December 31, 2013 | Sheet 9 of 10 | |

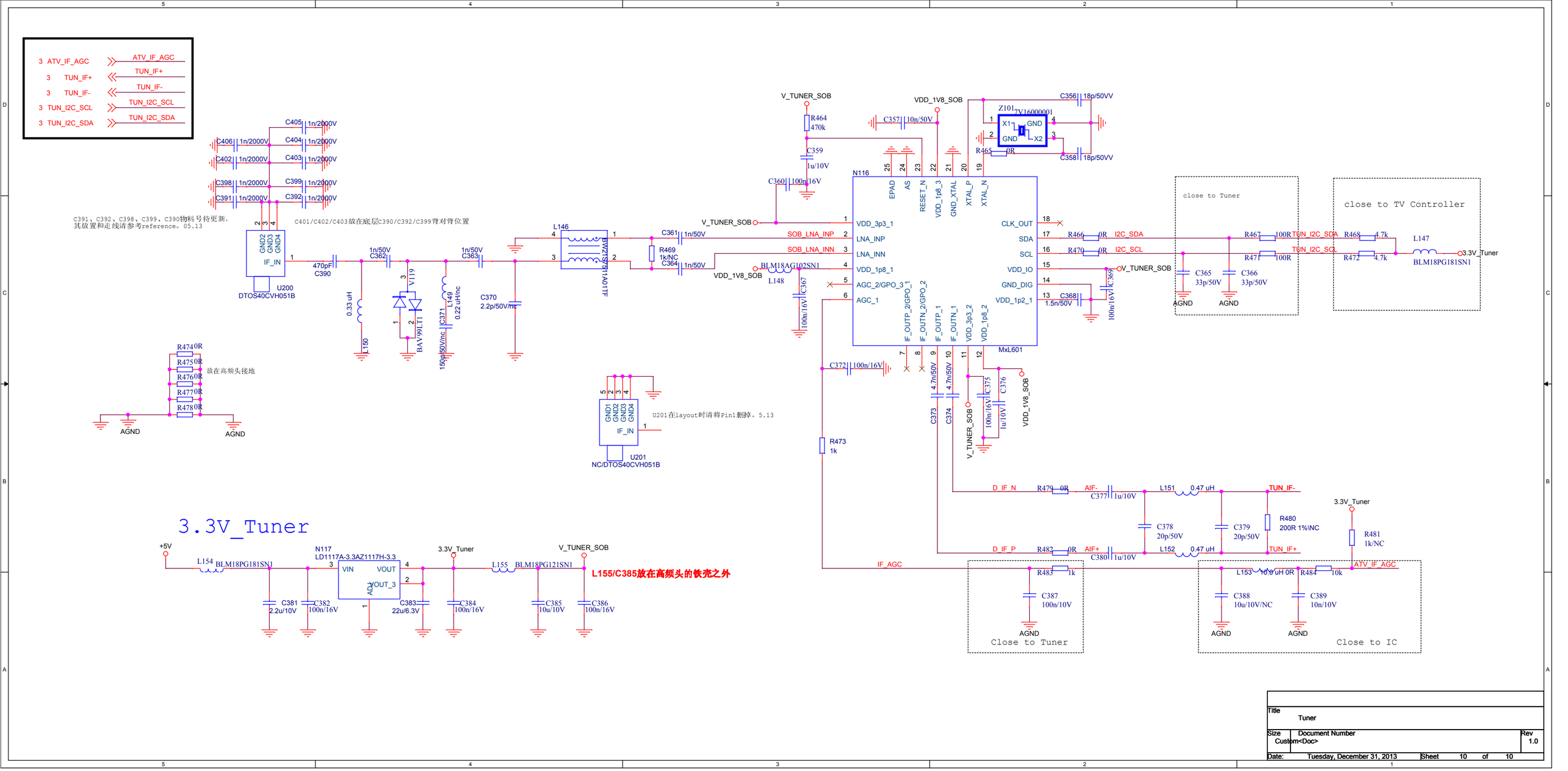


| | |
|---|---|
| Title | Tuner |
| Size | Custom<Doc> |
| Document Number | |
| Rev | 1.0 |
| Date: | Tuesday, December 31, 2013 |
| Sheet | 10 of 10 |