MT5301C (128M*8bit DDR3) VERSION V1.0

Dram	
DRAM Type	DDR3
Single DRAM Chip Size	2G bit(128M*8*2)
DRAM Chip Data Rate SPEC	1333MHz
Number of DRAM	200%
Flash	
First Serial Flash	64Mbit
NAND Flash	2Gbit
Tuner	
Tuner Type	DTMB
Tuner 30V PWM (O)	NA
RF_AGC (I)	NA
RF_AGC (O)	RF_AGC
IF_AGC (O)	IF_AGC
IF_AGC_SW	JTDO
AFT (I)	NA
External Demod/TS	
DEMOD_TSCLK	DEMOD_TSCLK
DEMOD_TSData	DEMOD_TSData
DEMOD_TSSYNC	DEMOD_TSSYNC
DEMOD_TSVAL	DEMOD_TSVAL
Demod_RST	Demod_RST
Panel CTRL	
LVDS Power Switch CTRL (O)	CI_INT
LVDS Status CTRL_0 (O)	NA
LVDS Status CTRL_1 (O)	NA
Back Light CTRL (O)	SPI_CLE
Dimming CTRL (O)	OPWM0
EEPROM WP	
SYS EEPROM WP (O)	GPIO14 (H=Write Protect)
SYS EEPROM Size	32Kbit
USB GPIO	
USB0 PWR Enable (O)	NA
USB0 Over Current (I)	NA
USB1 PWR Enable (O)	NA
USB1 Over Current (I)	NA
HDMI CTRL	
HDMI HPD1 (O)	HDMI_HPD (L= EEPROM vailable)
HDMI HPD2 (O)	OPCTRL4
HDMI HPD3 (O)	OPCTRL5
HDMI HPD4 (O)	NA
HDMI_5V_Detect 1 (I)	PWR5V (H= Plug-In)
HDMI_5V_Detect 2 (I)	ADIN2
HDMI_5V_Detect 3 (I)	ADIN3
HDMI_5V_Detect 4 (I)	NA
HDMI_SCL1	HDMI_SCL
HDMI_SCL2	OPCTRL0
HDMI_SCL3	OPCTRL2
HDMI_SDA1	HDMI_SDA
HDMI_SDA2	OPCTRL1
HDMI_SDA3	OPCTRL3
Audio Input Source	
AIN0	Exernal MUX input chip
Exernal MUX CTRL0	JTMS
Exernal MUX CTRL1	JTCK
Exernal MUX CTRL2	AOSDATA1
Audio DAC Out	
Audio DAC0 (PWM0)	AV Audio Out
Audio DAC1 (PWM1)	Headphone out

I2S Out	
I2S MCLK(O)	AOMCLK
I2S BCLK(O)	AOBCK
I2S LRCK(O)	AOLRCK
I2S DATA0(O)	AODATA0 (Speaker Out)
Audio CTRL	
All_MUTE_CTRL (O)	ADIN4 (H = UN-MUTE)
Head Phone DET (I)	SPI_DATA(L = Plug-In)
SPDIF IN (I)	NA
Speaker Amp CTRL	
Speaker AMP Type	AD82581B (Digital SP AMP)
Speaker Amp Mute (O)	JTRST (L =MUTE)
AV Input Source	
CVBS0	CVBS0P
CVBS1	SC0
CVBS2	SY1
SY0	CVBS1P
SC0	SY0
SY1	NA
SC1	NA
YPbPr Intput Source	
SOY0	SOY0
Y0P	Y0P
PB0P	PB0P
PR0P	PR0P
SOY1	SOY1
Y1P	Y1P
PB1P	PB1P
PR1P	PR1P
Video Out	
SCT Monitor CVBS Out	VDAC_OUT1
SCT TV CVBS Out	NA
Other	
OPWRSB (O)	OPWRSB (L=PWR On)
VCXO CTRL (O)	NA
Ethernet Port (MII/RMII)	***RMII***
TXEN	TXEN
TXD0	TXD0
TXD1	TXD1
TXD2	NA
TXD3	NA
TXCLK	TXCLK
COL	COL
RXDV	RXDV
RXD0	RXD0
RXD1	RXD1
RXD2	NA
RXD3	NA
RXCLK	RXCLK
PHY_REF_CLK	PHY_REF_CLK
MDC	MDC
MDIO	MDIO
PHY RESET#	SPI_CLK

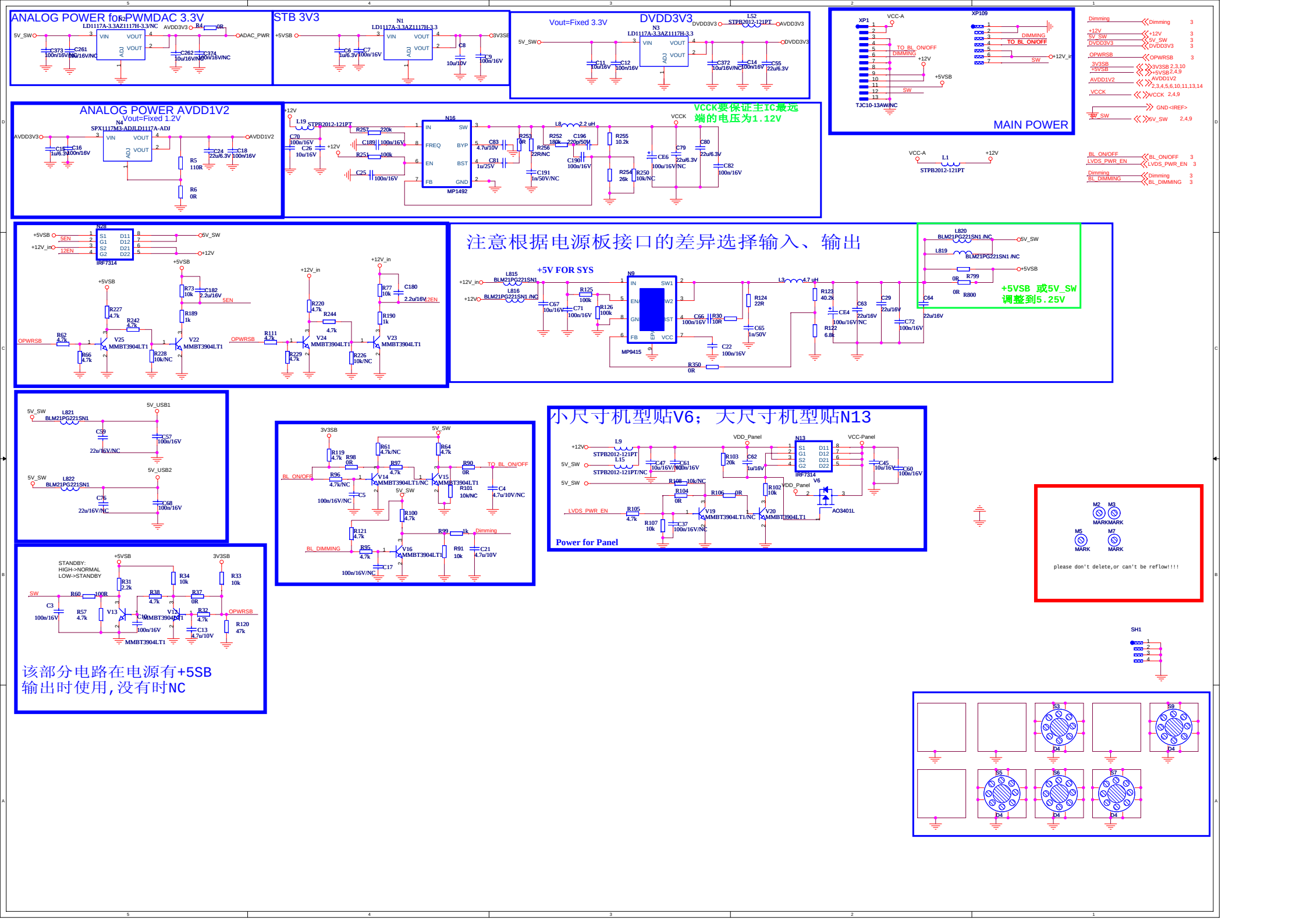
ANALOG POWER for PWMDAC 3.3V
LD1117A-3.3AZ1117H-3.3/NC
STB 3V3
LD1117A-3.3AZ1117H-3.3
Vout=Fixed 3.3V
DVDD3V3
LD1117A-3.3AZ1117H-3.3
MAIN POWER
ANALOG POWER AVDD1V2
Vout=Fixed 1.2V
SPX1117M3-ADJ/LD1117A-ADJ
VCCK要保证主IC最远端的电压为1.12V
MP1492
注意根据电源板接口的差异选择输入、输出
+5V FOR SYS
MP9415
+5VSB 或5V_SW 调整到5.25V
小尺寸机型贴V6；大尺寸机型贴N13
Power for Panel
该部分电路在电源有+5SB输出时使用，没有时NC
please don't delete,or can't be reflow!!!!

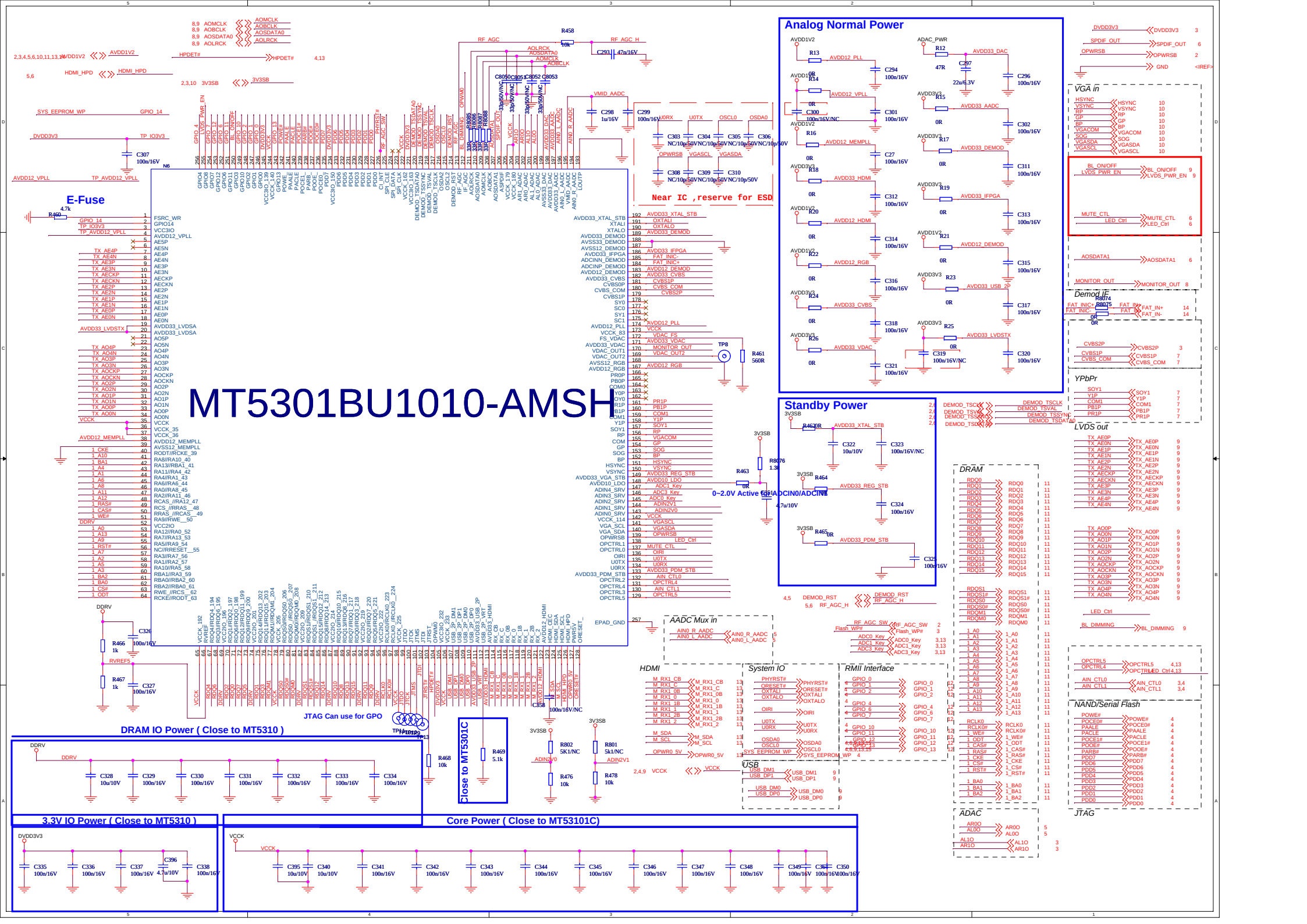
MT5301BU1010-AMSH
Analog Normal Power
Standby Power
E-Fuse
Near IC ,reserve for ESD
0~2.0V Active ADC1/ADCIN0/ADCIN0
AADC Mux in
HDMI
System IO
RMII Interface
USB
DRAM
ADAC
JTAG
NAND/Serial Flash
VGA in
Demod IF
YPbPr
LVDS out
JTAG Can use for GPO
DRAM IO Power (Close to MT5310)
3.3V IO Power (Close to MT5310)
Core Power (Close to MT53101C)
Close to MT5301C

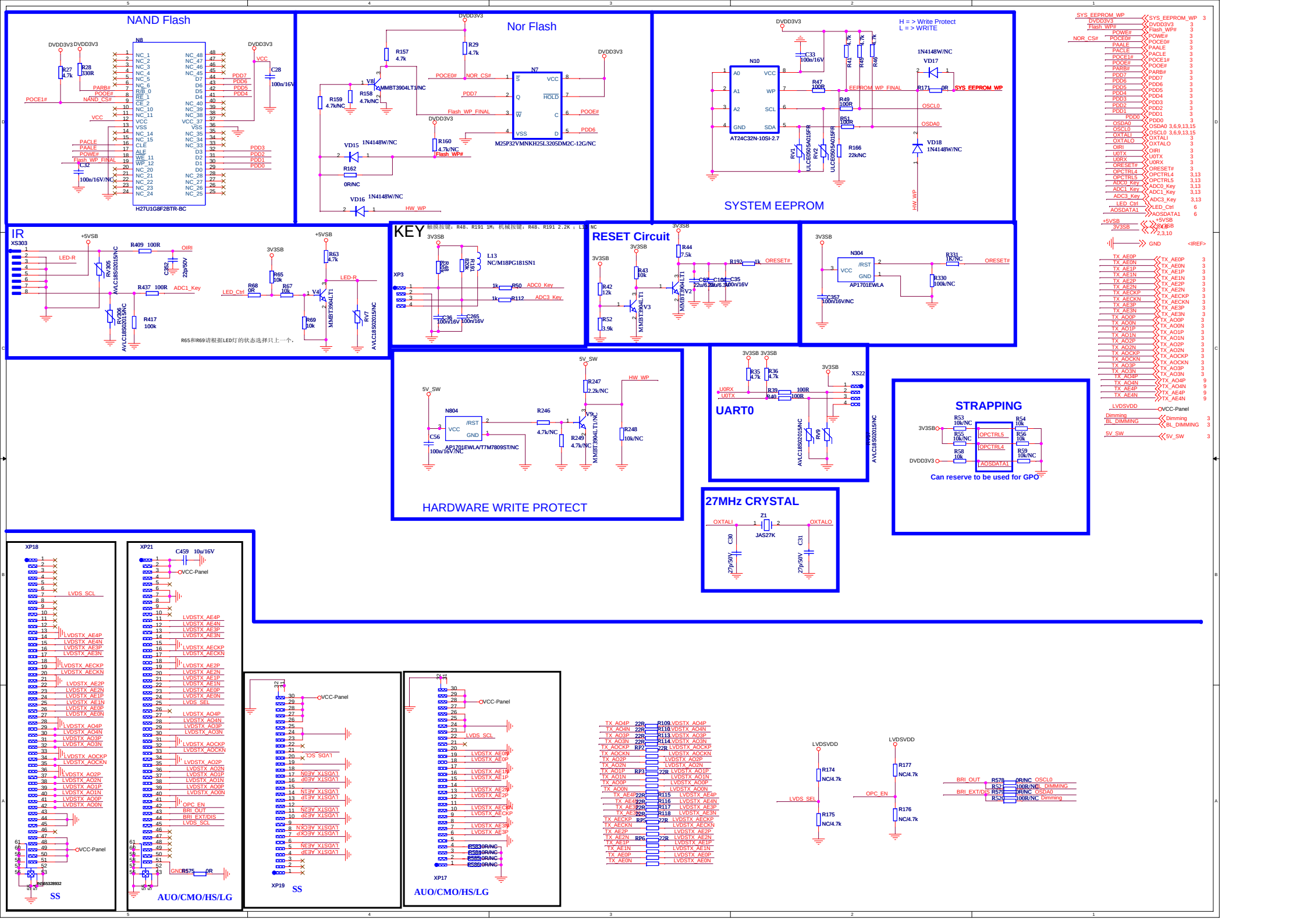
NAND Flash
N8
H27U1G8F2BTR-BC
Nor Flash
N7
M25P32VMNKH25L3205DM2C-12G/NC
SYSTEM EEPROM
H = > Write Protect
L = > WRITE
N10
AT24C32N-10SI-2.7
IR
XS303
R409 100R
R437 100R
ADC1_Key
LED-R
LED_Ctrl
KEY
触摸按键：R48、R191 1M；机械按键：R48、R191 2.2K；L13 NC
XP3
ADC0_Key
ADC3_Key
RESET Circuit
ORESET#
N304
AP1701EWLA
UART0
XS22
STRAPPING
Can reserve to be used for GPO
HARDWARE WRITE PROTECT
N804
AP1701EWLA/T7M7809ST/NC
27MHz CRYSTAL
Z1
JAS27K
OXTALI
OXTALO
XP18
XP21
XP19
XP17
SS
AUO/CMO/HS/LG
LVDSVDD
LVDS_SEL
OPC_EN
BRI_OUT
BRI_EXT/DIS
VCC-Panel

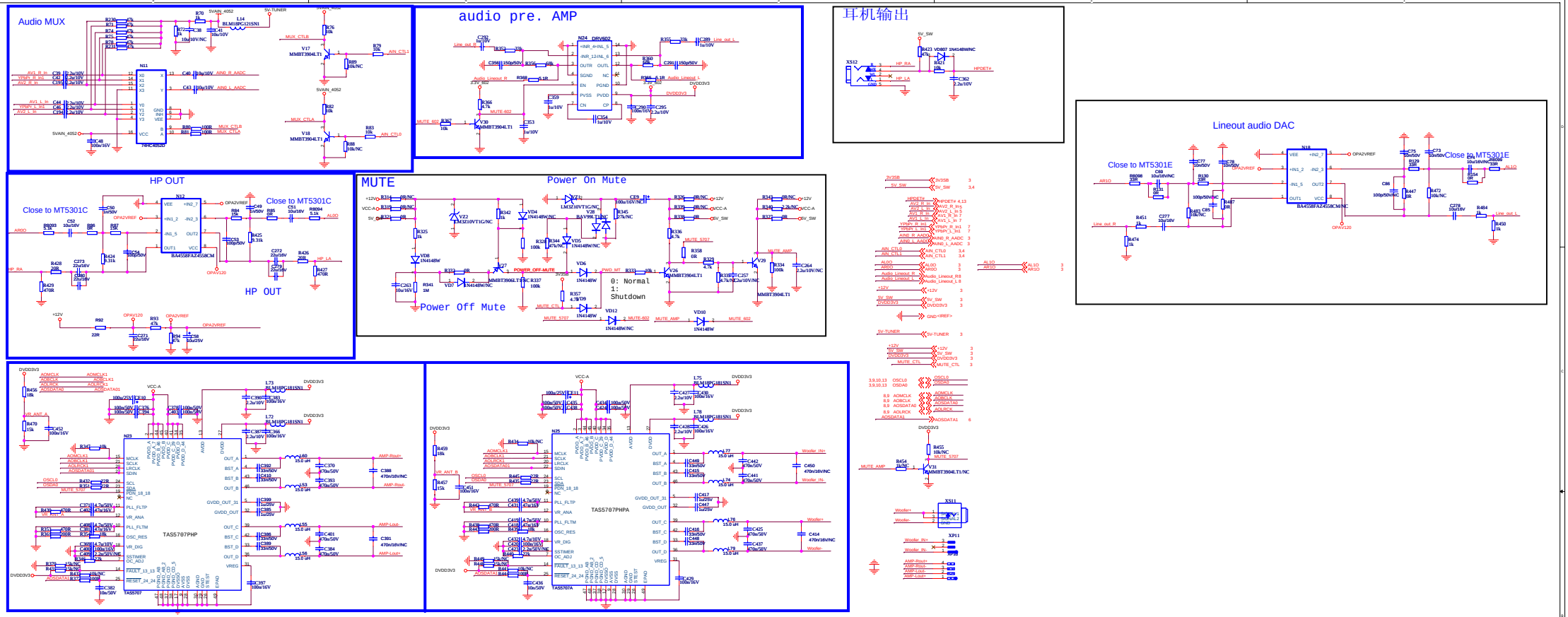

Audio A-in/Line-out

Frank Chi

MEDIATEK

MediaTek Inc. No.1-2, Innovation Rd 2, SBIP, Hsin-Chu City 300 TEL:(03)567-0766 FAX:(03)578-7810

Size	Document Number	Rev
	MT5301C	
Date: 5 14	Sheet 6f	

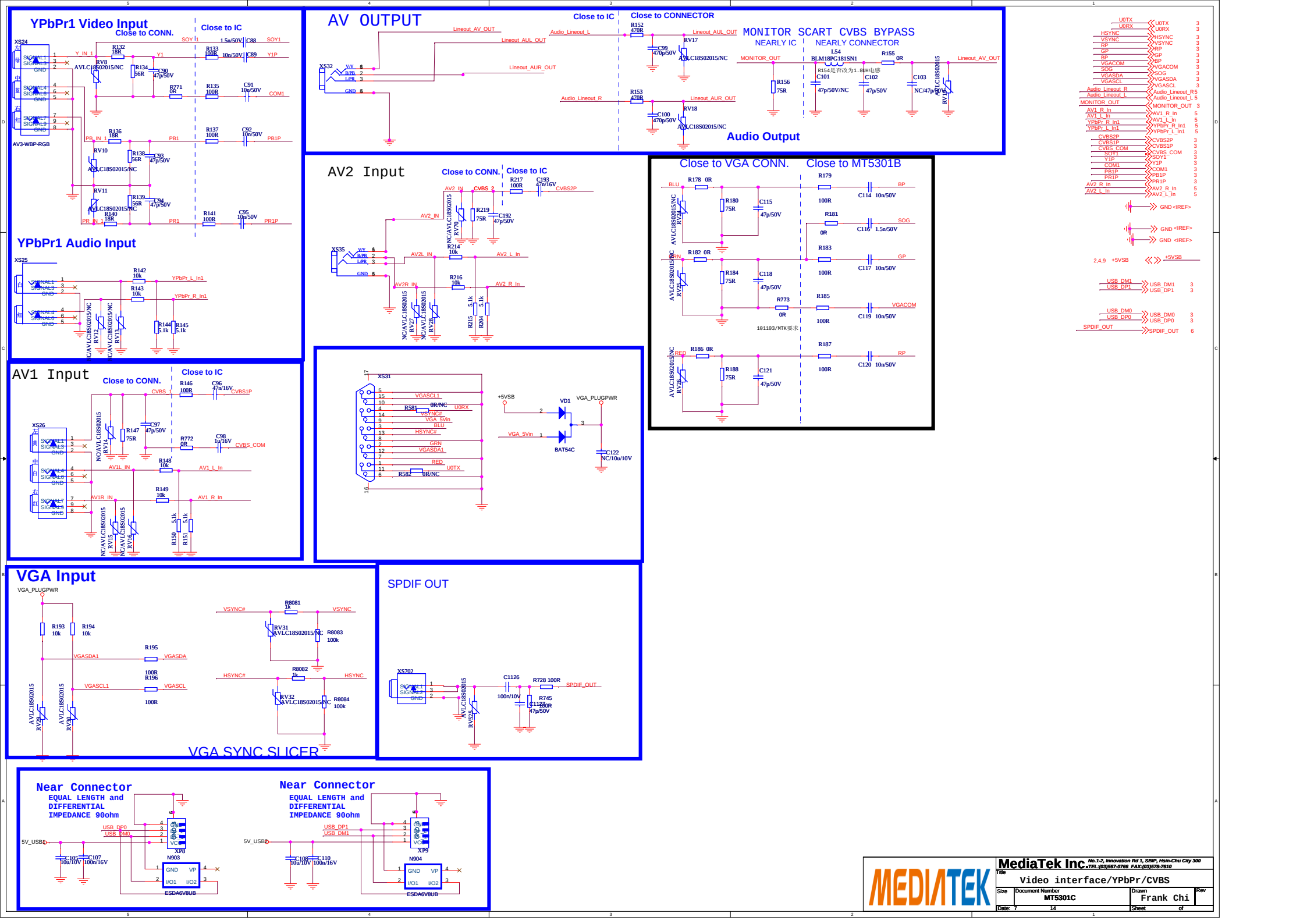
YPbPr1 Video Input
Close to CONN.
Close to IC
XS24
AV3-WBP-RGB
YPbPr1 Audio Input
XS25
AV1 Input
XS26
AV2 Input
XS35
AV OUTPUT
XS32
Close to IC
Close to CONNECTOR
MONITOR SCART CVBS BYPASS
NEARLY IC
NEARLY CONNECTOR
Audio Output
Close to VGA CONN.
Close to MT5301B
XS31
VGA Input
VGA_PLUGPWR
VGA SYNC SLICER
SPDIF OUT
XS702
Near Connector
EQUAL LENGTH and DIFFERENTIAL IMPEDANCE 90ohm
XP8
XP9
N903
N904
ESDA6V8UB
MediaTek Inc
Video interface/YPbPr/CVBS
MT5301C
Frank Chi

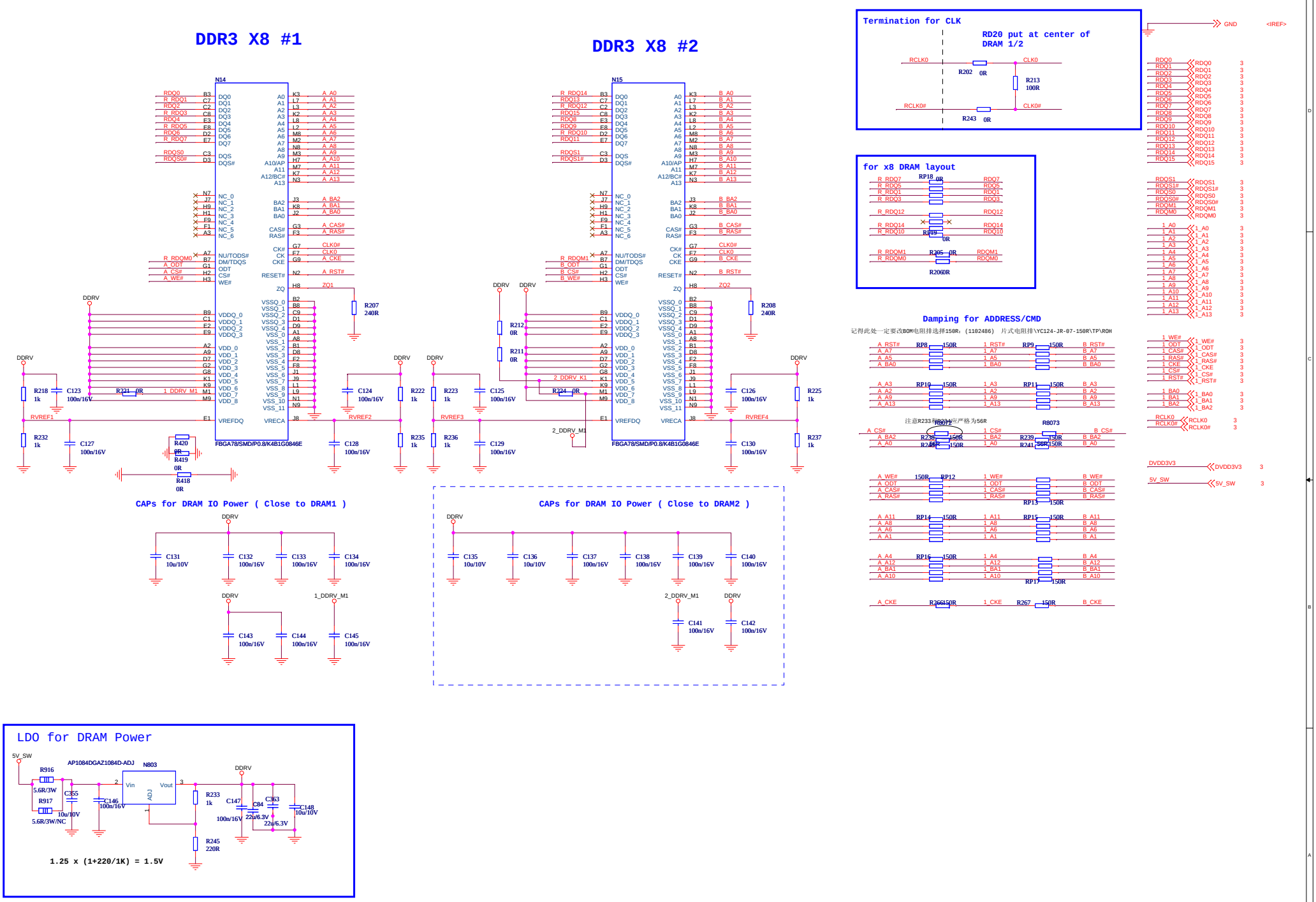
DDR3 X8 #1
DDR3 X8 #2
N14
N15
FBGA78/SMD/P0.8/K4B1G0846E
Termination for CLK
RD20 put at center of DRAM 1/2
RCLK0
CLK0
RCLK0#
CLK0#
R202 0R
R213 100R
R243 0R
GND
<IREF>
for x8 DRAM layout
Damping for ADDRESS/CMD
记得此处一定要改BOM电阻排选择150R: (1102486) 片式电阻排YC124-JR-07-150R\TP\ROH
注意R233和R234实产格为56R
CAPs for DRAM IO Power (Close to DRAM1)
CAPs for DRAM IO Power (Close to DRAM2)
LDO for DRAM Power
AP1084DGAZ1084D-ADJ
N803
1.25 x (1+220/1K) = 1.5V
MediaTek Inc
No.1-2, Innovation Rd 1, SBIP, Hsin-Chu City 300
TEL:(03)567-0766 FAX:(03)578-7610
Title
DRAM Interface
Size
Document Number
MT5301C
Drawn
Frank Chi
Rev
Date: 11 14
Sheet of

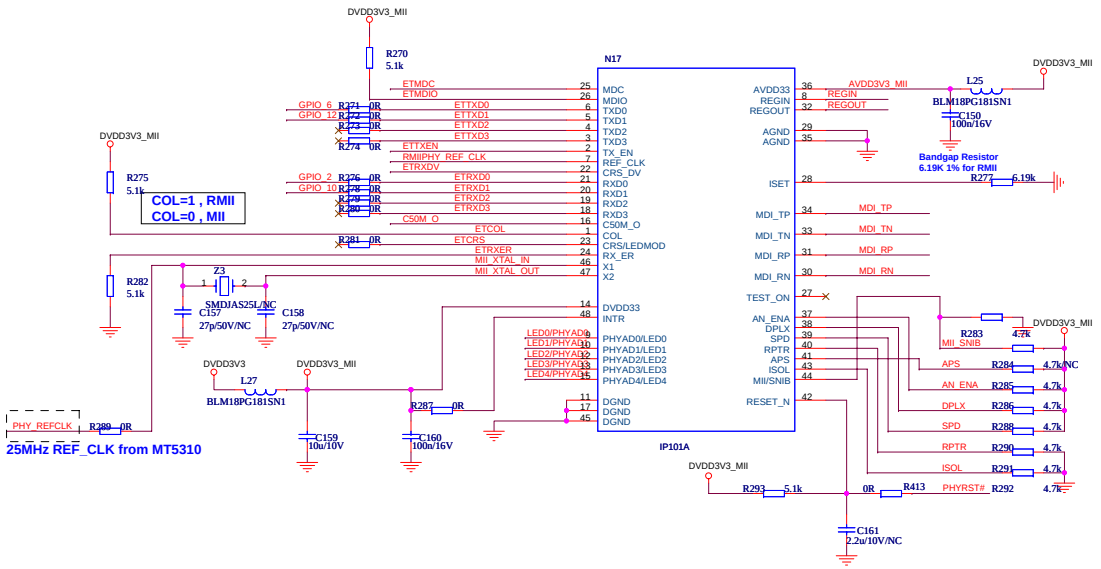

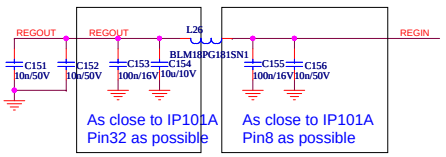

** Bead should be placed as close to IP101A as possible and in the same side as IP101A.

* : Optional ,but recommended

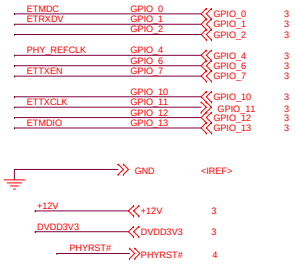

ETHERNET PHY
RMII Mode

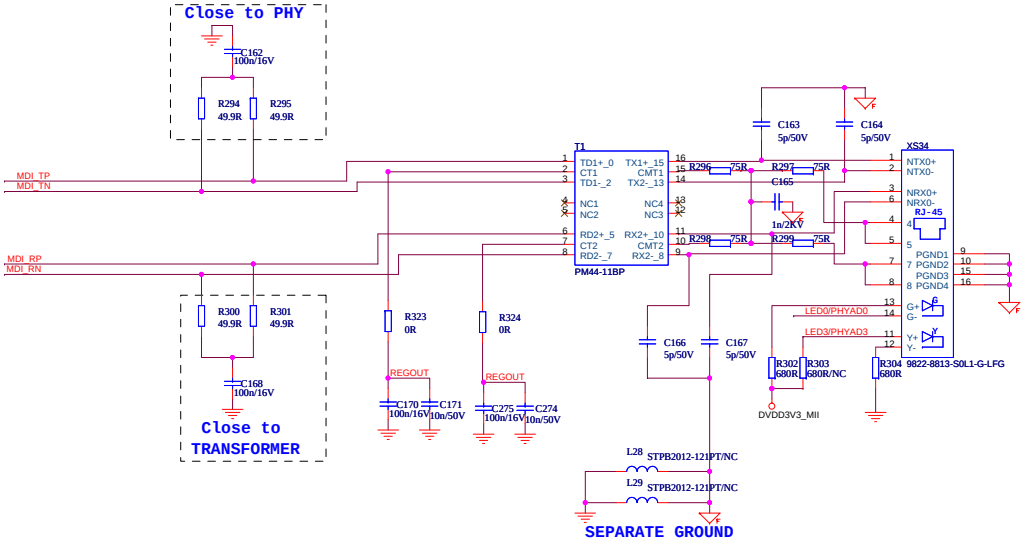

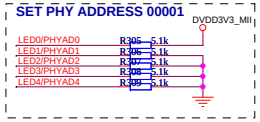

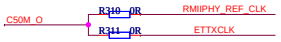

PAD_GPIO0	etmdc(O)
PAD_GPIO1	etrxdv(I)
PAD_GPIO2	etrxd[0](I)
PAD_GPIO3	etrxclk(I/O)
PAD_GPIO4	etphyclk(I/O)
PAD_GPIO6	ettxd[0](O)
PAD_GPIO7	ettxen (O)
PAD_GPIO8	etcol(I/O)
PAD_GPIO10	etrxd[1](I)
PAD_GPIO11	ettxclk(I/O)
PAD_GPIO12	ettxd[1](O)
PAD_GPIO13	etmdio(I/O)

MediaTek Inc No.1-2, Innovation Rd 1, SBIP, Hsin-Chu City 300 TEL:(03)567-0766 FAX:(03)578-7610

Title	RMII/GPIO		
Size	Document Number MT5301C	Drawn Frank Chi	Rev
Date: 12 14		Sheet of	

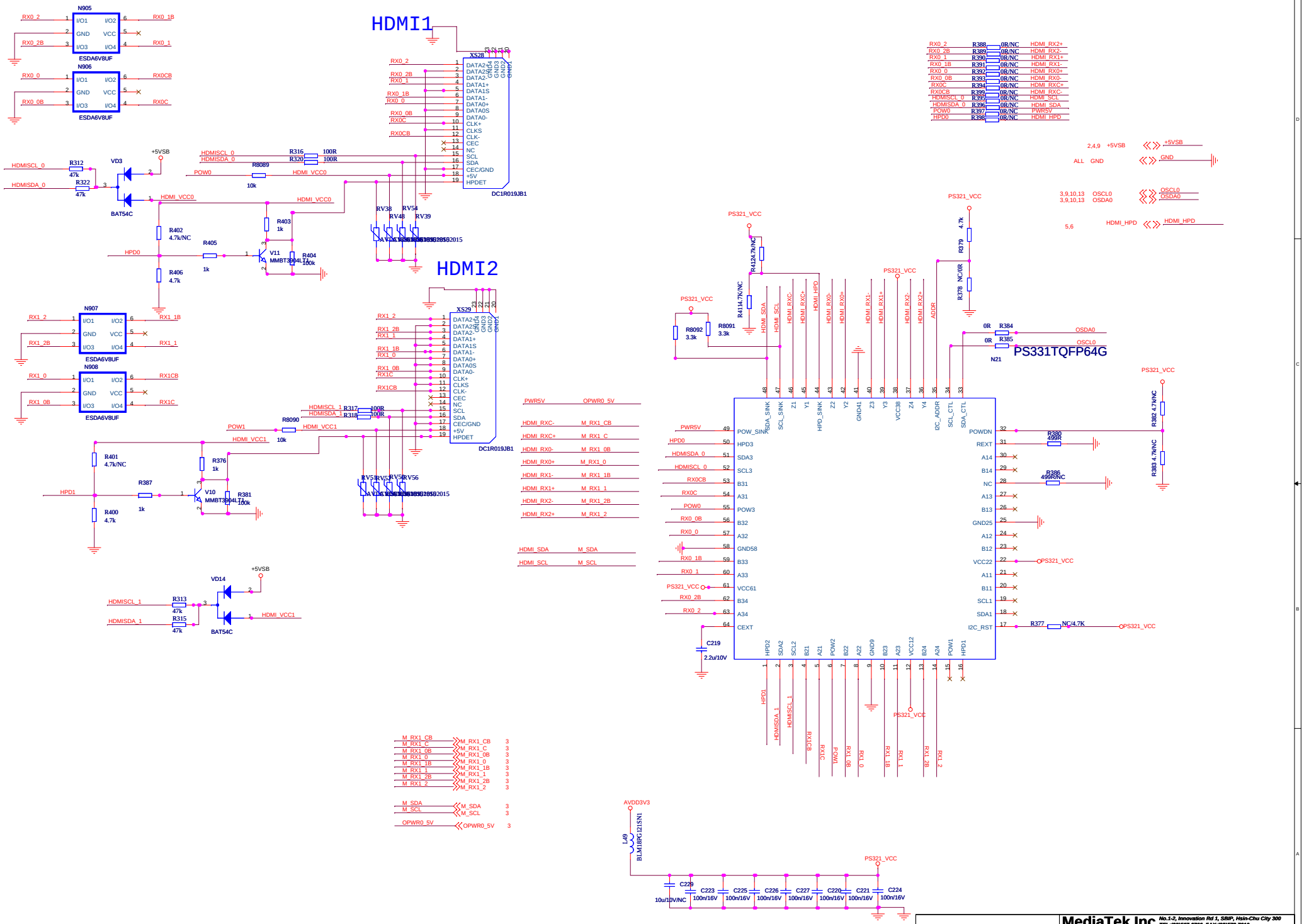
HDMI1
HDMI2
PS331TQFP64G
DC1R019JB1
ESDA6V8UF
BAT54C
N905
N906
N907
N908
XS28
XS29
N21
VD3
VD14
V11
V10
MMBT3904LT1
+5VSB
PS321_VCC
AVDD3V3
L49
BLM18PG121SN1
C229
10u/10V/NC
C223
C225
C226
C227
C220
C221
C224
100n/16V
C219
2.2u/10V
R312
R322
R316
R320
R8089
R402
R403
R404
R405
R406
R401
R376
R381
R387
R400
R313
R315
R317
R318
R8090
R4124.7k/NC
R4114.7k/NC
R8092
R8091
R379
R378
R384
R385
R380
R386
R382
R383
R377
RV38
RV48
RV54
RV39
RV51
RV57
RV50
RV56
HDMI_VCC0
HDMI_VCC1
HDMISCL_0
HDMISDA_0
HDMISCL_1
HDMISDA_1
POW0
POW1
HPD0
HPD1
OSDA0
OSCL0
M_SDA
M_SCL
OPWR0_5V
M_RX1_CB
M_RX1_C
M_RX1_0B
M_RX1_0
M_RX1_1B
M_RX1_1
M_RX1_2B
M_RX1_2
MediaTek Inc
No.1-2, Innovation Rd 1, SBIP, Hsin-Chu City 300
TEL:(03)567-0766 FAX:(03)578-7610
Title
Size
Document Number
MT5301C
Drawn
Rev
Date: 13
14
Sheet
of

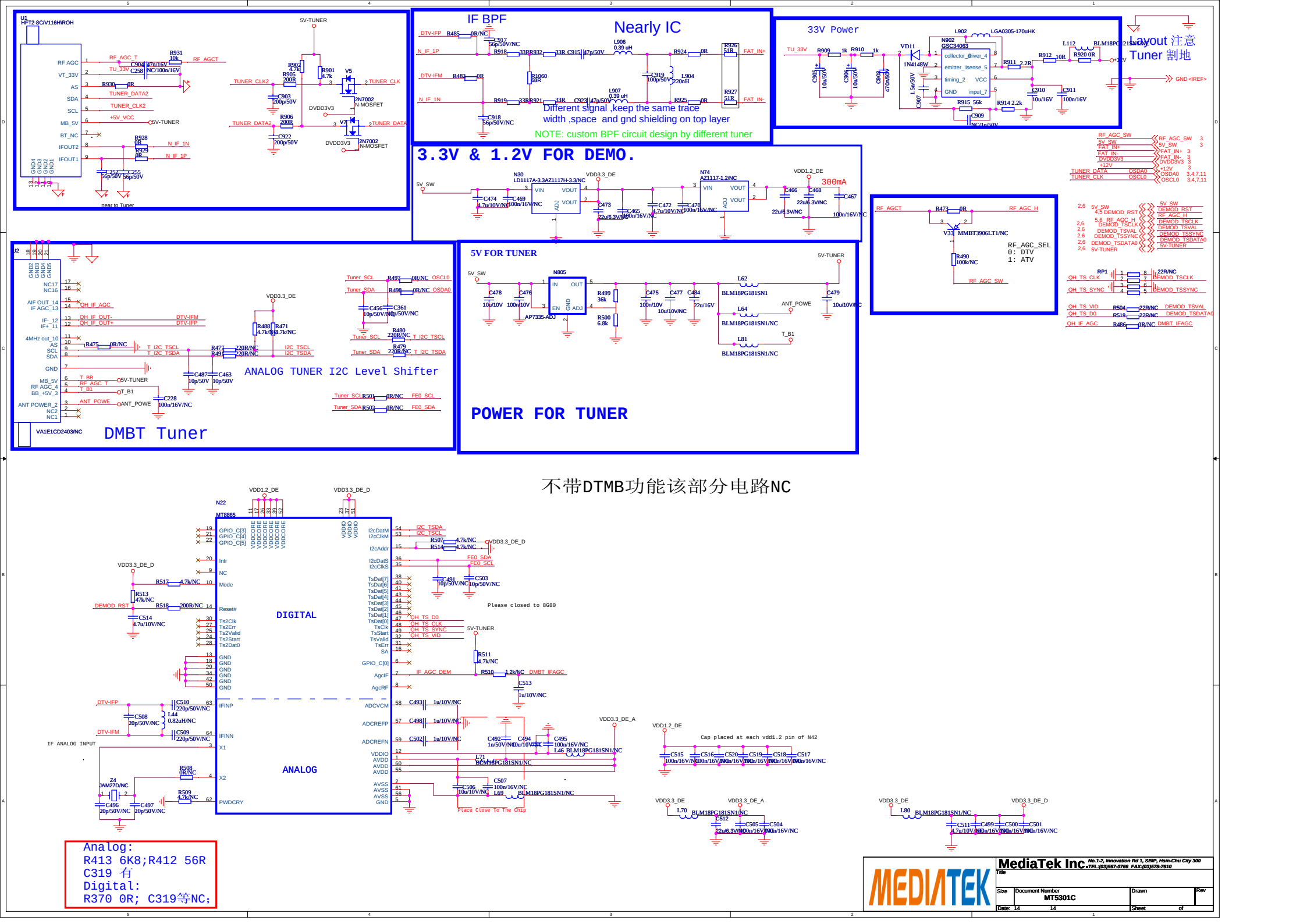
IF BPF
Nearly IC
Different signal ,keep the same trace width ,space and gnd shielding on top layer
NOTE: custom BPF circuit design by different tuner
33V Power
Layout 注意
Tuner 割地
3.3V & 1.2V FOR DEMO.
300mA
5V FOR TUNER
POWER FOR TUNER
ANALOG TUNER I2C Level Shifter
DMBT Tuner
RF_AGC_SEL
0: DTV
1: ATV
不带DTMB功能该部分电路NC
DIGITAL
ANALOG
Please closed to 8G80
Cap placed at each vdd1.2 pin of N42
Place close to the chip
Analog:
R413 6K8;R412 56R
C319 有
Digital:
R370 0R; C319等NC;
MediaTek Inc
MT5301C