SAMSUNG PROPRIETARY
THIS DOCUMENT CONTAINS CONFIDENTIAL
PROPRIETARY INFORMATION THAT IS
SAMSUNG ELECTRONIS CO'S PROPRIETARY.
DO NOT DISCLOSE TO OR DUPLICATE FOR OTHERS
EXCEPT AS AUTHORIZED BY SAMSUNG.
Comply with the threshold of substances
which are specified in 0QA-2049

BLOCK NAME: high_x12_union
BLK PAGE NO.: 1 OF 19

X12 UNION
BOARD SCHEMATIC

SCHEMATICS INDEX

01_COVER SHEET
02_STANDBY / MAIN POWER
03_SOUND AMP / SCART AMP / HEADPHONE, MONITOR OUT
SPIDF / POP NOISE SOLUTION / DVI SOUND
04_SCART / COMPONENT / VIDEO
05_X12 HDMI / HDMI INPUT(HDMI 1 / 2)
06_HDMI INPUT(HDMI 3 / 4)
07_TUNER
08_X12 CVBS / X12 TUNER / X12 TS / JTAG
09_X12 GPIO / MODE SELECT / MAIN EEPROM / DEBUG
10_X12 POWER / GND
11_X12 DDR / DDR3 MEMORY
12_SUB MICOM / FUNCTION / DEBUG PORT
13_X12 CI / NAND / SPI FLASH
14_X12 LVDS / AUDIO / LAN
15_X12 USB / USB(1 / 2 / 3) / WIFI
16_PCMCIA
17_IR BLASTER
18_CPLD / SENSOR

<LOCATION SUFFIX>

_FHD : FHD
_HD : HD

_3D : 3D OPTION

_HN : HALF NIM TUNER
_FN : FULL NIM TUNER
_DS : SATELLITE TUNER
_TCS2 : TCS

_120HZ : 120HZ_FRC_TCON
_SHARP : SHARP PANEL

_JEIDA : LVDS FORMAT JEIDA
_VESA : LVDS FORMAT VESA

_U1 / U2 / U3 / U23 : USB 1 / 2 / 3 /23_COMMON
_H1 / H2 / H3 / H4 : HDMI 1 / 2 / 3 / 4

_SPI : SPI
_BOOT : BOOT STRAP

_IRB : IR BLASTER
_ORST : OLD RESET IC

_LCD : LCD
_PDP : PDP

_1V8 : TUNER 1.8V OPTION
_3V3 : TUNER 3.3V OPTION

_LAN : ETHERNET
_SC : SCART OPTION
_CI : CI OPTION
_WIFI : WIFI OPTION

_MO : MONITOR LR OUT
_HP : HEADPHONE OUT
_HM : HP & MONI_LR OUT

_RS : RS232 (US/KR)

_CP : CPLD
_UART : UART / USB USE OPTION
_EW : EARLY WARNING
_LB : LOOP BACK
_ZERO : ZERO MODEL
_NZERO : NORMAL MODEL

Z : DELETE OPTION
_DB : DEBUG

SCHEMATICS INDEX

LAYER 1 ----- TOP (SIGNAL1)
LAYER 2 ----- INNER 1 (GND)
LAYER 3 ----- INNER 2 (POWER)
LAYER 4 ----- BOTTOM (SIGNAL2)

PROJECT NAME: high_x12_union		A2	DRAWN BY: Unknown
			CHECKED BY: Unknown
SAMSUNG	DEV.STEP: Unknown	REV.: 1.0	APPROVED BY: Unknown
LAST EDITED TIME: Wed Dec 05 08:38:46 2012			TOTAL PAGE NO.: 1 OF 18

SAMSUNG PROPRIETARY
THIS DOCUMENT CONTAINS CONFIDENTIAL PROPRIETARY INFORMATION THAT IS SAMSUNG ELECTRONIS CO'S PROPRIETARY. DO NOT DISCLOSE TO OR DUPLICATE FOR OTHERS EXCEPT AS AUTHORIZED BY SAMSUNG.
Comply with the threshold of substances which are specified in 0QA-2049

BLOCK NAME: high_x12_union
BLK PAGE NO.: 2 OF 19

02_STANDBY / MAIN POWER

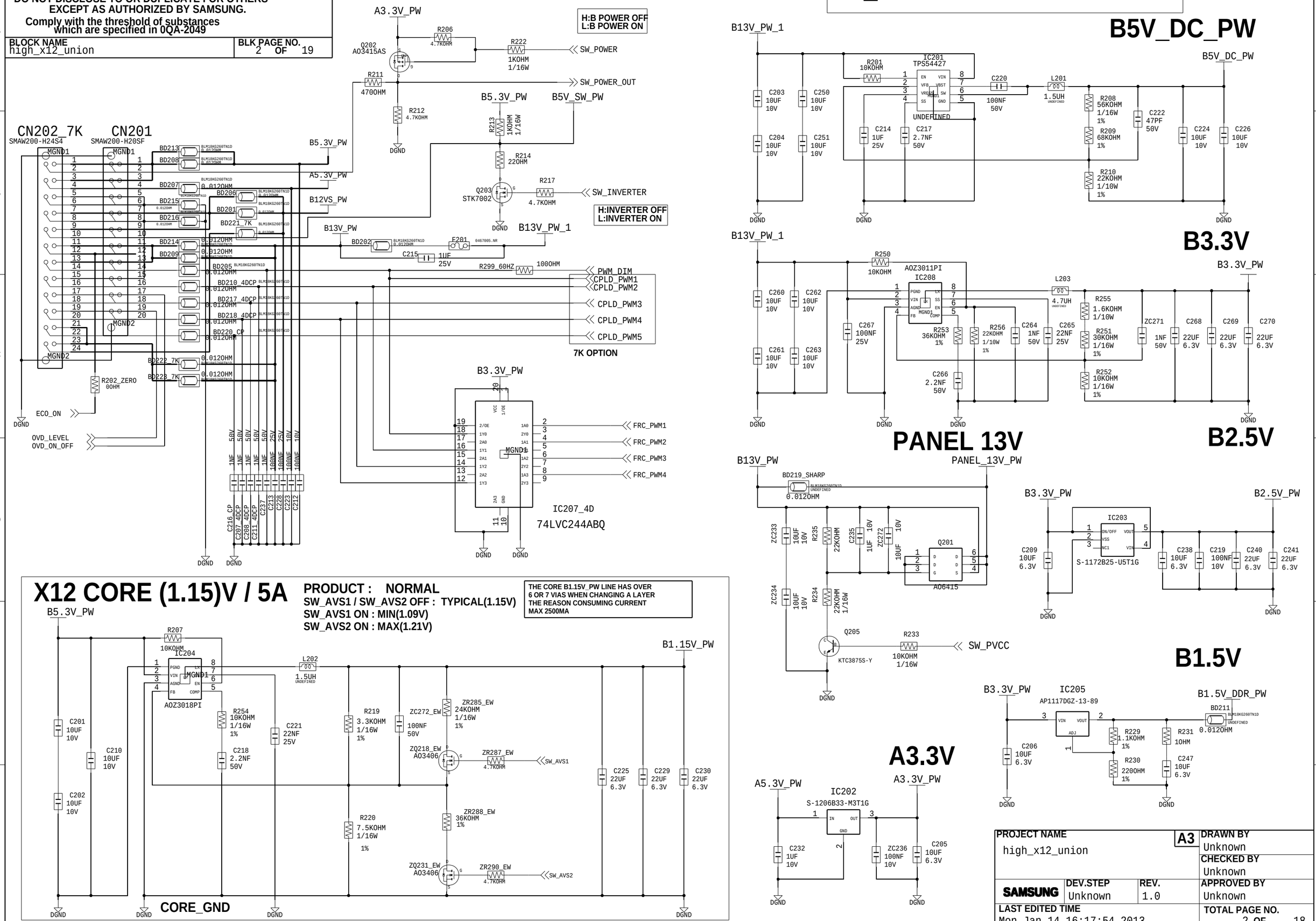

PROJECT NAME		DRAWN BY
high_x12_union	A3	Unknown
		CHECKED BY: Unknown
SAMSUNG — DEV.STEP: Unknown	REV.: 1.0	APPROVED BY: Unknown
LAST EDITED TIME: Mon Jan 14 16:17:54 2013		TOTAL PAGE NO.: 2 OF 18

SAMSUNG PROPRIETARY
THIS DOCUMENT CONTAINS CONFIDENTIAL PROPRIETARY INFORMATION THAT IS SAMSUNG ELECTRONIS CO'S PROPRIETARY. DO NOT DISCLOSE TO OR DUPLICATE FOR OTHERS EXCEPT AS AUTHORIZED BY SAMSUNG.
Comply with the threshold of substances which are specified in 0QA-2049

BLOCK NAME: high_x12_union
BLK PAGE NO.: 3 OF 19

03_SOUND AMP / SCART AMP / HEADPHONE, MONITOR OUT SPIDF / POP NOISE SOLUTION / DVI SOUND

POP NOISE SOLUTION

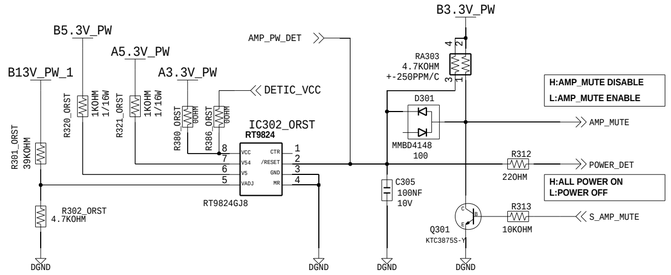

SPDIF OUT

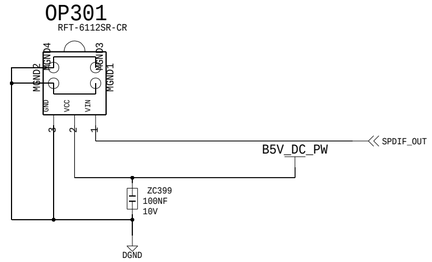

SCART SOUND OUT(ONLY USE EU)

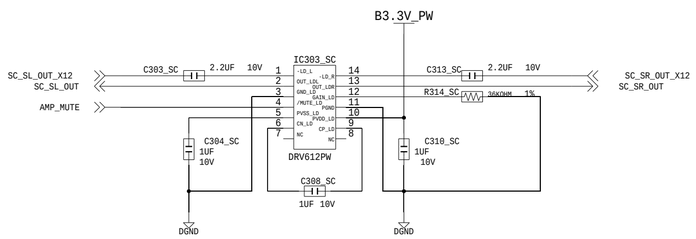

SOUND AMP

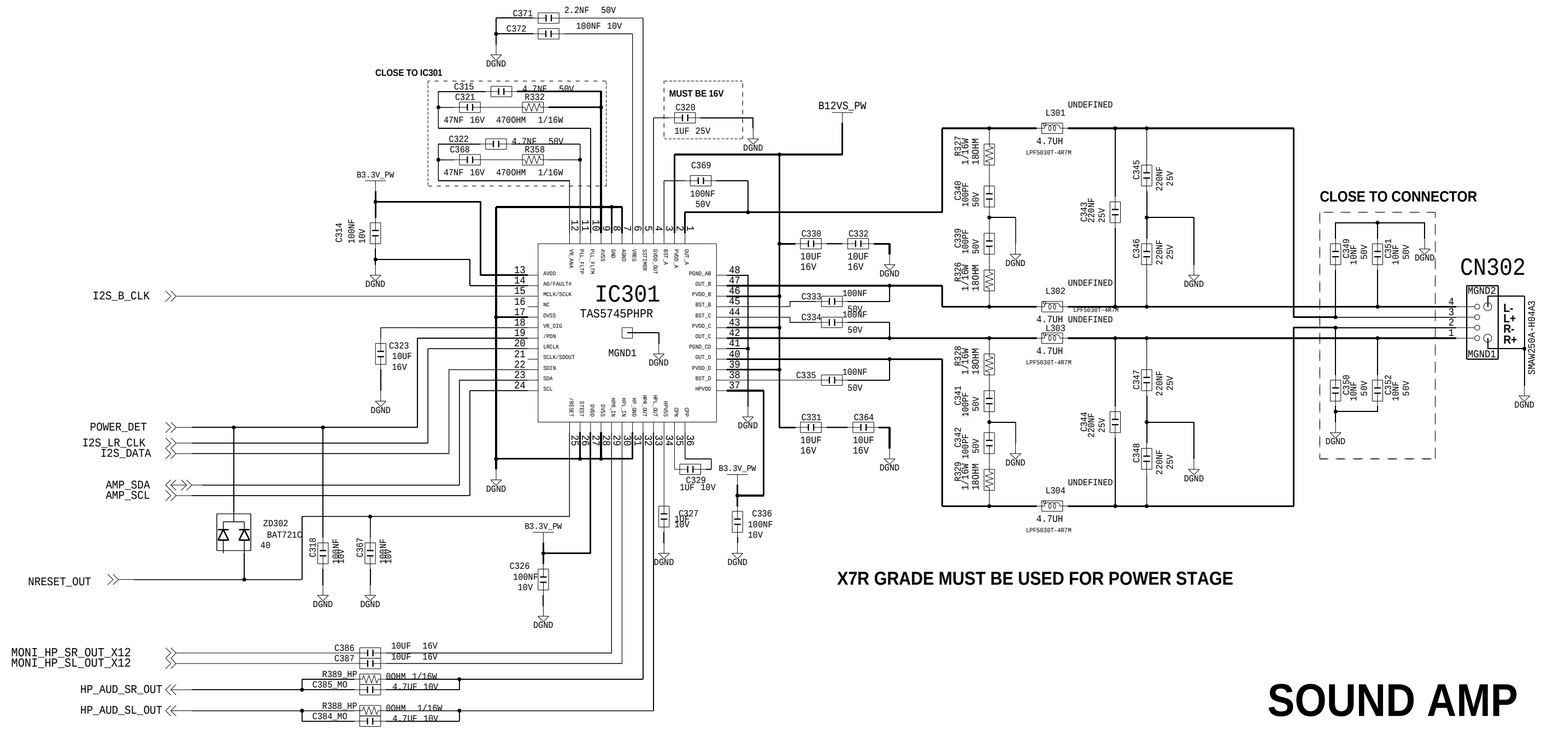

IR BLAST

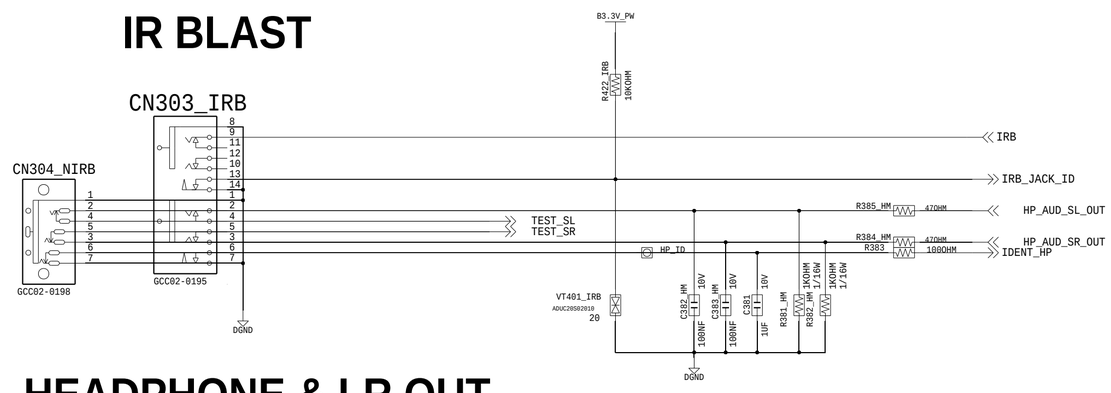

HEADPHONE & LR OUT

LOCATION	HEADPHONE		MONITOR LR OUT	
C382_HM	2203-006048	(100NF)	2203-000714	(3.3NF)
C383_HM	2203-006048	(100NF)	2203-000714	(3.3NF)
R381_HM	2007-000140	(1KOHM)	2007-000157	(47KOHM)
R382_HM	2007-000140	(1KOHM)	2007-000157	(47KOHM)
R384_HM	2007-000174	(47OHM)	2007-000932	(470OHM)
R385_HM	2007-000174	(47OHM)	2007-000932	(470OHM)

PROJECT NAME: high_x12_union	A2	DRAWN BY: Unknown	
		CHECKED BY: Unknown	
SAMSUNG	DEV.STEP: Unknown	REV.: 1.0	APPROVED BY: Unknown
LAST EDITED TIME: Mon Jan 14 16:17:56 2013			TOTAL PAGE NO.: 3 OF 18

SAMSUNG PROPRIETARY
THIS DOCUMENT CONTAINS CONFIDENTIAL PROPRIETARY INFORMATION THAT IS SAMSUNG ELECTRONIS CO'S PROPRIETARY. DO NOT DISCLOSE TO OR DUPLICATE FOR OTHERS EXCEPT AS AUTHORIZED BY SAMSUNG.
Comply with the threshold of substances which are specified in 0QA-2049

BLOCK NAME	BLK PAGE NO.
high_x12_union	4 OF 19

04_SCART / COMPONENT / VIDEO

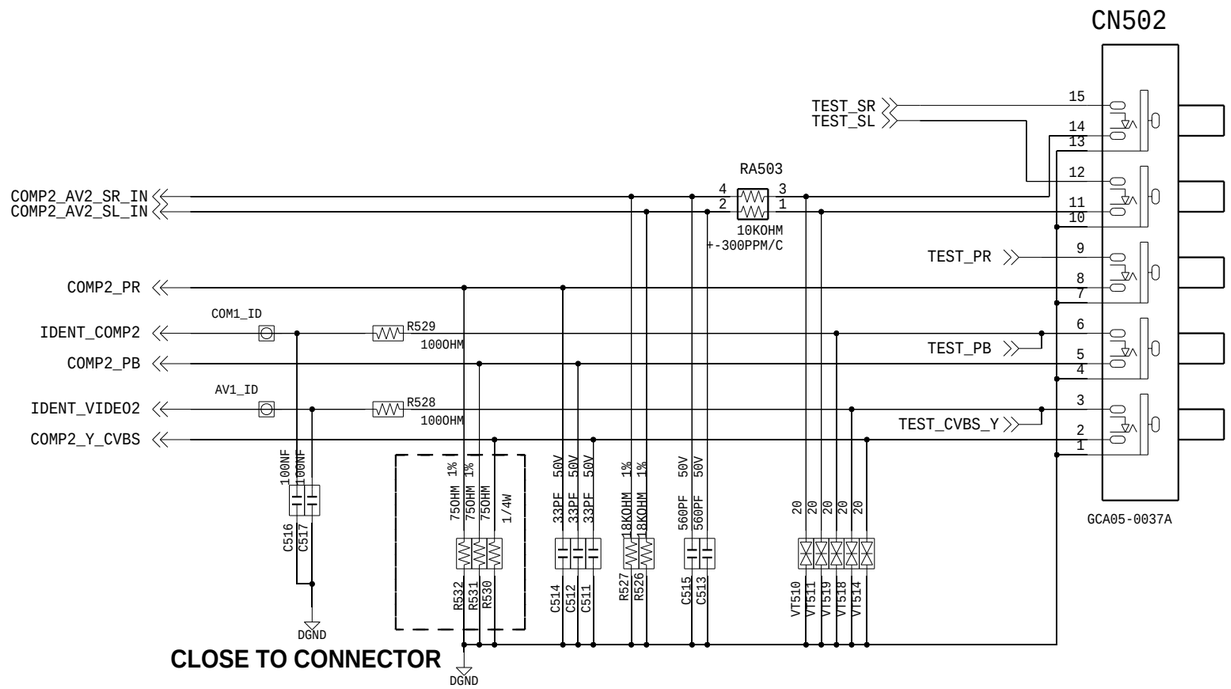

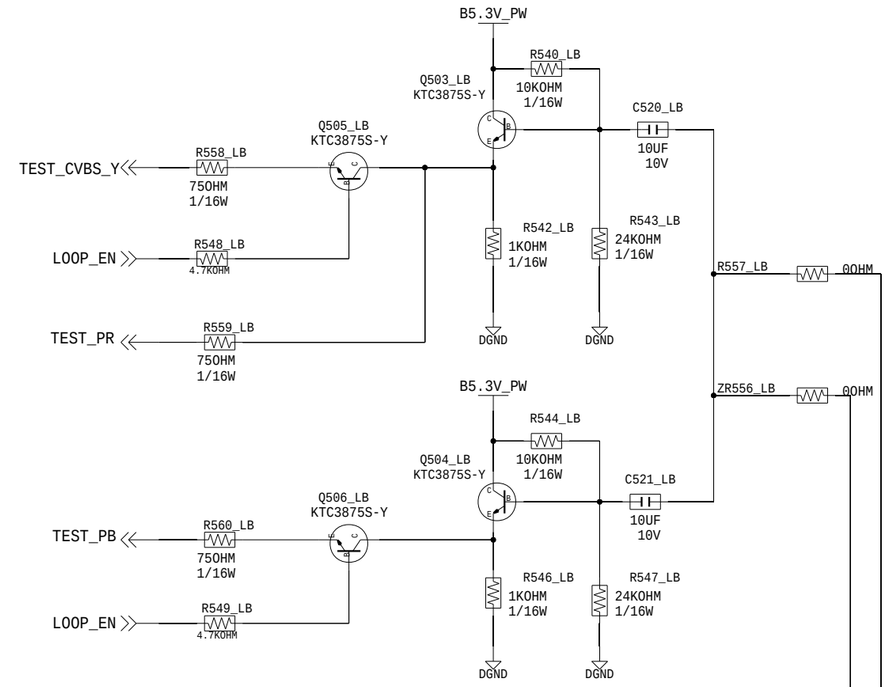

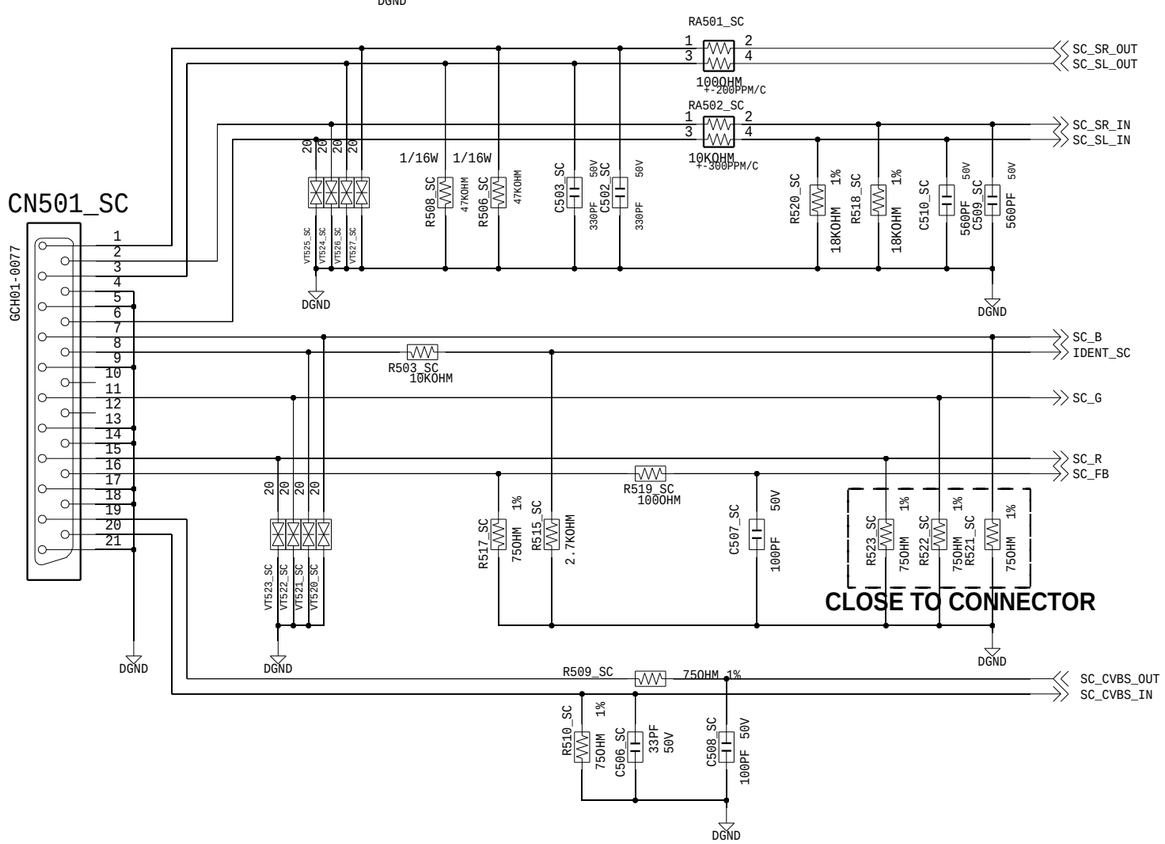

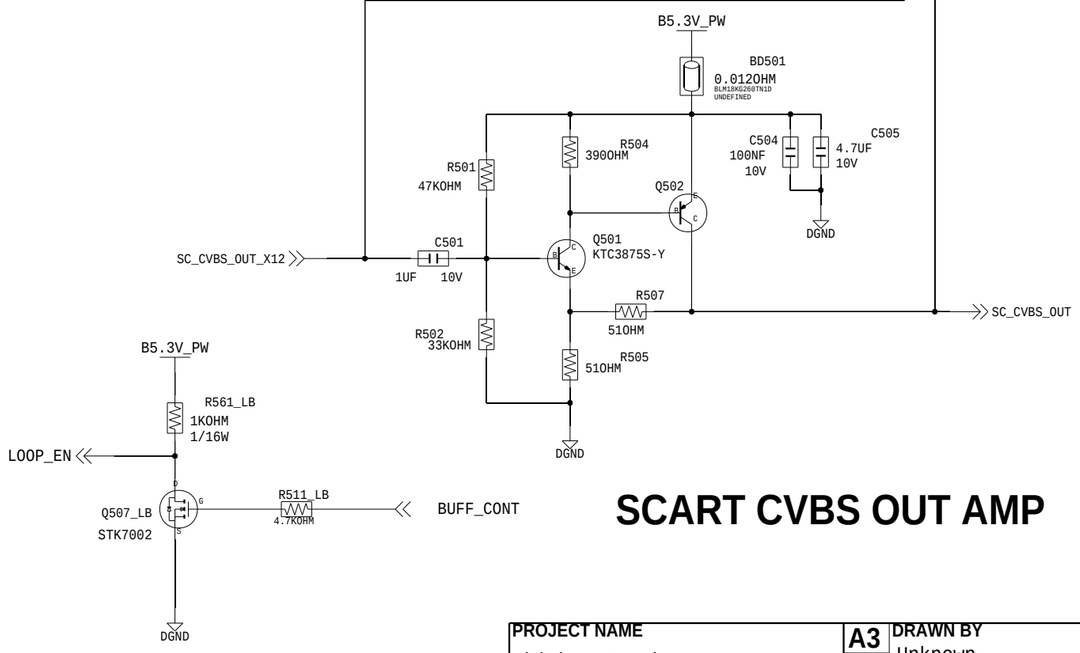

SCART CVBS OUT AMP

PROJECT NAME			A3	DRAWN BY
high_x12_union				Unknown
				CHECKED BY Unknown
SAMSUNG	DEV.STEP Unknown	REV. 1.0		APPROVED BY Unknown
LAST EDITED TIME Mon Jan 14 16:17:50 2013				TOTAL PAGE NO. 4 OF 18

SAMSUNG PROPRIETARY
THIS DOCUMENT CONTAINS CONFIDENTIAL PROPRIETARY INFORMATION THAT IS SAMSUNG ELECTRONIS CO'S PROPRIETARY. DO NOT DISCLOSE TO OR DUPLICATE FOR OTHERS EXCEPT AS AUTHORIZED BY SAMSUNG.
Comply with the threshold of substances which are specified in 0QA-2049

BLOCK NAME: high_x12_union
BLK PAGE NO.: 6 OF 19

5. HDMI

HDMI

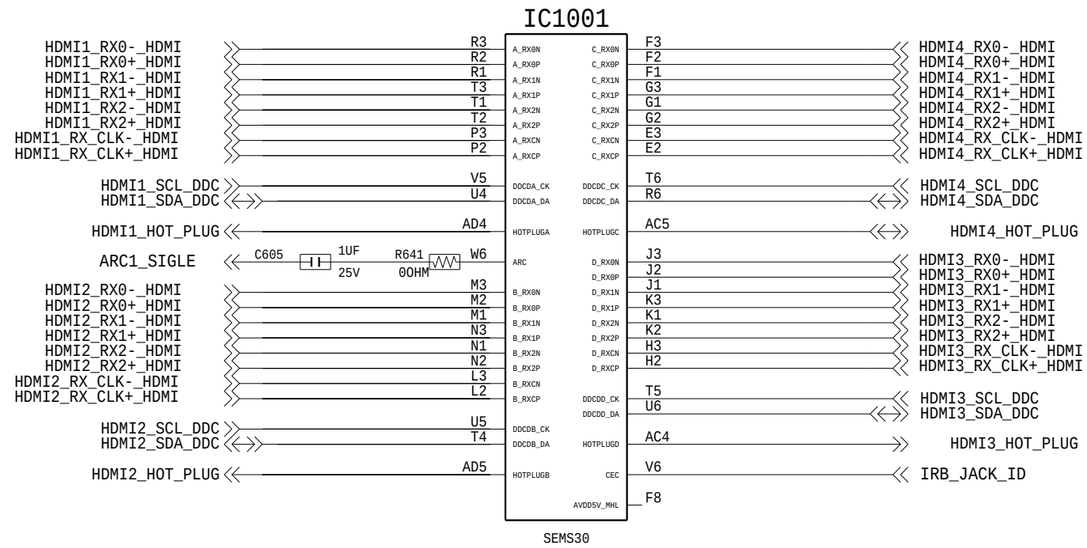

HDMI INPUT4 (DVI)

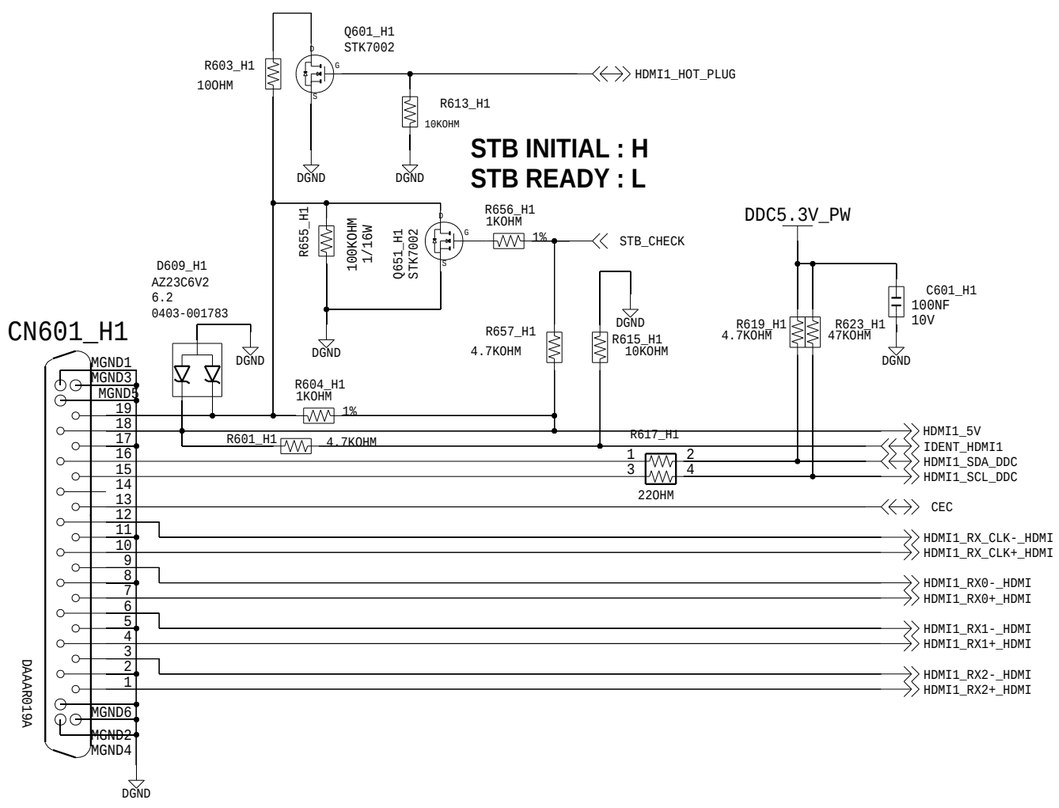

HDMI INPUT1 (STB)

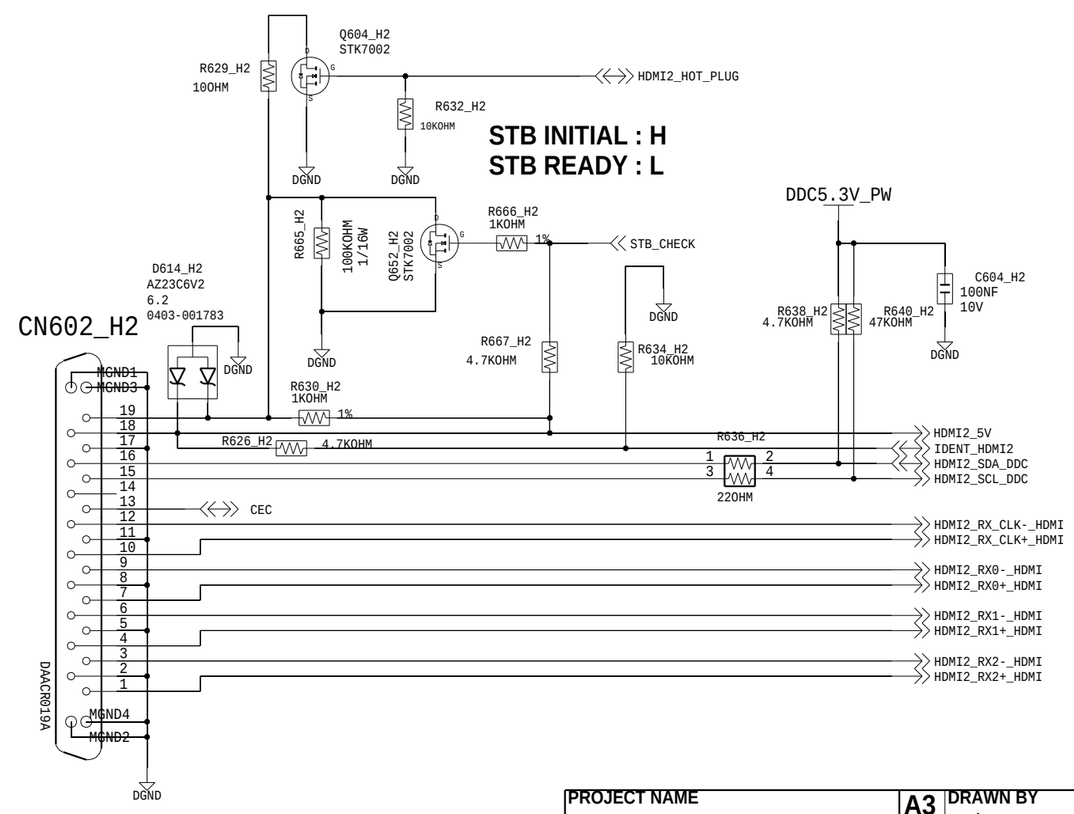

PROJECT NAME: high_x12_union		A3	DRAWN BY: Unknown
			CHECKED BY: Unknown
SAMSUNG	DEV.STEP: Unknown	REV.: 1.0	APPROVED BY: Unknown
LAST EDITED TIME: Mon Jan 14 23:36:54 2013			TOTAL PAGE NO.: 5 OF 18

SAMSUNG PROPRIETARY
THIS DOCUMENT CONTAINS CONFIDENTIAL PROPRIETARY INFORMATION THAT IS SAMSUNG ELECTRONIS CO'S PROPRIETARY. DO NOT DISCLOSE TO OR DUPLICATE FOR OTHERS EXCEPT AS AUTHORIZED BY SAMSUNG.
Comply with the threshold of substances which are specified in 0QA-2049

BLOCK NAME: high_x12_union
BLK PAGE NO.: 7 OF 19

6. HDMI

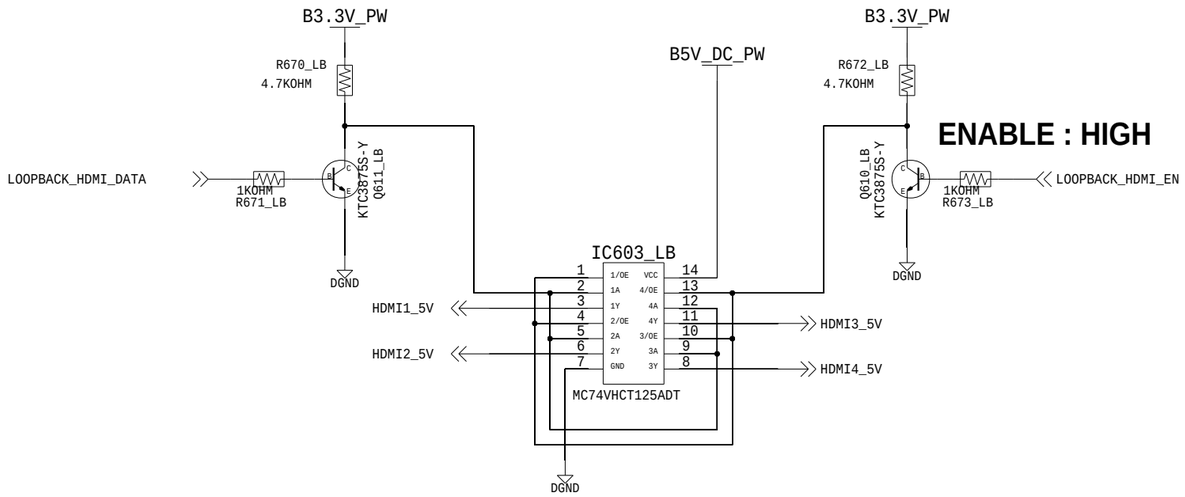

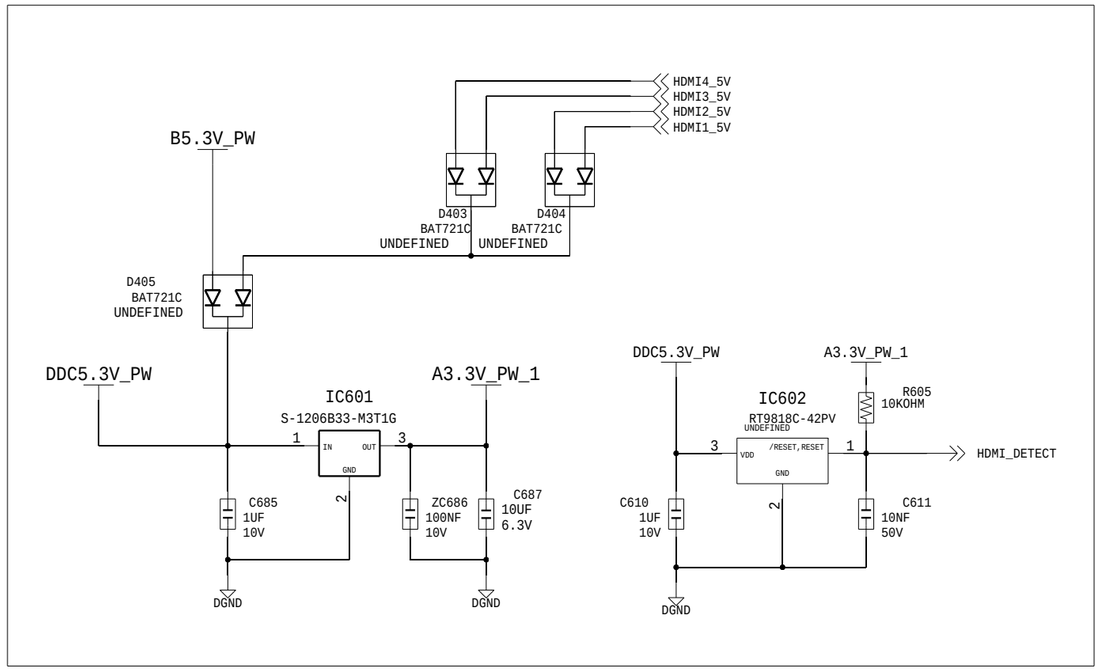

HDMI INPUT2 (ARC)

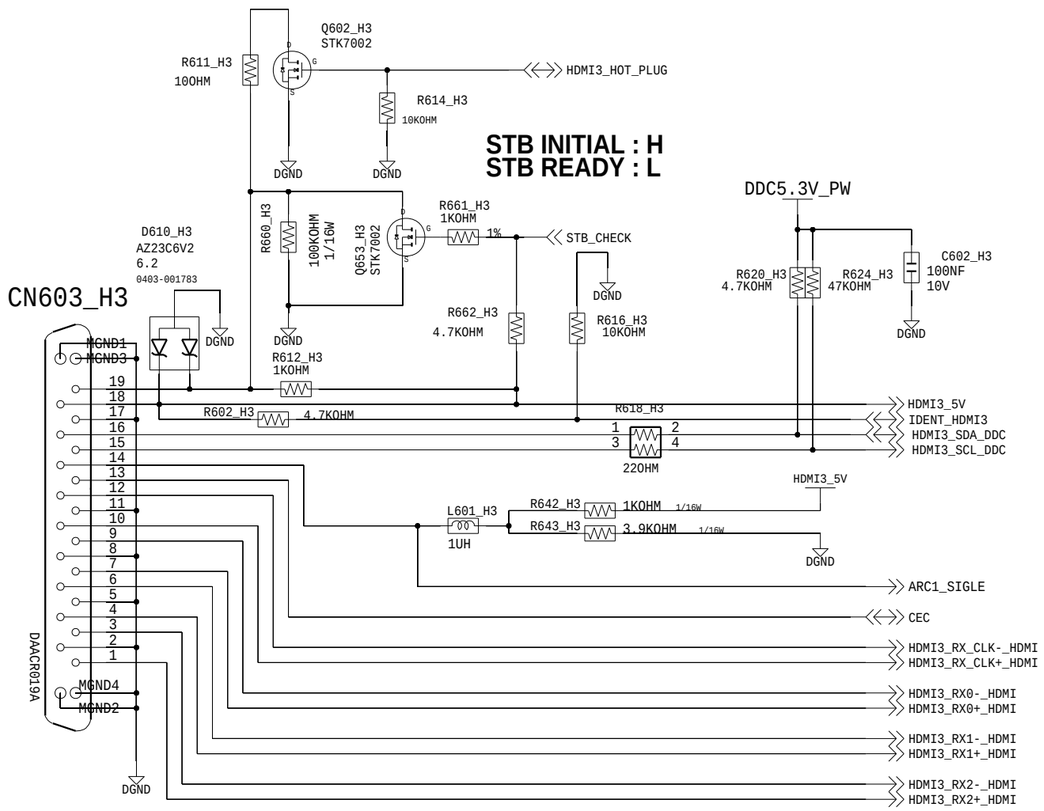

HDMI INPUT3

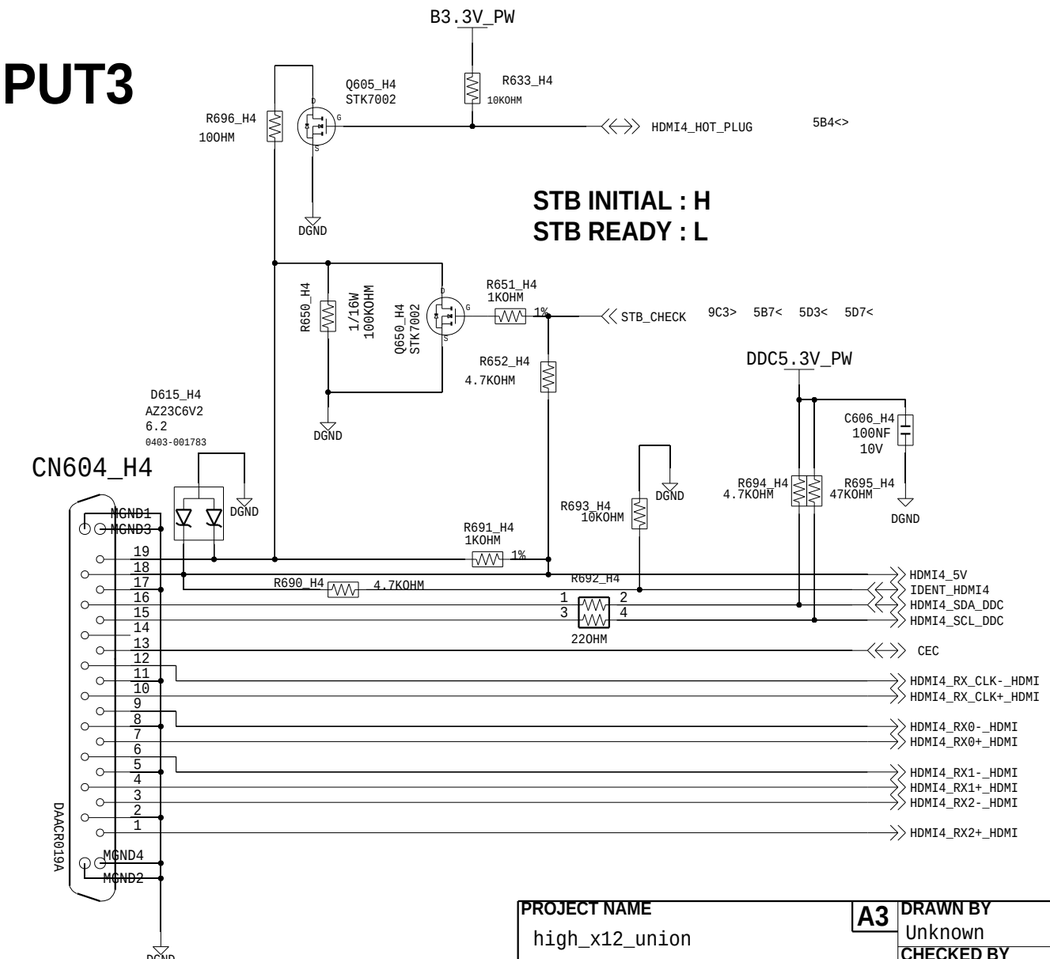

PROJECT NAME			A3	DRAWN BY
high_x12_union				Unknown
				CHECKED BY Unknown
SAMSUNG	DEV.STEP Unknown	REV. 1.0		APPROVED BY Unknown
LAST EDITED TIME Mon Jan 14 23:37:05 2013				TOTAL PAGE NO. 6 OF 18

SAMSUNG PROPRIETARY
THIS DOCUMENT CONTAINS CONFIDENTIAL PROPRIETARY INFORMATION THAT IS SAMSUNG ELECTRONIS CO'S PROPRIETARY. DO NOT DISCLOSE TO OR DUPLICATE FOR OTHERS EXCEPT AS AUTHORIZED BY SAMSUNG.
Comply with the threshold of substances which are specified in 0QA-2049

BLOCK NAME: high_x12_union
BLK PAGE NO.: 8 OF 19

07_TUNER

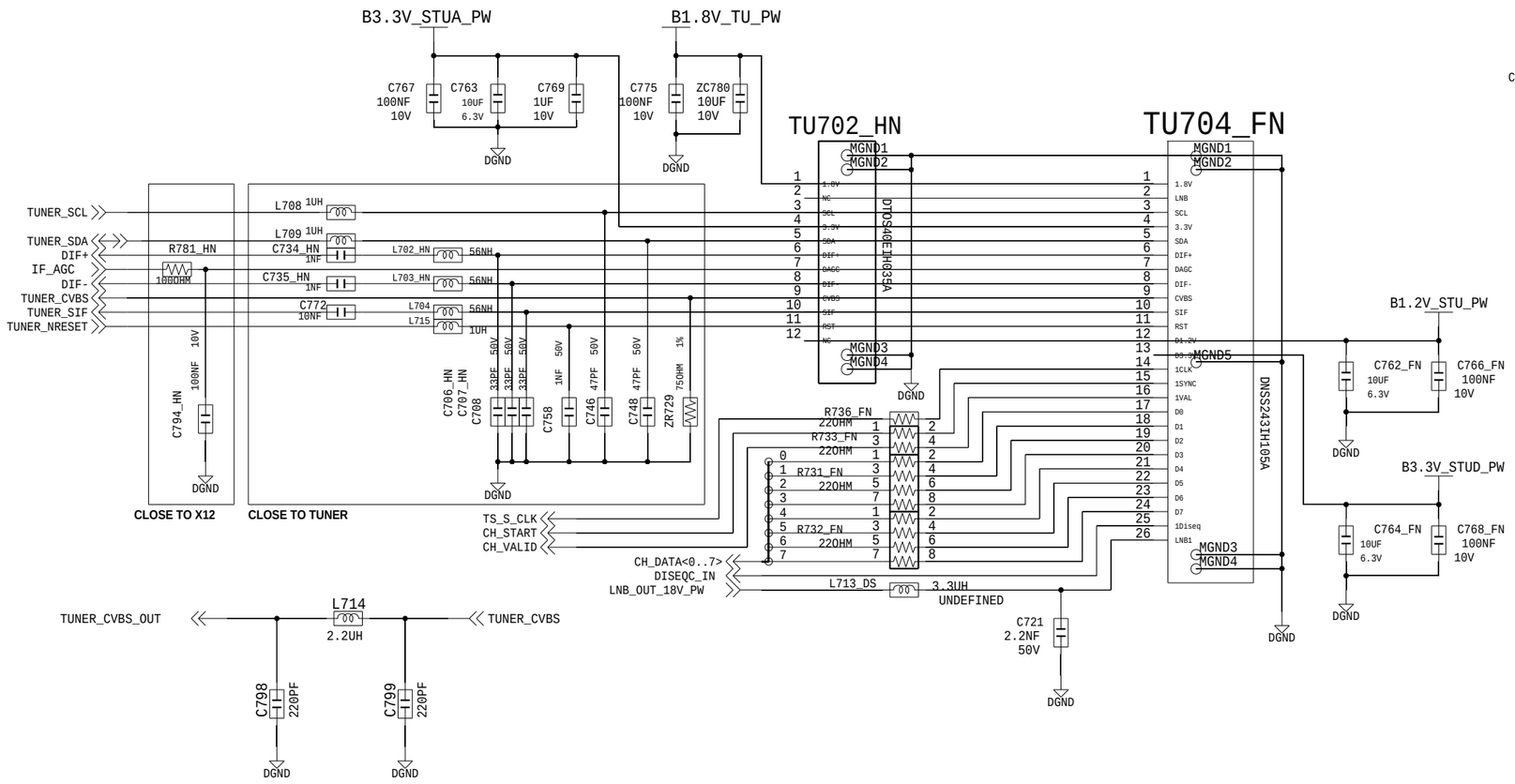

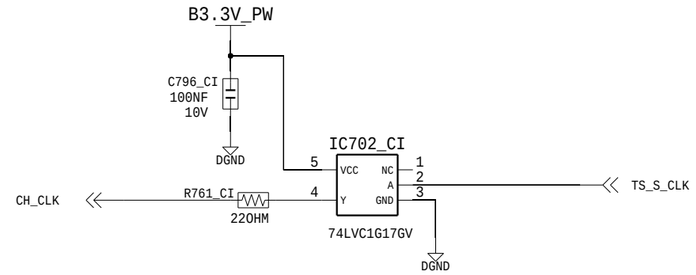

CLOSE TO TUNER

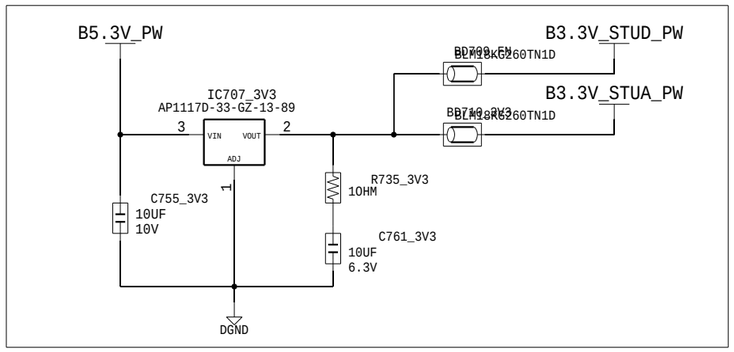

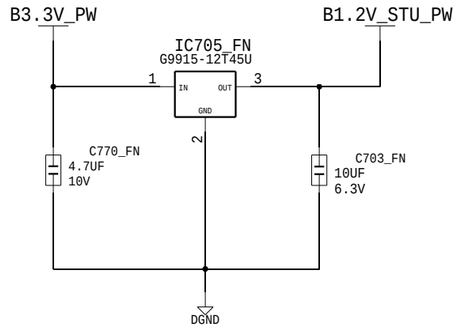

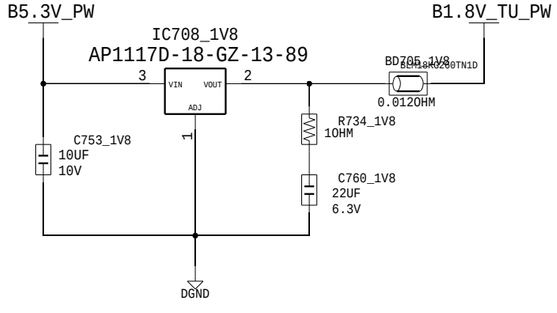

LNB CONTROL PART(DVB-S OPTION)

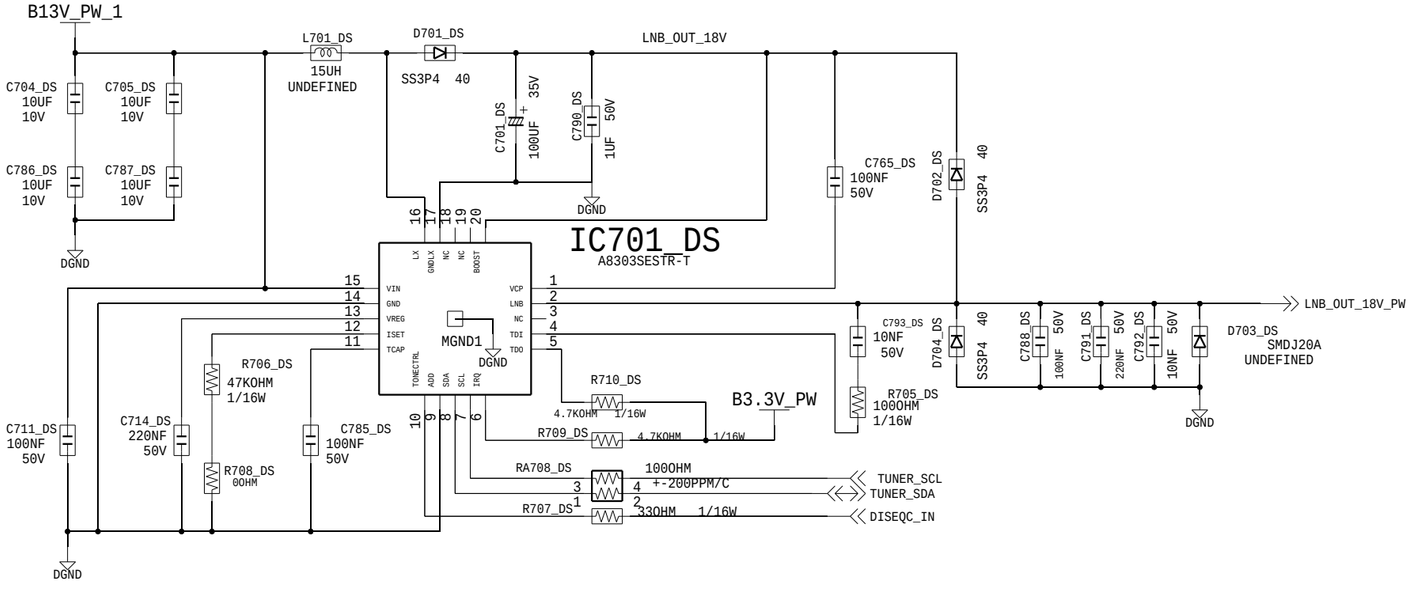

PROJECT NAME			A3	DRAWN BY
high_x12_union				Unknown
				CHECKED BY Unknown
SAMSUNG	DEV.STEP Unknown	REV. 1.0		APPROVED BY Unknown
LAST EDITED TIME Mon Jan 14 16:17:40 2013				TOTAL PAGE NO. 7 OF 18

SAMSUNG PROPRIETARY
THIS DOCUMENT CONTAINS CONFIDENTIAL PROPRIETARY INFORMATION THAT IS SAMSUNG ELECTRONIS CO'S PROPRIETARY. DO NOT DISCLOSE TO OR DUPLICATE FOR OTHERS EXCEPT AS AUTHORIZED BY SAMSUNG.
Comply with the threshold of substances which are specified in 0QA-2049

BLOCK NAME: high_x12_union
BLK PAGE NO.: 9 OF 19

08_ X12 CVBS / X12 TUNER / X12 TS / JTAG

CVBS

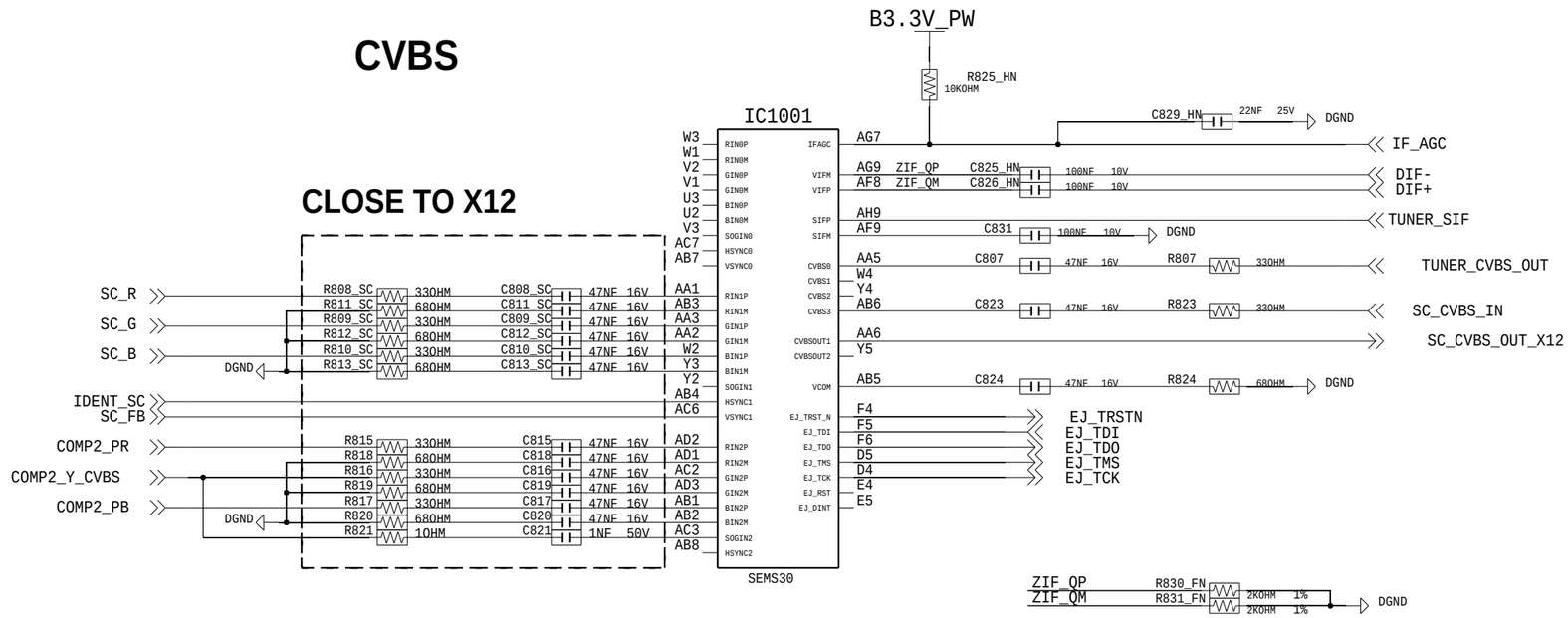

ARM_JTAG

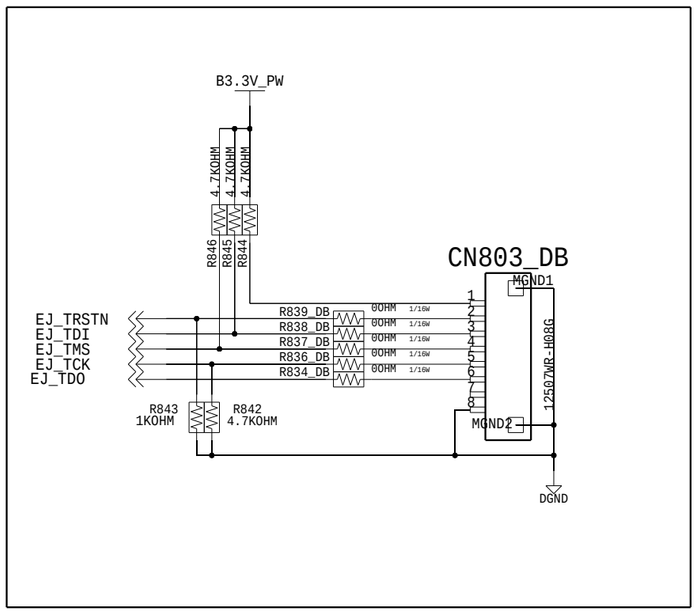

TS

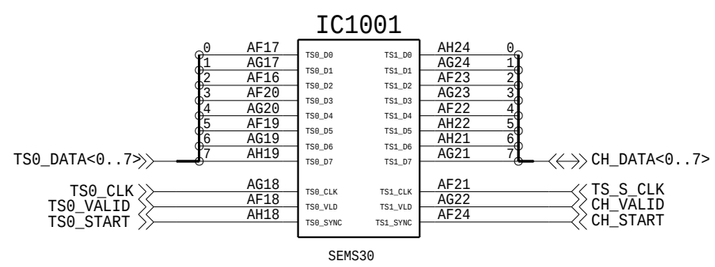

PROJECT NAME: high_x12_union	A3	DRAWN BY: Unknown	
		CHECKED BY: Unknown	
SAMSUNG	DEV.STEP: Unknown	REV.: 1.0	APPROVED BY: Unknown
LAST EDITED TIME: Mon Jan 14 16:17:42 2013			TOTAL PAGE NO.: 8 OF 18

SAMSUNG PROPRIETARY
THIS DOCUMENT CONTAINS CONFIDENTIAL PROPRIETARY INFORMATION THAT IS SAMSUNG ELECTRONIS CO'S PROPRIETARY. DO NOT DISCLOSE TO OR DUPLICATE FOR OTHERS EXCEPT AS AUTHORIZED BY SAMSUNG.
Comply with the threshold of substances which are specified in 0QA-2049

BLOCK NAME: high_x12_union
BLK PAGE NO.: 10 OF 19

09_X12 GPIO / MODE SELECT MAIN EEPROM / DEBUG

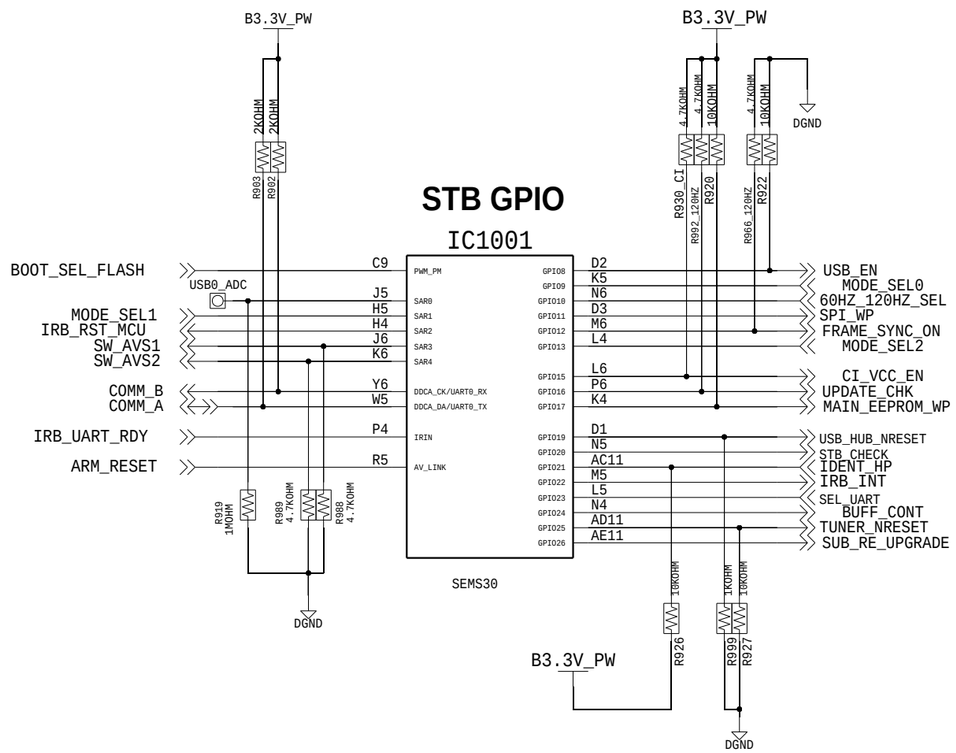

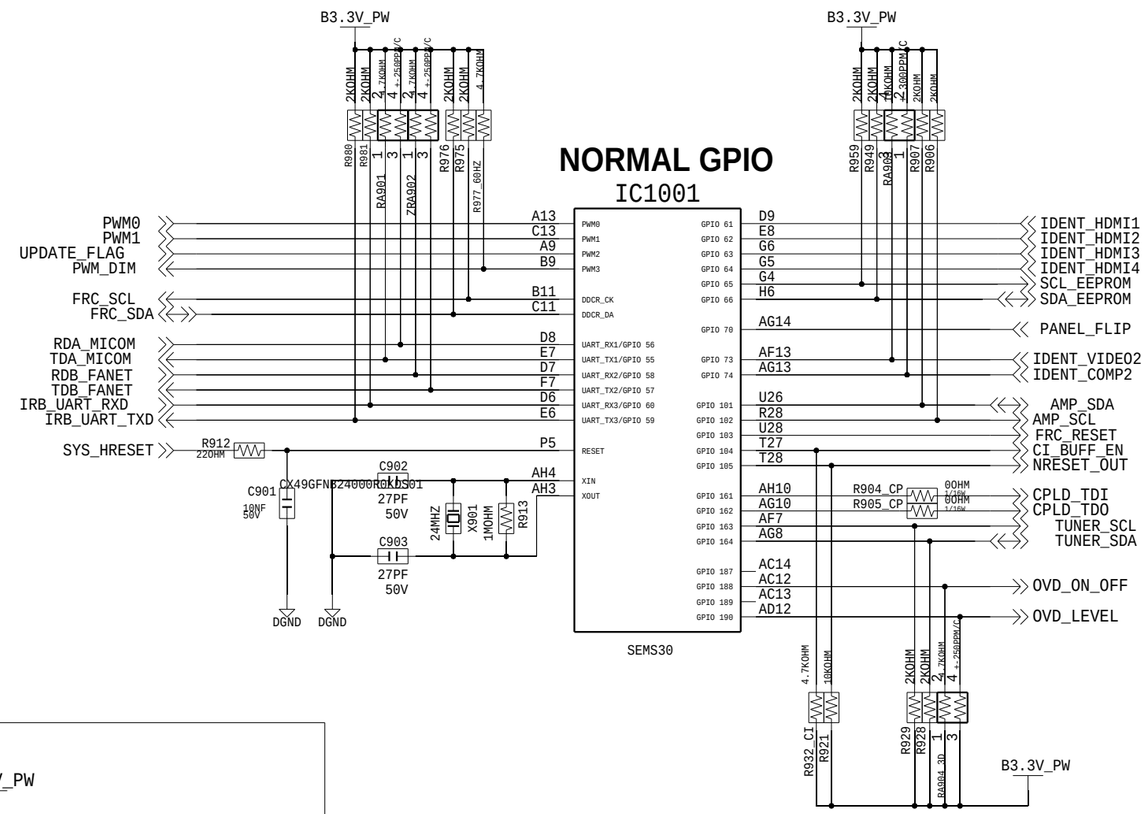

SELECT 60HZ/120HZ

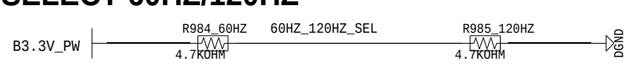

PULL UP : 60HZ
PULL DOWN : 120HZ

EEPROM

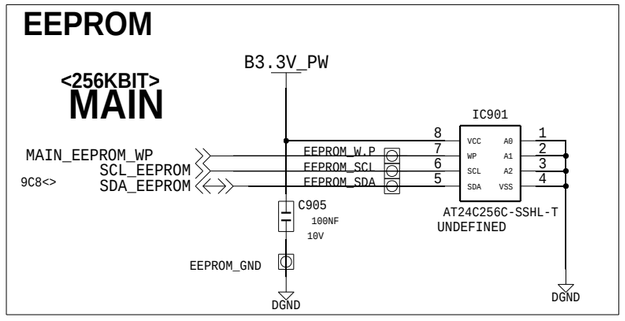

MSTAR CHIP DEBUG

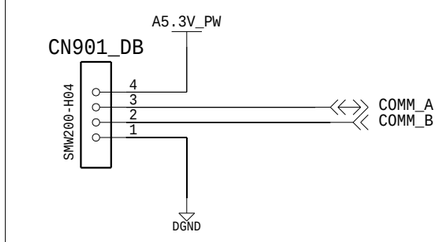

MODE_SEL

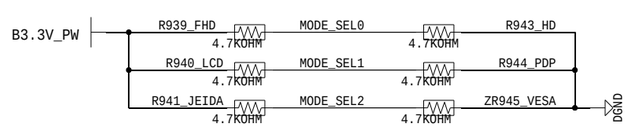

FAST LOGO

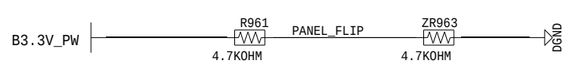

PANEL FLIP - HIGH : ON / LOW : OFF

BOOTSTRAP

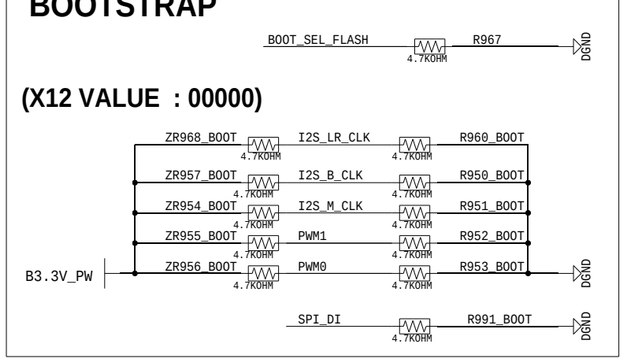

BOOT_SET_FLASH
0 BOOT FROM EXT_FLASH(CS1)
1 BOOT FROM INT_FLASH(CS0)

CHIP_CONFIG
00000 SB51_EXTSPI
00100 ARM_EXTSPI_NO_EJ
00101 ARM_EXTSPI_EJ1
01100 ARM_EMMC_M2_NO_EJ
01101 ARM_EMMC_M2_EJ1
10010 ARM_ROM_EMMC_M2_NO_EJ
10011 ARM_ROM_EMMC_M2_EJ1
11000 ARM_ROM_NAND_M3_NO_EJ
11001 ARM_ROM_NAND_M3_EJ1

SPI_DI
0 NODIE_STABLE (STAND BY VCC <-> SPI)

PROJECT NAME: high_x12_union	A3		DRAWN BY: Unknown
			CHECKED BY: Unknown
SAMSUNG	DEV.STEP: Unknown	REV.: 1.0	APPROVED BY: Unknown
LAST EDITED TIME: Mon Jan 14 16:17:53 2013			TOTAL PAGE NO.: 9 OF 18

SAMSUNG PROPRIETARY
THIS DOCUMENT CONTAINS CONFIDENTIAL PROPRIETARY INFORMATION THAT IS SAMSUNG ELECTRONIS CO'S PROPRIETARY. DO NOT DISCLOSE TO OR DUPLICATE FOR OTHERS EXCEPT AS AUTHORIZED BY SAMSUNG.
Comply with the threshold of substances which are specified in 0QA-2049

BLOCK NAME: high_x12_union
BLK PAGE NO.: 11 OF 19

10_X12 POWER / GND

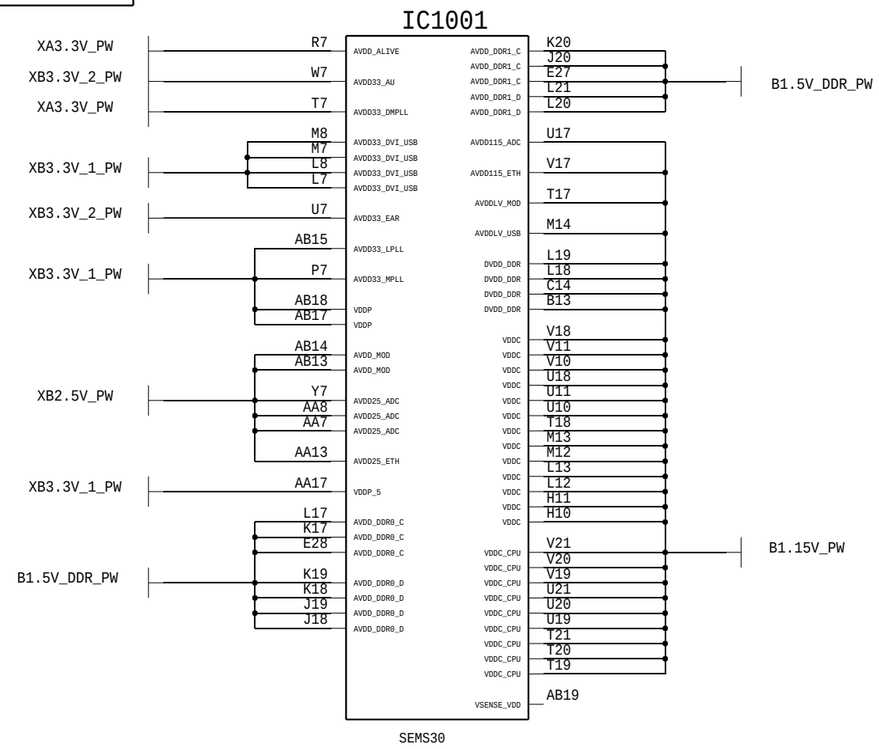

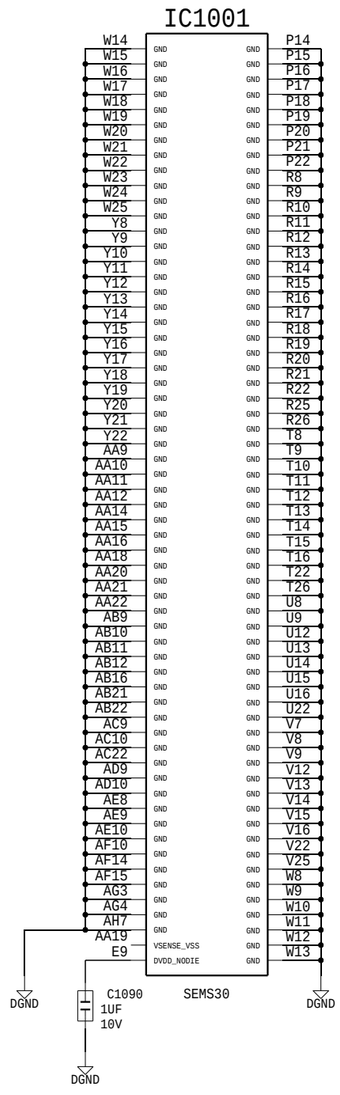

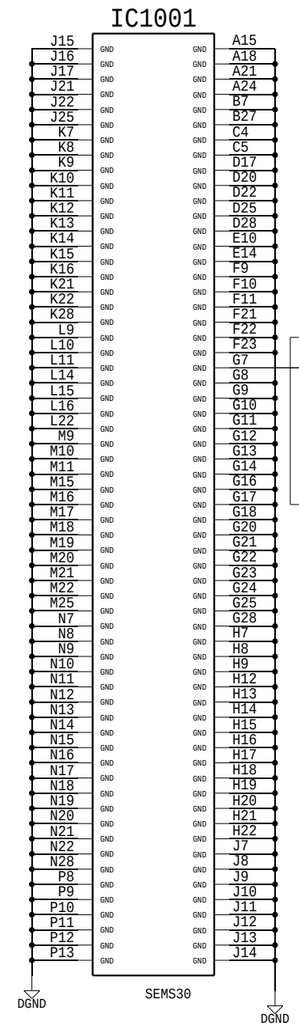

EFUSE

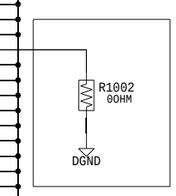

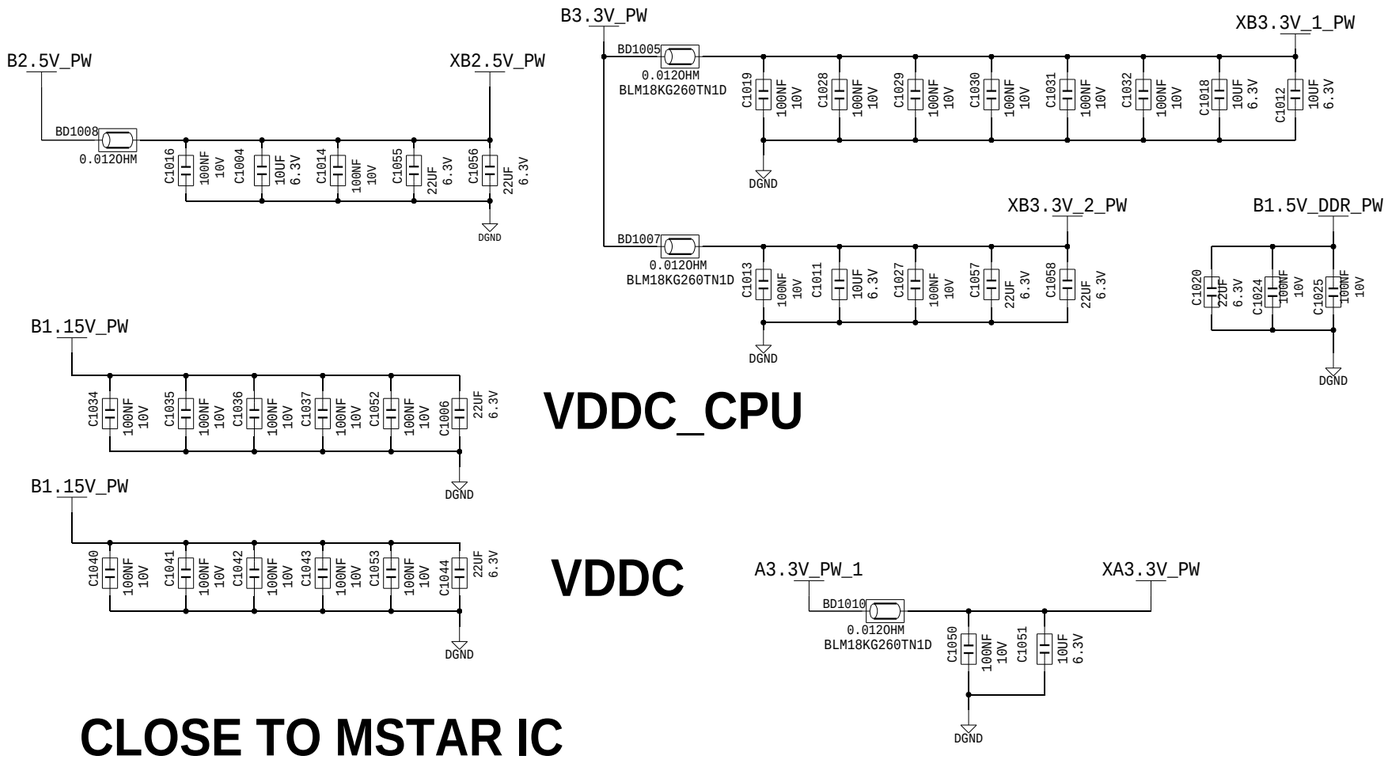

VDDC_CPU

VDDC

CLOSE TO MSTAR IC

PROJECT NAME: high_x12_union	A3		DRAWN BY: Unknown
			CHECKED BY: Unknown
SAMSUNG	DEV.STEP: Unknown	REV.: 1.0	APPROVED BY: Unknown
LAST EDITED TIME: Mon Jan 14 16:17:59 2013			TOTAL PAGE NO.: 10 OF 18

SAMSUNG PROPRIETARY
THIS DOCUMENT CONTAINS CONFIDENTIAL
PROPRIETARY INFORMATION THAT IS
SAMSUNG ELECTRONIS CO'S PROPRIETARY.
DO NOT DISCLOSE TO OR DUPLICATE FOR OTHERS
EXCEPT AS AUTHORIZED BY SAMSUNG.
Comply with the threshold of substances
which are specified in 0QA-2049

BLOCK NAME: high_x12_union
BLK PAGE NO.: 12 OF 19

DDR3_A1_256M(1866)-1105-002430_X2_MIU0

11_X12 DDR / DDR3 MEMORY

DDR

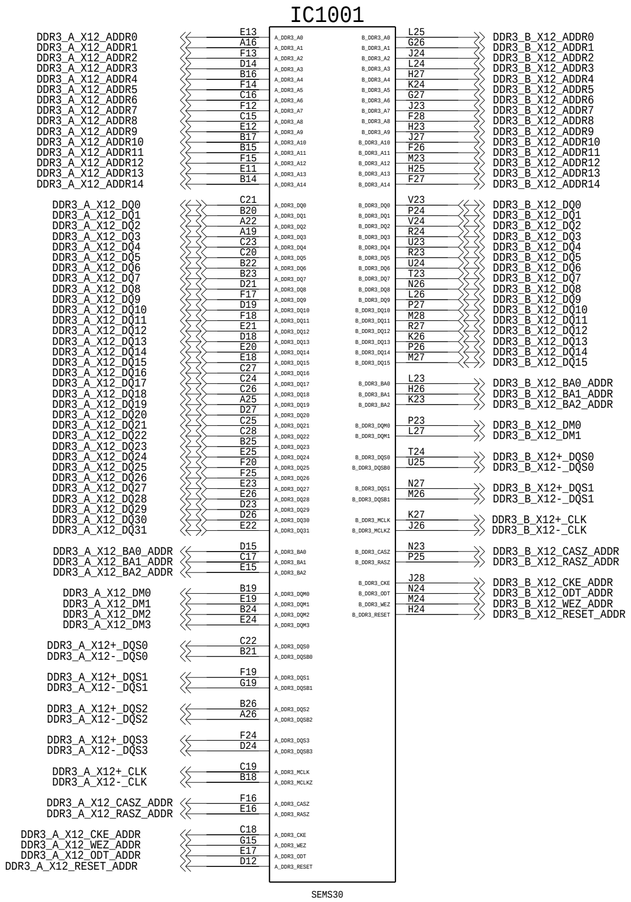

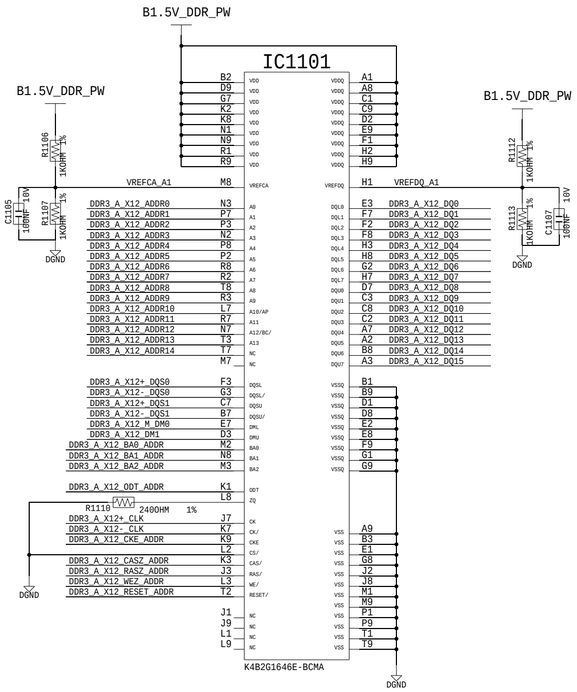

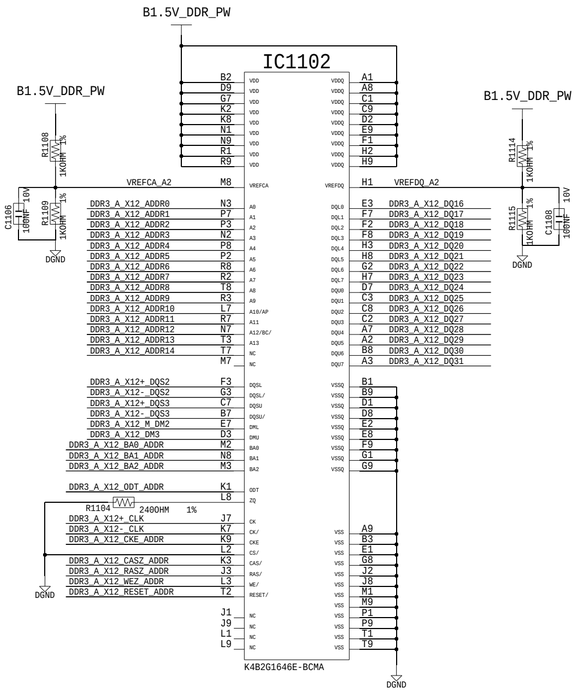

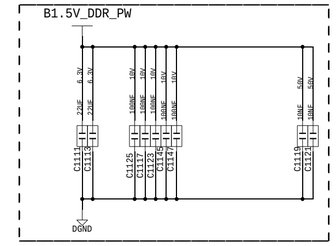

CLOSE TO IC1101 / 1102

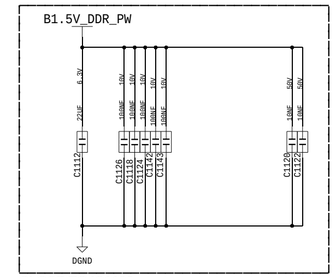

CLOSE TO IC1103

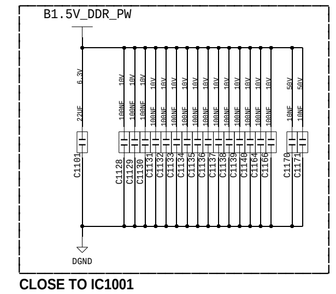

CLOSE TO IC1001

DDR3_B_512M(1866)-1105-002338_MIU1

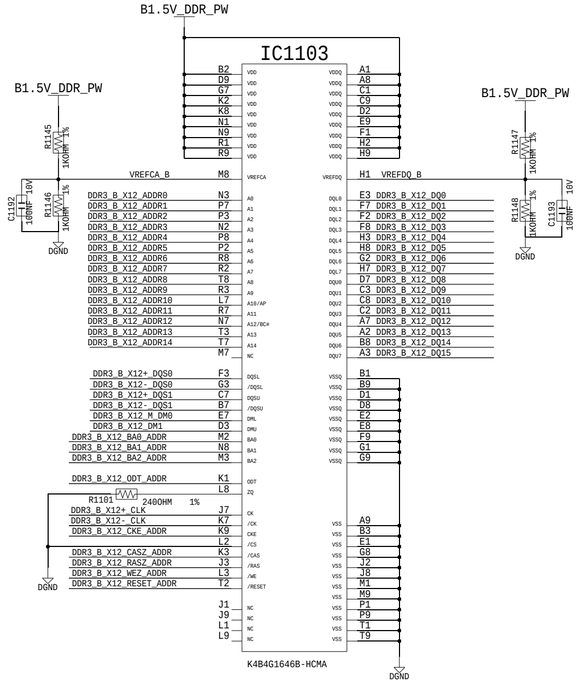

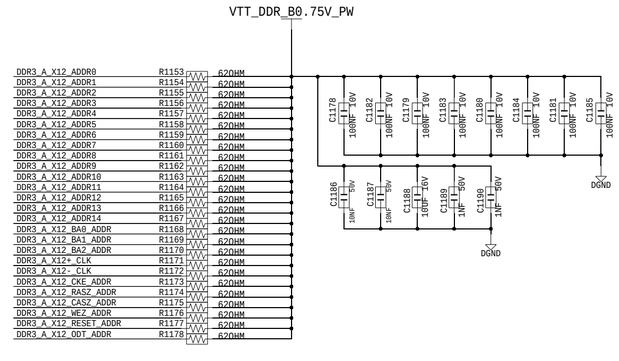

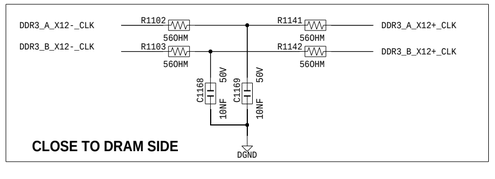

CLOSE TO DRAM SIDE

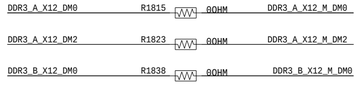

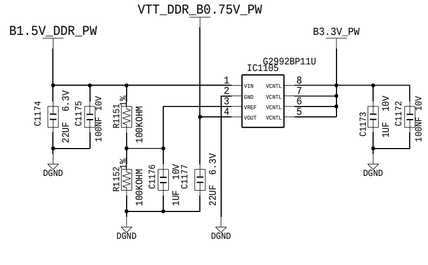

PROJECT NAME: high_x12_union	A2
DRAWN BY: Unknown	
CHECKED BY: Unknown	
SAMSUNG	DEV.STEP: Unknown / REV.: 1.0
APPROVED BY: Unknown	
LAST EDITED TIME: Mon Jan 14 16:17:44 2013	TOTAL PAGE NO.: 11 OF 18

SAMSUNG PROPRIETARY
THIS DOCUMENT CONTAINS CONFIDENTIAL
PROPRIETARY INFORMATION THAT IS
SAMSUNG ELECTRONIS CO'S PROPRIETARY.
DO NOT DISCLOSE TO OR DUPLICATE FOR OTHERS
EXCEPT AS AUTHORIZED BY SAMSUNG.
Comply with the threshold of substances
which are specified in 0QA-2049

BLOCK NAME: high_x12_union
BLK PAGE NO.: 13 OF 19

12_SUB MICOM FUNCTION / DEBUG PORT

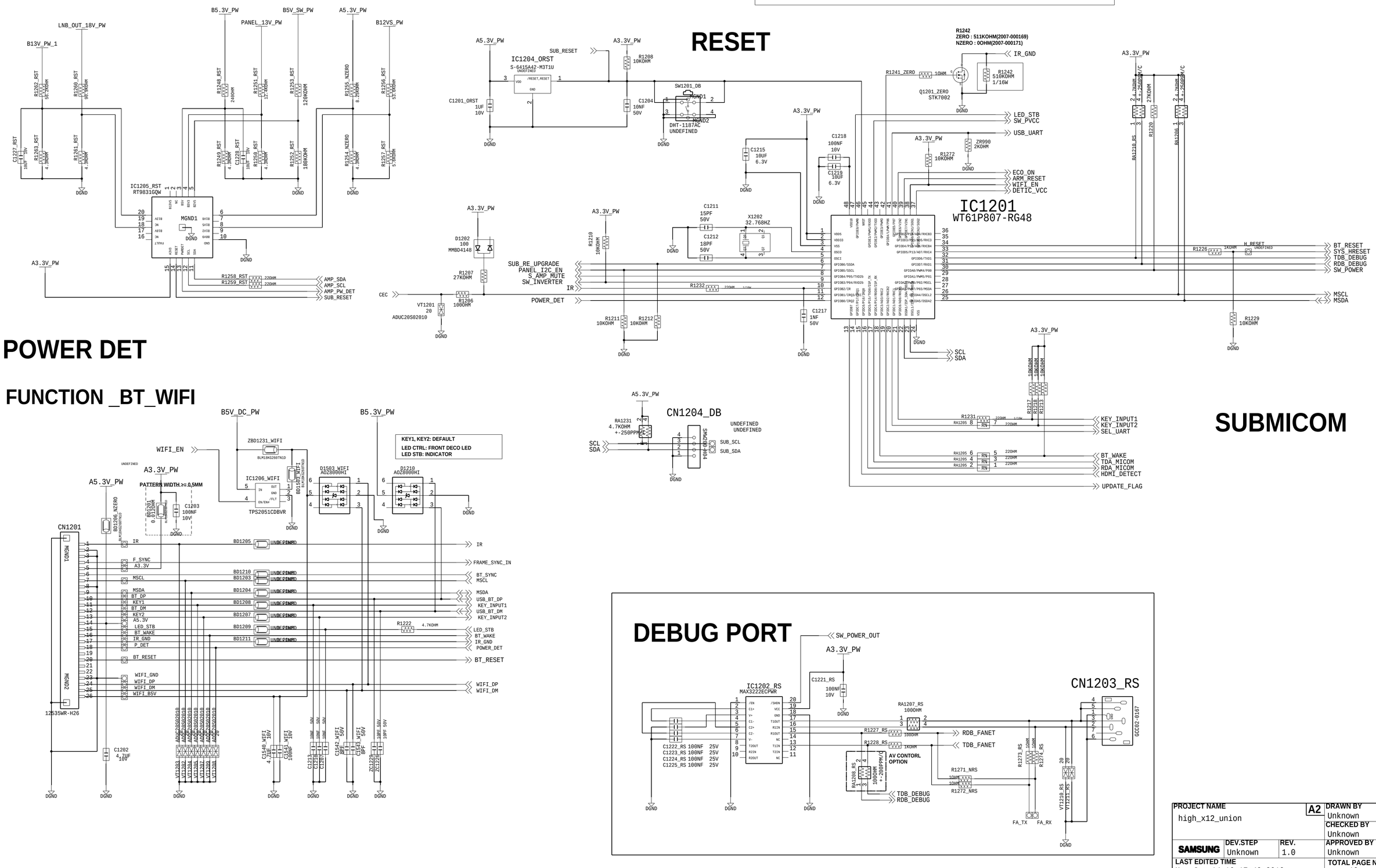

PROJECT NAME			A2	DRAWN BY
high_x12_union				Unknown
				CHECKED BY Unknown
SAMSUNG	DEV.STEP Unknown	REV. 1.0		APPROVED BY Unknown
LAST EDITED TIME Mon Jan 14 16:17:48 2013				TOTAL PAGE NO. 12 OF 18

SAMSUNG PROPRIETARY
THIS DOCUMENT CONTAINS CONFIDENTIAL PROPRIETARY INFORMATION THAT IS SAMSUNG ELECTRONIS CO'S PROPRIETARY. DO NOT DISCLOSE TO OR DUPLICATE FOR OTHERS EXCEPT AS AUTHORIZED BY SAMSUNG.
Comply with the threshold of substances which are specified in 0QA-2049

BLOCK NAME: high_x12_union
BLK PAGE NO.: 14 OF 19

13_X12 CI / NAND / SPI FLASH

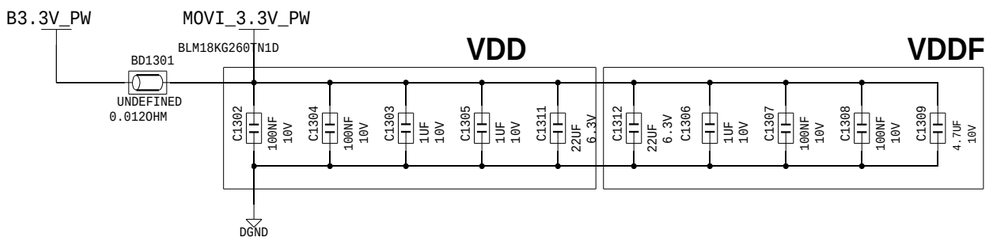

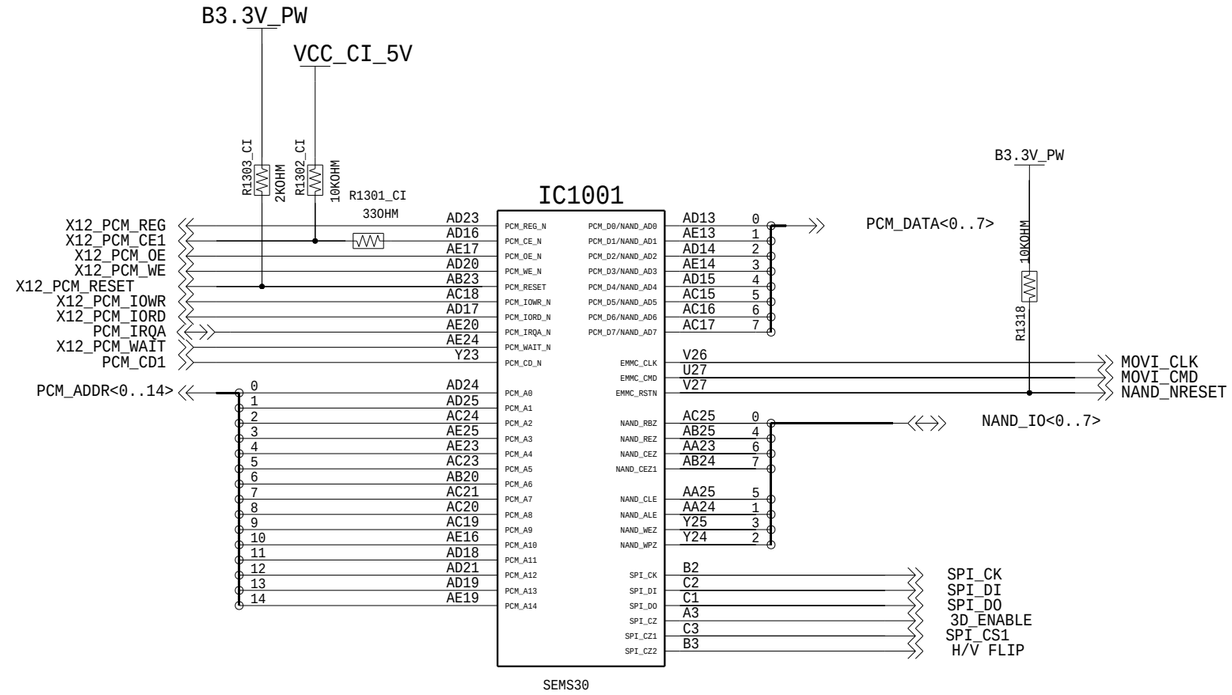

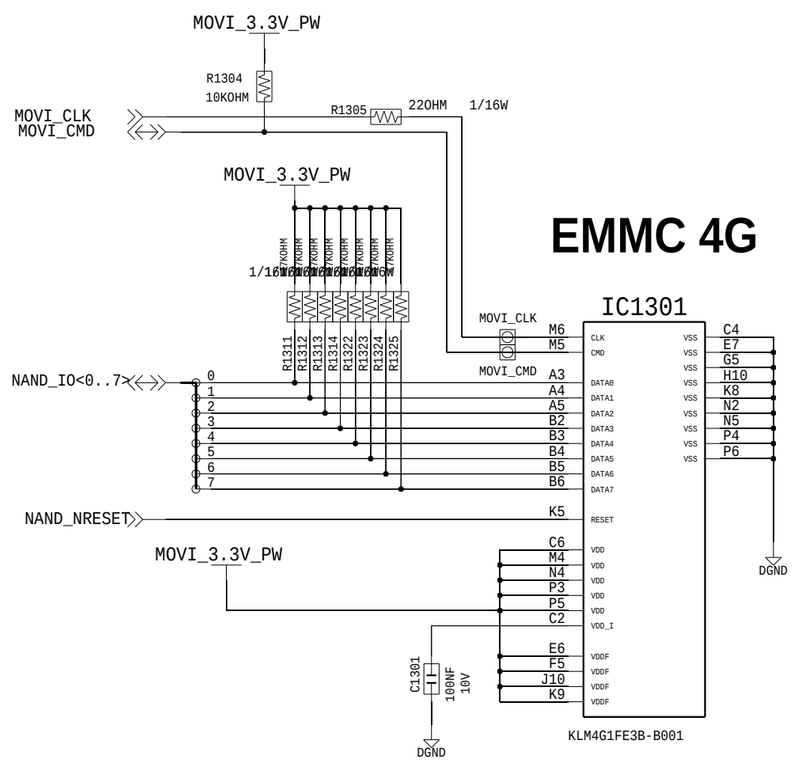

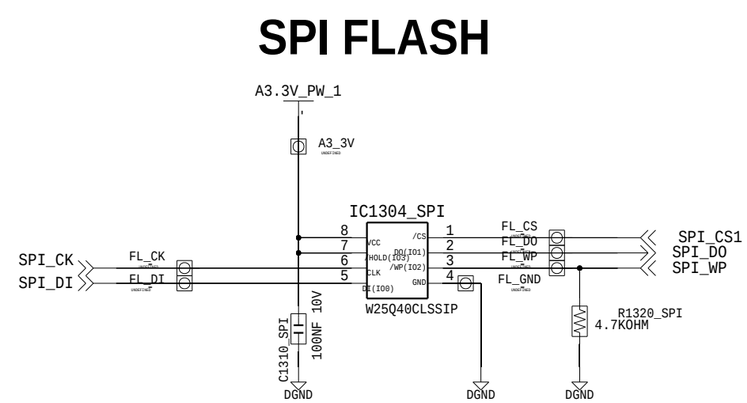

PROJECT NAME: high_x12_union		A3	DRAWN BY: Unknown
			CHECKED BY: Unknown
SAMSUNG	DEV.STEP: Unknown	REV.: 1.0	APPROVED BY: Unknown
LAST EDITED TIME: Mon Jan 14 16:17:51 2013			TOTAL PAGE NO.: 13 OF 18

D:/RND/2013/CAD/high_x12_union\high_x12_union.cpm

SAMSUNG PROPRIETARY
THIS DOCUMENT CONTAINS CONFIDENTIAL PROPRIETARY INFORMATION THAT IS SAMSUNG ELECTRONIS CO'S PROPRIETARY. DO NOT DISCLOSE TO OR DUPLICATE FOR OTHERS EXCEPT AS AUTHORIZED BY SAMSUNG.
Comply with the threshold of substances which are specified in 0QA-2049

BLOCK NAME: high_x12_union
BLK PAGE NO.: 15 OF 19

14_X12 LVDS / AUDIO / LAN

LVDS

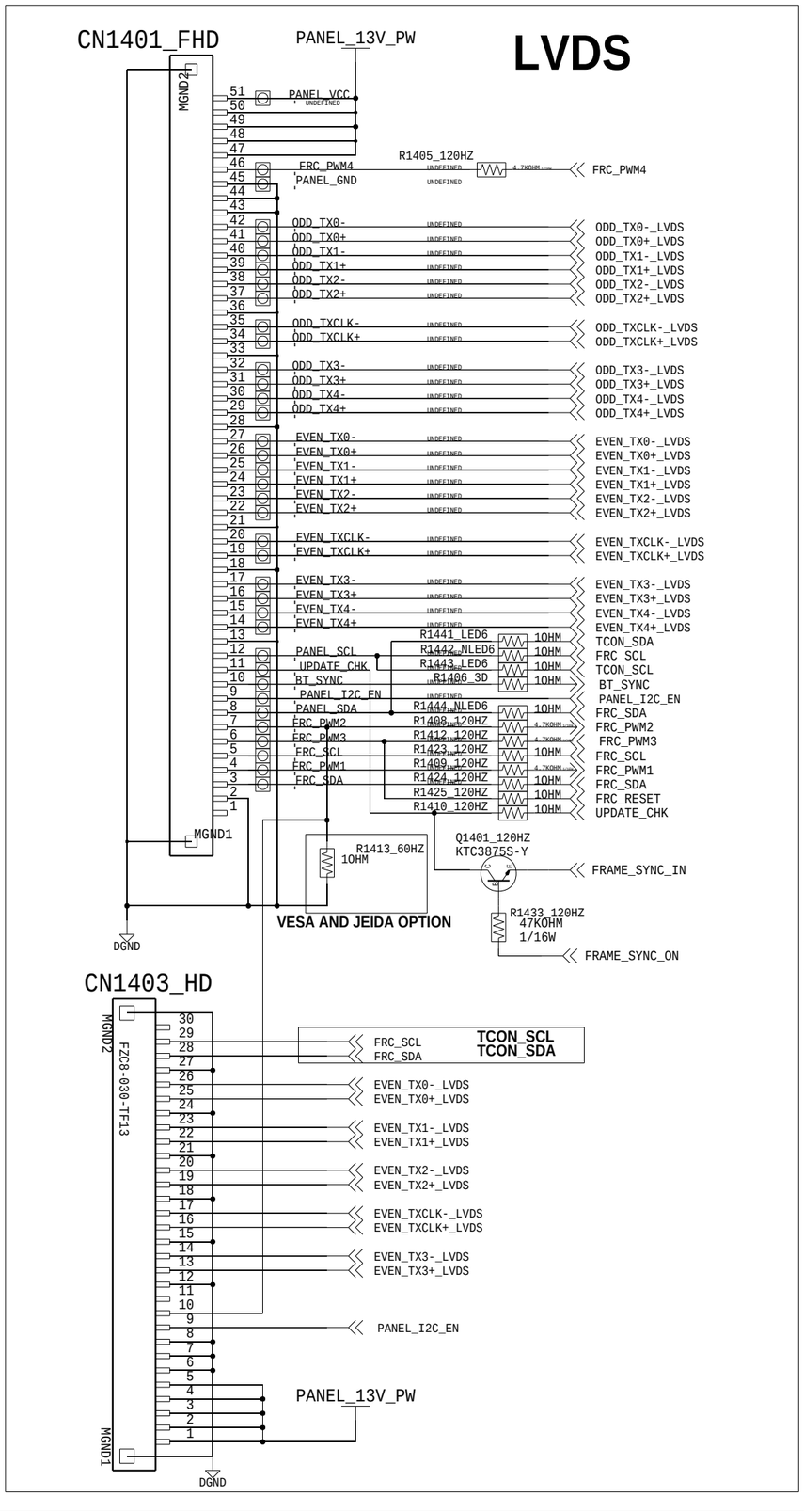

AUDIO

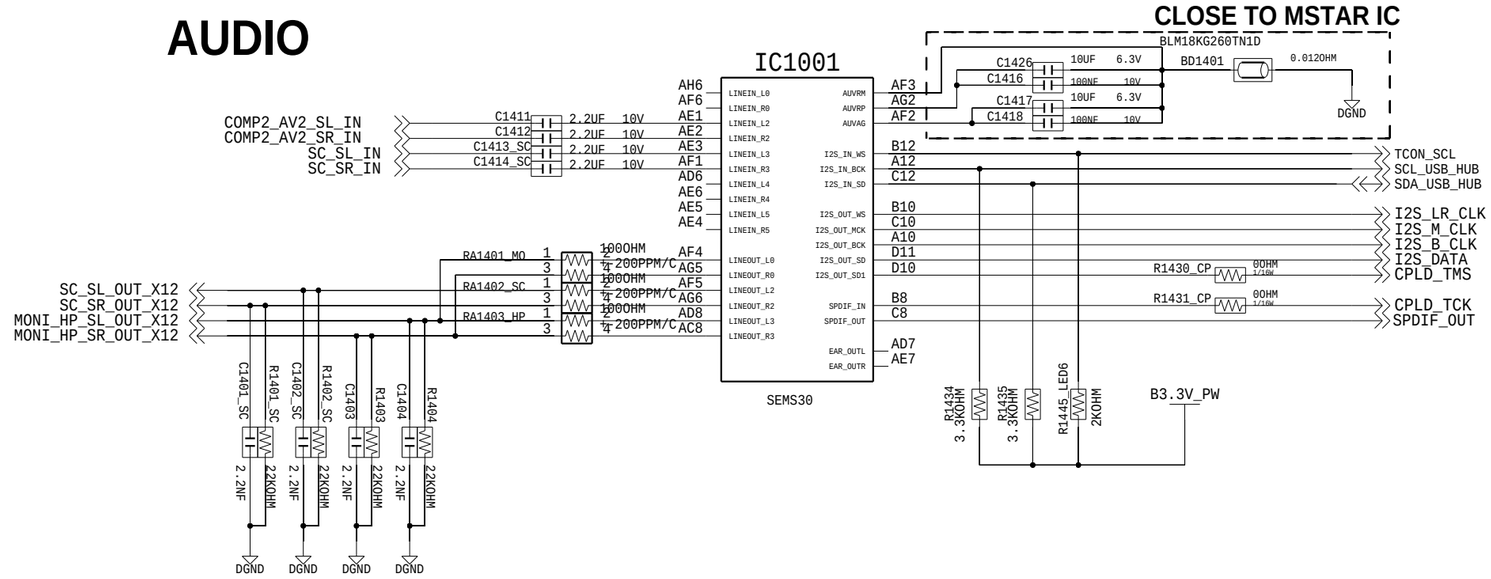

LVDS

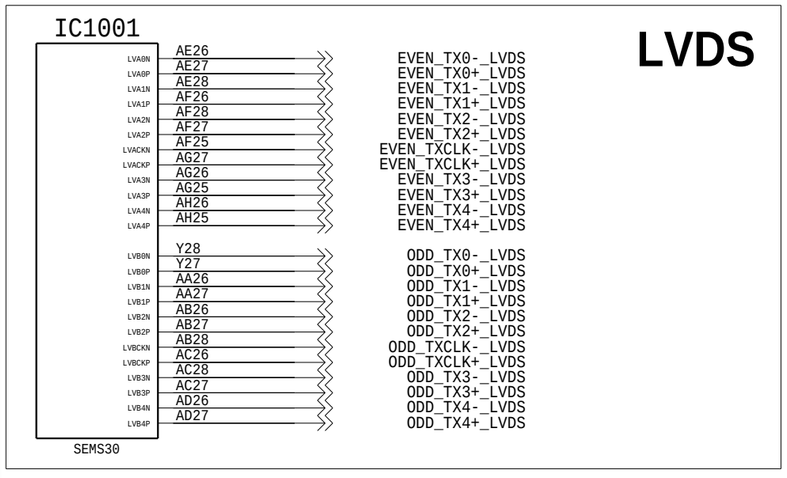

LAN

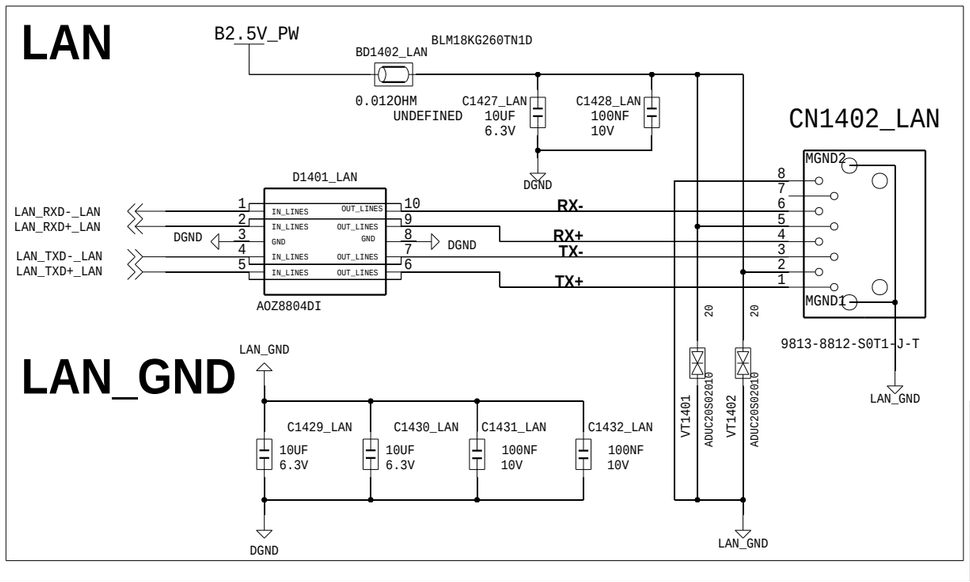

LAN_GND

PROJECT NAME: high_x12_union	A3		DRAWN BY: Unknown
			CHECKED BY: Unknown
SAMSUNG	DEV.STEP: Unknown	REV.: 1.0	APPROVED BY: Unknown
LAST EDITED TIME: Mon Jan 14 16:17:47 2013			TOTAL PAGE NO.: 14 OF 18

D:/RND/2013/CAD/high_x12_union\high_x12_union.cpm

SAMSUNG PROPRIETARY
THIS DOCUMENT CONTAINS CONFIDENTIAL PROPRIETARY INFORMATION THAT IS SAMSUNG ELECTRONIS CO'S PROPRIETARY. DO NOT DISCLOSE TO OR DUPLICATE FOR OTHERS EXCEPT AS AUTHORIZED BY SAMSUNG.
Comply with the threshold of substances which are specified in 0QA-2049

BLOCK NAME: high_x12_union
BLK PAGE NO.: 16 OF 19

15. X12 USB / USB1/2/3 WIFI

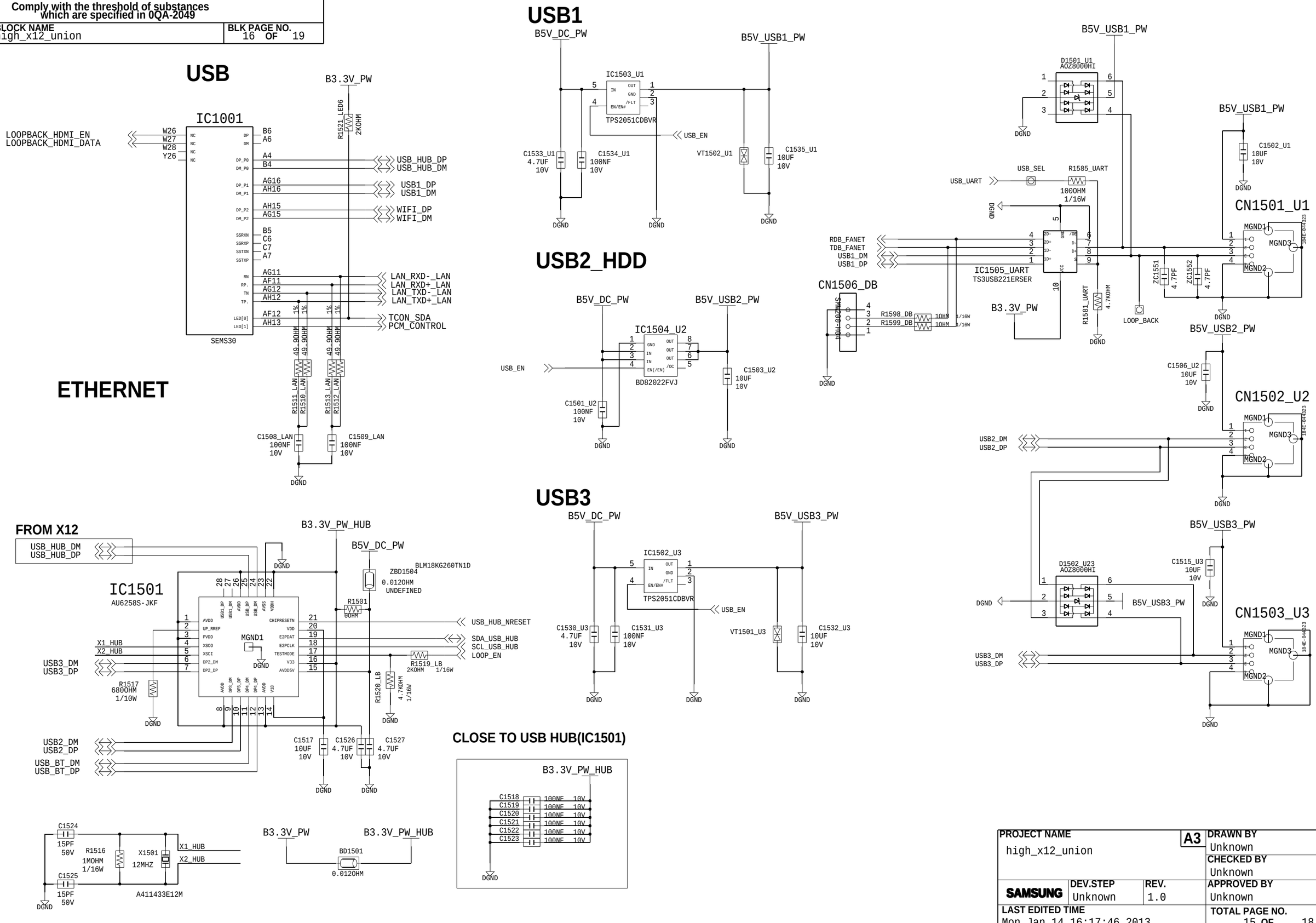

PROJECT NAME			A3	DRAWN BY
high_x12_union				Unknown
				CHECKED BY Unknown
SAMSUNG	DEV.STEP Unknown	REV. 1.0		APPROVED BY Unknown
LAST EDITED TIME Mon Jan 14 16:17:46 2013				TOTAL PAGE NO. 15 OF 18

SAMSUNG PROPRIETARY
THIS DOCUMENT CONTAINS CONFIDENTIAL PROPRIETARY INFORMATION THAT IS SAMSUNG ELECTRONIS CO'S PROPRIETARY. DO NOT DISCLOSE TO OR DUPLICATE FOR OTHERS EXCEPT AS AUTHORIZED BY SAMSUNG.
Comply with the threshold of substances which are specified in 0QA-2049

BLOCK NAME	BLK PAGE NO.
high_x12_union	17 OF 19

16_PCMCIA

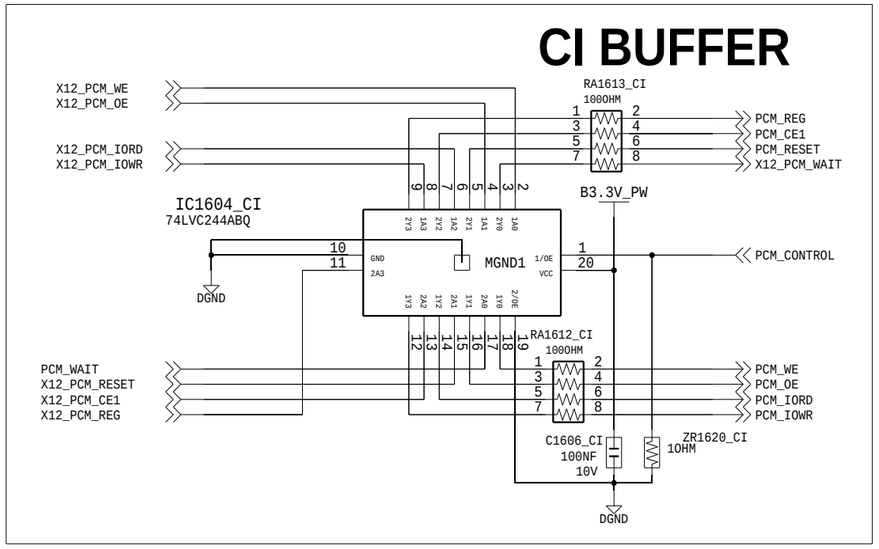

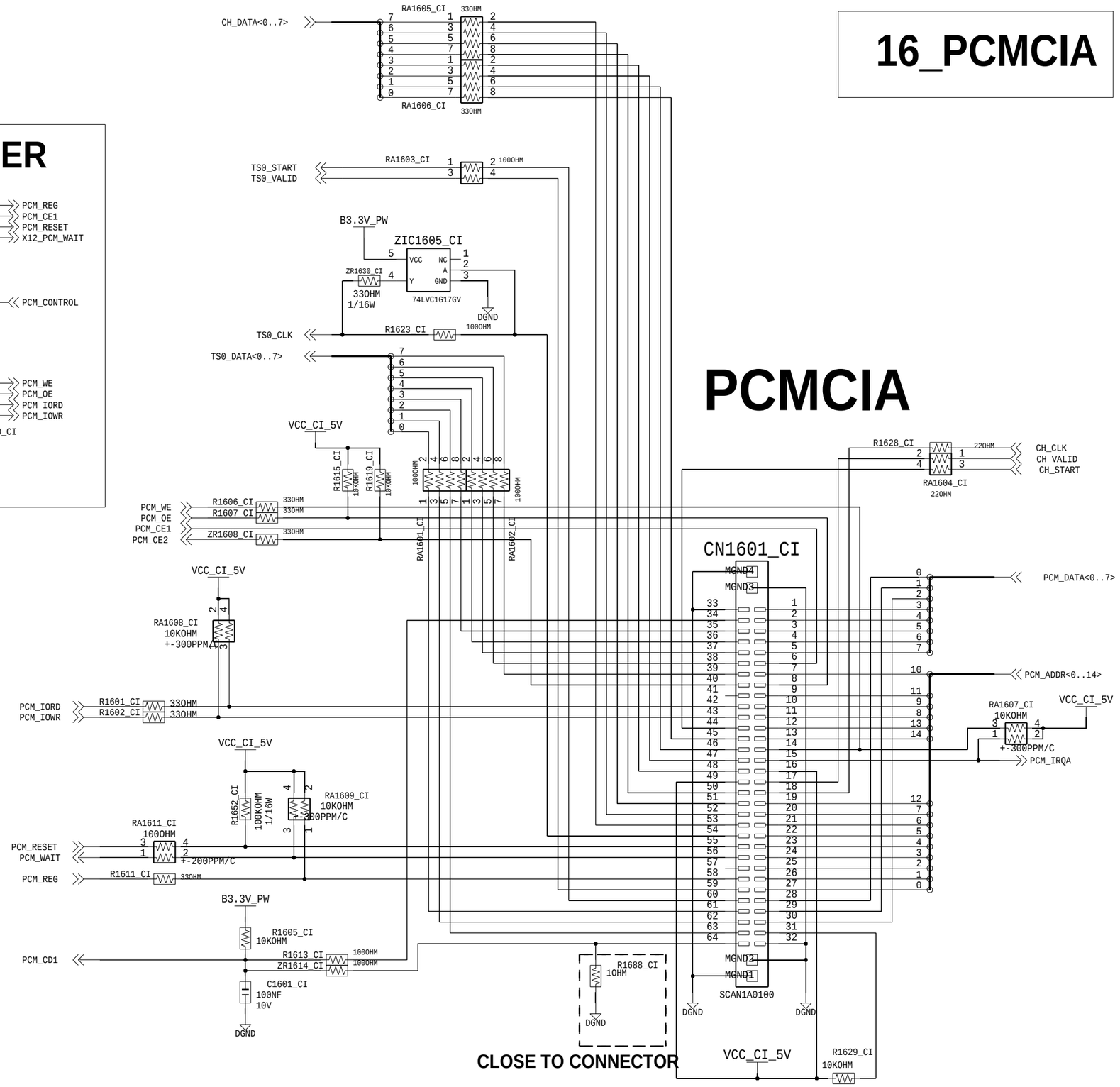

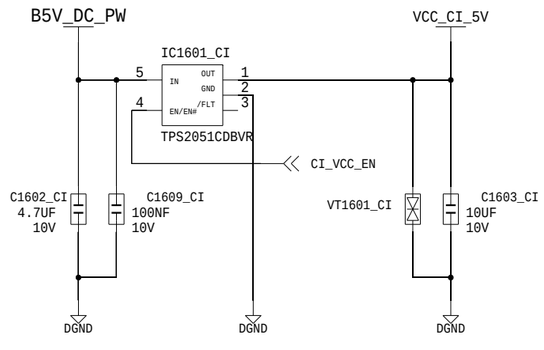

PROJECT NAME	A3	DRAWN BY
high_x12_union		Unknown
		CHECKED BY Unknown
SAMSUNG DEV.STEP Unknown	REV. 1.0	APPROVED BY Unknown
LAST EDITED TIME Mon Jan 14 16:17:57 2013		TOTAL PAGE NO. 16 OF 18

SAMSUNG PROPRIETARY
THIS DOCUMENT CONTAINS CONFIDENTIAL PROPRIETARY INFORMATION THAT IS SAMSUNG ELECTRONIS CO'S PROPRIETARY. DO NOT DISCLOSE TO OR DUPLICATE FOR OTHERS EXCEPT AS AUTHORIZED BY SAMSUNG.
Comply with the threshold of substances which are specified in 0QA-2049

BLOCK NAME: high_x12_union
BLK PAGE NO.: 18 OF 19

17_IR BLASTER

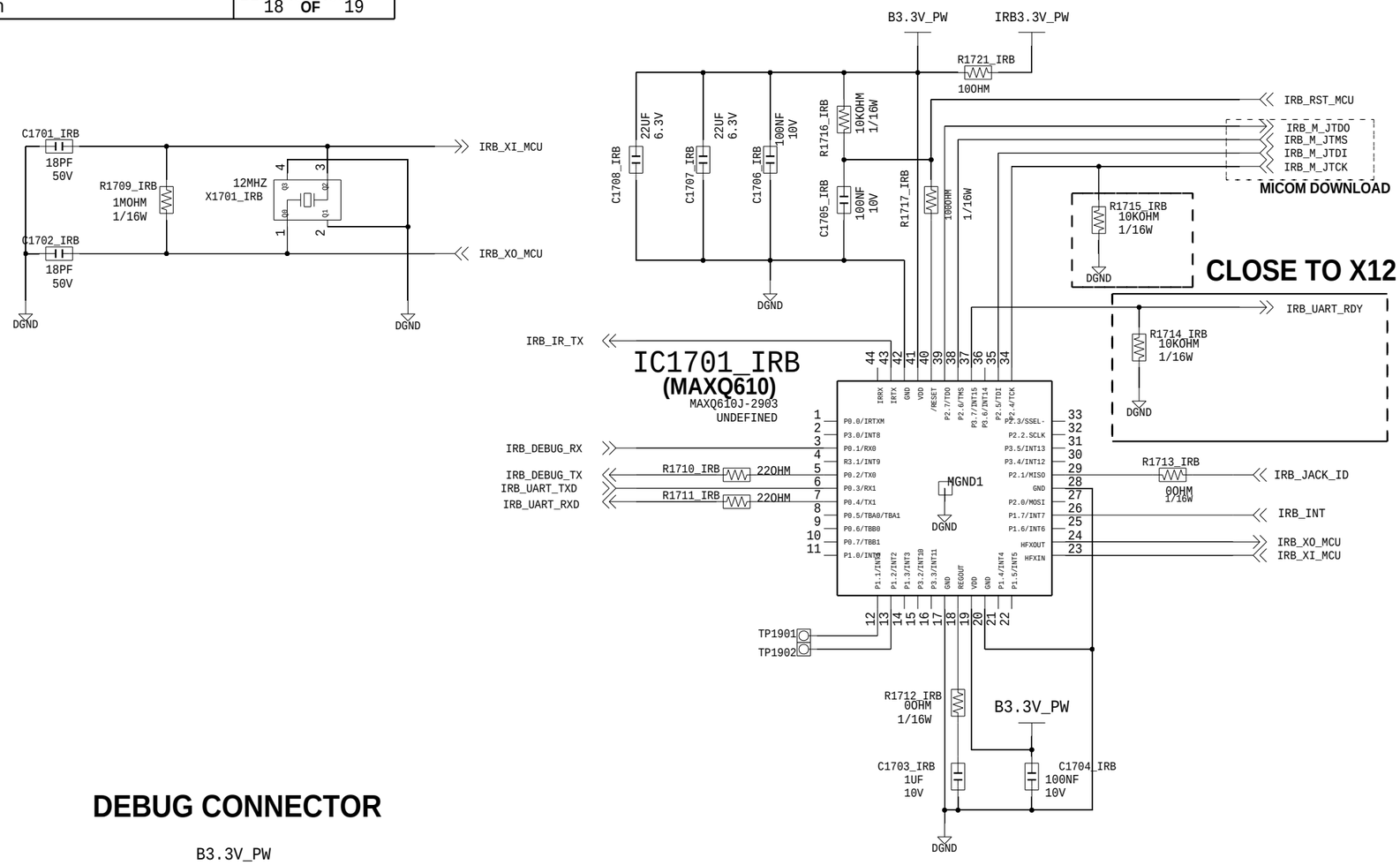

DEBUG CONNECTOR

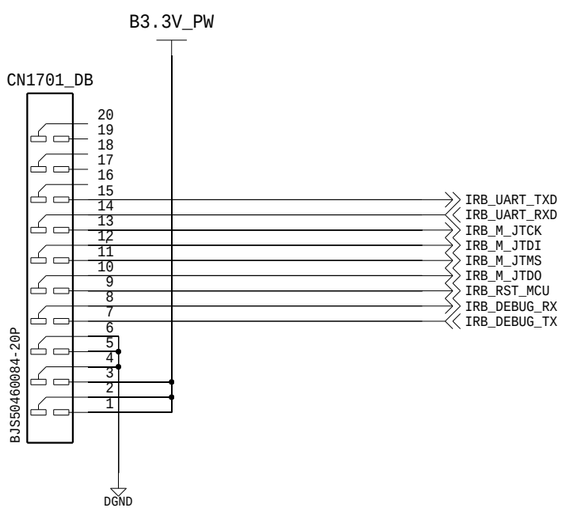

IRB EXT IR

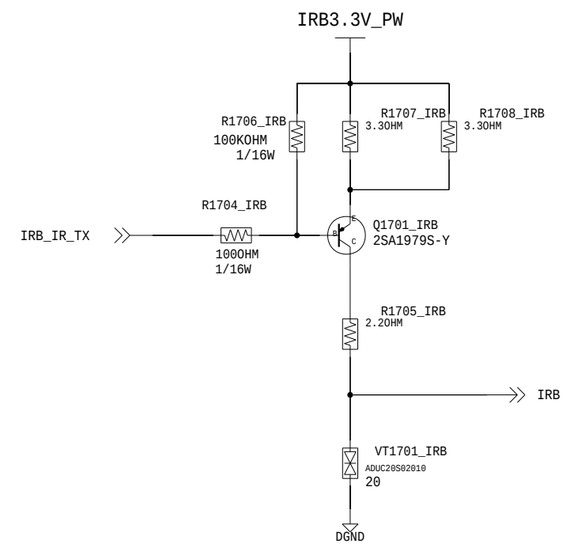

PROJECT NAME: high_x12_union	A3		DRAWN BY: Unknown
			CHECKED BY: Unknown
SAMSUNG	DEV.STEP: Unknown	REV.: 1.0	APPROVED BY: Unknown
LAST EDITED TIME: Mon Jan 14 16:18:03 2013			TOTAL PAGE NO.: 17 OF 18

SAMSUNG PROPRIETARY
THIS DOCUMENT CONTAINS CONFIDENTIAL PROPRIETARY INFORMATION THAT IS SAMSUNG ELECTRONIS CO'S PROPRIETARY. DO NOT DISCLOSE TO OR DUPLICATE FOR OTHERS EXCEPT AS AUTHORIZED BY SAMSUNG.
Comply with the threshold of substances which are specified in 0QA-2049

BLOCK NAME	BLK PAGE NO.
high_x12_union	19 OF 19

18_CPLD / SENSOR

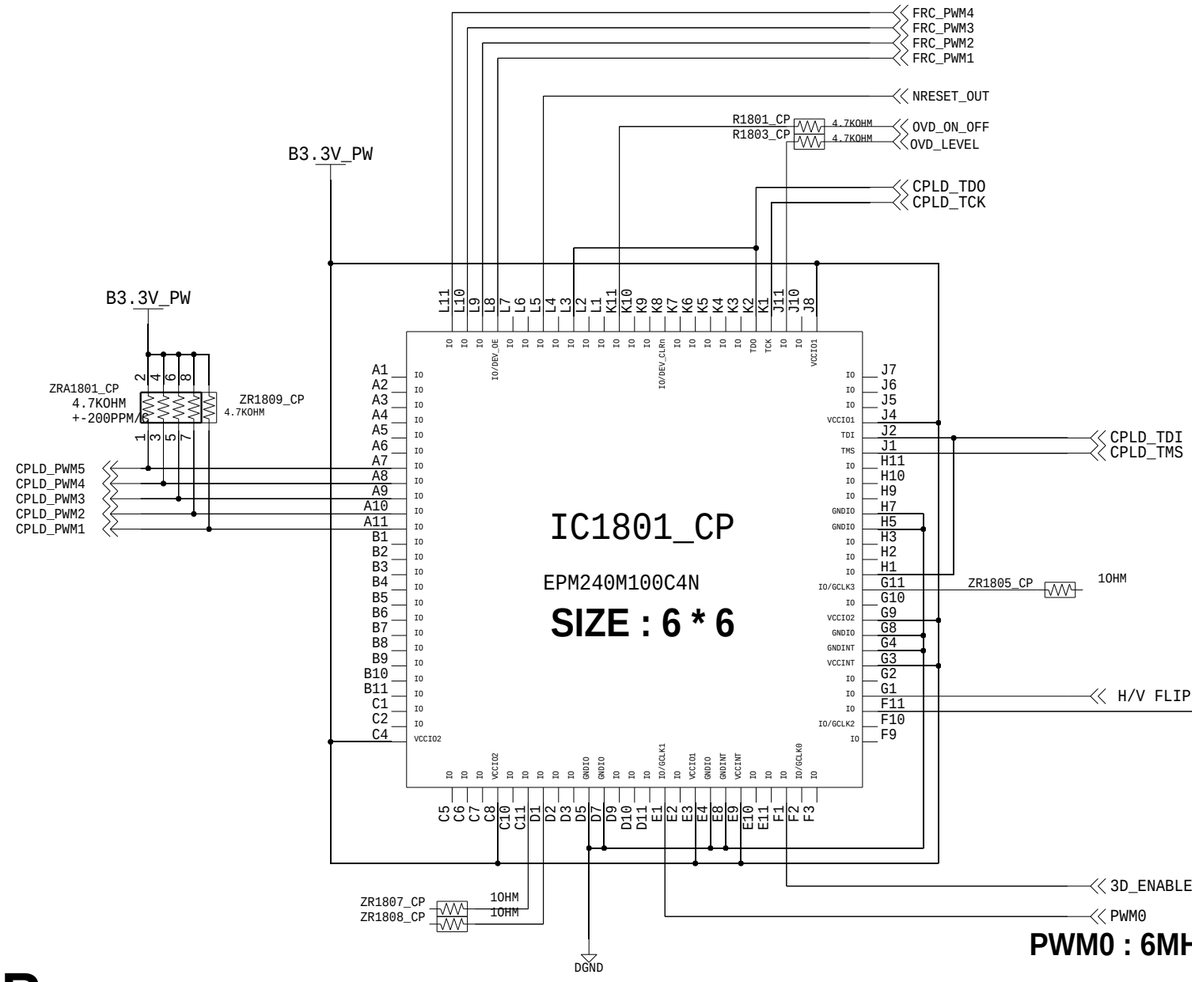

PWM0 : 6MHZ CLK

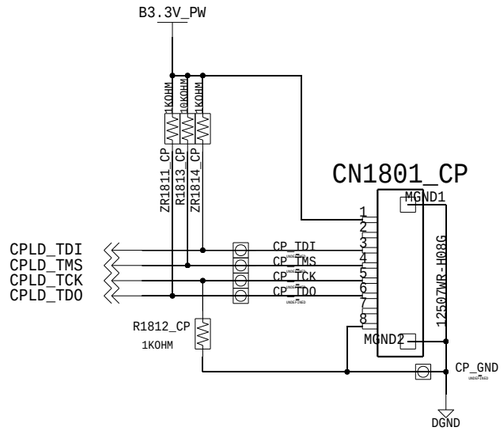

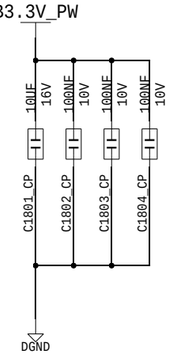

SENSOR

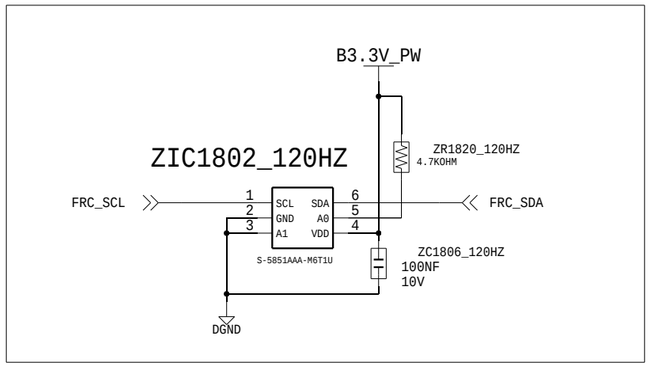

PROJECT NAME			DRAWN BY
high_x12_union		A3	Unknown
			CHECKED BY Unknown
SAMSUNG	DEV.STEP Unknown	REV. 1.0	APPROVED BY Unknown
LAST EDITED TIME Mon Jan 14 16:18:02 2013			TOTAL PAGE NO. 18 OF 18