SAMSUNG

TFT-LCD-TV

Chassis GSM26KU
GSM32KU
GSM40KU

Model LN-S2641D
LN-S3241D
LN-S4041D

SERVICE Manual

TFT-LCD TV

Fashion Feature

- RF, DVI-D, PC(Analog), Component, Video, S-Video
- Brightness : 500cd/㎡
- Contrast Ratio :
  26": 800:1, 32": 1000:1, 40": 800:1
- Respense time : 16ms
- Dynamic contrast
- PIP (on PC only)

- This Service Manual is a property of Samsung Electronics Co., Ltd.
  Any unauthorized use of Manual can be punished under applicable International and/or domestic law.

Samsung Electronics Co.,Ltd.
416, Maetan-3Dong, Yeongtong-Gu, Suwon City,
Gyeonggi-Do, Korea, 443-742
Printed in Korea
P/N : BN82-00139D-00
URL : http://itself.sec.samsung.co.kr/

Copyright

©2006 by Samsung Electronics Co., Ltd.

All rights reserved.

This manual may not, in whole or in part, be copied, photocopied, reproduced, translated, or converted to any electronic or machine readable form without prior written permission of Samsung Electronics Co., Ltd.

GSM26KU/GSM32KU/GSM40KU Service Manual

First edition April 2006.

Printed in Korea.

Trademarks

Samsung is the registered trademark of Samsung Electronics Co., Ltd.

GSM26KU/GSM32KU/GSM40KU and MacMaster Cable Adapter are trademarks of Samsung Electronics Co., Ltd.

Macintosh, Power Macintosh are trademarks of Apple Computer, Inc.

All other trademarks are the property of their respective owners.

Contents

1 Precautions ····· 1-1

1-1 Safety Precautions ····· 1-1

1-2 Servicing Precautions ····· 1-2

1-3 Electrostatically Sensitive Devices (ESD) Precautions ····· 1-2

1-4 Installation Precautions ····· 1-3

2 Product specifications ····· 2-1

2-1 Fashion Feature ····· 2-1

2-2 Specifications ····· 2-2

2-3 Option Specification ····· 2-6

3 Alignments and Adjustments ····· 3-1

3-1 General Alignment Instuction ····· 3-1

3-2 Factory Mode Adjustments ····· 3-2

3-3 White Balance - Calibration ····· 3-9

3-4 White Ratio (Balance) Adjustment ····· 3-10

3-5 Servicing Information ····· 3-11

4 Troubleshooting ····· 4-1

4-1 No Power ····· 4-1

4-2 No Video (Analog PC Signal) ····· 4-2

4-3 No Video (HDMI - Digital Signal) ····· 4-4

4-4 No Picture (Tuner_CVBS) ····· 4-6

4-5 No Picture (Tuner DTV TS) ····· 4-8

4-6 No Picture (Video CVBS) ····· 4-10

4-7 No Picture(S-Video Y/C) ····· 4-11

4-8 No Picture(Component1, 2 : 480i, 480p, 720p, 1080i[Y, Pb, Pr]) ····· 4-13

4-9 No Sound ····· 4-15

5 Exploded View and Parts List ····· 5-1

5-1 LN-S2641D Exploded View ····· 5-1

5-2 LN-S2641D Parts list ····· 5-2

5-3 LN-S3241D Exploded View ····· 5-3

5-4 LN-S3241D Parts list ····· 5-4

5-5 LN-S4041D Exploded View ····· 5-5

5-6 LN-S4041D Parts list ····· 5-6

6 Electrical Parts List ····· 6-1

6-1 LN-S2641D Parts List ····· 6-1

6-2 LN-S3241D Parts List ····· 6-23

6-3 LN-S4041D Parts List ····· 6-45

7 Block Diagram ····· 7-1

Contents

8 Wiring Diagram ····· 8-1

8-1 Wiring Diagram ····· 8-1

9 Schematic Diagrams ····· 9-1

9-1 Power Schematic Diagram ····· 9-1

9-2 Stand by Micom Schematic Diagram ····· 9-2

9-3 STV8257 Diagram ····· 9-3

9-4 STA323W Schematic Diagram ····· 9-4

9-5 TUNER_SPLITTER Schmetic Diagram ····· 9-5

9-6 AV_IN_OUT_1 Schmetic Diagram ····· 9-6

9-7 AV_IN_OUT_2 Schmetic Diagram ····· 9-7

9-8 PC_HDMI_INPUT Schmetic Diagram ····· 9-8

9-9 SVP_PX Schmetic Diagram ····· 9-9

9-10 LBE Schmetic Diagram ····· 9-10

9-11 SVP_PX_POWER Schmetic Diagram ····· 9-11

9-12 SVP_PX_DDR Schmetic Diagram ····· 9-12

9-13 LAKE_I2C_GPIO_USB_UART_ETC Schmetic Diagram ····· 9-13

9-14 LAKE_I2SINOUT_YCbCr_OUT Schmetic Diagram ····· 9-14

9-15 LAKE_DDR Schmetic Diagram ····· 9-15

9-16 LAKE_FLASH_DEBUG Schmetic Diagram ····· 9-16

9-17 LAKE_POWER Schmetic Diagram ····· 9-17

10 Operating Instructions and Installation ····· 10-1

10-1 Front ····· 10-1

10-2 Connection Panel ····· 10-2

10-3 Remote Control ····· 10-4

11 Disassembly and Reassembly ····· 11-1

11-1 Disassembly ····· 11-1

11-2 Reassembly ····· 11-5

12 PCB Diagram ····· 12-1

12-1 Main PCB Diagram ····· 12-1

12-2 Power Inverter ····· 12-2

13 Circuit Descriptions ····· 13-1

13-1 Block description ····· 13-1

14 Reference Infomation ····· 14-1

14-1 Technical Terms ····· 14-1

14-2 Pin Assignments ····· 14-4

14-3 Timing Chart ····· 14-6

14-4 Panel Description ····· 14-10

10 Operating Instructions and Installation

10-1 Front

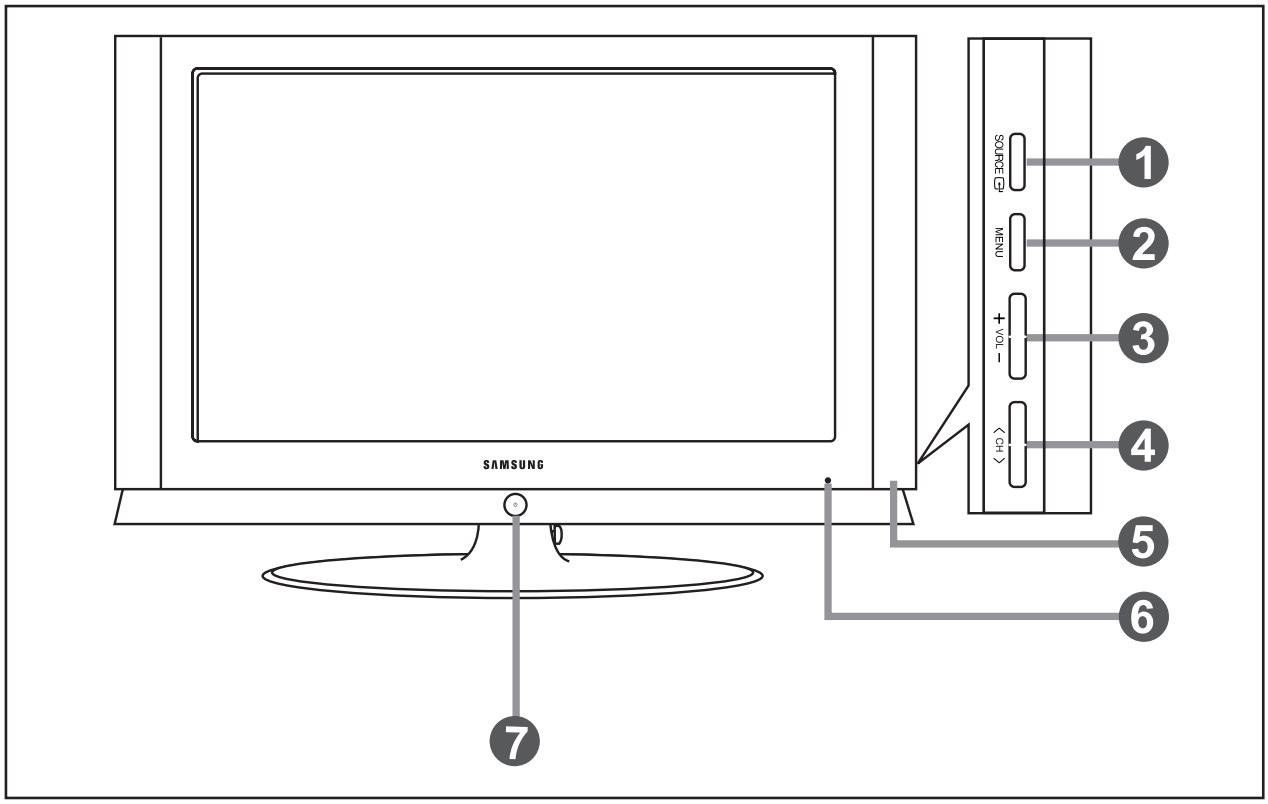

- The product color and shape may vary depending on the model.

1. SOURCE

Toggles between all the available input sources (TV, AV1, AV2, S-Video1, S-Video2, Component, PC, HDMI1, HDMI2).

In the on-screen menu, use this button as you would use the ENTER button on the remote control.

2. MENU

Press to see an on-screen menu of your TV's features.

3. + VOL −

Press to decrease or increase the volume.

In the on-screen menu, use the + VOL − buttons as you would use the ◄and► buttons on the remote control.

4. < CH >

Press to change channels.

In the on-screen menu, use the < CH > buttons as you use the ▼and▲ buttons on the remote control.

5. SPEAKERS

6. REMOTE CONTROL SENSOR

Aim the remote control towards this spot on the TV.

7. (POWER)

Press to turn the TV on and off.

POWER INDICATOR

Blinks and turns off when the power is on and lights up in stand-by mode.

10-2 Connection Panel

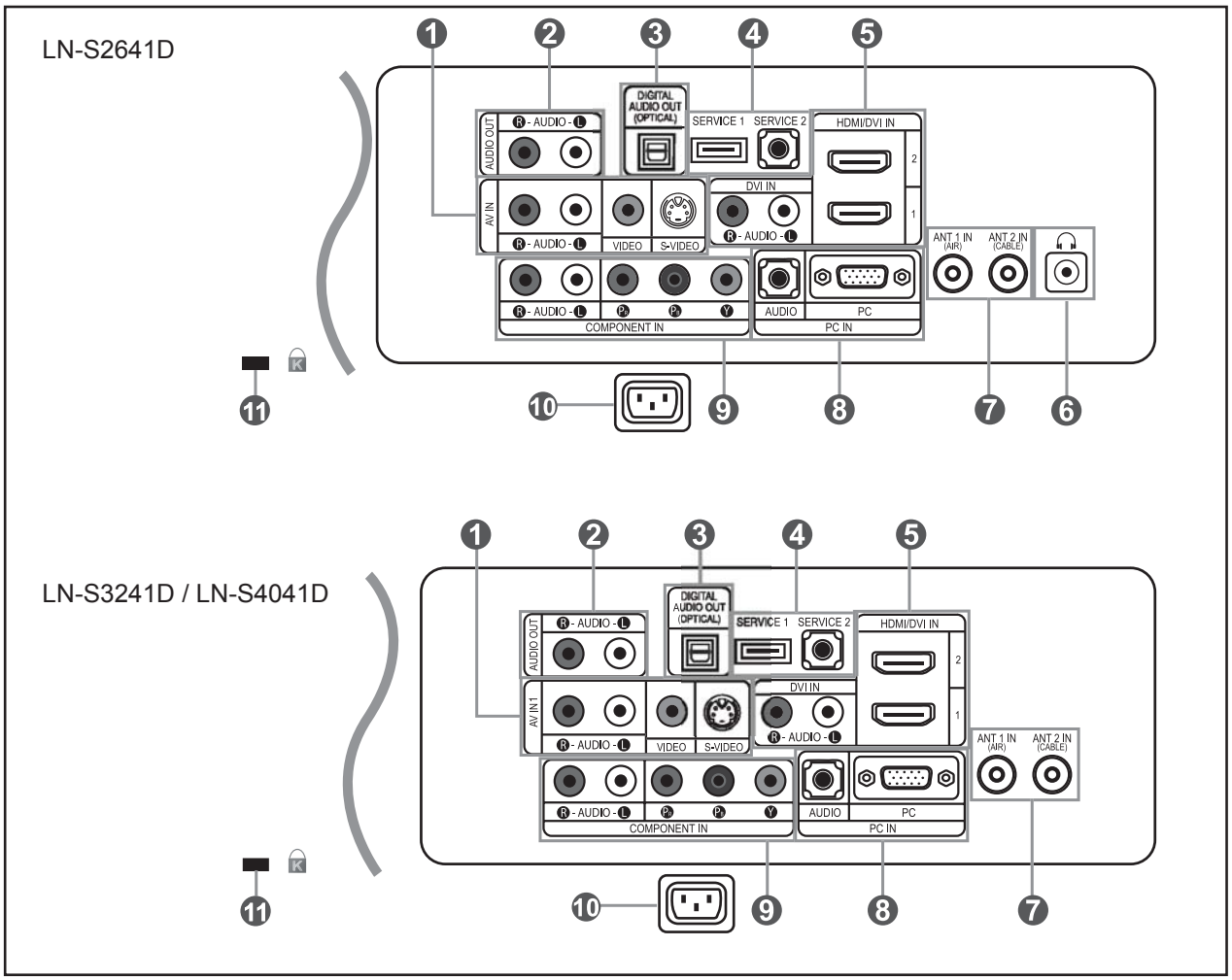

1. AV IN 1

Video and audio inputs for external devices, such as a camcorder or VCR.

S-VIDEO 1

Connect an S-Video signal from a camcorder or VCR.

2. AUDIO OUT

Connect to the audio input jacks on your Amplifier/ Home theater.

3. DIGITAL AUDIO OUT (OPTICAL)

Connect to a Digital Audio component.

4. SERVICE 1/SERVICE 2

Connector for service only.

5. HDMI/DVI IN 1/2, DVI IN

Connect to the HDMI jack of a device with an HDMI output.

Use the HDMI/DVI terminal for DVI connection to an external device. You should use the DVI to HDMI cable or DVI-HDMI adapter (DVI to HDMI) for the connection, and the DVI IN 'R -AUDIO -L' terminal for audio.

- HDMI/DVI IN terminal does not support PC.
- No sound connection is needed for an HDMI to HDMI connection.

6. HEADPHONE (LN-S2641D)

Connect a set of external headphones for private lis tening.

7. ANT 1 IN/ANT 2 IN

Connect to an antenna or to a cable TV system.

8. PC IN

Connect to the video and audio output jacks on your PC.

9. COMPONENT IN

Connect component video/audio.

10. POWER INPUT

Connect the supplied power cord.

11. KENSINGTON LOCK

The Kensington lock (optional) is a device used to physically fix the system when used in a public place.

If you want to use a locking device, contact the deal er where you purchased the TV.

The place of the Kensington Lock may be different depending on its model.

10-2-1 Side Panel Jacks(LN-S3241D/LN-S4041D)

- Use the left side panel jacks to connect a component that is used only occasionally, such as a camcorder or video game.

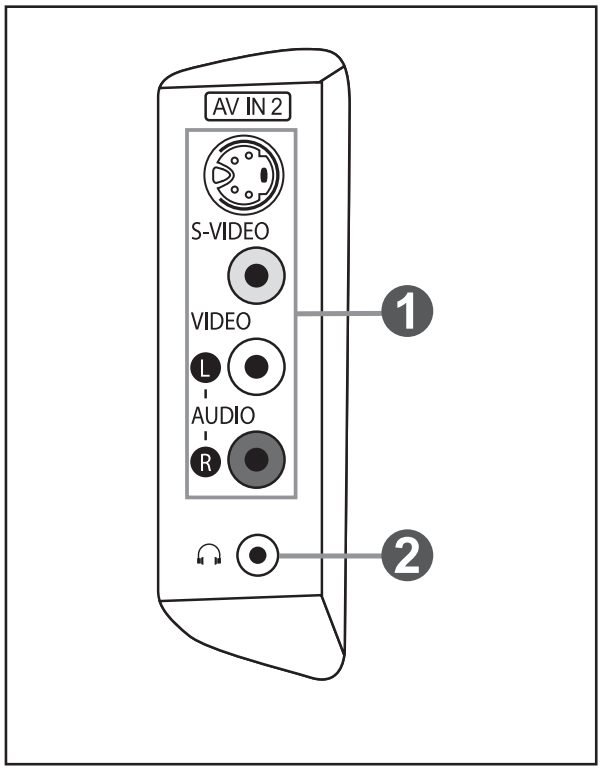

1. AV IN 2

Video and audio inputs for external devices.

S-VIDEO IN 2

Video inputs for external devices with an S-Video output.

2. HEADPHONE

Connect a set of external headphones for private lis tening.

	Speaker			Audio Out		
	RF	AV, S-Video	Component, PC, HDMI	RF	AV, S-Video	Component, PC, HDMI
Internal Mute Off	Speaker Output	Speaker Output	Speaker Output	Speaker Output	Speaker Output	Speaker Output
Internal Mute On	Mute	Mute	Mute	Speaker Output	Speaker Output	Speaker Output
Video No Signal	Mute	Mute	Mute	Mute	Speaker Output	Speaker Output

10-3 Remote Control

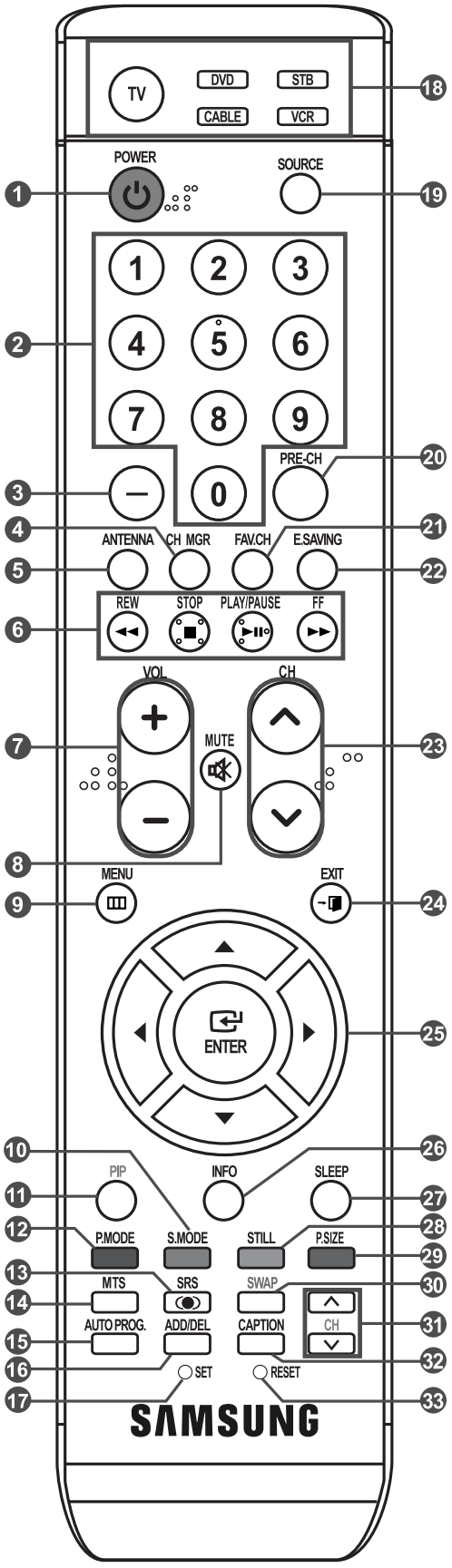

- This is a special remote control for the visually impaired, and has Braille points on the Power, Channel and Volume buttons.

❶ **POWER** ⏻
Turns the TV on and off.

❷ **NUMERIC BUTTONS**
Press to change the channel.

❸ **–**
Press to select additional channels (digital and analog) being broadcast by the same station. For example, to select channel “54-3”, press “54”, then press “**–**” and “3”.

❹ **CH MGR**
It displays “Channel Manager” on the screen.

❺ **ANTENNA**
Press to select “AIR” or “CABLE”.

❻ **VCR/DVD Functions**
- Rewind
- Stop
- Play/Pause
- Fast/Forward

❼ **VOL ⊕ / VOL ⊖**
Press to increase or decrease the volume.

❽ **(MUTE)**
Press to temporarily cut off the sound.

❾ **MENU**
Displays the main on-screen menu.

❿ **S.MODE**
Sound mode selection.

⓫ **PIP**
Picture-in Picture ON/OFF.

⓬ **P.MODE**
Picture effect selection.

⓭ **SRS**
Selects TruSurround XT mode.

⓮ **MTS**
Press to choose stereo, mono or Separate Audio Program (SAP broadcast).

⓯ **AUTO PROG.**
Press to automatically store selected TV/Cable channels.

⓰ **ADD/DEL**
Use to store and delete channels to/from memory.

⓱ **SET**
Sets the remote to control your TV, VCR, Cable, DVD, or Set-Top Box

⓲ **TV, DVD, STB, CABLE, VCR**
Press to operate your TV, DVD, STB, CABLE (box), or VCR

⓳ **SOURCE**
Press to display all of the available video sources.

⓴ **PRE-CH**
Tunes to the previous channel.

㉑ **FAV.CH**
Press to switch to your favorite channels.

㉒ **E.SAVING**
Adjust screen brightness to surrounding environment.

㉓ **CH ⊙ / CH ⊙**
Press to change channels.

㉔ **EXIT**
Press to exit the menu.

㉕ **UP ▲ / DOWN ▼ / LEFT ◀ / RIGHT ▶ / ENTER ↵**
Use to select on-screen menu items and change menu values.

㉖ **INFO**
Use to see information on the current broadcast.

㉗ **SLEEP**
Press to select a preset time interval for automatic shut off.

㉘ **STILL**
Press to stop the action during a particular scene.
Press again to resume normal video.

㉙ **P.SIZE**
Picture size selection.

㉚ **SWAP**
Switches the main and sub picture.

㉛ **CH**
Displays the available channels in sequence. (These buttons change channels in the PIP window only.)

㉜ **CAPTION**
Controls the caption decoder.

㉝ **RESET**
When your remote does not work, change the batteries and press the RESET button for 2-3 seconds before use.

➢ This is a special remote control for the visually impaired, and has Braille points on the Power, Channel and Volume buttons.

Memo

11 Disassembly and Reassembly

This section of the service manual describes the disassembly and reassembly procedures for the TFT-LCD TV.

⚠ **WARNING : This monitor contains electrostatically sensitive devices. Use caution when handling these components.**

11-1 Disassembly

⚠ **Cautions : 1. Disconnect the monitor from the power source before disassembly.**

2. Follow these directions carefully; never use metal instruments to pry apart the cabinet.

Description	Description Picture
1. Place monitor face down on cushioned table. Remove screws from the rear cover. Remove screws from the stand.	 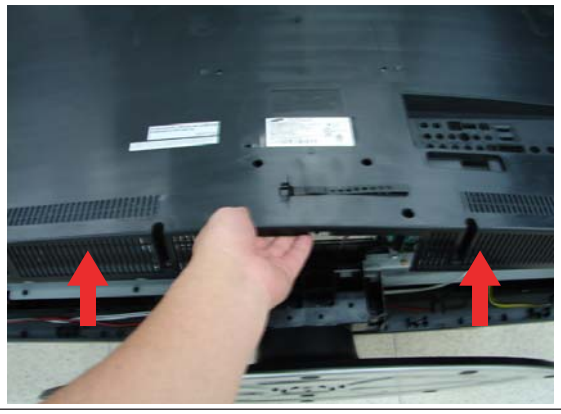 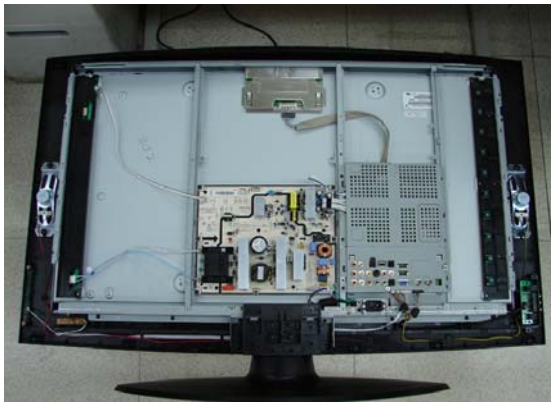

Description	Description Picture
2. Remove Screws from the stand and remove the stand.	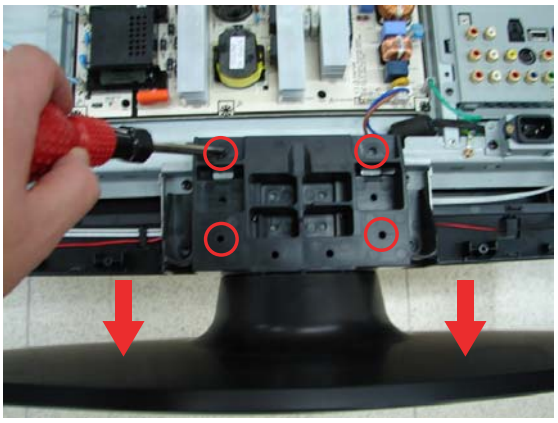
3. Remove 6 screws from the main board cover. Remove 2 screws from the cover-jack.	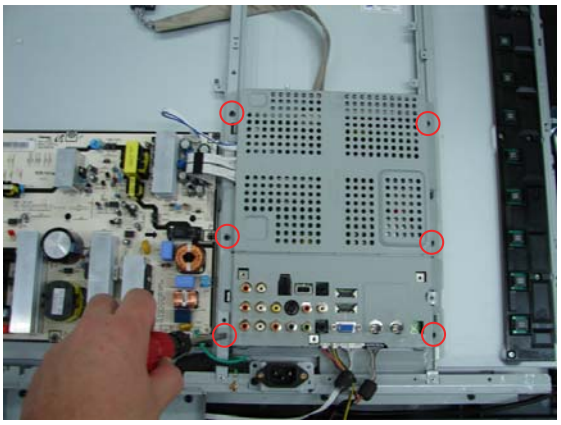

Description	Description Picture
4. Disconnect cables from the power board. Lift up the main board cover.	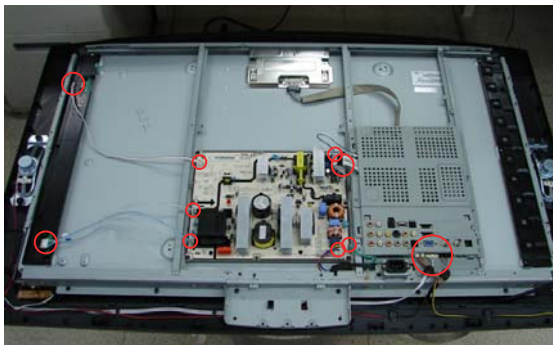
	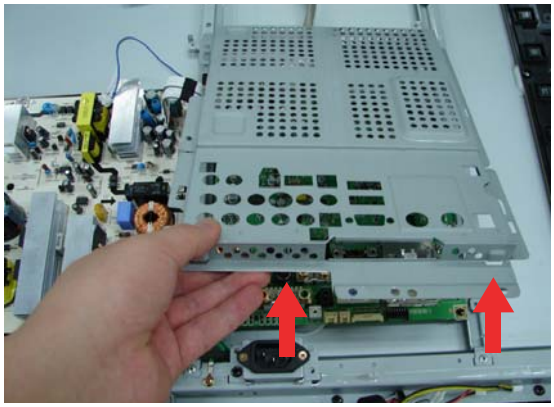
5. Disconnect cables and remove the screws from the Main board.	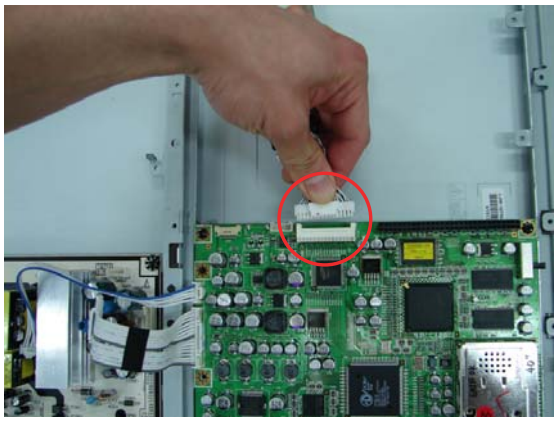
	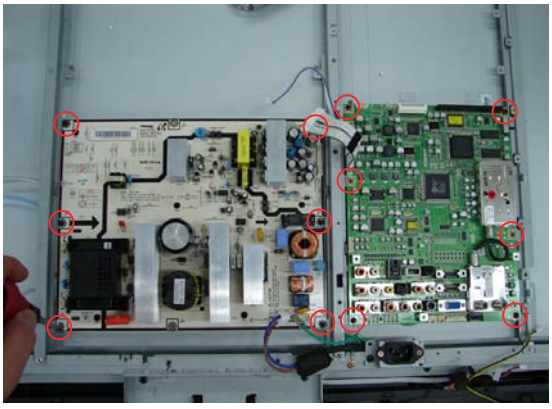

Description	Description Picture
6. Remove Screws from the stand BRKT and lift up the stand BRKT.	
7. Remove screws and Lift up the Lcd panel.	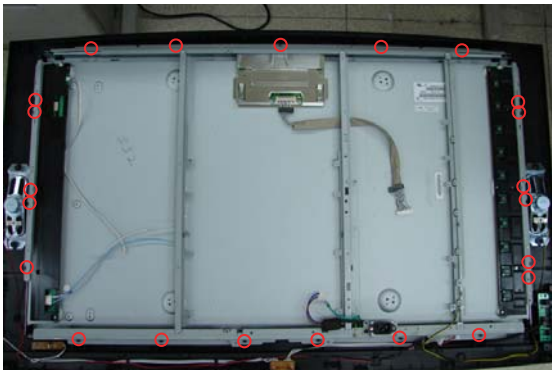
	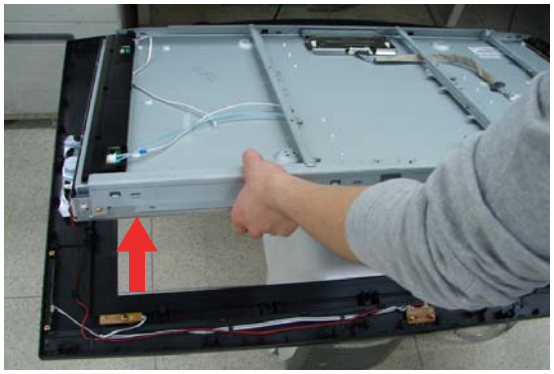

Description	Description Picture
8. Remove 5 secews from the BRKT. Lift up the BRKT.	

11-2 Reassembly

Reassembly procedures are in the reverse order of disassembly procedures.

Memo

12 PCB Diagram

12-1 Main PCB Diagram

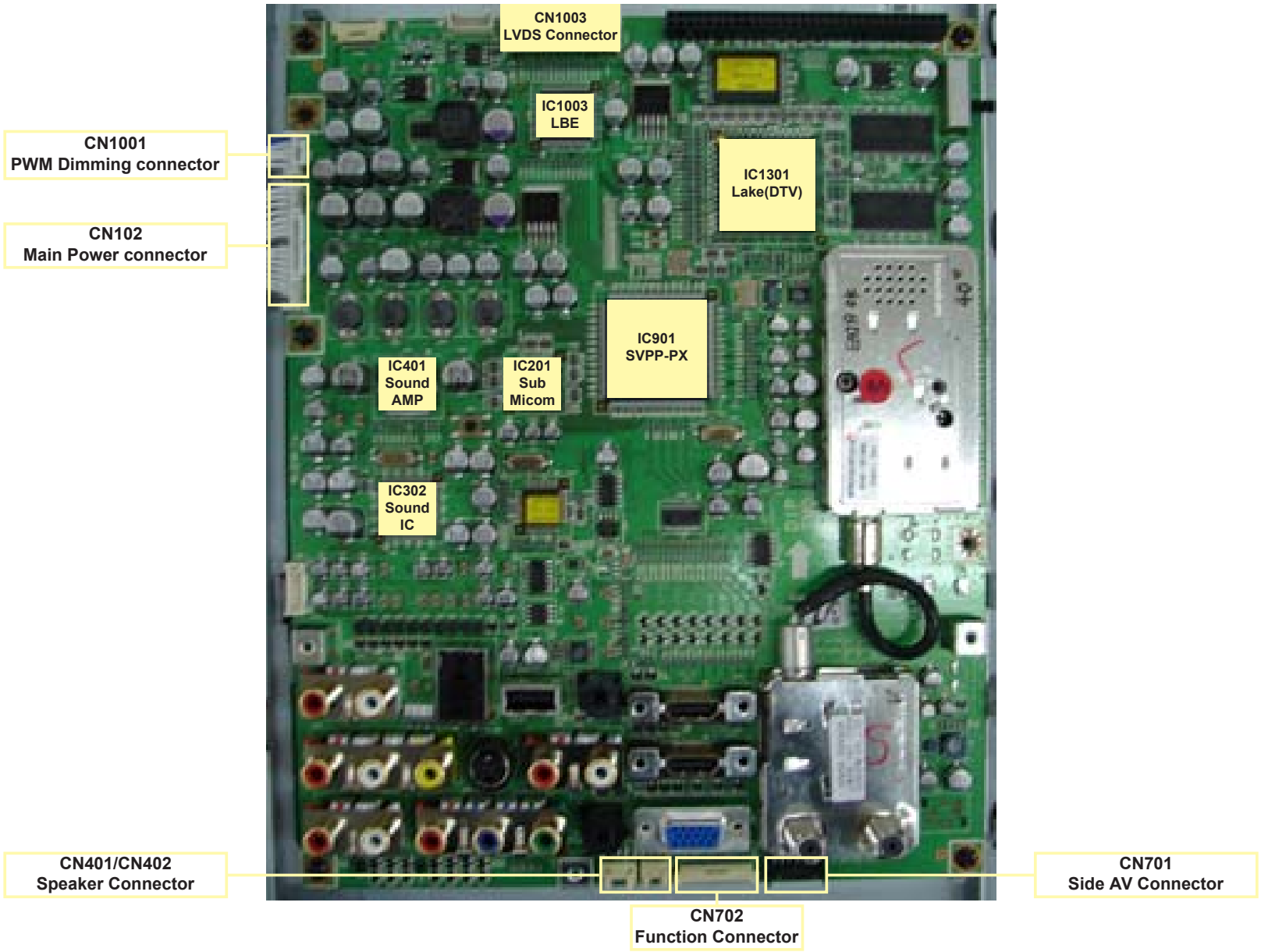

12-2 Power Inverter

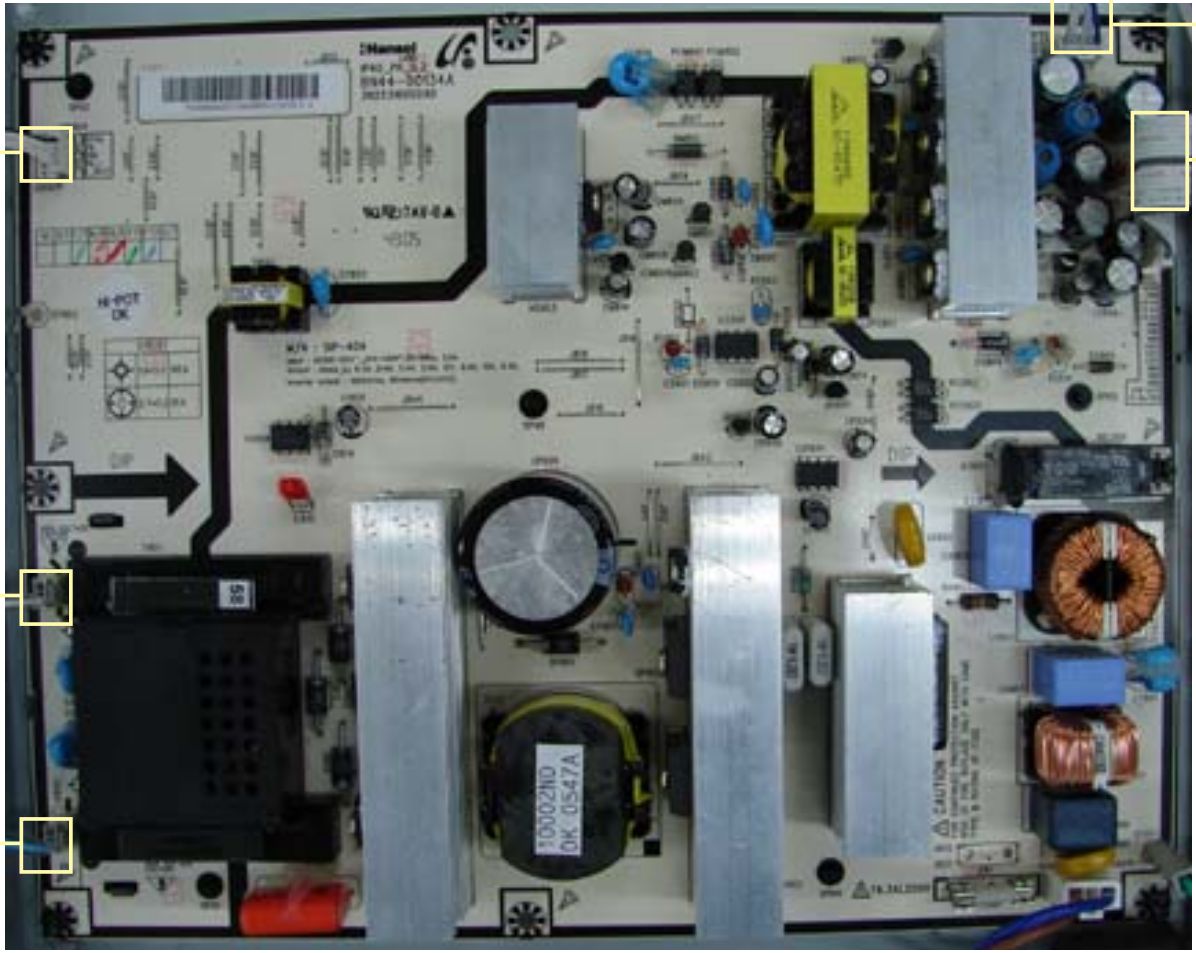

13 Circuit Descriptions

13-1 Block description

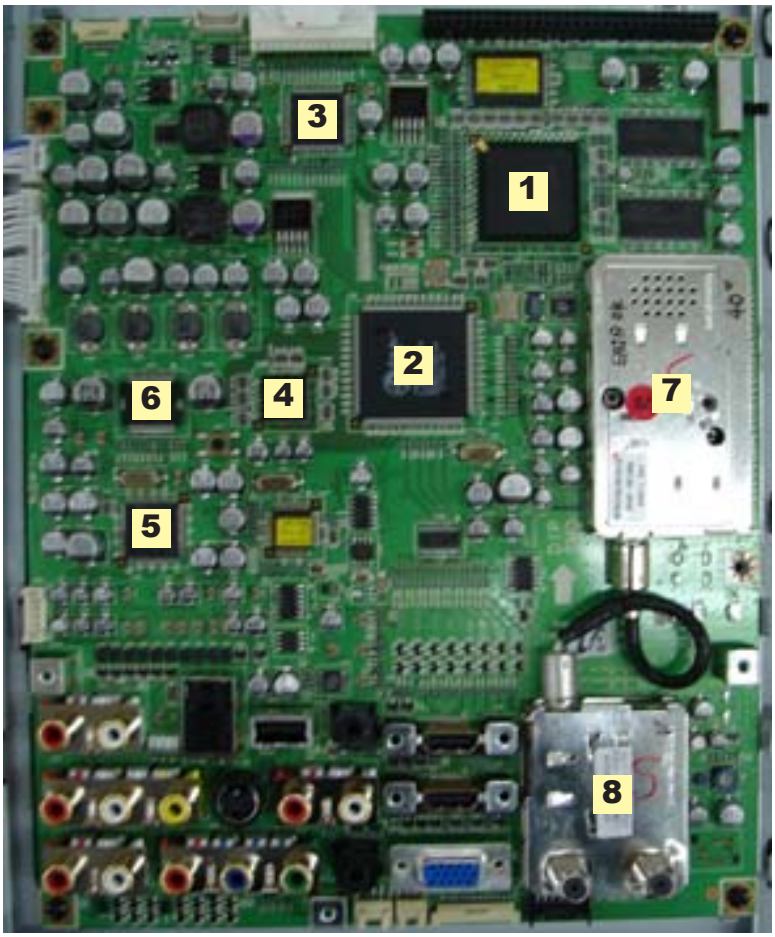

NO	Block	Description	Remark
1	LAKE (IC1301)	DTV Decoder + ARM-9 CPU	S5H2111
2	SVP-PX (IC901)	Video Decoder + Scaler	SVP PX56
3	LBE (IC1003)	Image Backend Enhancer	DNIe SDP54
4	Sub Micom (IC201)	Control Power, PANEL, etc.	3F866B
5	Sound IC (IC302)	Sound Main Processor IC	STV8258
6	Sound AMP (IC401)	Sound AMP IC	STA323
7	TUNER (TU501)	DTV NIM TUNER	DNVS303HH261A
8	RF SPLITTER (CN501)	CABLE / AIR INPUT SELECTOR	BN59-00498A

Memo

14 Reference Infomation

14-1 Technical Terms

- TFT-LCD
(Thin film Transistor Liquid Crystal Display)
ADC(Analog to Digital Converter)
This is a circuit that converts from analog signal to digital signals.

- PLL(Phase Locked Loop)
During progressing ADC, Device makes clock synchronizing HSYNC with Video clock

- Inverter
Device that supply Power to LCD panel lamp. This device gernerate about 1,500~2,000V.

- AC Adapter
Device that converts AC(90V~240V) to DC(+12V or 14V)

- SMPS(Switching Mode Power Supply)
Switching Mode Power supply. This design technology is used to step up/down the input power by switching on/off

- FRC(Frame Rate Controller)
Technology that change image frame quantity displayed on screen for one second.
Actually TFT-LCD panel require 60 pcs of frame for one second.
So,this technology is needed to c onvert input image to 60 pcs regardless input frame quantity.

- Image Scaler
Technology that convert various input resolution to other resolution.(ex. 640* 480 to 1024*768)

- Auto Configuration(Auto adjustment)
This is an algorithm to adjust monitor to optimum condition by pushing one key.

- OSD(On Screen Display)
On screen display. Customer can control the screen easily with this.

- Image Lock
This means "Fineness adjustment " in LCD Monitor, the features are "Fine" and "Coarse"

- FINE
"Fine" adjustment is used to adjust visibility by control phase difference.

- COARSE
This is a adjustment by tuning with Video colck and PLL clock.

- DVI (Digital Visual Interface)
This provides a high speed digital connection for visual data types that is display technology independent. This interface is primarily forcused at providing a connection between a computer and its display device.

- L.V.D.S.(Low Voltage Differential Signaling)
A kind of transmission method for Digital.It can be used from Main PBA to Panel.

- T.M.D.S
(Transition minimized Differential Signaling)
A kind of transmission method for Digital.
It can be used from Video card to Main PBA.

- DDC(Display data channel)
It is a communication method between Host Computer and related equipment.
It can make it Plug and Play between PC and Monitor.

- EDID
Extended Display Identification Data PC can recognize the monitor information as Product data, Product name,Display mode,Serial number and Signal source,etc through DDC Line communicating with PC and Monitor.

- Dot Pitch
The image on a monitor is composed of red, green and blue dots. The closer the dots, the higher the resolution. The distance between two dots of the same color is called the 'Dot Pitch'. Unit: mm

- Vertical Frequency
The screen must be redrawn several times per second in order to create and display an image for the user. The frequency of this repetition per second is called Vertical Frequency or Refresh Rate. Unit: Hz
Example: If the same light repeats itself 60 times per second, this is regarded as 60 Hz.

- Horizontal Frequency
The time to scan one line connecting the right edge to the left edge of the screen horizontally is called Horizontal Cycle. The inverse number of the Horizontal Cycle is called Horizontal Frequency. Unit: kHz

- Interlace and Non-Interlace Methods
Showing the horizontal lines of the screen from the top to the bottom in order is called the Non-Interlace method while showing odd lines and then even lines in turn is called the Interlace method. The Non-Interlace method is used for the majority of monitors to ensure a clear image. The Interlace method is the same as that used in TVs.

- **Plug & Play**
This is a function that provides the best quality screen for the user by allowing the computer and the monitor to exchange information automatically. This monitor follows the international standard VESA DDC for the Plug & Play function.

- Resolution
The number of horizontal and vertical dots used to compose the screen image is called 'resolution'. This number shows the accuracy of the display. High resolution is good for performing multiple tasks as more image information can be shown on the screen.
Example: If the resolution is 1280 x 1024 , this means the screen is composed of 1280 horizontal dots (horizontal resolution) and 1024 vertical lines (vertical resolution).

- BTSC
Broadcast Television System Committee
The stereo broadcasting system that is used in most of the countries that have adopted the NTSC system, including the United States, Canada, Chile, Venezuela and Taiwan. It also refers to the organization that has been organized to promote its development and management.

- EIAJ
Electronic Industries Association of Japan.

- RF Cable
A round signal cable generally used for TV antennas.

- Satellite Broadcasting
Broadcasting service provided via satellite. Enables high picture quality and clear sound throughout the country regardless of the location of the viewer.

- Sound Balance

Balances the levels of the sound coming from each speaker in televisions with two speakers.

- Cable TV

Whereas the terrestrial broadcasting is delivered via frequency signals through the air, cable broadcasting is transmitted via a cable network. In order to view cable TV, one must purchase a cable receiver and hook it up to the cable network.

- CATV

"CATV" refers to the broadcasting service offered at hotels, schools and other buildings through their own broadcasting system, apart from VHF or UHF broadcasting by terrestrial broadcasters. The CATV programs may include movies, entertainment and educational programs. (Different from cable TV.)

CATV can be viewed only within the area in which the CATV service is offered.

- S-Video

Short for "Super Video." S-Video allows up to 800 lines of horizontal resolution, enabling high-quality video.

- VHF/UHF

VHF indicates TV channels 2 to 13, and UHF indicates channels 14 through 69.

- Channel Fine Tuning

This feature allows the viewer to fine-tune the TV channel to obtain the best viewing conditions. The Samsung LCD TV has both automatic and manual channel fine-tuning features to enable the viewer to adjust their desired settings.

- External Device Input

External device input refers to video input from such external video devices as VCRs, camcorders and DVD players, separate from a TV broadcast.

14-2 Pin Assignments

14-2-1 DVI-D

Sync Type / Pin No.	24P DVI-D		
1	Rx2-	13	NC
2	Rx2+	14	DDC Input power (+5V)
3	GND	15	IDENT-DVI
4	NC	16	Output Signal (HDCP Control)
5	NC	17	Rx0-
6	DDC - SCL	18	Rx0+
7	DDC - SDA	19	GND
8	NC	20	NC
9	Rx1-	21	NC
10	Rx1+	22	GND
11	GND	23	RxC+
12	NC	24	RxC-

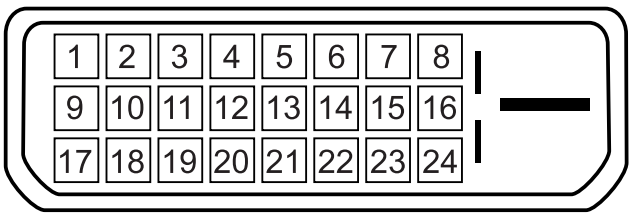

Figure 1.

14-2-2 Component 1, 2

RCA Green	Y
	GND
RCA Blue	Pb (Cb)
	GND
RCA Red	Pr (Cr)
	GND
RCA White	Audio L
	GND
RCA Red	Audio R
	GND

14-2-3 S-Video

Pin	Separate
1	GND
2	Y
3	C
4	GND
5	GND

14-2-4 A/V 1,2

RCA Yellow	CVBS
RCA White	Audio L
	GND
RCA Red	Audio R
	GND

14-2-5 D-SUB

Pin	Separate
1	Red
2	Green
3	Blue
4	GND
5	GND
6	GND Red
7	GND Green
8	GND Blue
9	DDC Input power(+5V)
10	IDENT PC
11	GND
12	DDC Data(SDA)
13	H SYNC
14	V SYNC
15	DDC Clock(SCL)

14-2-6 PC Display mode

Both screen position and size will vary depending on the type of PC monitor and its resolution.

The resolutions in the table are recommended. (All resolutions between the supported limits are supported)

Mode	Resolution	Horizontal Frequency (kHz)	Vertical Frequency (Hz)	Pixel Clock Frequency (MHz)	Sync Polarity (H/V)
IBM	640 x 480	31.469	59.940	25.175	- / -
	720 x 400	31.469	70.087	28.322	- / +
VESA	640 x 480	37.861	72.809	31.500	- / -
	640 x 480	37.500	75.000	31.500	- / -
	800 x 600	37.879	60.317	40.000	+ /+
	800 x 600	48.077	72.188	50.000	+ /+
	800 x 600	46.875	75.000	49.500	+ /+
	1024 x 768	48.364	60.000	65.000	- / -
	1024 x 768	56.476	70.069	75.000	- / -
	1024 x 768	60.023	75.029	78.750	+ /+
	1360 x 768	47.712	60.015	85.800	+ /+

- The interlace mode is not supported.

- The set might operate abnormally if a non-standard video format is selected.

- DVI dose not support PC function.

14-3 Timing Chart

This section of the service manual describes the timing that the computer industry recognizes as standard for computer-generated video signals.

14-3-1 LCD Panel Mode1 mode

Timing No.	LTA400W2
Originator	VESA
Mode Name	1366/60Hz
Resolution (HxV)	1366x768
HORIZONTAL	
Frequency	47.712kHz
Total time	20.959μs
Activetime	15.906μs
Blank time	5.053μs
Border(L / R)	0.000μs
Data time	15.906μs
Front porch	0.749μs
Sync. width	1.702μs
Back porch	2.994μs
Sync. polarity	Positive
VERTICAL	
Frequency	60.015Hz
Total time	16.662 ms
Active time	16.097ms
Blank time	0.566 ms
Border(T/B)	0.000 ms
Data time	16.097ms
Front porch	0.063 ms
Sync. width	0.105 ms
Back porch	0.377ms
Sync polarity	Positive
Dot Clock	85.500MHz
Sync. Type	Separate
Scan Type*	N/I

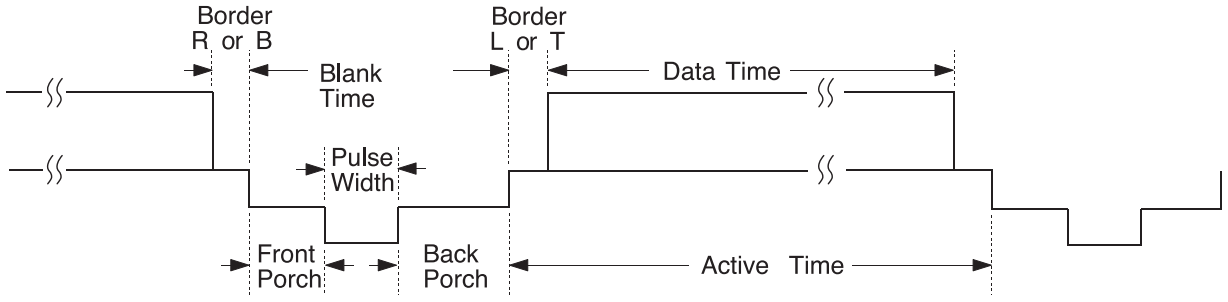

14-3-2 Supported Modes (1)

Timing No.	2	3	11	17	32
Originator	IBM	IBM	VESA	VESA	MAC
Mode Name	VGA2	VGA3	640/72Hz	640/75Hz	640/67Hz
Resolution (HxV)	720x400	640x480	640x480	640x480	640x480
HORIZONTAL					
Frequency	31.469kHz	31.469kHz	37.861kHz	37.500kHz	35.000kHz
Total time	31.777μs	31.778μs	26.413μs	26.667μs	28.571μs
Activetime	26.058μs	26.058μs	20.825μs	20.317μs	21.164μs
Blank time	5.720μs	5.720μs	5.588μs	6.350μs	7.407μs
Border(L / R)	0.318μs	0.318μs	0.254μs	0.000μs	0.000μs
Data time	25.422μs	25.422μs	20.317μs	20.317μs	21.164μs
Front porch	0.318μs	0.318μs	0.508μs	0.508μs	2.116μs
Sync. width	3.813μs	3.813μs	1.270μs	2.032μs	2.116μs
Back porch	1.589μs	1.589μs	3.810μs	3.810μs	3.175μs
Sync. polarity	Negative	Negative	Negative	Negative	Negative
VERTICAL					
Frequency	70.087Hz	59.940Hz	72.809Hz	75.000Hz	66.667Hz
Total time	14.268ms	16.683ms	13.735ms	13.333ms	15.000ms
Active time	13.155ms	15.761ms	13.100ms	12.800ms	13.714ms
Blank time	1.113ms	0.922ms	0.635ms	0.533ms	1.286ms
Border(T/B)	0.222ms	0.254ms	0.211ms	0.000ms	0.000ms
Data time	12.711ms	15.253ms	12.678ms	12.800ms	13.714ms
Front porch	0.191ms	0.064ms	0.026ms	0.027ms	0.086ms
Sync. width	0.064ms	0.064ms	0.079ms	0.080ms	0.086ms
Back porch	0.858ms	0.794ms	0.528ms	0.427ms	1.114ms
Sync polarity	Positive	Negative	Negative	Negative	Negative
Dot Clock	28.322MHz	25.175MHz	31.500MHz	31.500MHz	30.240MHz
Sync. Type	Separate	Separate	Separate	Separate	Separate
Scan Type*	N/I	N/I	N/I	N/I	N/I

14-3-3 Supported Modes (2)

Timing No.	13	14	18
Originator	VESA	VESA	VESA
Mode Name	800/60Hz	800/72Hz	800/75Hz
Resolution (HxV)	800x600	800x600	800x600
HORIZONTAL			
Frequency	37.879kHz	48.077kHz	46.875kHz
Total time	26.400μs	20.800μs	21.333 μs
Activetime	20.000μs	16.000μs	16.162 μs
Blank time	6.400 μs	4.800 μs	5.171 μs
Border(L / R)	0.000 μs	0.000 μs	0.000 μs
Data time	20.000μs	16.000μs	16.162 μs
Front porch	1.000 μs	1.120 μs	0.323 μs
Sync. width	3.200 μs	2.400 μs	1.616 μs
Back porch	2.200 μs	1.280 μs	3.232 μs
Sync. polarity	Positive	Positive	Positive
VERTICAL			
Frequency	60.317Hz	72.188Hz	75.000Hz
Total time	16.579ms	13.853ms	13.333ms
Active time	15.840ms	12.480ms	12.800ms
Blank time	0.739ms	1.373ms	0.533ms
Border(T/B)	0.000ms	0.000ms	0.000ms
Data time	15.840ms	12.480ms	12.800ms
Front porch	0.026ms	0.770ms	0.021ms
Sync. width	0.106ms	0.125ms	0.064ms
Back porch	0.607ms	0.478ms	0.448ms
Sync polarity	Positive	Positive	Positive
Dot Clock	40.000MHz	50.000MHz	49.500MHz
Sync. Type	Separate	Separate	Separate
Scan Type*	N/I	N/I	N/I

14-3-4 Supported Modes (3)

Timing No.	15	16	19	
Originator	VESA	VESA	VESA	VESA
Mode Name	1024/60Hz	1024/70Hz	1024/75Hz	1360/60Hz
Resolution (HxV)	1024x768	1024x768	1024x768	1360x768
HORIZONTAL				
Frequency	48.363kHz	56.476kHz	60.023kHz	47.712kHz
Total time	20.677μs	17.707μs	16.660μs	20.959μs
Activetime	15.754μs	13.653μs	13.003μs	15.906μs
Blank time	4.923μs	4.053 μs	3.777 μs	5.053μs
Border(L / R)	0.000μs	0.000μs	0.000μs	0.000μs
Data time	15.754μs	13.653μs	13.003μs	15.906μs
Front porch	0.369μs	0.320μs	0.323μs	0.749μs
Sync. width	2.092μs	1.813μs	1.219μs	1.702μs
Back porch	2.462μs	1.920μs	2.235μs	2.994μs
Sync. polarity	Negative	Negative	Positive	Positive
VERTICAL				
Frequency	60.004Hz	70.069Hz	75.029Hz	60.015Hz
Total time	16.666ms	14.272ms	13.328ms	16.662 ms
Active time	15.880ms	13.599ms	12.795ms	16.097ms
Blank time	0.786ms	0.672ms	0.533ms	0.566 ms
Border(T/B)	0.000ms	0.000ms	0.000ms	0.000 ms
Data time	15.880ms	13.599ms	12.795ms	16.097ms
Front porch	0.062ms	0.053ms	0.017ms	0.063 ms
Sync. width	0.124ms	0.106ms	0.050ms	0.105 ms
Back porch	0.600ms	0.513ms	0.466ms	0.377ms
Sync polarity	Negative	Negative	Positive	Positive
Dot Clock	65.000MHz	75.000MHz	78.750MHz	85.500MHz
Sync. Type	Separate	Separate	Separate	Separate
Scan Type*	N/I	N/I	N/I	N/I

14-4 Panel Description

Maker	VENDOR P/N	PANEL_CODE	PANEL_ABB	STICKER_CODE	Remarks
SEC	LT140X1-002	BN07-00004A	SA	BN68-00239H	-
SEC	LT150XS-L01	BN07-00009A	SB		-
SEC	LT150XS-L01-B	BN07-00022A	SC		-
SEC	LTM150XS-L02	BN07-00005A	SD		-
SEC	LT181E2-132	BN07-00001A	SE		-
SEC	LT150XS-T01	BN07-00010A	SF		-
SEC	LTM181E3-132	BN07-00019A	SG		-
SEC	LT170E2-131	BN07-10001D	SH		-
SEC	LT181E2-131	BN07-10001E	SJ		-
SEC	LTM170E4-L01	BN07-00018A	SK		-
SEC	LTM240W1-L01	BN07-00015A	SL		-
SEC	LTM213U3-L01	BN07-00016A	SM		-
SEC	LTM150XH-L01	BN07-00026A	SN		
SEC	LTM150XH-L03	BN07-00027A	SP		-
SEC	LTM150XS-L01	BN07-00032A	SQ		DELL(ZPD)
SEC	LTM181E4-L01	BN07-00034A	SR		PVA
SEC	LTM170EH-L01	BN07-00036A	SS		TN
SEC	LTM170E5-L01	BN07-00037A	SU		PVA
SEC	LTM150XH-L11	BN07-00041A	SV		-
SEC	LTM213U4-L01	BN07-00039A	SW		PVA
SEC	LTM150XH-L01(ZPD)	BN07-00045A	SX		ZPD
SEC	LTM150XH-L04	BN07-00046A	SY		New panel with high brightness
SEC	LTM170W1-L01	BN07-00047A	SZ		Panel for TV
SEC	LTM150XH-L06	BN07-00053A	EA		Panel for TV/ High luminance for 450cd _ SONY&EOS Team Panel for TV
SEC	LTM153W1-L01	BN07-00054A	EB		Use NIKE MODEL
SEC	LTM170EH-L05	BN07-00055A	EC		Panel EOS proj. for high brightness of 17" EH-L05
SEC	LTM170E5-L03	BN07-00056A	ED		Dell 1702FP pro. E4. EH mechanical Compatible
SEC	LTM190E1-L01	BN07-00057A	EE		DELL 1900 FP
SEC	LTM181E5-L01	BN07-00061A	EF		18" narrow bezel GH18PS
SEC	LTM150XP-L01	BN07-00065A	EG		AMLCD PVA PANEL
SEC	LTM240W1-L02	BN07-00062A	EH		Panel for 15" Wide TV
SEC	LTM170EU-L01	BN07-00071A	EJ		Slim design, TN
SEC	LTM170E5-L04	BN07-00072A	EK		E5-L04 6 bits FRC... for IBM
SEC	LTA220W1-L01	BN07-00074A	EL		Panel for 22" TV
SEC	LTM170E6-L02	BN07-00075A	EM		AMLCD Narrow & slim design 17" PVA mode
SEC	LTM170W1-L01	BN07-00082A	EN		LTM170W1-L01 ZPD panel
SEC	LTM170EH-L01	BN07-00080A	EP		LTM170EH-L01 ZPD panel
SEC	LTM170E5-L01	BN07-00081A	EQ		LTM170E5-L01 ZPD panel
SEC	LTM170EH-L05	BN07-00083A	ER		LTM170EH-L05 ZPD panel
SEC	LTM170E5-L03	BN07-00084A	ES		LTM170E5-L03 ZPD panel
SEC	LTM170EU-L01	BN07-00085A	ET		LTM170EU-L01 ZPD panel
SEC	LTM170E5-L04	BN07-00086A	EU		LTM170E5-L04 ZPD panel
SEC	LTM170E6-L02	BN07-00087A	EV		LTM170E6-L02 ZPD panel
SEC	LTM150XH-L06	BN07-00091A	EW		Color coordinates change for LCD TV
SEC	LTM153W1-L01	BN07-00092A	EX		AMLCD WIDE 15",9/10
SEC	LTM170W1-L01	BN07-00100A	EY		Color Coordinates change code management
SEC	LTM170EH-L05	BN07-00097A	EZ		LTM170E5-L05 Color Coordinates Change Panel Code

Maker	VENDOR P/N	PANEL_CODE	PANEL_ABB	STICKER_CODE	Remarks
SEC	LTA400W1-L01	BN07-00109A	S1		PANEL of AMLCD 40" TV
SEC	LTM153W1-L01	BN07-00110A	S2		Color coordinates change 0.280/0.290, 10000k & ZPD Panel
SEC	LTM150XH-L06	BN07-00111A	S3		Color coordinates change 0.280/0.290, 10000k & ZPD Panel
SEC	LTM170W1-L01	BN07-00112A	S4		Color coordinates change 0.280/0.290, 10000k & ZPD Panel
SEC	LTM170EH-L05	BN07-00113A	S5		Color coordinates change 0.280/0.290, 10000k & ZPD Panel
SEC	LTM220W1-L01	BN07-00114A	S6		ZPD Panel for AMLCD 22" TV
SEC	LTM150XH-L06	BN07-00117A	S7		ZPD Panel code
SEC	LTM153W1-L01	BN07-00118A	S8		ZPD Panel code
SEC	LTM170WP-L01	BN07-00119A	S9		PVA Panel for NIKE
SEC	LTM213U4-L01	BN07-00039A	E1		21.3" NARROW
SEC LTA260W1-L01		BN07-00121A	E2		VENUS
SEC	LTA220W1-L01	BN07-00074B	E3		"Panel B-level panel code for 22"" TV Panel "
SEC	LTA320W1-L01	BN07-00108A	E4		"Panel for AMLCD 32"" TV"
SEC	LTM213U4-L01	BN07-00124A	E5		NARROW BEZEL 21 " PANEL
SEC	LTM170E6-L04	BN07-00129A	E6		"HIGHLAND 17"" LOW PANEL (Panel only for TCO03)"
SEC	LTM190E1-L01	BN07-00088A	E7		LTM190E1-L01 ZPD panel
SEC	M150X4-L06	BN07-00137A	E8		15" Narrow & Slim panel
SEC	LTA170V1	BN07-00139A	E9		"17"" Panel for Muse 4:3 VGA TV"
SEC	LTM190E1-L02	BN07-00128A	E10		"New Panel from AMLCDl, Specification : 6bit Driver IC"
SEC	LTM170EX-L01	BN07-00143A	E11		"Development new Panel from AMLCD"
SEC	LTM170E8-L01	BN07-00144A	E12		"Development new Panel from AMLCD"
SEC	LTM170E6-L04	BN07-00129B	E13		"ZPD panel for AMLCD (Panel only for TCO03)"
SEC	LTA320W1-L02	BN07-00108B	E14		"Creat B-level Panel code for AMLCD 32"" TV"
SEC	LTM190E1-L03	BN07-00151A	E15		"Development new 19"" Panel form AMLCD (Panel only for TCO03)"
SEC	LTM240W1-L03	BN07-00134A	E16		"AMLCD 24"" panel development"
SEC	LTM190E1-L02	BN07-00128B	E17		"New Panel from AMLCD, Specification : 6bit Driver IC(ZPD)"
SEC	LTM190E4-L01	BN07-00145A	E18		"AMLCD 24"" new panel development"
SEC	LTM170E8-L01	BN07-00158A	E19		"ZPD code derivation"
SEC	LTM170EX-L01	BN07-00159A	E20		"ZPD code derivation"
SEC	LTM190E1-L03	BN07-00151B	E21		"Creat new panel code for AMLCD 19"" (Panel only for TCO03)"
SEC	LTA460H1-L01	BN07-00157A	E22		"creat panel code for AMLCD 46"" TV "
SEC	LTM170EU-L11	BN07-00160A	E23		"creat new panel code for AMLCD 17"" (Panel only for TCO03)"
SEC	LTM240W1-L03	BN07-00134B	E24		"24"" panel ZPD code derivation"
SEC	LTM190E4-L01	BN07-00145B	E25		"AMLCD 19"" ZPD Panel code derivation"
SEC	LTM240W1-L03	BN07-00134B	E26		"24"" panel ZPD code derivation"
SEC	LTM150XO-L01	BN07-00164A	E27		"AMLCD 15"" XO-L01 new panel development"
SEC	LTM150XO-L01	BN07-00164B	E28		"AMLCD 15"" XO-L01 ZPD code derivation"
SEC	LTM170EU-L11	BN07-00160B	E29		"AMLCD 17"" NEW panel code derivation"
SEC	LTA320W2-L01	BN07-00172A	SPZ		AMLCD 32" NEW panel
SEC	LTM213U4-L01	BN07-00124B	SPZ		21.3" Narrow PANEL ZPD Panel derivation
SEC	LTM170EU-L11	BN07-00189A	STH		AMLCD EU-L11 Pb free panel code derivation
SEC	LTM170EU-L11	BN07-00189B	STZ		AMLCD EU-L11 Pb free panel ZPD code derivation
SEC	LTM240W1-L04	BN07-00188A	SPH		24" A-DCC new panel development
SEC	LTM240W1-L04	BN07-00188B	SPZ		24" A-DCC panel ZPD code derivation
SEC	LTM190EX-L01	BN07-00191A	STH		AMLCD 19" TN new Panel
SEC	LTM190EX-L02	BN07-00191B	STZ		AMLCD 19" TN new Panel ZPD derivation
SEC	LTA230W1-L02	BN07-00184A	SPZ		AMLCD 23" 16:9 new Panel

Maker	VENDOR P/N	PANEL_CODE	PANEL_ABB	STICKER_CODE	Remarks
SEC	LTA260W2-L01	BN07-00185A	SPZ		AMLCD 26" 16:9 new Panel
SEC	LTM240M1-L01	BN07-00195A	SPH		24" panel with high brightness deveiopment
SEC	LTA400W2-L01	BN07-00186A	SPZ		AMLCD 40" 16:9 new Panel
SEC	LTM150XO-L01	BN07-00197A	STH		AMLCD 15" XO-L01 Pb free panel code
SEC	LTM150XO-L01	BN07-00197B	STZ		AMLCD 15" XO-L01 Pb free panel ZPD code
SEC	LTM170EU-L21	BN07-00202A	STZ		AMLCD EU-L21 ZPD new code derivation
SEC	LTA460W2-L03	BN07-00187A	SPZ		BEETOVEN 46"ZPD new panel
SEC	LTM240M1-L01	BN07-00195B	SPZ		24" igh brightness panel ZPD code derivation
SEC	M170EX-L21	BN07-00206A	STZ		AMLCD LTM170EX-L21 ZPD new code derivation
SEC	LTA460H3-L01	BN07-00200A	SPZ		AMLCD 46" LED BLU panel
SEC	LTM170EU-L15	BN07-00214A	STZ		AMLCD EU-L15 TV high brightness ZPD new code derivation
SEC	LTM170E8-L21	BN07-00218A	SPZ		AMLCD LTM170E8-L21 PVA ZPD new code derivation
SEC	LTM190EX-L21	BN07-00222A	STZ		DISPLAY LCD
SEC	LTM201U1-L01	BN07-00190B	SPZ		AMLCD 20.1" Normal panel ZPD code derivation
SEC	LTM190E4-L21	BN07-00223A	SPZ		HAYDN 17" PZD code PANEL derivation
SEC	LTA570H1-L01	BN07-00196A	SPZ		AMLCD 57" new panel development
SEC	LTM150XO-L21	BN07-00229A	STZ		AMLCD 15" XO-L21 8ms panel code
SEC	LTA260W2-L11	BN07-00239A	SPZ		AMLCD 26" 16:9 7Line new Panel
SEC	LTA400WS-LH1	BN07-00245A	SPZ		AMLCD 40" 16:9 SPVA 90% new Panel
SEC	LTM213U6-L01	BN07-00231A	SPZ		AMLCD 21.3" PVA new Panel Code
SEC	LTA320WS-LH2	BN07-00244A	SPZ		AMLCD 32" 16:9 SPVA 90% new Panel
SEC	LTA400WS-LH1	BN07-00245A	SPZ		AMLCD 40" 16:9 SPVA 90% new Panel
CPT	CLAA150XG09	BN07-00141A	PA		"CPT 15"" Monitor new panel development"
CPT	CLAA170EA02	BN07-00148A	PB		"17"" CPT NEW development panel"
CPT	CLAA170EA02	BN07-00148B	PC		"17"" CPT ZPD panel code derivation"
CPT	CLAA150XG09	BN07-00141B	PTZ		"CPT 15"" panel ZPD code derivation (GOYA-PJT)"
CPT	CLAA150XP01	BN07-00173A	PTH		CPT 15" PSWG code derivation
CPT	CLAA150XP01	BN07-00173B	PTZ		CPT 15" PSWG panel ZPD code
CPT	CLAA170EA07	BN07-00174A	PTH		"CPT 17"" PSWG panel code derivation
CPT	CLAA170EA07	BN07-00174B	PTZ		CPT 17""" PSWG type new Panel code"""
CPT	CLAA170EA07	BN07-00174B	PTZ		CPT 17" PSWG type new Panel code
CPT	CLAA170EA07Q	BN07-00220A	PTZ		CPT 17" PSWG R/T 8msec code derivation
CPT	CLAA170EA07Q	BN07-00220B	PTH		CPT 17" PSWG R/T 8msec HPD code derivation
CPT	CLAA150XP01F	BN07-00236A	PTZ		CPT 15" PSWG panel ZPD & Lead free code derivation
TOSHIBA	LTM15C419(A)	BN07-00002A	TA		-
TOSHIBA	LTM15C423(B)	BN07-00006A	TB		-
TOSHIBA	LTM18C161	BN07-00008A	TC		-
TOSHIBA	LTM15C443	BN07-00031A	TD		-
TOSHIBA	LTM15C458	BN07-00043A	TE		-
TOSHIBA	LTM15C458S	BN07-00077A	TF		"TSB 15"" high brightness Panel"
TOSHIBA	LTM15C458	BN07-00078A	TG		Toshiba ZPD panel
TOSHIBA	LTM15C458S	BN07-00099A	TH		TSB LTM15C458S (ZPD)
HANNSTAR	HSD150MX41A(A)	BN07-00020A	NA		"TTL type"
HANNSTAR	HSD150MX12	BN07-00030A	NB		"TTL type"
HANNSTAR	HSD170ME13	BN07-00180A	NTH		Hannstar 17" TN new panel development
HANNSTAR	HSD170ME13	BN07-00180B	NTZ		Hannstar 17" TN new panel development ZPD code derivation
HANNSTAR	HSD190ME12	BN07-00210A	NTZ		Hannstar 19" TN new panel development

Maker	VENDOR P/N	PANEL_CODE	PANEL_ABB	STICKER_CODE	Remarks
HANNSTAR	HSD150MX17-A	BN07-00226A	NTZ		Hannstar 15" slim panel ZPD code derivation
TORISAN	TM150XG-22L03(A)	BN07-00021A	RA		-
TORISAN	TM150XG-26L06	BN07-00042A	RB		-
TORISAN	TM181SX-76N01	BN07-00048A	RC		-
TORISAN	TM150XG-26L06	BN07-00059A	RD		15" XGA TN MODE(ZPD)
TORISAN	TM290WX-71N31	BN07-00063A	RE		"RS24NS (TORISAN 29"" NEW PANEL)"
TORISAN	TM396WX-71N31	BN07-00064A	RF		"RS24NS (TORISAN 40"" NEW PANEL)"
TORISAN	TM150XG-26L09	BN07-00073A	RG		"Panel for 15"" TV"
TORISAN	TM150XG-26L10	BN07-00089A	RH		"L10(change except D/IC) ZPD"
TORISAN	TM150XG-26L10	BN07-00090A	RJ		L10 NORMAL
TORISAN	TM190SX-70N01	BN07-00098A	RK		Torisan 19" Panel
TORISAN	TM181SX-76N01	BN07-00106A	RL		ZPD Panel code
TORISAN	TM190SX-70N01	BN07-00107A	RM		ZPD Panel code
TORISAN	TM290WX-71N31	BN07-00115A	RN		"Color Coordinates change panel for TORISAN 29"" TV"
TORISAN	TM396WX-71N31	BN07-00116A	RP,Q		"Color Coordinates change panel for TORISAN 40"" TV"
TORISAN	TM22OWX-71N31	BN07-00125A	RR		"Development TORISAN 22"" TV PANEL (ZPD)"
TORISAN	TM22OWX-71N31	BN07-00127A	RS		"Development TORISAN 22"" TV PANEL (HPD)"
TORISAN	TM396WX-71N32A	BN07-00150A	RT		120V inverter Exclusive panel
TORISAN	TM190SX-70N02	BN07-00154A	RMH		Torisan 6bit panel code Derivation
TORISAN	TM190SX-70N02	BN07-00154B	RMZ		Torisan 6bit panel code Derivation
TORISAN	TM150XG-A01	BN07-00162A	RTH		Torisan 15" Narrow & Slim panel development
TORISAN	TM150XG-A01	BN07-00162B	RTZ		Torisan 15" N&S panel ZPD code Derivation
SHARP	LQ181E1DG11(A)	BN07-10001C	PA		-
SHARP	LQ150X1LW71	BN07-00067A	PB		SHARP 15" PVA PANEL
SHARP	LQ370T3LZ41	BN07-00216A	FAZ		Rome2
HITACHI	TX38D12VC0CAA(A)	BN07-00003A	HA		-
HITACHI	TX43DVCOCAB	BN07-00060A	HB		17" SXGA PVA MODE
HITACHI	TX43D15VC0CAB	BN07-00101A	HC		ZPD Panel
HITACHI	TX51D11VC0CAB	BN07-00122A	HD		20.1" NARROW
HITACHI	TX54D11VC0CAB	BN07-00123A	HE		21.3" NARROW
HITACHI	TX80D12VC0CAB	BN07-00169A	HIZ		"Development new panel for Hitachi 32"" TV (ZPD)"
HITACHI	TX54D11VC0CAB	BN07-00123B	HIZ		Hitachi 21.3"ZPD panel
IBM	ITSX94S	BN07-00017A	IA		-
UNIPAC	UM170E0	BN07-00028A	UA		Loaded by cisdba
HYUNDAI	HT15X13	BN07-00035A	DA		-
HYUNDAI	HT17E11-200	BN07-00049A	DB		TN MODE
HYUNDAI	HT17E11-300	BN07-00093A	DC		HT17E11-300 ZPD panel
HYUNDAI	HT17E11-400	BN07-00094A	DD		HT17E11-400 normal panel
HYUNDAI	HT17E11-400	BN07-00095A	DE		HT17E11-400 ZPD panel code
HYUNDAI	HT17E12	BN07-00096A	DF		HT17E12 (Narow & slim Design)
HYUNDAI	HT17E12	BN07-00105A	DG		ZPD Panel code
HYUNDAI	HT15X15-D00	BN07-00146A	DH		"Development for Ares 15"" Hydis TV"
HYUNDAI	HT15X15-D01	BN07-00146B	DJ		"Derivation panel HPD for Ares 15"" Hydis TV "
HYUNDAI	HT17E13-100	BN07-00167A	DTH		"PINEHURST-2(IBM) PJT 17"" HYDIS PANEL Derivation"
HYUNDAI	HT17E13-100	BN07-00167B	DTZ		"PINEHURST-2(IBM) Hydis 17"" ZPD code Derivation"
ACER	L170E3	BN07-00044A	AA		TN(ADT)
ACER	M170EN05	BN07-00076A	AB		AU 17" Panel (Narrow & slim design)

Maker	VENDOR P/N	PANEL_CODE	PANEL_ABB	STICKER_CODE	Remarks
ACER	M170EN05	BN07-00102A	AC		ZPD Panel code
ACER	M190EN02	BN07-00170A	AMH		"AU Monitor 19"" new panel development (P19-1S)"
ACER	M190EN02	BN07-00170B	AMZ		"AU 19"" ZPD code derivation (ZPD)"
ACER	M170EN06	BN07-00171A	ATH		"AU Monitor 17"" New panel development "
ACER	T260XW01	BN07-00163A	AMZ		"AU 26"" new panel development (NF26EO)"
ACER	A201SN01	BN07-00177A	ATZ		"AU TV panel 20.1"" TN SVGA new panel development"
ACER	M170EN06	BN07-00171B	ATZ		AU Monitor 17" ZPD code derivation
ACER	T315XW01	BN07-00194A	AMZ		AU 32" new
ACER	M170EG01	BN07-00192A	ATH		AU TN PSWG type new Panel code
ACER	M170EG01	BN07-00192B	ATZ		AU TN PSWG type NEW panel code derivation
ACER	M190EN04	BN07-00203A	ATH		AU Monitor 19" ZPD new Panel code
ACER	T260XW02	BN07-00208A	AMZ		AUO 26" ZPD panel
ACER	M170EG01 V8	BN07-00221A	ATZ		AU TN PSWG type new Panel (8msec) ZPD code derivation
ACER	T260XW02	BN07-00233A	AMZ		AUO 26" Panel new (Cosmetic spec down grade)
ACER	T315XW01	BN07-00234A	AMZ		AUO 32" Grade new (Cosmetic spec down grade)
ACER	M190EN03	BN07-00224A	AMZ		AU Monitor 19" MVA new code derivation
ACER	T315XW01	BN07-00237A	AMZ		LCD TV VE project new
ACER	T315XW01	BN07-00238A	AMZ		LCD TV VE project new
ACER	M201UN02 V3	BN07-00168A	AMZ		
CHIMEI	M170E3-LO1	BN07-00050A	CA		TN PANEL
CHIMEI	M150X3-L01	BN07-00051A	CB		COMPATIBLE
CHIMEI	M170E4-L01	BN07-00052A	CC		MVA PANEL
CHIMEI	M150X2-L01	BN07-00066A	CD		CHIME 15"I PVA PANEL
CHIMEI	M150X3-L01	BN07-00079A	CE		Chimei ZPD panel
CHIMEI	M170E3-L01	BN07-00103A	CF		ZPD Panel code
CHIMEI	M170E4-L01	BN07-00104A	CG		ZPD Panel code
CHIMEI	V296W1-L01	BN07-00120A	CH		MVA
CHIMEI	M170E6-L02	BN07-00126A	CJ		HIGHLAND 17" LOW PANEL
CHIMEI	M190E2-L01	BN07-00131A	CK		GH19AS,BS CHIMEI PANEL
CHIMEI	M150X4-L06	BN07-00137A	CL		15" Narrow & Slim panel
CHIMEI	M170E6-L01	BN07-00133A	CM		"2003-03-11 vendor change"
CHIMEI	M170E6-L01	BN07-00133B	CN		ZPD derivation panel
CHIMEI	V201V1-T01	BN07-00135A	CP		CHIMEI 20.1" panel development
CHIMEI	M170E6-L02	BN07-00126B	CQ		"HIGHLAND 17"" LOW PANEL ZPD derivation panel"
CHIMEI	M170E6-L05	BN07-00152A	CR		"CMO 17"" new panel development code"
CHIMEI	M170E6-L05	BN07-00152B	CS		"CMO 17"" ZPD panel code derivation"
CHIMEI	M150X4-L06	BN07-00137B	CT		Chimei 15" Narrow & Slim panel ZPD derivation
CHIMEI	M170E5-L05	BN07-00165A	CTH		CMO 17" new panel development code (GOYA2-PJT)
CHIMEI	M170E5-L05	BN07-00165B	CTZ		CMO 17" ZPD panel(GOYA2-PJT)
CHIMEI	V230W1-L02	BN07-00209A	CMZ		CMO 23" development
CHIMEI	V320B1-L01	BN07-00207A	CMZ		CMO 32" development
CHIMEI	V270W1-L01	BN07-00136A	CMZ		CHI MEI 27" panel development
NEC	SVA150XG04TB	BN07-00225A	BTZ		SVA NEC 15" panel ZPD code

1 Precautions

Follow these safety, servicing and ESD precautions to prevent damage and to protect against potential hazards such as electrica l shock.

1-1 Safety Precautions

1-1-1 Warnings

1. For continued safety, do not attempt to modify the circuit board.
2. Disconnect the AC power and DC power jack before servicing.

1-1-2 Servicing the LCD Monitor

1. When servicing the LCD Monitor, Disconnect the AC line cord from the AC outlet.
2. It is essential that service technicians have an accurate voltage meter available at all times. Check the calibration of this meter periodically.

1-1-3 Fire and Shock Hazard

Before returning the monitor to the user, perform the following safety checks:

1. Inspect each lead dress to make certain that the leads are not pinched or that hardware is not lodged between the chassis and other metal parts in the monitor.
2. Inspect all protective devices such as nonmetallic control knobs, insulating materials, cabinet backs, adjustment and compartment covers or shields, isolation resistor-capacitor networks, mechanical insulators, etc.
3. Leakage Current Hot Check (Figure 1-1):

   WARNING : Do not use an isolation transformer during this test.

   Use a leakage current tester or a metering system that complies with American National Standards Institute (*ANSI C101.1, Leakage Current for Appliances*), and Underwriters Laboratories (*UL Publication UL1410, 59.7*).

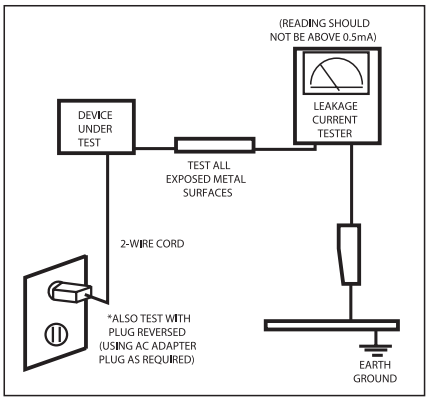

Figure 1-1. Leakage Current Test Circuit

4. With the unit completely reassembled, plug the AC line cord directly into a 120V AC outlet. With the unit's AC switch first in the ON position and then OFF, measure the current between a known earth ground (metal water pipe, conduit, etc.) and all exposed metal parts, including: metal cabinets, screwheads and control shafts. The current measured should not exceed 0.5 milliamp. Reverse the power-plug prongs in the AC outlet and repeat the test.

1-1-4 Product Safety Notices

Some electrical and mechanical parts have special safety-related characteristics which are often not evident from visual inspection. The protection they give may not be obtained by replacing them with components rated for higher voltage, wattage, etc. Parts that have special safety characteristics are identified by ⚠ on schematics and parts lists. A substitute replacement that does not have the same safety characteristics as the recommended replacement part might create shock, fire and/or other hazards. Product safety is under review continuously and new instructions are issued whenever appropriate.

1-2 Servicing Precautions

WARNING: An electrolytic capacitor installed with the wrong polarity might explode.

Caution: Before servicing units covered by this service manual, read and follow the Safety Precautions section of this manual.

Note: If unforeseen circumstances create conflict between the following servicing precautions and any of the safety precautions, always follow the safety precautions.

1-2-1 General Servicing Precautions

1. Always unplug the unit's AC power cord from the AC power source and disconnect the DC Power Jack before attempting to:
   (a) remove or reinstall any component or assembly, (b) disconnect PCB plugs or connectors, (c) connect a test component in parallel with an electrolytic capacitor.
2. Some components are raised above the printed circuit board for safety. An insulation tube or tape is sometimes used. The internal wiring is sometimes clamped to prevent contact with thermally hot components. Reinstall all such elements to their original position.
3. After servicing, always check that the screws, components and wiring have been correctly reinstalled. Make sure that the area around the serviced part has not been damaged.
4. Check the insulation between the blades of the AC plug and accessible conductive parts (examples: metal panels, input terminals and earphone jacks).
5. Insulation Checking Procedure: Disconnect the power cord from the AC source and turn the power switch ON. Connect an insulation resistance meter (500 V) to the blades of the AC plug.

   The insulation resistance between each blade of the AC plug and accessible conductive parts (see above) should be greater than 1 megohm.
6. Always connect a test instrument's ground lead to the instrument chassis ground before connecting the positive lead; always remove the instrument's ground lead last.

1-3 Electrostatically Sensitive Devices (ESD) Precautions

Some semiconductor (solid state) devices can be easily damaged by static electricity. Such components are commonly called Electrostatically Sensitive Devices (ESD). Examples of typical ESD are integrated circuits and some field-effect transistors. T he following techniques will reduce the incidence of component damage caused by static electricity.

1. Immediately before handling any semiconductor components or assemblies, drain the electrostatic charge from your body by touching a known earth ground. Alternatively, wear a discharging wrist-strap device. To avoid a shock hazard, be sure to remove the wrist strap before applying power to the monitor.
2. After removing an ESD-equipped assembly, place it on a conductive surface such as aluminum foil to prevent accumulation of an electrostatic charge.
3. Do not use freon-propelled chemicals. These can generate electrical charges sufficient to damage ESDs.
4. Use only a grounded-tip soldering iron to solder or desolder ESDs.
5. Use only an anti-static solder removal device. Some solder removal devices not classified as "anti-static" can generate electrical charges sufficient to damage ESDs.
6. Do not remove a replacement ESD from its protective package until you are ready to install it. Most replacement ESDs are packaged with leads that are electrically shorted together by conductive foam, aluminum foil or other conductive materials.
7. Immediately before removing the protective material from the leads of a replacement ESD, touch the protective material to the chassis or circuit assembly into which the device will be installed.

   Caution: Be sure no power is applied to the chassis or circuit and observe all other safety precautions.
8. Minimize body motions when handling unpackaged replacement ESDs. Motions such as brushing clothes together, or lifting your foot from a carpeted floor can generate enough static electricity to damage an ESD.

1-4 Installation Precautions

1. For safety reasons, more than two people are required for carrying the product.

2. Keep the power cord away from any heat emitting devices, as a melted covering may cause fire or electric shock.

3. Do not place the product in areas with poor ventilation such as a bookshelf or closet. The increased internal temperature may cause fire.

4. Bend the external antenna cable when connecting it to the product. This is a measure to protect it from being exposed to moisture. Otherwise, it may cause a fire or electric shock.

5. Make sure to turn the power off and unplug the power cord from the outlet before repositioning the product. Also check the antenna cable or the external connectors if they are fully unplugged. Damage to the cord may cause fire or electric shock.

6. Keep the antenna far away from any high-voltage cables and install it firmly. Contact with the highvoltage cable or the antenna falling over may cause fire or electric shock.

7. When installing the product, leave enough space (10cm) between the product and the wall for ventilation purposes.
   A rise in temperature within the product may cause fire.

Memo

2 Product Specifications

2-1 Fashion Feature

- RF, HDMI(DVI-D), PC(Analog), Component, Video, S-Video
- Brightness : 500cd/㎡, CMO : 550cd/㎡
- Contrast Ratio :

  26" : 800:1, 32" : 1000:1, 40" : 800 :1, CMO : 1000 : 1
- Respense time : 16ms
- Dynamic contrast
- PIP (on PC only)

2-2 Specifications

2-2-1 LN-S2641D Specifications

Item	Description	
LCD Panel	TFT-LCD panel, RGB vertical stripe, normaly white, 26-Inch viewable, 0.372 (H) x 0.372(V)mm pixel pitch	
Scanning Frequency	Horizontal : 30 kHz ~ 61 kHz (Automatic) Vertical : 60 Hz ~ 75 Hz (Automatic)	
Display Colors	16.7 Million colors	
Maximum Resolution	Horizontal : 1360 Pixels Vertical : 768 Pixels	
Input Video Signal	Analog 0.7 Vp-p ±5% positive at 75Ω, internally terminated	
Input Sync Signal Level : TTL level	Type : Seperate H/V	
Maximum Pixel Clock rate	80 MHz	
Active Display Horizontal/Vertical	508.125 mm / 285.696 mm	
AC power voltage & Frequency	AC 110V ~120V ,60Hz	
Power Consumption	< 133 W (< 1W, stand by)	
Dimensions(W x D x H) Set	675 X 75 X 475.5mm with out stand 675 X 215.5 X 530 mm with stand	
Weight Set(With stand)	10.1 Kg	
Environmental Considerations	Operating Temperature : 50 ˚F ~ 104 ˚F (10˚C ~ 40˚C) Operating Humidity : 10 % ~ 80 % Storage Temperature : -4 ˚F ~ 113 ˚F (-20˚C ~ 45˚C) Storage Humidity : 5 % ~ 95 %	
TV System	Tunning	Frequency Synthesize
	System	ATSC, NTSC
	Sound	MONO, STEREO, SAP
Antena Input	75Ω	
Sound Characteristic	- MAX Internal speaker Out : Right => 5W, Left => 5W	
	- BASS Control Range : -8 dB ~ + 8dB - TREBLE Control Range : -8 dB ~ +8 dB - Headphone Out : 10 mW MAX - Output Frequency : RF : 80 Hz ~ 15 kHz A/V : 80 Hz ~ 20 kHz	

2-2-2 LN-S3241D Specifications

Item	Description	
LCD Panel	TFT-LCD panel, RGB vertical stripe, normaly white, 32-Inch viewable, 0.1460 (H) x 0.4365(V)mm pixel pitch	
Scanning Frequency	Horizontal : 30 kHz ~ 61 kHz (Automatic) Vertical : 60 Hz ~ 75 Hz (Automatic)	
Display Colors	16.7 Million colors	
Maximum Resolution	Horizontal : 1360 Pixels Vertical : 768 Pixels	
Input Video Signal	Analog 0.7 Vp-p ±5% positive at 75Ω , internally terminated	
Input Sync Signal	Type : Seperate H/V Level : TTL level	
Maximum Pixel Clock rate	80 MHz	
Active Display Horizontal/Vertical	596.259 mm / 335.232 mm	
AC power voltage & Frequency	AC 110V~120V, 60Hz	
Power Consumption	< 150W (< 1W, stand by)	
Dimensions(W x D x H) Set	800 X 80 X 548.5 mm with out stand 800 X252 X 603 mm With stand	
Weight Set(With stand)	14.8 kg	
Environmental Considerations	Operating Temperature : 50 ˚F ~ 104 ˚F (10 ˚C ~ 40 ˚C) Operating Humidity : 10 % ~ 80 % Storage Temperature : -4 ˚F ~ 113 ˚F (-20 ˚C ~ 45 ˚C) Storage Humidity : 5 % ~ 95 %	
TV System	Tunning	Frequency Synthesize
	System	ATSC, NTSC
	Sound	MONO, STEREO, SAP
Antena Input	75Ω	
Sound Characteristic	- MAX Internal speaker Out : Right => 10W, Left => 10W	
	- BASS Control Range : -8 dB ~ + 8dB - TREBLE Control Range : -8 dB ~ +8 dB - Headphone Out : 10 mW MAX - Output Frequency : RF : 80 Hz ~ 15 kHz A/V : 80 Hz ~ 20 kHz	

2-2-3 LN-S4041D Specifications

Item	Description	
LCD Panel	TFT-LCD panel, RGB vertical stripe, normaly white, 40-Inch viewable, 0.511 (H) x 0.511(V)mm pixel pitch	
Scanning Frequency	Horizontal : 30 kHz ~ 61 kHz (Automatic) Vertical : 60 Hz ~ 75 Hz (Automatic)	
Display Colors	16.7 Million colors	
Maximum Resolution	Horizontal : 1360 Pixels Vertical : 768 Pixels	
Input Video Signal	Analog 0.7 Vp-p ±5% positive at 75Ω, internally terminated	
Input Sync Signal	Type : Seperate H/V Level : TTL level	
Maximum Pixel Clock rate	80 MHz	
Active Display Horizontal/Vertical	697.69 mm / 392.26 mm	
AC power voltage & Frequency	AC 110V~120V 60Hz	
Power Consumption	< 218W (< 1W, stand by)	
Dimensions(W x D x H) Set	991.5 X 87 X 658.5 mm with out stand 991.5 X 326 X 713 mm with stand	
Weight Set(With stand)	22.8 Kg	
Environmental Considerations	Operating Temperature : 50 ˚F~ 104 ˚F (10 ˚C ~ 40 ˚C) Operating Humidity : 10 % ~ 80 % Storage Temperature : -4 ˚F ~ 113 ˚F (-20 ˚C ~ 45 ˚C) Storage Humidity : 5 % ~ 95 %	
TV System	Tunning	Frequency Synthesize
	System	ATSC, NTSC
	Sound	MONO, STEREO, SAP
Antena Input	75Ω	
Sound Characteristic	- MAX Internal speaker Out : Right => 10W, Left => 10W	
	- BASS Control Range : -8 dB ~ + 8dB - TREBLE Control Range : -8 dB ~ +8 dB - Headphone Out : 10 mW MAX - Output Frequency : RF : 80 Hz ~ 15 kHz A/V : 80 Hz ~ 20 kHz	

2-2-4 Spec Comparison

Model	LN-R408D	LN-S2641D / LN-S3241D / LN-S4041D
Design		
Frequency Horizontal Vertical Display Color	 30 ~ 61 kHz 60 ~ 75 Hz 16,777,216 colors	 30 ~ 61 kHz 60 ~ 75 Hz 16,777,216 colors
PC Resolution Maximum mode	 1360 x 768 / 60 Hz	 1360 x 768 / 60 Hz
Input Signal Sync Signal Video Signal	 H/V Separate, TTL, P. or N. 0.7 Vp-p @ 75ohm	 H/V Separate, TTL, P. or N. 0.7 Vp-p @ 75ohm
Power Consumption Normal Power Saving	 100W / 140W / 170W < 2W	 133W / 150W / 218W < 1W
Input source Difference	 DVI-D	 HDMI
PIP	PIP(PC Only)	PIP, POP
Sound	3W / 5W / 7.5W	5W / 10W / 10W

2-3 Option Specification

Item	Item Name	Code.No	Remark
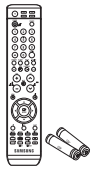	Remote Control & Batteries (AAA x 2)	BN59-00511A	
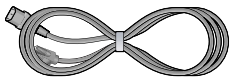	Power Cord	3903-000144	
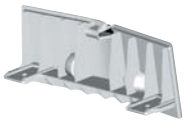	Cover-Bottom	LN-S2641D/LN-S3241D (BN63-02323B) LN-S4041D (BN63-02366B)	
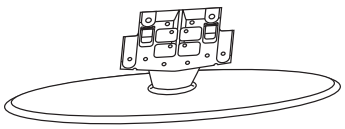	Stand	LN-S2641D (BN96-03017A) LN-S3241D (BN96-02998A)	
	Stand Screw (4 ea)	6002-001294	
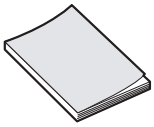	Owner's Instructions	-	
	Cleaning Cloth	BN63-01798A	
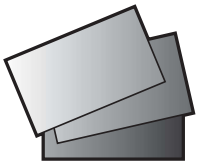	Warranty Card / Registration Card /Safety Guide Manual (Not available in all locations)	-	

3 Alignments and Adjustments

3-1 General Alignment Instuction

1. Usually, a color LCD-TV needs only slight touch-up adjustment upon installation.
   Check the basic characteristics such as height, horizontal and vertical sync.
2. Use the specified test equipment or its equivalent.
3. Correct impedance matching is essential.
4. Avoid overload. Excessive signal from a sweep generator might overload the front-end
   of the TV. When inserting signal markers, do not allow the marker generator to distort test result.
5. Connect the TV only to an AC power source with voltage and frequency as specified on
   the backcover nameplate.
6. Do not attempt to connect or disconnect any wire while the TV is turned on. Make sure
   that the power cord is disconnected before replacing any parts.
7. To protect aganist shock hazard, use an isolation transform.

3-2 Factory Mode Adjustments

3-2-1 Entering Factory Mode

To enter 'Service Mode' Press the remote -control keys in this sequence :

- If you do not have Factory remote - control

Power OFF → MUTE → 1 → 8 → 2 → Power On

3-2-2 How to Access Service Mode

- Using the Customer Remote

1.Turn the power off and set to stand-by mode

2.Press the remote buttons in this order; POWER OFF-MUTE-1-8-2-POWER ON to turn the set on.

3.The set turns on and enters service mode.

4.Press the Power button to exit and store data in memory.

※ If you fail to enter service mode, repeat steps 1 and 2 above.

5.Initial SERVICE MODE DISPLAY State

HDMI/DTV HD	
Calibration	Checksum
Option Byte	KS1406
White Balance	KS1409
W/B Movie	Dynamic Contrast
SVP-PX	EEPROM Access Count
LBE	RESET
SOUND(STV825X)	
Sub Micom Download	
T-BORDNUS0-0064 Dec 27 2005	
T-BORDNUS5-0053 [Sec:47]	

※"T-BORDNUS0-0064 Dec 27 2005" and "T-BORDNUS5-0053" are firmware version.
The firmware version is subject to change without notice.

6.Buttons operations within Service Mode

MENU	Full Menu Display/Move to Parent Menu
Direction keys ▲/▼	Item Selection by Moving the Cursor
Direction keys ◀/▶	Data Increse/Decrese for the Selected Item
Source	Cycles through the active input source that are connected to the unit

3-2-3 Factory Data

AV/S-VIDEO	
Calibration	Checksum
Option Byte	KS1406
White Balance	KS1409
W/B Movie	Dynamic Contrast
SVP-PX	EEPROM Access Count
LBE	RESET
SOUND(STV825X)	
Sub Micom Download	
T-BORDNUS0-0064 Dec 27 2005	
T-BORDNUS5-0053 [Sec:47]	

AV Calibration
Comp Calibration
PC Calibration
Hdmi Calibration

AV/S-VIDEO	
Calibration	Checksum
Option Byte	KS1406
White Balance	KS1409
W/B Movie	Dynamic Contrast
SVP-PX	EEPROM Access Count
LBE	RESET
SOUND(STV825X)	Panel
Sub Micom Download	Mute
	CH Memory
T-BORDNUS0-0064 Dec 27 2005	
T-BORDNUS5-0053 [Sec:47]	

Caption Level	16
Watchdog Enable	1
Spread Spectrum	>>
Panel Option	32AUO
PWM Dimming	Ext
NIM Version	KS1409
SIDE A/V	On
RS-232 JACK	Serial
Gamma	OFF
ACR	OFF
HSCB	BASE

AV/S-VIDEO	
Calibration	Checksum
Option Byte	KS1406
White Balance	KS1409
W/B Movie	Dynamic Contrast
SVP-PX	EEPROM Access Count
LBE	RESET
SOUND(STV825X)	
Sub Micom Download	
T-BORDNUS0-0064 Dec 27 2005	
T-BORDNUS5-0053 [Sec:47]	

Sub Bright(LBE)	128
R-Offset	512
G-Offset	512
B-Offset	512
Sub Contrast(LBE)	128
R-Gain	512
G-Gain	512
B-Gain	512

AV/S-VIDEO	
Calibration	Checksum
Option Byte	KS1406
White Balance	KS1409
W/B Movie	Dynamic Contrast
SVP-PX	EEPROM Access Count
LBE	RESET
SOUND(STV825X)	
Sub Micom Download	
T-BORDNUS0-0064 Dec 27 2005	
T-BORDNUS5-0053 [Sec:47]	

W/B Movie On/Off	Off	NOR_BGain	0
Mode	Dynamic	NOR_ROffset	0
Color Tone	Cool1	NOR_BOffset	0
W1_RGain	0	C2_RGain	0
W1_BGain	0	C2_BGain	0
W1_ROffset	0	C2_ROffset	0
W1_BOffset	0	C2_BOffset	0
W2_RGain	0	Movie Contrast	70
W2_BGain	0	Movie Bright	50
W2_ROffset	0	Movie Color	25
W2_BOffset	0	Movie Sharpness	45
NOR_RGain	0		

AV/S-VIDEO	
Calibration	Checksum
Option Byte	KS1406
White Balance	KS1409
W/B Movie	Dynamic Contrast
SVP-PX	EEPROM Access Count
LBE	RESET
SOUND(STV825X)	
Sub Micom Download	
T-BORDNUS0-0064 Dec 27 2005	
T-BORDNUS5-0053 [Sec:47]	

Sharpness	>>
LNA PLUS	>>
Color Manage	>>
UV Delay	>>
PGA	>>
Calibration Target	>>
CLK_A	16
CLK_B	133

H2gain	16
H4gain	4
V2gain	16
V4gain	4
Sr2gain	2
Sr4gain	0
Sl2gain	2
Sl4gain	0
Peakth1	4
Peakth2	47
Peakth3	63

Sharpness	>>
LNA PLUS	>>
Color Manage	>>
UV Delay	>>
PGA	>>
Calibration Target	>>
CLK_A	16
CLK_B	133

dB0_Peaking_th1	2
dB0_Vpeaking_th1	4
dB1_Peaking_th1	12
dB1_NoiseAmount	20
dB1_Vpeaking_th1	12
dB2_Peaking_th1	32
dB2_NoiseAmount	40
dB2_Vpeaking_th2	32
dB3_Peaking_th1	128
dB3_NoiseAmount	60
dB3_Vpeaking_th1	80

Sharpness	>>
LNA PLUS	>>
Color Manage	>>
UV Delay	>>
PGA	>>
Calibration Target	>>
CLK_A	16
CLK_B	133

DSM_Skin_Direct	Red
DSM_Skin_Enhance	0
DSM_Green_Stretch	0
DSM_Blue_Strech	0
Ss_Skin_Direct	Red
Ss_Skin_Enhance	0
Ss_Green_Stretch	0
Ss_Blue_Stretch	0

Sharpness	>>
LNA PLUS	>>
Color Manage	>>
UV Delay	>>
PGA	>>
Calibration Target	>>
CLK_A	16
CLK_B	133

U Delay	1
V Delay	1

AV/S-VIDEO	
Calibration	Checksum
Option Byte	KS1406
White Balance	KS1409
W/B Movie	Dynamic Contrast
SVP-PX	EEPROM Access Count
LBE	RESET
SOUND(STV825X)	
Sub Micom Download	
T-BORDNUS0-0064 Dec 27 2005	
T-BORDNUS5-0053 [Sec:47]	

Sharpness	>>
LNA PLUS	>>
Color Manage	>>
UV Delay	>>
PGA	>>
Calibration Target	>>
CLK_A	16
CLK_B	133

TCD3_Contrast	128
TCD3_Bright	40
TCD3_YC_Delay	0
ANALOG_Y_Offset	64
ANALOG_PB_Offset	128
ANALOG_PR_Offset	128
ANALOG_Y_Gain	214
ANALOG_PB_Gain	254
ANALOG_PR_Gain	254
BlackLevel	0
Bright40	25
CAGC_Target_NotUse	170
UserColor	127

Sharpness	>>
LNA PLUS	>>
Color Manage	>>
UV Delay	>>
PGA	>>
Calibration Target	>>
CLK_A	15
CLK_B	133

1st_AV_Low	0x17	2nd_AV_Low	0x 0
1st_AV_High	0xE8	2nd_AV_High	0xF5
1st_AV_Delta	0x 4	2nd_AV_Delta	0x10
1st_COMP_Low	0x F	2nd_COMP_Low	0x 0
1st_COMP_High	0xF0	2nd_COMP_High	0xF5
1st_COMP_Delta	0x 4	2nd_COMP_Delta	0x10
1st_PC_Low	0x 4	2nd_PC_Low	0x 0
1st_PC_High	0x 4	2nd_PC_High	0xF5
1st_PC_Delta	0xFF	2nd_PC_Delta	0x10
None	0x 4	2nd_HDMI_Low	0x 0
None		2nd_HDMI_High	0xF5
None		2nd_HDMI_Delta	0x10

AV/S-VIDEO	
Calibration	Checksum
Option Byte	KS1406
White Balance	KS1409
W/B Movie	Dynamic Contrast
SVP-PX	EEPROM Access Count
LBE	RESET
SOUND(STV825X)	
Sub Micom Download	
T-BORDNUS0-0064 Dec 27 2005	
T-BORDNUS5-0053 [Sec:47]	

PATT_SEL	0	COLOR_GAIN	129
BLACK_TILT	120	INPUT_RGBGAIN	512
BLACK_GAIN_MAX	380	INPUT_RGBOFFSET	
B_RATIO	120		
LOWER_FUNC	4		
UPPER_FUNC	7		
SKIN_EN	0		
SKIN_T_X	0		
SKIN_T_Y	0		
WHITE_EN	0		
WHITE_T_X	1700		
WHITE_T_Y	1650		

AV/S-VIDEO	
Calibration	Checksum
Option Byte	KS1406
White Balance	KS1409
W/B Movie	Dynamic Contrast
SVP-PX	EEPROM Access Count
LBE	RESET
SOUND(STV825X)	
Sub Micom Download	
T-BORDNUS0-0064 Dec 27 2005	
T-BORDNUS5-0053 [Sec:47]	

Carrier Mute	1
Stereo Pilot High	35
Stereo Pilot Low	16
SAP Pilot High	128
SAP Pilot Low	96
SQTH	112
Audio Delay(Analog)	60
Audio Delay(Digiatl)	0
Melody Speak Volume	7
Melody HP Volume	3

AV/S-VIDEO	
Calibration	Checksum
Option Byte	KS1406
White Balance	KS1409
W/B Movie	Dynamic Contrast
SVP-PX	EEPROM Access Count
LBE	RESET
SOUND(STV825X)	
Sub Micom Download	
T-BORDNUS0-0064 Dec 27 2005	
T-BORDNUS5-0053 [Sec:47]	

AV/S-VIDEO	
Calibration	Checksum
Option Byte	KS1406
White Balance	KS1409
W/B Movie	Dynamic Contrast
SVP-PX	EEPROM Access Count
LBE	RESET
SOUND(STV825X)	
Sub Micom Download	
T-BORDNUS0-0064 Dec 27 2005	
T-BORDNUS5-0053 [Sec:47]	

Checksum	[0000]

AV/S-VIDEO	
Calibration	Checksum
Option Byte	KS1406
White Balance	KS1409
W/B Movie	Dynamic Contrast
SVP-PX	EEPROM Access Count
LBE	RESET
SOUND(STV825X)	
Sub Micom Download	
T-BORDNUS0-0064 Dec 27 2005	
T-BORDNUS5-0053 [Sec:47]	

AGC_REF[AIR]	0x50	PACKET_ERR_THR	0x8
CR_F_GAIN[AIR]	0xD0B		
CR_L_GAIN[AIR]	0x24		
EQ_STEP[AIR]	0xB		
PILOT_GAIN[AIR]	0x1612		
AGC_REF[CABLE]	0x50		
CR_F_GAIN[CABLE]	0xD0B		
CR_L_GAIN[CABLE]	0x24		
EQ_STEP[CABLE]	0xB		
PILOT_GAIN[CABLE]	0x1		
CR_F2_GAIN[CABLE]	0x1612		

AV/S-VIDEO	
Calibration	Checksum
Option Byte	KS1406
White Balance	KS1409
W/B Movie	Dynamic Contrast
SVP-PX	EEPROM Access Count
LBE	RESET
SOUND(STV825X)	
Sub Micom Download	
T-BORDNUS0-0064 Dec 27 2005	
T-BORDNUS5-0053 [Sec:47]	

RF_AGC_TOP	0x8A
CR_PHASE_GAIN	0x4A
CR_PREQ_GAIN	0x1010
PILOT_GAIN	0x1
AGC_REF	0x50
EQ_CTRL	0x30E
PTL_COEFF	0x13
PTL_STEP	0x5A0

AV/S-VIDEO	
Calibration	Checksum
Option Byte	KS1406
White Balance	KS1409
W/B Movie	Dynamic Contrast
SVP-PX	EEPROM Access Count
LBE	RESET
SOUND(STV825X)	
Sub Micom Download	
T-BORDNUS0-0064 Dec 27 2005	
T-BORDNUS5-0053 [Sec:47]	

Dynamic CE	On
Dynamic Dimming	On
LBE Y_MEAN READ	

AV/S-VIDEO	
Calibration	Checksum
Option Byte	KS1406
White Balance	KS1409
W/B Movie	Dynamic Contrast
SVP-PX	EEPROM Access Count
LBE	RESET
SOUND(STV825X)	
Sub Micom Download	
T-BORDNUS0-0064 Dec 27 2005	
T-BORDNUS5-0053 [Sec:47]	

Addr: 2E25, Cnt:	4	Addr: 2E16, Cnt:	1
Addr: 2900, Cnt:	1	Addr: 2E15, Cnt:	1
Addr: 2E20, Cnt:	1	Addr: 2E0D, Cnt:	1
Addr: 2E1F, Cnt:	1	Addr: 2908, Cnt:	1
Addr: 2E1E, Cnt:	1	Addr: 2907, Cnt:	1
Addr: 2E1D, Cnt:	1	Addr: 2906, Cnt:	1
Addr: 2E1C, Cnt:	1	Addr: 2905, Cnt:	1
Addr: 2E1B, Cnt:	1	Addr: 2904, Cnt:	1
Addr: 2E1A, Cnt:	1	Addr: 2903, Cnt:	1
Addr: 2E19, Cnt:	1	Addr: 2902, Cnt:	1
Addr: 2E18, Cnt:	1	Addr: 2901, Cnt:	1
Addr: 2E17, Cnt:	1	Addr: 0, Cnt:	0

AV/S-VIDEO	
Calibration	Checksum
Option Byte	KS1406
White Balance	KS1409
W/B Movie	Dynamic Contrast
SVP-PX	EEPROM Access Count
LBE	RESET
SOUND(STV825X)	
Sub Micom Download	
T-BORDNUS0-0064 Dec 27 2005	
T-BORDNUS5-0053 [Sec:47]	

3-3 White Balance - Calibration

3-3-1 White Balance -Calibration

1. Calibration	→	DTV Calibration PC Calibration (Calibration Condition refer to next page)

3-3-2 White Balance - Adjustment

		(low light)	(hight light)
3. W/B	→	Sub Bright R offset G offset B offset	Sub Contrast R gain G gain B gain

(W/B adjustment Condition refer next page)

3-3-3 Conditions for Measurement

1. On the basis of toshiba ABL pattern : High Light level (57 IRE)
   - INPUT SIGNAL GENERATOR : MSPG-925LTH
     * Mode NO 1 : 744X484@60 Hz
       NO 6 : 1280X720@60 Hz (Component 720P)
       NO 21 : 1024X768@60 Hz
     * Pattern NO 15 : Color bar
       NO 16 : Toshiba ABL Pattern
       NO 17 : 16 gray
2. Optical measuring device : CA210 (FL)
   Please use the MSPG-925 LTH generator for model LNR2355W,LNR2755W,LNR3255W.

3-4 White Ratio (Balance) Adjustment

1. You can adjust the white ratio in factory mode (1:Calibration, 3:White-Balance).
2. Since the adjustment value and the data value vary depending on the input source, you have to adjust these in CVBS, Component 1 and HDMI 1 modes.
3. The optimal values for each mode are configured by default. (Refer to Table 1, 2.)
   It varies with Panel's size and Specification.

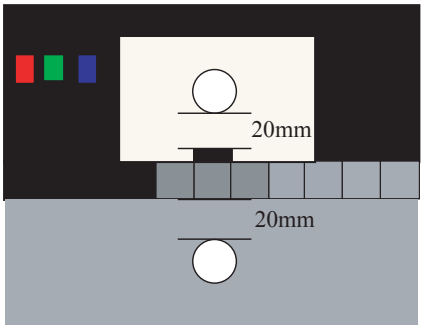

- Equipment : CS-1000
- Pattern: Master MSPG925 #16 "ABL Pattern" as standard
  - Use other equipment only after comparing the result with that of the Master equipment.
- Set Aging time : 30min ↑
- Calibration and Manual setting for WB adjustment.

  HDMI: No Calibration Manual adjustment at #16 pattern (720p)

  COMP: Calibration at #24 Chessboard Pattern → Manual adjustment at #16 pattern (720p)

  CVBS: Calibration at #24 Chessboard Pattern →Manual adjustment at #16 pattern (NTSC)

  PC : Calibration at #24 Chessboard Pattern →No Manual adjustment (1024x768@60Hz)

-White Balance Manual Adjustment (ABL Pattern)

	Adjustment Coordinate				
		x	y	Y (cd/m^2)	T(K) ± MPCD
CVBS	L/L	263	263	-	15000K/0
	L/L	263	263	3.8(1.1Ft)	15000K/0
Component (720p)	H/L	263	263	-	15000K/0
	L/L	263	263	4.2(1.2Ft)	15000K/0
HDMI (1080i)	H/L	263	263	-	15000K/0
	L/L	263	263	4.2(1.2Ft)	15000K/0

-Adjustment Specification

White Balance : High light (± 2), Low light (± 3)

Luminance : High light (Don't care), Low light (± 0.2 Ft/L)

3-5 Servicing Information

3-5-1 USB Download Method

1. Downloading boot code
   (1) Change the boot code's file name into "boot.bin".
   (2) Copy the "boot.bin" into the path "/bordeaux/us" in USB flash driver.
   (3) Turn off LCD TV.
   (4) Insert the USB flash driver into the service 1 jack of LCD TV.
   (5) Turn on LCD TV.
   (6) The banner osd "Updating SW..." is displayed.
   (7) The banner osd "Completed..." is displayed when the updating is completed.
   (8) Turn off and remove the USB flash driver from LCD TV
   (9) Check the program version.

2. Downloading application code
   (1) Change the application code's file name into "appl.rom".
   (2) Copy the "appl.rom" into the path "/bordeaux/us" in USB flash driver.
   (3) Turn off LCD TV.
   (4) Insert the USB flash driver into the service 1 jack of LCD TV.
   (5) Turn on LCD TV.
   (6) The banner osd "Updating SW..." is displayed.
   (7) The banner osd "Completed..." is displayed when the updating is completed.
   (8) Turn off and remove the USB flash driver from LCD TV
   (9) Check the program version.

Memo

4 Troubleshooting

4-1 No Power

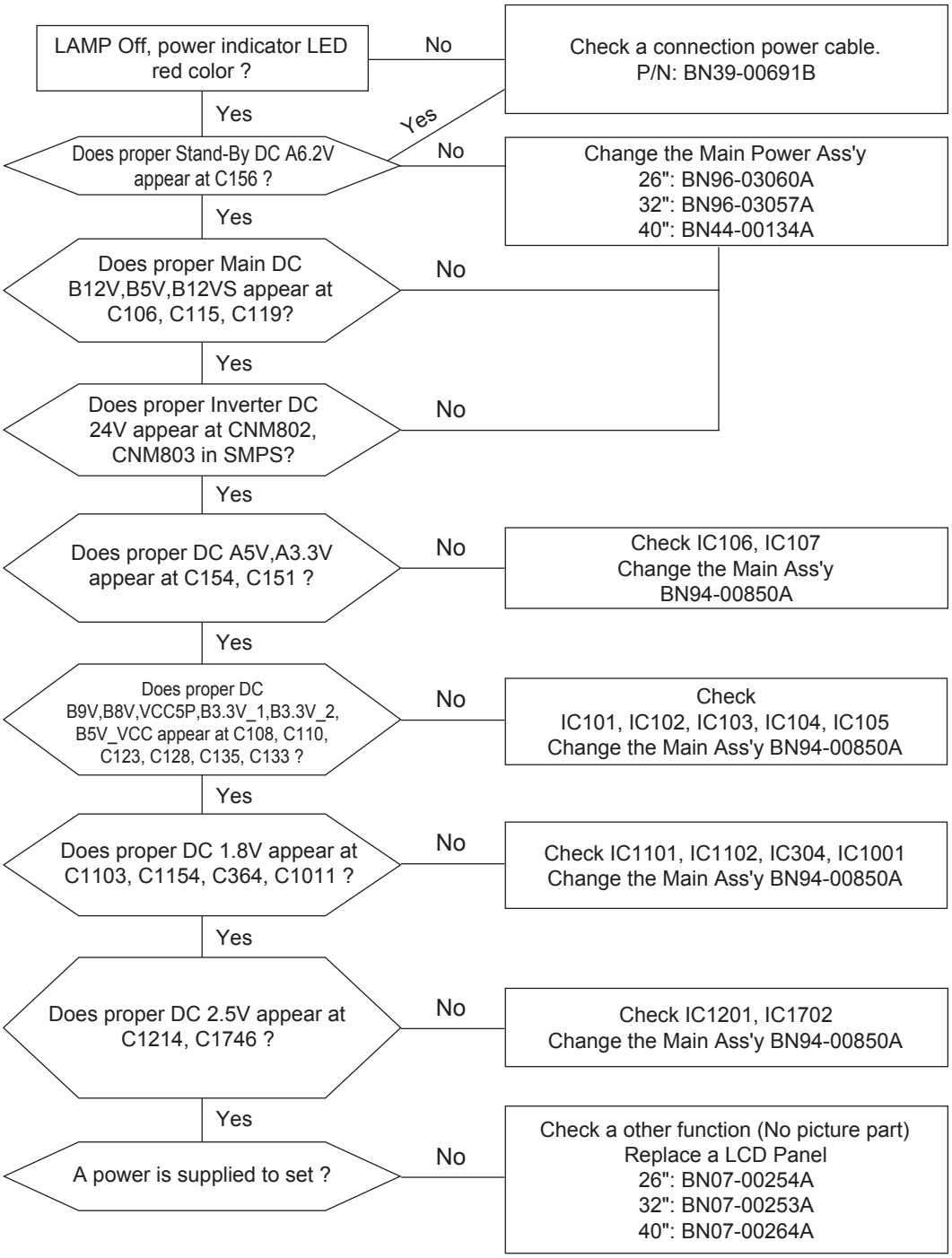

4-2 No Video (Analog PC Signal)

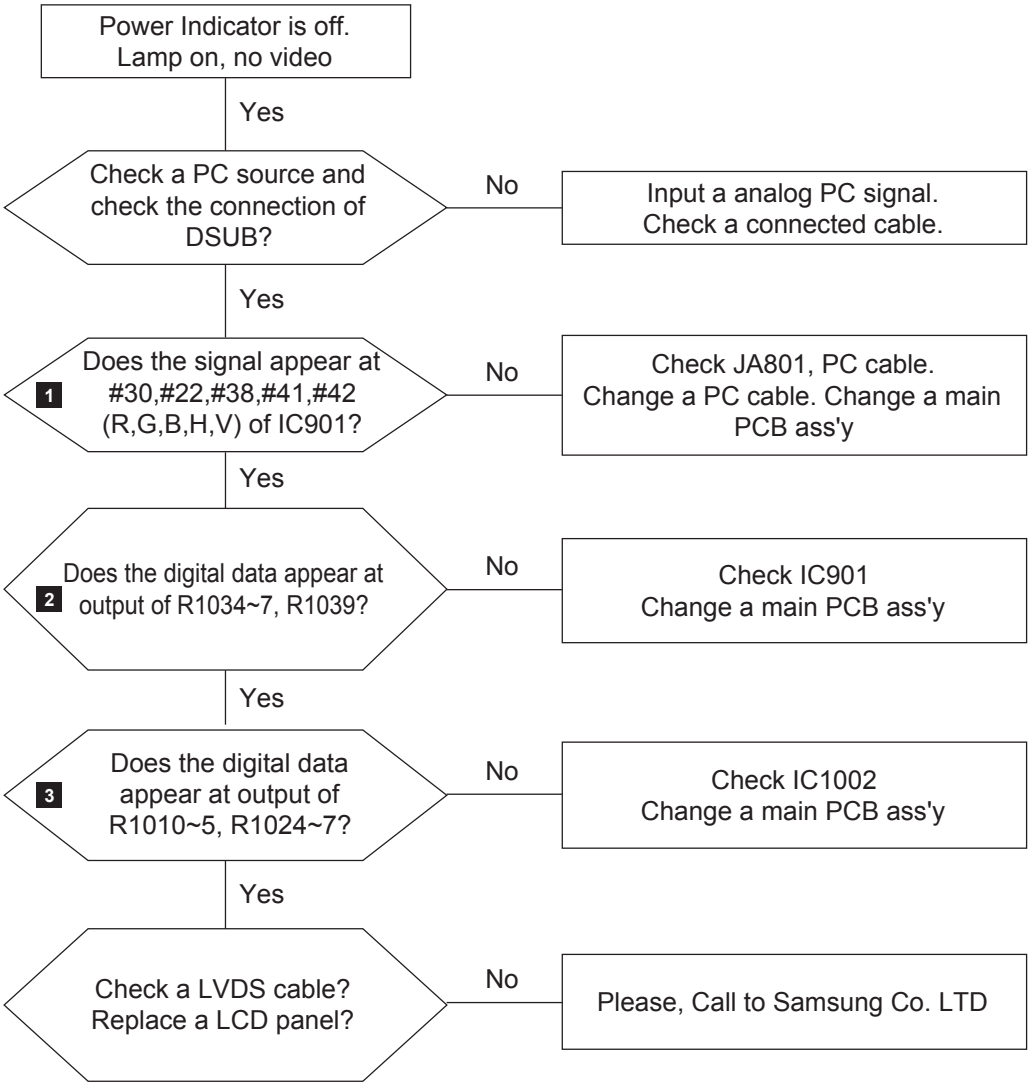

WAVEFORMS

1 **2** PC Input (V-Sync, H-Sync)

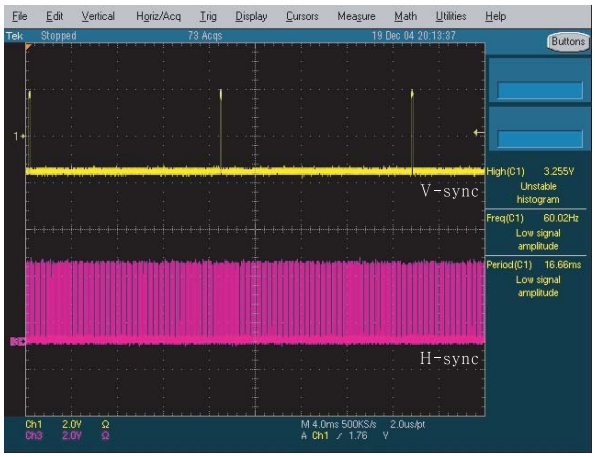

3 LVDS Out (CLK+/-)

4-3 No Video (HDMI - Digital Signal)

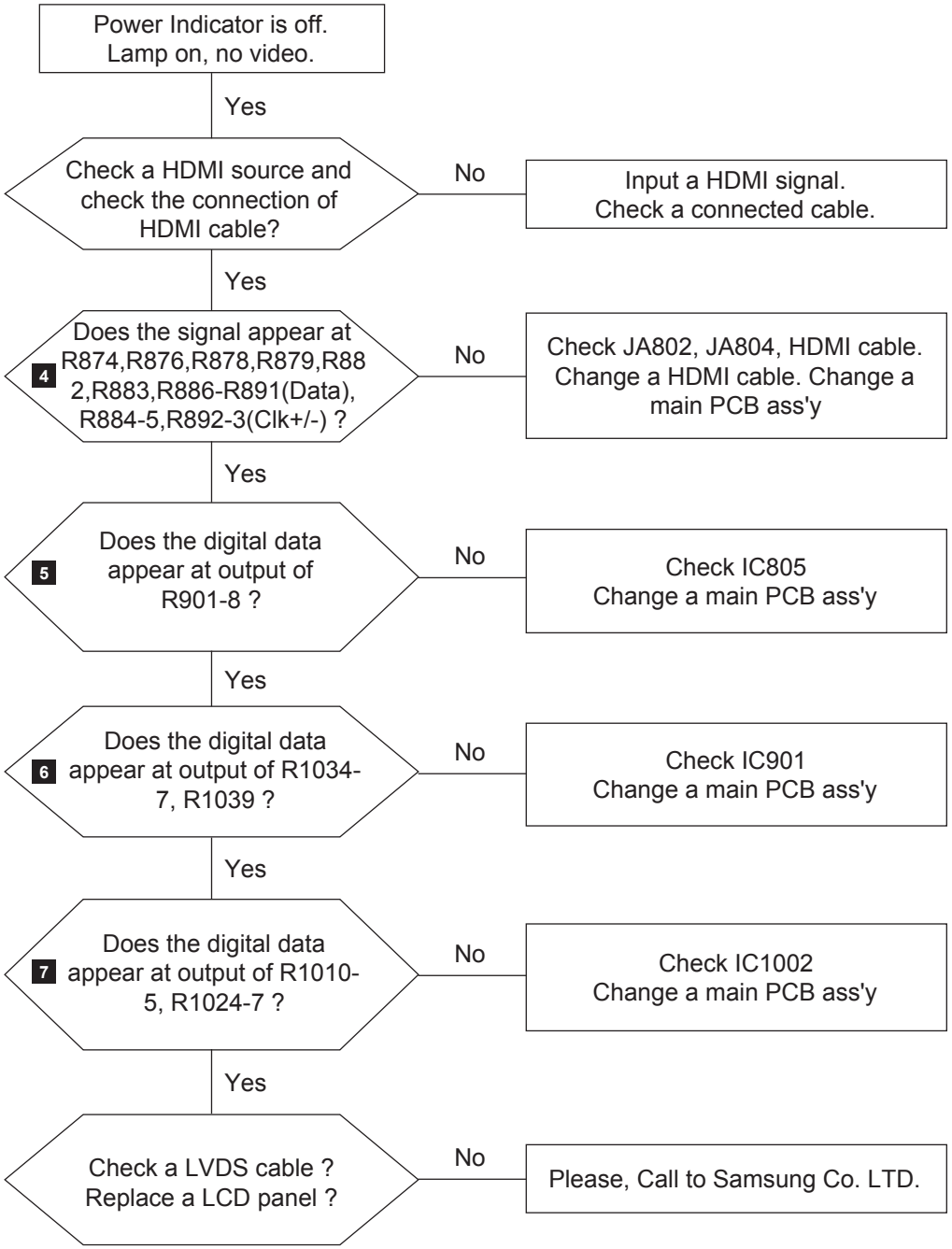

WAVEFORMS

4 **5** HDMI Input (CLK +/-)

4-4 No Picture (Tuner_CVBS)

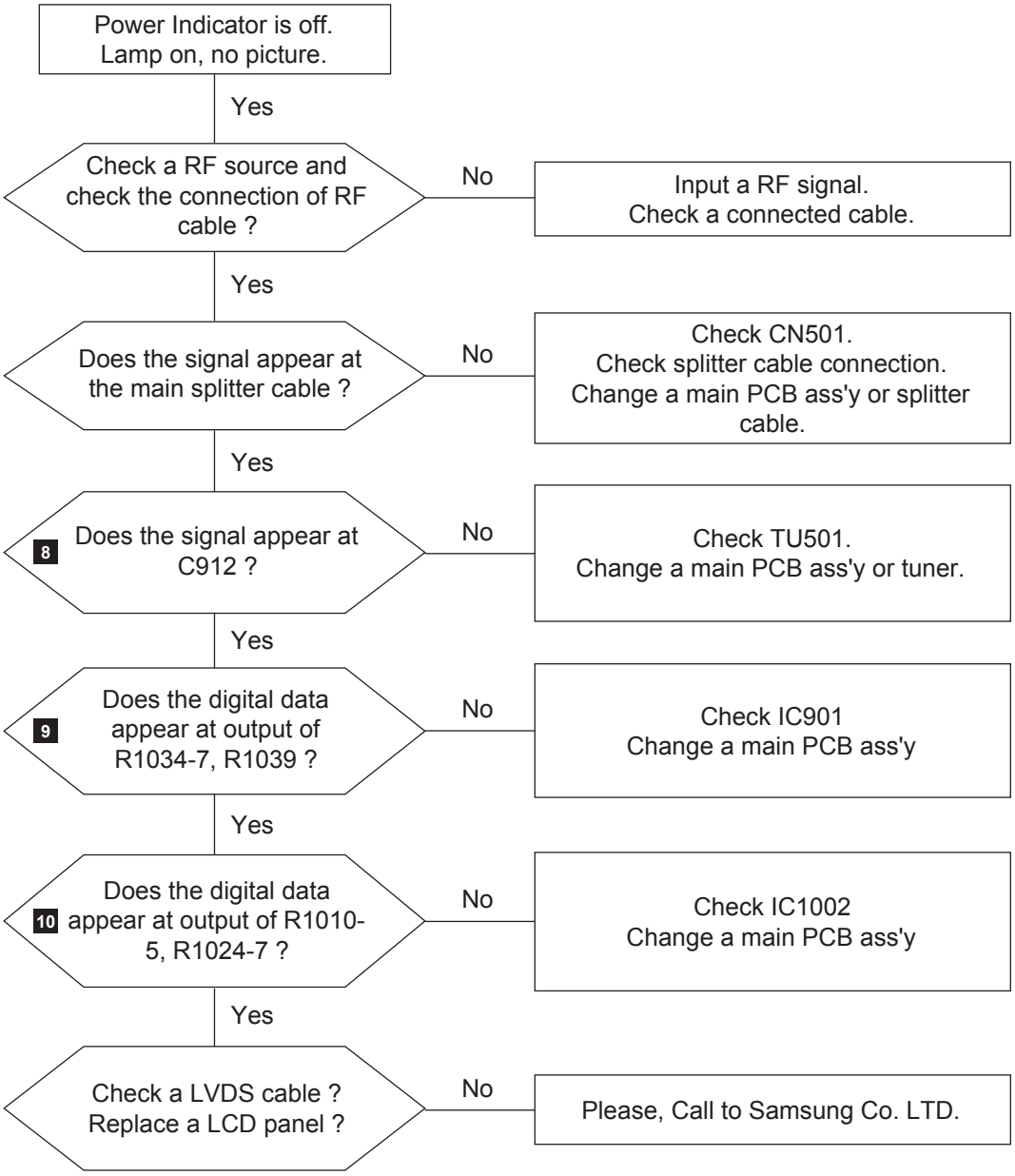

WAVEFORMS

6 Tuner CVBS Out (Pattern: Grey Bar)

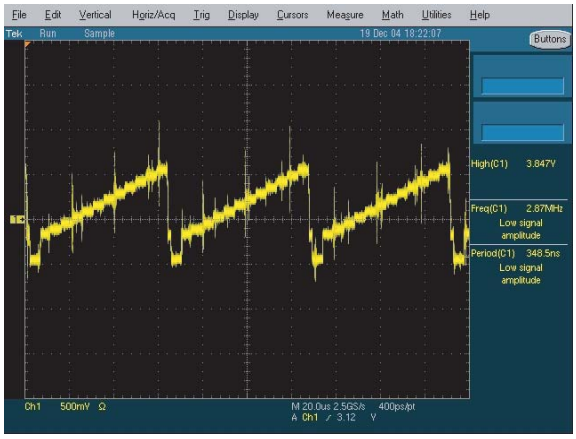

4-5 No Picture (Tuner DTV TS)

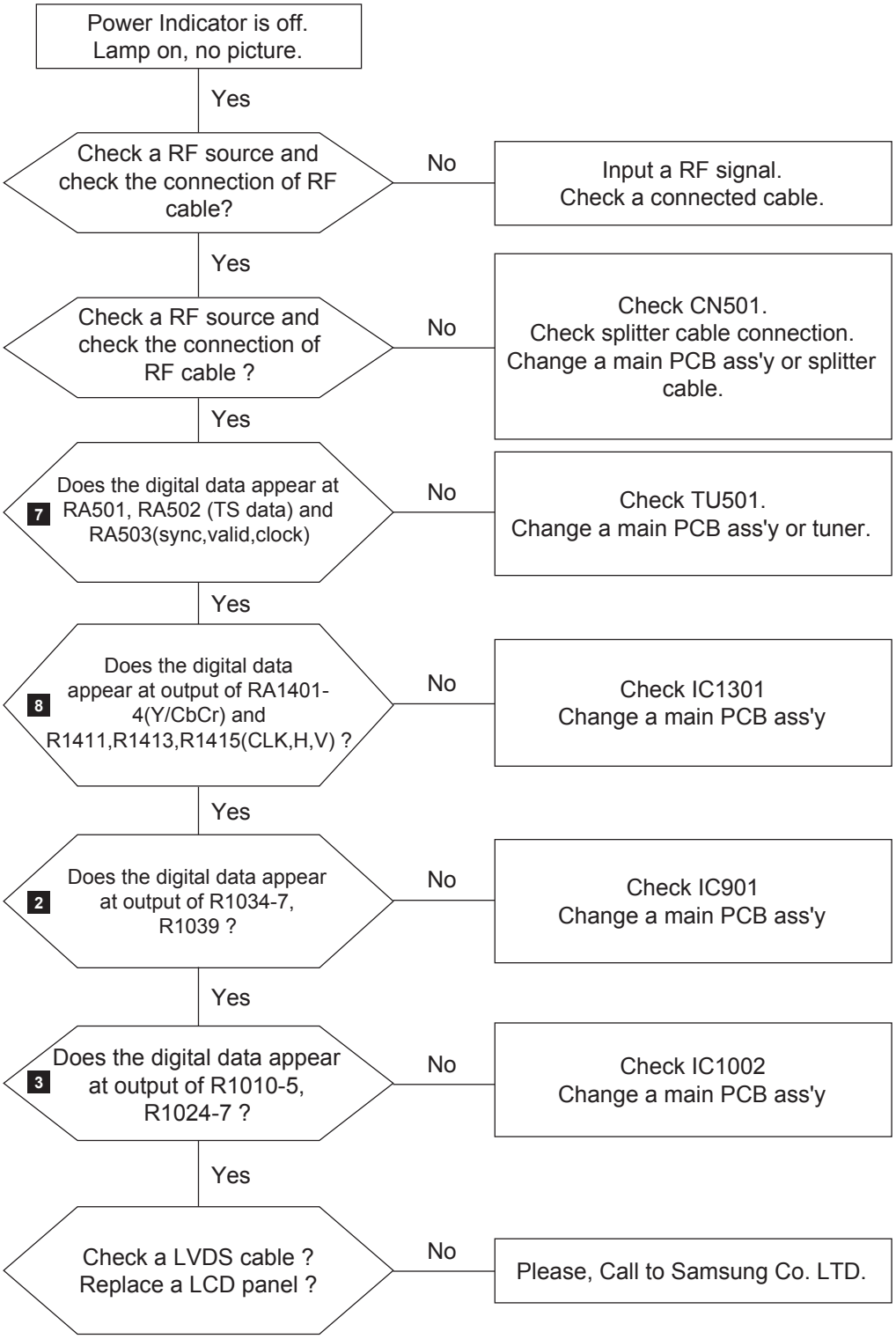

WAVEFORMS

7 TS DATA Out (Clk, Data[0])

8 Eagle+ Out (Clk, H-Sync)

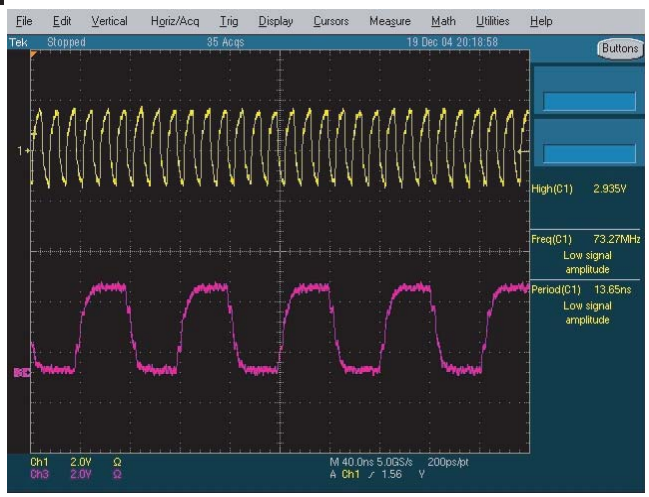

4-6 No Picture(Video CVBS)

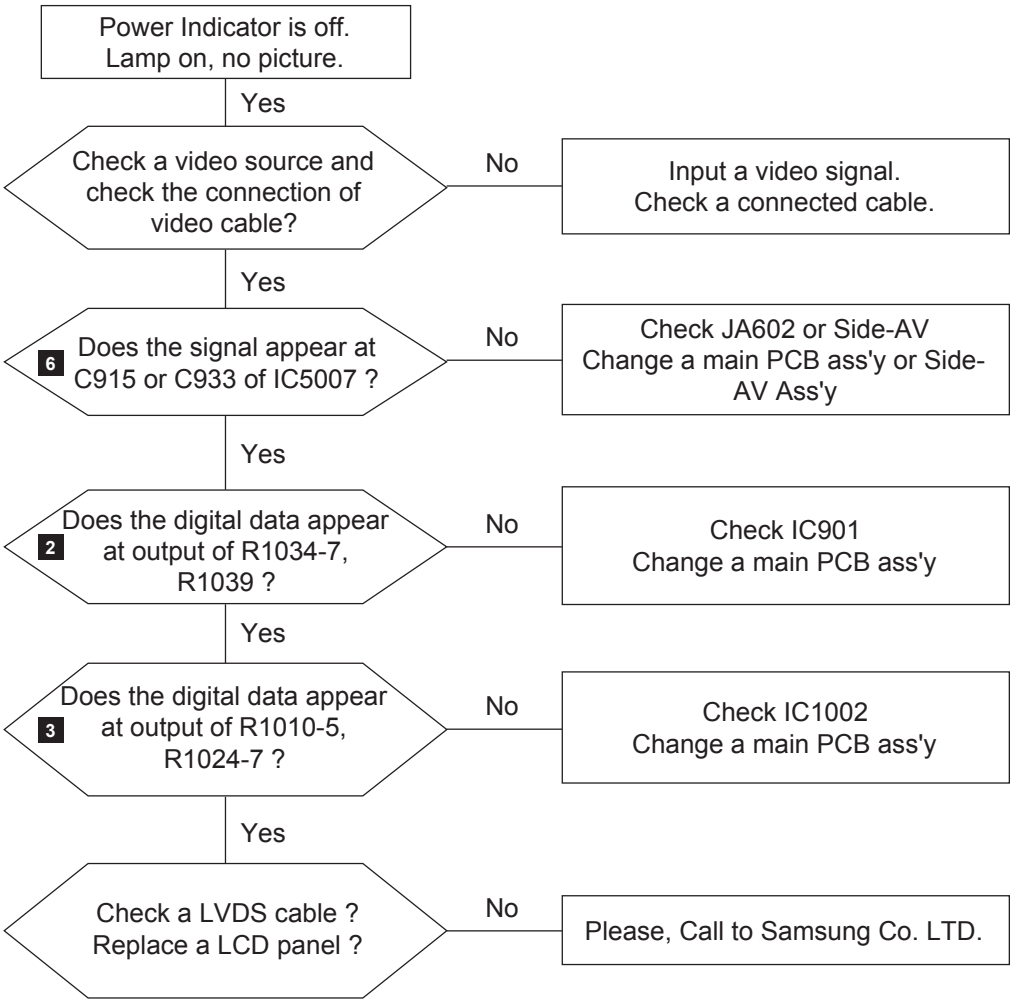

4-7 No Picture(S-Video Y/C)

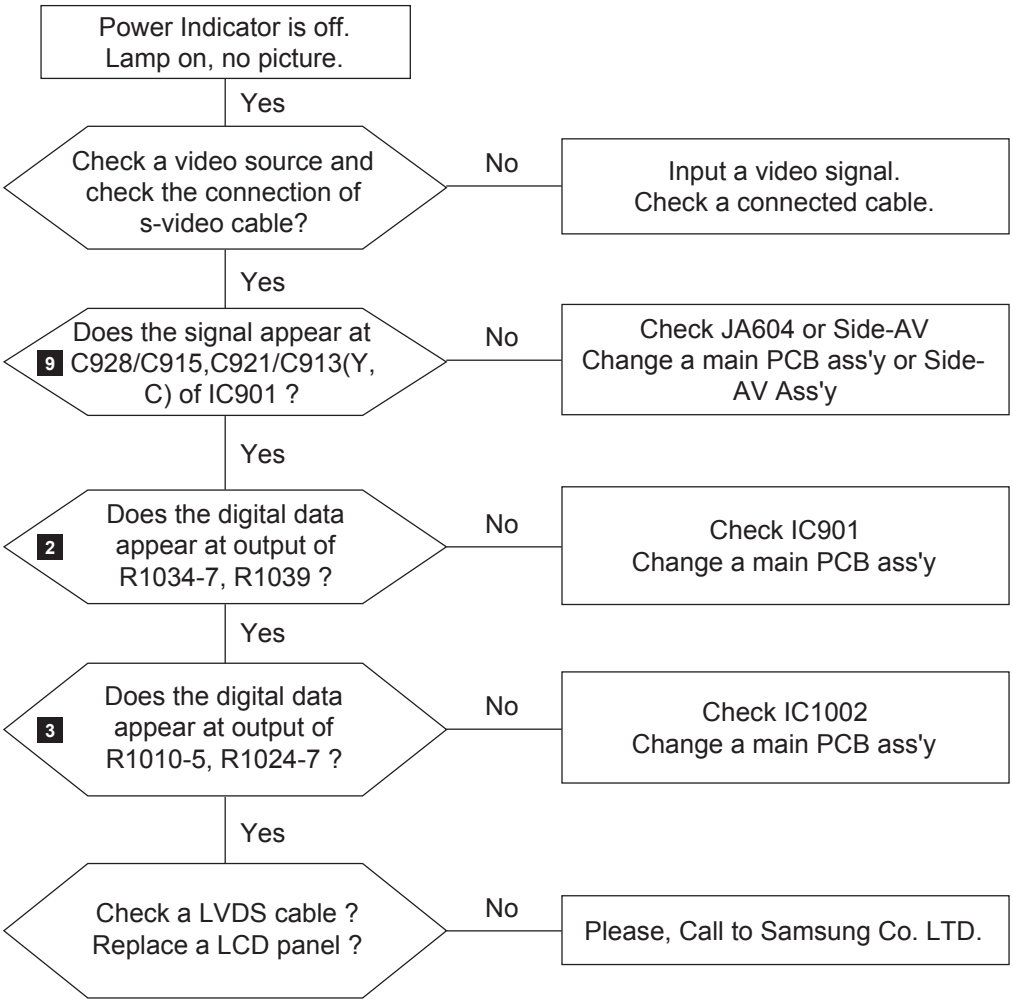

WAVEFORMS

9 S-VIDEO Input (Y/C)

4-8 No Picture(Component1, 2 : 480i, 480p, 720p, 1080i[Y, Pb, Pr])

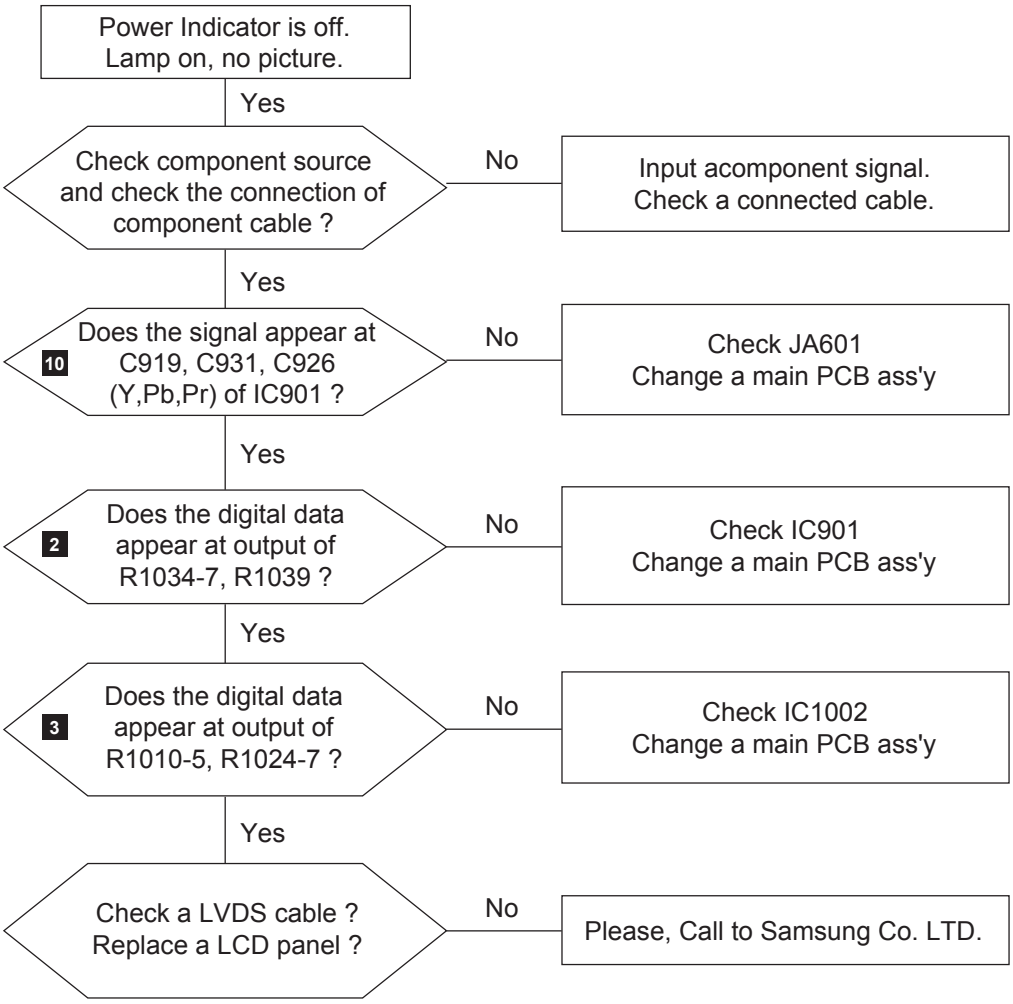

WAVEFORMS

10 Component Input (Y/Pb)

4-9 No Sound

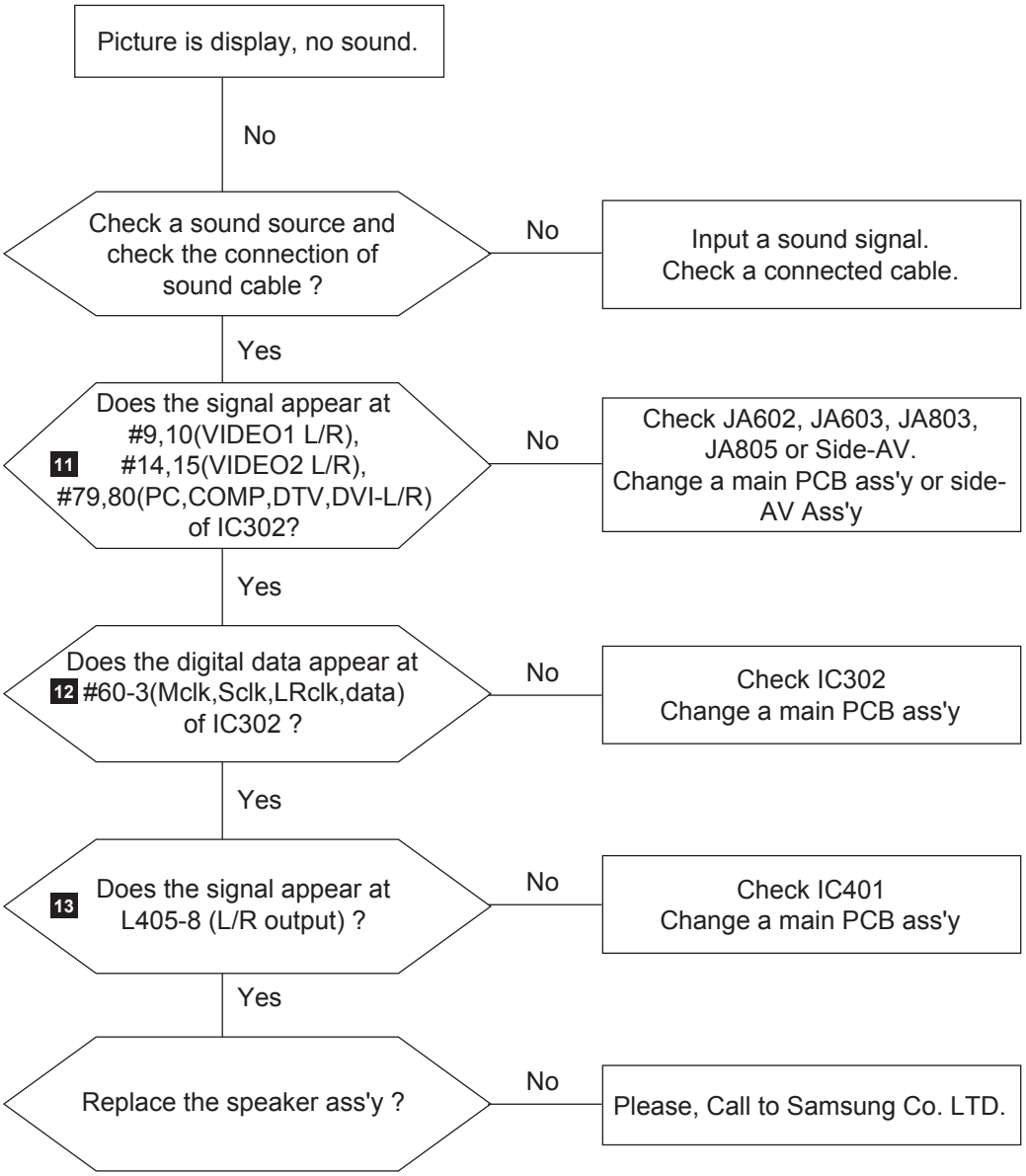
Picture is display, no sound.
No
Check a sound source and check the connection of sound cable ?
No
Input a sound signal.
Check a connected cable.
Yes
Does the signal appear at #9,10(VIDEO1 L/R), 11 #14,15(VIDEO2 L/R), #79,80(PC,COMP,DTV,DVI-L/R) of IC302?
No
Check JA602, JA603, JA803, JA805 or Side-AV.
Change a main PCB ass'y or side-AV Ass'y
Yes
Does the digital data appear at 12 #60-3(Mclk,Sclk,LRclk,data) of IC302 ?
No
Check IC302
Change a main PCB ass'y
Yes
Does the signal appear at 13 L405-8 (L/R output) ?
No
Check IC401
Change a main PCB ass'y
Yes
Replace the speaker ass'y ?
No
Please, Call to Samsung Co. LTD.

WAVEFORMS

11 Audio Input (Sign Wave)

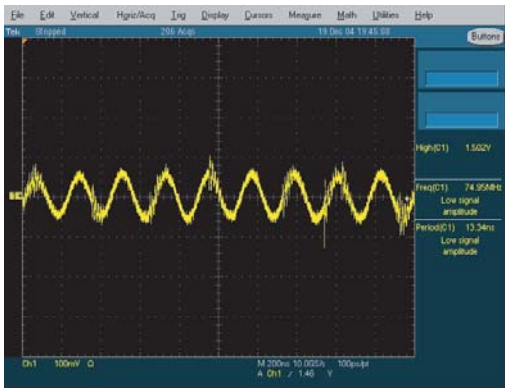

12 I2S Input (Clk, Data)

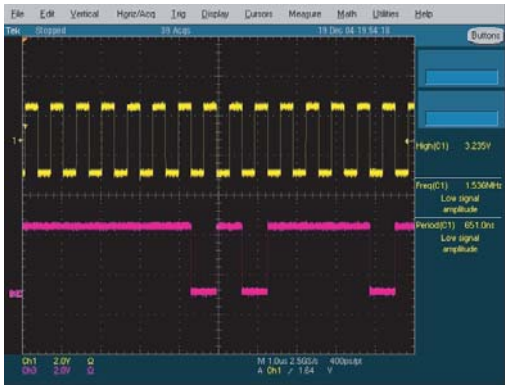

13 Audio Amp Out (Sign Wave)

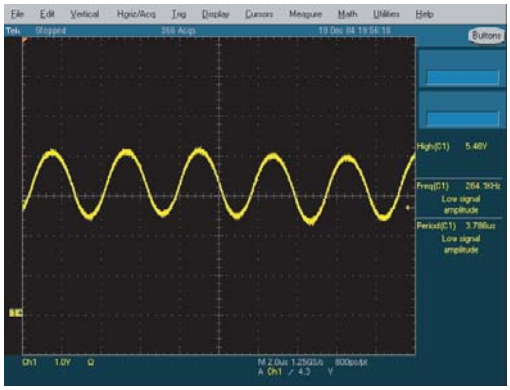

5 Exploded View and Parts List

- You can search for updated part codes through ITSELF web site.
  URL : http://itself.sec.samsung.co.kr/

5-1 LN-S2641D Exploded View

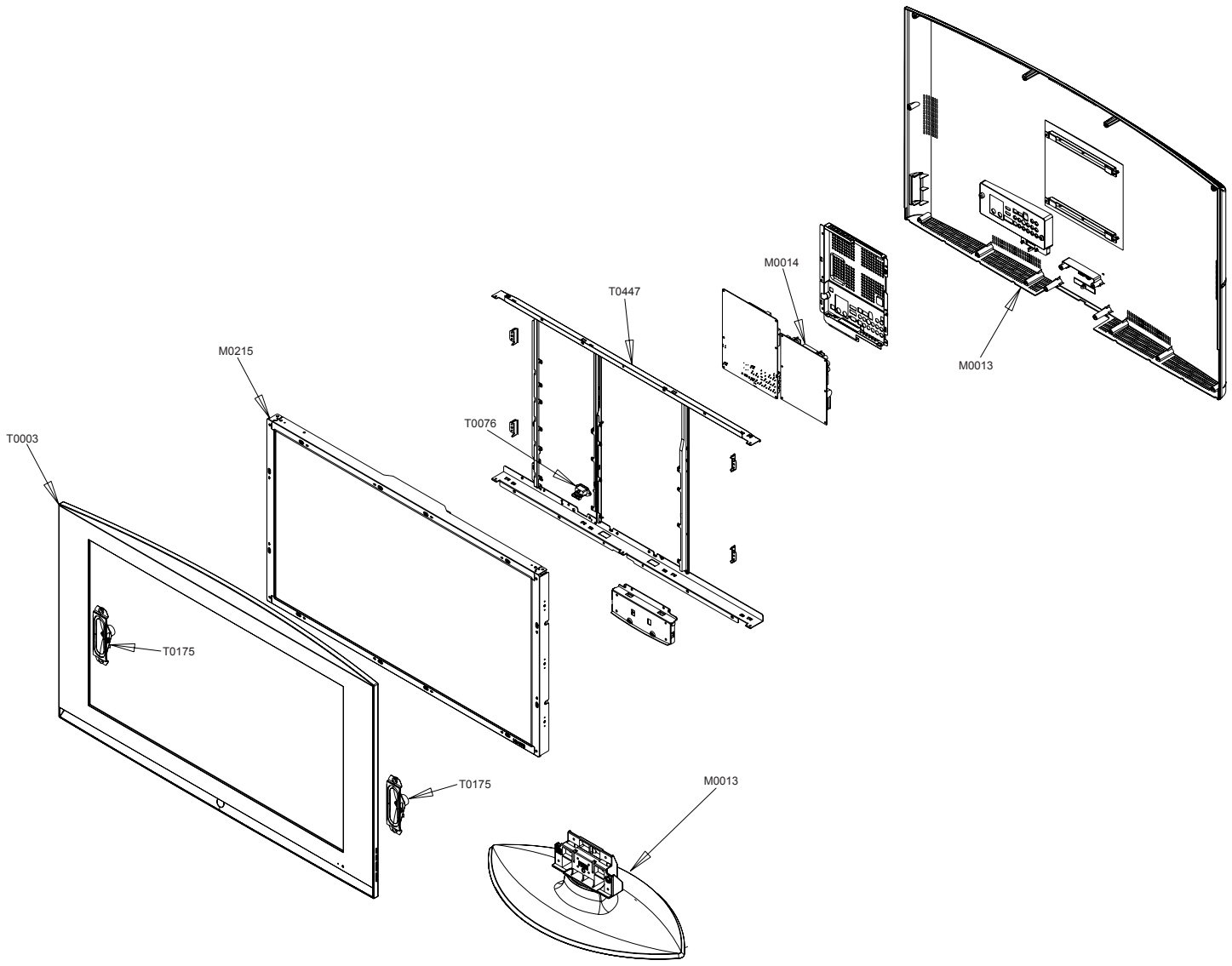

5-2 LN-S2641D Parts list

Location	Code.No	Item & Specification	Q'ty	SA/SNA	Remark
T0003	BN96-03174A	ASSY COVER P-FRONT;26T70,UO,HIPS,V0,BK50	1	SA	
T0175	BN96-03279A	ASSY SPEAKER P;16ohm,Sonoma 26,Left,5W,N	1	SNA	
T0175	BN96-03280A	ASSY SPEAKER P;16ohm,Sonoma 26,Right,5W,	1	SNA	
M0215	BN07-00254A	LCD-PANEL;T260XW02,8bit,626.0*373.0*50.0	1	SA	
T0447	BN96-03008D	ASSY BRACKET P-PANEL;BORDEAUX,26,AUO,SMP	1	SNA	
T0076	BN39-00615D	CBF HARNESS;BORDEAUX,1617#22,3P,1P,RING,	1	SA	
M0014	BN94-00963C	ASSY PCB MAIN-AMZ;LNS2641DX/XAA,AM LCD	1	SNA	
M0013	BN96-03189A	ASSY COVER P-REAR;26T70,UO,HIPS,V0,BK500	1	SA	
M0013	BN96-03192A	ASSY STAND P-BASE;26T70,HIPS,HB,BK500,BK	1	SA	

5-3 LN-S3241D Exploded View

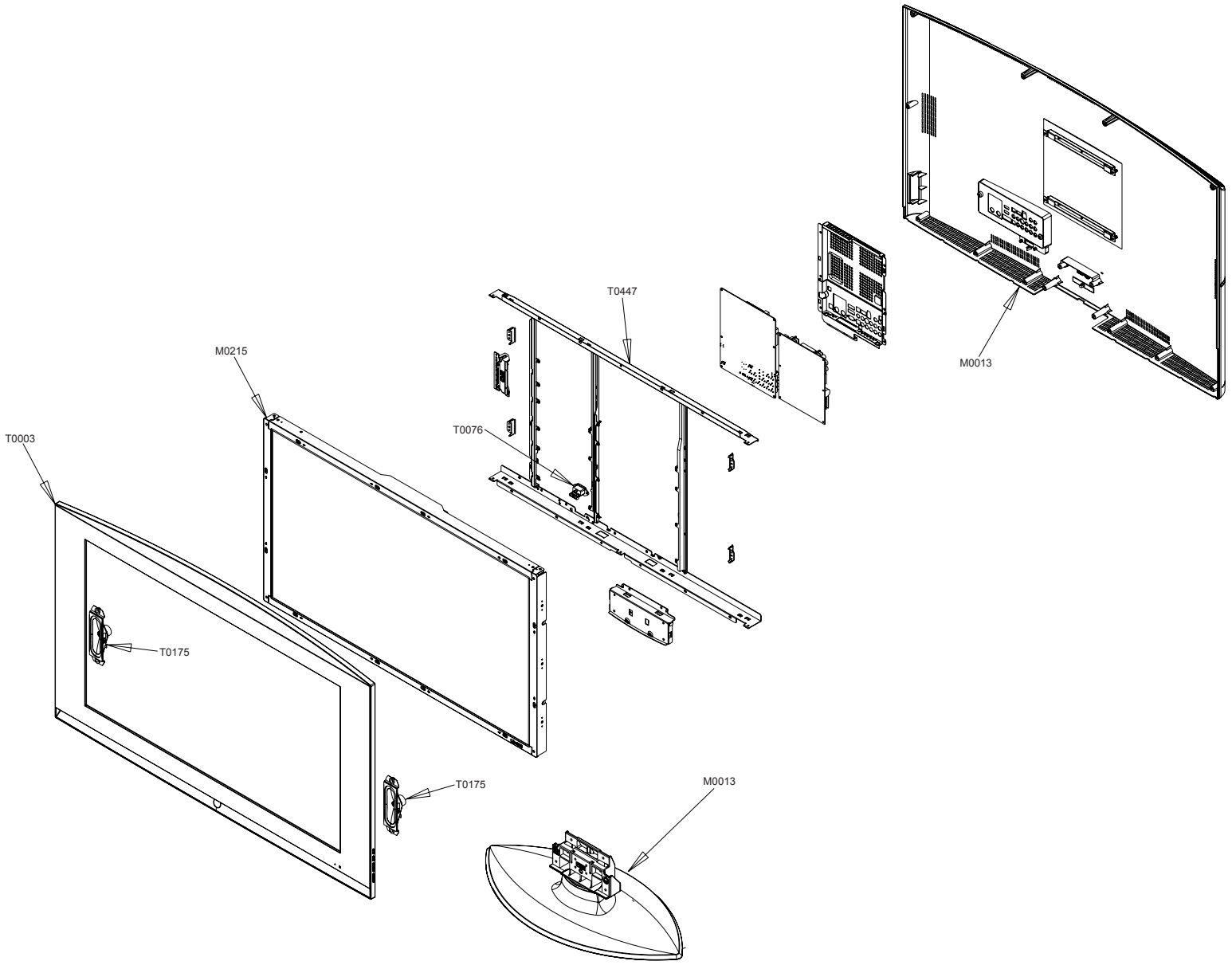

5-4 LN-S3241D Parts list

Location	Code.No	Item & Specification	Q'ty	SA/SNA	Remark
T0003	BN96-03175A	ASSY COVER P-FRONT;32T70,UO,HIPS,V0,BK50	1	SA	
T0175	BN96-03247A	ASSY SPEAKER P;8ohm,Sonoma 32,Left,10W,N	1	SA	
T0175	BN96-03248A	ASSY SPEAKER P;8ohm,Sonoma 32,Right,10W,	1	SA	
M0215	BN07-00207A	LCD-PANEL;V320B1-L01,Duomo,8bit,760*450*	1	SA	
T0447	BN96-02999B	ASSY BRACKET P-PANEL;BORDEAUX,32,AMLCD,S	1	SNA	
T0076	BN39-00615D	CBF HARNESS;BORDEAUX,1617#22,3P,1P,RING,	1	SA	
M0013	BN96-03188A	ASSY COVER P-REAR;32T70,UO,HIPS,V0,BK500	1	SA	
M0013	BN96-03191A	ASSY STAND P-BASE;32T70,HIPS,HB,BK500,BK	1	SA	

5-5 LN-S4041D Exploded View

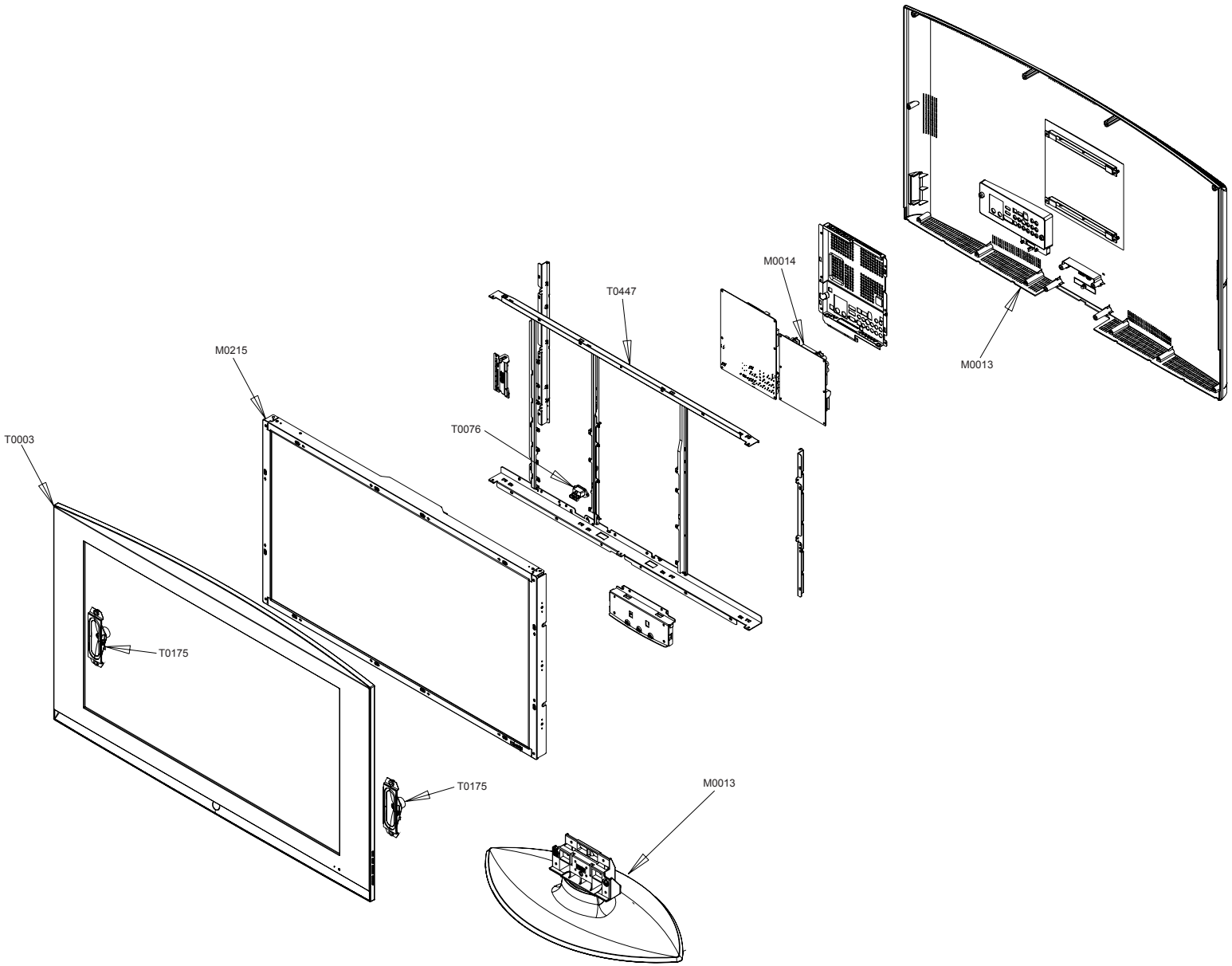

5-6 LN-S4041D Parts list

Location	Code.No	Item & Specification	Q'ty	SA/SNA	Remark
T0003	BN96-03184A	ASSY COVER P-FRONT;40T70,UO,HIPS,V0,BK50	1	SA	
T0175	BN96-03247A	ASSY SPEAKER P;8ohm,Sonoma 32,Left,10W,N	1	SA	
T0175	BN96-03248A	ASSY SPEAKER P;8ohm,Sonoma 32,Right,10W,	1	SA	
M0215	BN07-00264A	LCD-PANEL;LTA400WT-L01,8bit,952*551*51.0	1	SA	
T0447	BN96-03528A	ASSY BRACKET P-PANEL;SONOMA,40,SECC,BUIL	1	SA	
T0076	BN39-00615D	CBF HARNESS;BORDEAUX,1617#22,3P,1P,RING,	1	SA	
M0014	BN94-00963E	ASSY PCB MAIN-SPZ;LNS4041DX/XAA	1	SA	
M0013	BN96-03187A	ASSY COVER P-REAR;40T70,UO,HIPS,V0,BK500	1	SA	
M0013	BN96-03190A	ASSY STAND P-BASE;40T70,HIPS,HB,BK500,BK	1	SA	

6 Electrical Parts List

-You can search for updated part codes through ITSELF web site.
URL : http://itself.sec.samsung.co.kr/

6-1 LN-S2641D Parts List

Level	Loc. No.	Code No.	Description & Specification	Q'ty	SA/SNA
0		LNS2641DX/XAA	LN-S2641D,E52A/26T70-GSM,26,LCD-TV,UNITE	0	
1	M0001	BN90-00859A	ASSY COVER FRONT;26T70,UO,SONOMA	1	SNA
..2	M0081	6006-001096	SCREW-TAPTITE;BH,+,WP,B,M4.0,L12,ZPC(BLK	4	SNA
..2	T0003	BN96-03174A	ASSY COVER P-FRONT;26T70,UO,HIPS,V0,BK50	1	SA
...3	M0081	6003-001003	SCREW-TAPTITE;BH,+,B,M4,L12,ZPC(BLK),SWR	2	SNA
...3	M0081	6003-001003	SCREW-TAPTITE;BH,+,B,M4,L12,ZPC(BLK),SWR	1	SNA
...3	M0081	6003-001003	SCREW-TAPTITE;BH,+,B,M4,L12,ZPC(BLK),SWR	2	SNA
...3	T0056	BN63-02403A	COVER-DECORATION;SONOMA 26,HIPS,HB,GR503	1	SNA
...3	M0112	BN63-02404A	COVER-FRONT;26T70,UO,HIPS,V0,BK500,BKP-1	1	SNA
...3	T0059	BN64-00379A	INDICATOR LED;ROME-II,23,PC,CLEAR	1	SNA
...3	T0061	BN64-00453A	WINDOW-REMOCON;32R71,PC,V0,VIOLET,DIFFUS	1	SNA
...3	T0022	BN64-00467A	KNOB CONTROL;SONOMA26,32,40,ABS,-,-,-,V0	1	SNA
...3	T0023	BN64-00476A	KNOB POWER;SONOMA,26,32,40,HIPS,HB,GR503	1	SNA
...3	T0054	BN64-00477A	KNOB-DECORATION;SONOMA26,32,40,ABS,HB,GR	1	SNA
...3	T0382	BP61-00509C	HOLDER-CARE;PJT,ACRYL-FOAM,T0.25,W20.0mm	0.28	SNA
...3	M0162	6502-001067	CABLE CLAMP;DAFC-1300,ID2.2,T5.2,NYLIN6/	2	SNA
...3	T0069	AA60-00171F	SPACER-FELT;50L2,FELT,350,T0.5,5	2	SNA
...3	M0146	BN96-03437A	ASSY BOARD P-POWER;BORDEAUX2,CT5000-4150	1	SA
...3	M0145	BN96-03466A	ASSY BOARD P-FUNCTION;SONOMA,SJ06-01-008	1	SA
...3	T0060	BN61-01655A	SPRING ETC;STS-304 SUS,D8,L12,T0.5	1	SA
..2	T0382	BP61-00495C	HOLDER-CARE;PJT,ACRYL-FOAM,T0.25,W30.0mm	0.2	SNA
..2	T0175	BN96-03279A	ASSY SPEAKER P;16ohm,Sonoma 26,Left,5W,N	1	SNA
..2	T0175	BN96-03280A	ASSY SPEAKER P;16ohm,Sonoma 26,Right,5W,	1	SNA
1	M0216	BN90-00877A	ASSY STAND;26T70,SONOMA	1	SNA
..2	T0524	6902-000561	BAG PE;HDPE+NITRON(DOUBLE),T0.015+T0.5,W	1	SNA
..2	M0013	BN96-03192A	ASSY STAND P-BASE;26T70,HIPS,HB,BK500,BK	1	SA
...3	T0081	6002-001294	SCREW-TAPPING;BH,+,,M4,L16,ZPC(BLK)	3	SA
...3	M0081	6003-001239	SCREW-TAPTITE;FH,+,B,M4,L10,ZPC(YEL),SWR	6	SA
...3		BN61-01830A	BRACKET-STAND BOTTOM;26 MILANO,SECC,T2.0	1	SNA
...3		BN61-02369A	GUIDE-STAND;SONOMA 26,HIPS V0,BK500	1	SNA
...3	M0111	BN63-01946B	COVER-STAND;26T70,HIPS,HB,BK500,BKP-1526	1	SNA
...3	T0132	BN73-00052A	RUBBER FOOT;ARES 17,SILICON,DIA 17 * T1.	6	SNA
1	M0002	BN90-00880A	ASSY COVER REAR;26T70,UO	1	SNA
..2	T0081	6002-001294	SCREW-TAPPING;BH,+,,M4,L16,ZPC(BLK)	9	SA
..2	T0081	6002-001294	SCREW-TAPPING;BH,+,,M4,L16,ZPC(BLK)	2	SA
..2	M0013	BN96-03189A	ASSY COVER P-REAR;26T70,UO,HIPS,V0,BK500	1	SA
...3	T0101	BN61-02058A	BRACKET-WALL;23,27,MGM,SECC,T1.6	2	SNA
...3	M0006	BN63-02408A	COVER-REAR;26T70,UO,HIPS,V0,BK500,SONOMA	1	SNA
...3	T0064	BN65-00002A	CLAMPER CORE;BORDEAUX,PP,V0,BLK	1	SNA
...3	T0071	BN64-00447J	INLAY-TERMINAL;26T70,PS SHEET,T0.5,BUILT	1	SNA
1	MP1.0	BN91-01017D	ASSY LCD-AMZ;LNS2651D	1	SNA
..2	M0215	BN07-00254A	LCD-PANEL;T260XW02,8bit,626.0*373.0*50.0	1	SA
1		BN91-01018C	ASSY SHIELD-AUO;LN-S2641D,26",SONOMA	1	SNA
..2	M0081	6003-000115	SCREW-TAPTITE;BH,+,B,M3,L6,ZPC(BLK),SWRC	4	SNA
..2	M0081	6003-000115	SCREW-TAPTITE;BH,+,B,M3,L6,ZPC(BLK),SWRC	4	SNA
..2	M0081	6003-000115	SCREW-TAPTITE;BH,+,B,M3,L6,ZPC(BLK),SWRC	7	SNA
..2	M0081	6003-001003	SCREW-TAPTITE;BH,+,B,M4,L12,ZPC(BLK),SWR	2	SNA
..2	M0081	6003-001003	SCREW-TAPTITE;BH,+,B,M4,L12,ZPC(BLK),SWR	1	SNA
..2	M0081	6003-001003	SCREW-TAPTITE;BH,+,B,M4,L12,ZPC(BLK),SWR	4	SNA
..2	M0081	6003-001003	SCREW-TAPTITE;BH,+,B,M4,L12,ZPC(BLK),SWR	2	SNA
..2	M0081	6003-001003	SCREW-TAPTITE;BH,+,B,M4,L12,ZPC(BLK),SWR	4	SNA
..2	M0081	6003-001003	SCREW-TAPTITE;BH,+,B,M4,L12,ZPC(BLK),SWR	2	SNA
..2	T0081	6006-000245	SCREW-MACHINE;WSP,PH,+,M4,L8,ZPC(YEL),SW	1	SNA
..2	T0081	6006-000245	SCREW-MACHINE;WSP,PH,+,M4,L8,ZPC(YEL),SW	4	SNA
..2	M2893	BN39-00691B	LEAD CONNECTOR;LE32R71BX,UL1007#26,16P,1	1	SA
..2		BN61-02207A	BRACKET-PANEL SIDE;Bordeaux 26,SECC,T1.2	4	SNA
..2		BN61-02364A	BRACKET-STAND LINK;SONOMA 32,SECC,T1.6	1	SNA
..2	T0447	BN96-03008D	ASSY BRACKET P-PANEL;BORDEAUX,26,AUO,SMP	1	SNA
...3	M0146	BN61-02205B	BRACKET-PANEL TOP;Bordeaux 26,SECC,T1.2	1	SNA

Level	Loc. No.	Code No.	Description & Specification	Q'ty	SA/SNA
...3		BN61-02206B	BRACKET-PANEL BOTTOM;Bordeaux 26,SECC,T1	1	SNA
...3		BN61-02208B	BRACKET-GUIDE MAIN;Bordeaux 26,SECC,T1.2	1	SNA
...3		BN61-02210A	BRACKET-GUIDE POWER;Bordeaux 26,SECC,T1.	1	SNA
...3	M0131	AA63-01437A	GASKET;Bordeaux,Conductive Fabric,20mm,9	1	SNA
...3	M0131	AA63-01438A	GASKET;Bordeaux,Conductive Fabric,7mm,8m	1	SNA
...3		BN61-02209B	BRACKET-GUIDE POWER;Bordeaux 26,UO,SECC,	1	SNA
..2	T0159	BN96-03060A	ASSY PCB P-SMPS;Bordeaux 26,LE26R71B,160	1	SA
..2	T0069	AA60-00171F	SPACER-FELT;50L2,FELT,350,T0.5,5	2	SNA
..2	M2893	BH39-00362G	LEAD CONNECTOR;SONOMA,UL1007#26,5PIN,100	1	SA
..2	T0076	BN39-00615D	CBF HARNESS;BORDEAUX,1617#22,3P,1P,RING,	1	SA
..2	T0562	6046-001013	STAND OFF;M3,L5,Ni PLT,SUM24L,#4-40	2	SNA
..2	M2893	BN39-00603E	LEAD CONNECTOR;RE26**AU,UL1007#26,14P,15	1	SA
..2	M2893	BN39-00712C	LEAD CONNECTOR-LVDS;Bordeaux,UL1571#30,3	1	SA
..2		BN96-03298C	ASSY SHIELD P-PCB MAIN;BORDEAUX,26,SECC,	1	SNA
...3	M0131	AA63-01436A	GASKET;Bordeaux,Conductive Fabric,5mm,7m	2	SNA
...3	T0603	BN63-02325A	SHIELD-PCB MAIN;Bordeaux 32,SECC,T0.5,BU	1	SNA
..2	M0114	BN61-02500A	HOLDER-WIRE;NYLON6.6,NATURAL	2	SNA
..2	CCMM1	BN73-00024D	SILICON/RUBBER;BORDEAUX,SILICON,28x28XT6	1	SA
1	M0045	BN92-01661E	ASSY ACCESSORY;LNS2641DX/XAA,SONOMA	1	SNA
..2	M0045	BN96-02984E	ASSY ACCESSORY;LNS2641DX/XAA,SONOMA	1	SA
...3	T0268	3903-000144	CBF-POWER CORD;DT,US,BP3/Y,U(IEC C13-RA)	1	SA
...3	T0524	6902-000110	BAG PE;LDPE,T0.05,W250,L400,TRP,28,2	2	SNA
...3	ACCESSORY	AA68-00371C	CARD WARRANTY-04;,SEA,W/P100(G),1 YEAR	1	SNA
...3	ACCESSORY	AA68-00682C	CARD WARRANTY-05;PDP,W/P120(G),SECA,B5,B	1	SNA
...3	ACCESSORY	AA68-03242F	MANUAL FLYER-01,SAFETY GUIDE;All Model,S	1	SNA
...3	MP1.0	AA68-40065B	CARD-01,REGISTRATION;,SEA,A5,ENG,A/P220,	1	SNA
...3	T0074	BN59-00511A	REMOCON;Bordeaux,TM87B,SAMSUNG 28P+EEPRO	1	SA
...3	T0531	BN63-02415A	COVER-BOTTOM;SONOMA 32,HIPS,V0,BK500	1	SNA
...3	T0238	BN68-00832C	MANUAL FLYER-REGISTRATION CARD;SECA all,	1	SNA
...3	T0238	BN68-00832D	MANUAL FLYER-REGISTRATION CARD;SECA all,	1	SNA
...3	M0156	BN68-01001A	MANUAL USERS-01;COMM,SAMSUNG,3Langs,N.Am	1	SNA
...3	ACCESSORY	BN68-01003A	MANUAL FLYER-QSG(01);COMM,SAMSUNG,Englis	1	SNA
...3	ACCESSORY	BN69-01086A	BOX ACCESSORY-00;COMM,SW1,YEL,-,W573,D63	1	SNA
...3	M0045	BN96-01800A	ASSY ACCESSORY;ROME32,SCREW	1	SA
....4	T0081	6002-001294	SCREW-TAPPING;BH,+,,M4,L16,ZPC(BLK)	4	SA
....4	ACCESSORY	6902-000128	BAG ZIPPER;LDPE,T0.05,W200,L150,TRP,8,2-	1	SNA
1	M0003	BN92-01701A	ASSY BOX;26T70,UO,SONOMA	1	SNA
..2		BN69-01324A	BOX-01,SET;26T7,SY-05,A,YEL,A1,W833,D633	1.02	SNA
1	M0113	BN92-01704A	ASSY P/MATERIAL;26T70,SONOMA	1	SNA
..2	T0376	6902-000061	BAG AIR;LDPE,T0.2,L1000,W500,TRP,,,	0.016	SNA
..2	T0524	6902-000358	BAG PE;HDPE/NITRON(DOUBLE),T0.02/T0.5,W9	1	SNA
..2	T0376	6902-000379	BAG AIR;LDPE,T0.2,W1000,L1800,TRP,-,--	0.005	SNA
..2	T0081	6902-000604	BAG WRAPPING;LDPE,T0.02,W500,L10000,TRP,	3.66	SNA
1	M0017	BN91-01054C	ASSY CHASSIS-AMZ;LNS2641DX/XAA,AUO	1	SNA
..2	M0014	BN94-00963C	ASSY PCB MAIN-AMZ;LNS2641DX/XAA,AM LCD	1	SNA
...3	T0245	0202-001522	SOLDER-WIRE FLUX;LFA3-107,-,D1.2,96.5Sn/	0.25	SNA
...3	JA801	3701-001294	CONNECTOR-DSUB;15P,3R,FEMALE,STRAIGHT,AU	1	SA
...3	CN201	3711-004236	HEADER-BOARD TO CABLE;BOX,6P,1R,2MM,STRA	1	SA
...3	CN1001	3711-004484	HEADER-BOARD TO CABLE;BOX,5P,1R,2mm,STRA	1	SA
...3	CN901	3711-004484	HEADER-BOARD TO CABLE;BOX,5P,1R,2mm,STRA	1	SA
...3	CN1003	3711-005884	HEADER-BOARD TO BOARD;BOX,30P,2R,2mm,ANG	1	SA
...3	CN102	3711-005942	HEADER-BOARD TO CABLE;BOX,16P,1R,2mm,STR	1	SA
...3	JA701	3722-001061	JACK-PHONE;1P,3.6PI,AG,BLK,N	1	SA
...3	JA702	3722-001061	JACK-PHONE;1P,3.6PI,AG,BLK,N	1	SA
...3	JA803	3722-001061	JACK-PHONE;1P,3.6PI,AG,BLK,N	1	SA
...3	CN1301	3722-001147	JACK-USB;4P/1C,AU,BLK,STRAIGHT,A TYPE	1	SA
...3	JA604	3722-001734	JACK-VHS;4P,SN,BLK,STRAIGHT	1	SA
...3	JA603	3722-001903	JACK-PIN;2P,-,AU,WHT/RED,-	1	SA
...3	JA605	3722-001903	JACK-PIN;2P,-,AU,WHT/RED,-	1	SA
...3	JA805	3722-001903	JACK-PIN;2P,-,AU,WHT/RED,-	1	SA
...3	JA601	3722-001938	JACK-PIN;3P,-,AU,GRN/BLU/RED,-	1	SA
...3	JA602	3722-002063	JACK-PIN;3P,AU,YEL/WHT/RED,STRAIGHT	1	SA
...3	CIS3	BN40-00081A	TUNER;DNVS303HH261A,DNVS303HH261A,VSB/QA	1	SA
...3	T0253	BN59-00498A	MODULE-SPLITTER;UMX-NT-059,UMX-NT-059,2i	1	SA
...3	T0852	BN96-01470A	ASSY BOARD P-OPTICAL;HP-P5581,OPTICAL	1	SA
....4	CN906	3707-001067	CONNECTOR-OPTICAL;PLUG,SM,-,4.4/2.0mm	1	SA
...3	T0120	BN97-00964C	ASSY SMD-AM LCD;LNS2641DX/XAA	1	SNA
....4	CIS05	0202-001477	SOLDER-CREAM;LST309-M,-,D20~45§-,96.5Sn/	4.902	SNA

Level	Loc. No.	Code No.	Description & Specification	Q'ty	SA/SNA
....4	D501	0401-001056	DIODE-SWITCHING;MMBD4148SE,100V,200mA,SO	1	SA
....4	D708	0401-001056	DIODE-SWITCHING;MMBD4148SE,100V,200mA,SO	1	SA
....4	D709	0401-001056	DIODE-SWITCHING;MMBD4148SE,100V,200mA,SO	1	SA
....4	D710	0401-001056	DIODE-SWITCHING;MMBD4148SE,100V,200mA,SO	1	SA
....4	D711	0401-001056	DIODE-SWITCHING;MMBD4148SE,100V,200mA,SO	1	SA
....4	D712	0401-001056	DIODE-SWITCHING;MMBD4148SE,100V,200mA,SO	1	SA
....4	D713	0401-001056	DIODE-SWITCHING;MMBD4148SE,100V,200mA,SO	1	SA
....4	D801	0401-001056	DIODE-SWITCHING;MMBD4148SE,100V,200mA,SO	1	SA
....4	D802	0401-001056	DIODE-SWITCHING;MMBD4148SE,100V,200mA,SO	1	SA
....4	D803	0401-001056	DIODE-SWITCHING;MMBD4148SE,100V,200mA,SO	1	SA
....4	D813	0401-001056	DIODE-SWITCHING;MMBD4148SE,100V,200mA,SO	1	SA
....4	D814	0401-001056	DIODE-SWITCHING;MMBD4148SE,100V,200mA,SO	1	SA
....4	D815	0401-001056	DIODE-SWITCHING;MMBD4148SE,100V,200mA,SO	1	SA
....4	D816	0401-001056	DIODE-SWITCHING;MMBD4148SE,100V,200mA,SO	1	SA
....4	D817	0401-001056	DIODE-SWITCHING;MMBD4148SE,100V,200mA,SO	1	SA
....4	D818	0401-001056	DIODE-SWITCHING;MMBD4148SE,100V,200mA,SO	1	SA
....4	D819	0401-001056	DIODE-SWITCHING;MMBD4148SE,100V,200mA,SO	1	SA
....4	D820	0401-001056	DIODE-SWITCHING;MMBD4148SE,100V,200mA,SO	1	SA
....4	D831	0401-001056	DIODE-SWITCHING;MMBD4148SE,100V,200mA,SO	1	SA
....4	D832	0401-001056	DIODE-SWITCHING;MMBD4148SE,100V,200mA,SO	1	SA
....4	D833	0401-001056	DIODE-SWITCHING;MMBD4148SE,100V,200mA,SO	1	SA
....4	D834	0401-001056	DIODE-SWITCHING;MMBD4148SE,100V,200mA,SO	1	SA
....4	D835	0401-001056	DIODE-SWITCHING;MMBD4148SE,100V,200mA,SO	1	SA
....4	D836	0401-001056	DIODE-SWITCHING;MMBD4148SE,100V,200mA,SO	1	SA
....4	D837	0401-001056	DIODE-SWITCHING;MMBD4148SE,100V,200mA,SO	1	SA
....4	D838	0401-001056	DIODE-SWITCHING;MMBD4148SE,100V,200mA,SO	1	SA
....4	D101	0402-000553	DIODE-SCHOTTKY;"SS24,B240",40V,2000mA,DO	1	SA
....4	D102	0402-000553	DIODE-SCHOTTKY;"SS24,B240",40V,2000mA,DO	1	SA
....4	D1301	0403-000620	DIODE-ZENER;RLZ5.6B,5.45-5.73V,500mW,LL-	1	SA
....4	D1302	0403-000620	DIODE-ZENER;RLZ5.6B,5.45-5.73V,500mW,LL-	1	SA
....4	D206	0403-000620	DIODE-ZENER;RLZ5.6B,5.45-5.73V,500mW,LL-	1	SA
....4	D821	0403-000620	DIODE-ZENER;RLZ5.6B,5.45-5.73V,500mW,LL-	1	SA
....4	D822	0403-000620	DIODE-ZENER;RLZ5.6B,5.45-5.73V,500mW,LL-	1	SA
....4	D839	0403-000620	DIODE-ZENER;RLZ5.6B,5.45-5.73V,500mW,LL-	1	SA
....4	D840	0403-000620	DIODE-ZENER;RLZ5.6B,5.45-5.73V,500mW,LL-	1	SA
....4	D901	0403-000620	DIODE-ZENER;RLZ5.6B,5.45-5.73V,500mW,LL-	1	SA
....4	D902	0403-000620	DIODE-ZENER;RLZ5.6B,5.45-5.73V,500mW,LL-	1	SA
....4	D903	0403-000620	DIODE-ZENER;RLZ5.6B,5.45-5.73V,500mW,LL-	1	SA
....4	D904	0403-000620	DIODE-ZENER;RLZ5.6B,5.45-5.73V,500mW,LL-	1	SA
....4	D905	0403-000620	DIODE-ZENER;RLZ5.6B,5.45-5.73V,500mW,LL-	1	SA
....4	D906	0403-000620	DIODE-ZENER;RLZ5.6B,5.45-5.73V,500mW,LL-	1	SA
....4	D907	0403-000620	DIODE-ZENER;RLZ5.6B,5.45-5.73V,500mW,LL-	1	SA
....4	D908	0403-000620	DIODE-ZENER;RLZ5.6B,5.45-5.73V,500mW,LL-	1	SA
....4	D909	0403-000620	DIODE-ZENER;RLZ5.6B,5.45-5.73V,500mW,LL-	1	SA
....4	D910	0403-000620	DIODE-ZENER;RLZ5.6B,5.45-5.73V,500mW,LL-	1	SA
....4	D911	0403-000620	DIODE-ZENER;RLZ5.6B,5.45-5.73V,500mW,LL-	1	SA
....4	D912	0403-000620	DIODE-ZENER;RLZ5.6B,5.45-5.73V,500mW,LL-	1	SA
....4	D205	0403-001016	DIODE-ZENER;RLZ6.2B,5.96-6.27V,500mW,LL-	1	SA
....4	D804	0403-001016	DIODE-ZENER;RLZ6.2B,5.96-6.27V,500mW,LL-	1	SA
....4	D827	0403-001016	DIODE-ZENER;RLZ6.2B,5.96-6.27V,500mW,LL-	1	SA
....4	D601	0403-001052	DIODE-ZENER;RD8.2MB,7.7-8.7V,200mW,SOT-2	1	SA
....4	D602	0403-001052	DIODE-ZENER;RD8.2MB,7.7-8.7V,200mW,SOT-2	1	SA
....4	D603	0403-001052	DIODE-ZENER;RD8.2MB,7.7-8.7V,200mW,SOT-2	1	SA
....4	D604	0403-001052	DIODE-ZENER;RD8.2MB,7.7-8.7V,200mW,SOT-2	1	SA
....4	D605	0403-001052	DIODE-ZENER;RD8.2MB,7.7-8.7V,200mW,SOT-2	1	SA
....4	D606	0403-001052	DIODE-ZENER;RD8.2MB,7.7-8.7V,200mW,SOT-2	1	SA
....4	D607	0403-001052	DIODE-ZENER;RD8.2MB,7.7-8.7V,200mW,SOT-2	1	SA
....4	D608	0403-001052	DIODE-ZENER;RD8.2MB,7.7-8.7V,200mW,SOT-2	1	SA
....4	D609	0403-001052	DIODE-ZENER;RD8.2MB,7.7-8.7V,200mW,SOT-2	1	SA
....4	D610	0403-001052	DIODE-ZENER;RD8.2MB,7.7-8.7V,200mW,SOT-2	1	SA
....4	D611	0403-001052	DIODE-ZENER;RD8.2MB,7.7-8.7V,200mW,SOT-2	1	SA
....4	D612	0403-001052	DIODE-ZENER;RD8.2MB,7.7-8.7V,200mW,SOT-2	1	SA
....4	D613	0403-001052	DIODE-ZENER;RD8.2MB,7.7-8.7V,200mW,SOT-2	1	SA
....4	D614	0403-001052	DIODE-ZENER;RD8.2MB,7.7-8.7V,200mW,SOT-2	1	SA
....4	D615	0403-001052	DIODE-ZENER;RD8.2MB,7.7-8.7V,200mW,SOT-2	1	SA
....4	D616	0403-001052	DIODE-ZENER;RD8.2MB,7.7-8.7V,200mW,SOT-2	1	SA
....4	D617	0403-001052	DIODE-ZENER;RD8.2MB,7.7-8.7V,200mW,SOT-2	1	SA
....4	D618	0403-001052	DIODE-ZENER;RD8.2MB,7.7-8.7V,200mW,SOT-2	1	SA
....4	D619	0403-001052	DIODE-ZENER;RD8.2MB,7.7-8.7V,200mW,SOT-2	1	SA
....4	D620	0403-001052	DIODE-ZENER;RD8.2MB,7.7-8.7V,200mW,SOT-2	1	SA
....4	D621	0403-001052	DIODE-ZENER;RD8.2MB,7.7-8.7V,200mW,SOT-2	1	SA
....4	D622	0403-001052	DIODE-ZENER;RD8.2MB,7.7-8.7V,200mW,SOT-2	1	SA

Level	Loc. No.	Code No.	Description & Specification	Q'ty	SA/SNA
....4	D623	0403-001052	DIODE-ZENER;RD8.2MB,7.7-8.7V,200mW,SOT-2	1	SA
....4	D624	0403-001052	DIODE-ZENER;RD8.2MB,7.7-8.7V,200mW,SOT-2	1	SA
....4	D625	0403-001052	DIODE-ZENER;RD8.2MB,7.7-8.7V,200mW,SOT-2	1	SA
....4	D626	0403-001052	DIODE-ZENER;RD8.2MB,7.7-8.7V,200mW,SOT-2	1	SA
....4	D627	0403-001052	DIODE-ZENER;RD8.2MB,7.7-8.7V,200mW,SOT-2	1	SA
....4	D703	0403-001052	DIODE-ZENER;RD8.2MB,7.7-8.7V,200mW,SOT-2	1	SA
....4	D704	0403-001052	DIODE-ZENER;RD8.2MB,7.7-8.7V,200mW,SOT-2	1	SA
....4	D705	0403-001052	DIODE-ZENER;RD8.2MB,7.7-8.7V,200mW,SOT-2	1	SA
....4	D706	0403-001052	DIODE-ZENER;RD8.2MB,7.7-8.7V,200mW,SOT-2	1	SA
....4	D707	0403-001052	DIODE-ZENER;RD8.2MB,7.7-8.7V,200mW,SOT-2	1	SA
....4	D805	0403-001052	DIODE-ZENER;RD8.2MB,7.7-8.7V,200mW,SOT-2	1	SA
....4	D806	0403-001052	DIODE-ZENER;RD8.2MB,7.7-8.7V,200mW,SOT-2	1	SA
....4	D807	0403-001052	DIODE-ZENER;RD8.2MB,7.7-8.7V,200mW,SOT-2	1	SA
....4	D808	0403-001052	DIODE-ZENER;RD8.2MB,7.7-8.7V,200mW,SOT-2	1	SA
....4	D809	0403-001052	DIODE-ZENER;RD8.2MB,7.7-8.7V,200mW,SOT-2	1	SA
....4	D810	0403-001052	DIODE-ZENER;RD8.2MB,7.7-8.7V,200mW,SOT-2	1	SA
....4	D811	0403-001052	DIODE-ZENER;RD8.2MB,7.7-8.7V,200mW,SOT-2	1	SA
....4	D812	0403-001052	DIODE-ZENER;RD8.2MB,7.7-8.7V,200mW,SOT-2	1	SA
....4	D823	0403-001052	DIODE-ZENER;RD8.2MB,7.7-8.7V,200mW,SOT-2	1	SA
....4	D824	0403-001052	DIODE-ZENER;RD8.2MB,7.7-8.7V,200mW,SOT-2	1	SA
....4	D825	0403-001052	DIODE-ZENER;RD8.2MB,7.7-8.7V,200mW,SOT-2	1	SA
....4	D826	0403-001052	DIODE-ZENER;RD8.2MB,7.7-8.7V,200mW,SOT-2	1	SA
....4	D828	0403-001052	DIODE-ZENER;RD8.2MB,7.7-8.7V,200mW,SOT-2	1	SA
....4	D829	0403-001052	DIODE-ZENER;RD8.2MB,7.7-8.7V,200mW,SOT-2	1	SA
....4	D830	0403-001052	DIODE-ZENER;RD8.2MB,7.7-8.7V,200mW,SOT-2	1	SA
....4	D841	0403-001052	DIODE-ZENER;RD8.2MB,7.7-8.7V,200mW,SOT-2	1	SA
....4	D842	0403-001052	DIODE-ZENER;RD8.2MB,7.7-8.7V,200mW,SOT-2	1	SA
....4	D843	0403-001052	DIODE-ZENER;RD8.2MB,7.7-8.7V,200mW,SOT-2	1	SA
....4	D844	0403-001052	DIODE-ZENER;RD8.2MB,7.7-8.7V,200mW,SOT-2	1	SA
....4	D503	0403-001425	DIODE-ZENER;BZX84C33,31-35V,350mW,SOT-23	1	SA
....4	D701	0406-001172	DIODE-TVS;CDS3C30GTH,48V,0W,SMD	1	SA
....4	D702	0406-001172	DIODE-TVS;CDS3C30GTH,48V,0W,SMD	1	SA
....4	D201	0407-000123	DIODE-ARRAY;DAN202K,80V,100mA,CA2-3,SOT-	1	SA
....4	D202	0407-000123	DIODE-ARRAY;DAN202K,80V,100mA,CA2-3,SOT-	1	SA
....4	D203	0407-000123	DIODE-ARRAY;DAN202K,80V,100mA,CA2-3,SOT-	1	SA
....4	D204	0407-000123	DIODE-ARRAY;DAN202K,80V,100mA,CA2-3,SOT-	1	SA
....4	D301	0407-000123	DIODE-ARRAY;DAN202K,80V,100mA,CA2-3,SOT-	1	SA
....4	D302	0407-000123	DIODE-ARRAY;DAN202K,80V,100mA,CA2-3,SOT-	1	SA
....4	D401	0407-000123	DIODE-ARRAY;DAN202K,80V,100mA,CA2-3,SOT-	1	SA
....4	D402	0407-000123	DIODE-ARRAY;DAN202K,80V,100mA,CA2-3,SOT-	1	SA
....4	D403	0407-000123	DIODE-ARRAY;DAN202K,80V,100mA,CA2-3,SOT-	1	SA
....4	Q401	0501-000002	TR-SMALL SIGNAL;KSA812,PNP,150MW,SOT-23,	1	SA
....4	Q303	0501-000280	TR-SMALL SIGNAL;KSA1182,PNP,150MW,SOT-23	1	SA
....4	Q1304	0501-000342	TR-SMALL SIGNAL;KSC1623-Y,NPN,200mW,SOT-	1	SA
....4	Q202	0501-000342	TR-SMALL SIGNAL;KSC1623-Y,NPN,200mW,SOT-	1	SA
....4	Q204	0501-000342	TR-SMALL SIGNAL;KSC1623-Y,NPN,200mW,SOT-	1	SA
....4	Q205	0501-000342	TR-SMALL SIGNAL;KSC1623-Y,NPN,200mW,SOT-	1	SA
....4	Q301	0501-000342	TR-SMALL SIGNAL;KSC1623-Y,NPN,200mW,SOT-	1	SA
....4	Q302	0501-000342	TR-SMALL SIGNAL;KSC1623-Y,NPN,200mW,SOT-	1	SA
....4	Q404	0501-000342	TR-SMALL SIGNAL;KSC1623-Y,NPN,200mW,SOT-	1	SA
....4	Q502	0501-000342	TR-SMALL SIGNAL;KSC1623-Y,NPN,200mW,SOT-	1	SA
....4	Q501	0501-000344	TR-SMALL SIGNAL;KSC1623-G,NPN,200mW,SOT-	1	SA
....4	Q101	0501-002080	TR-SMALL SIGNAL;2SC2412K,NPN,200mW,SC-59	1	SA
....4	Q102	0501-002080	TR-SMALL SIGNAL;2SC2412K,NPN,200mW,SC-59	1	SA
....4	Q201	0501-002080	TR-SMALL SIGNAL;2SC2412K,NPN,200mW,SC-59	1	SA
....4	Q402	0501-002080	TR-SMALL SIGNAL;2SC2412K,NPN,200mW,SC-59	1	SA
....4	Q403	0501-002080	TR-SMALL SIGNAL;2SC2412K,NPN,200mW,SC-59	1	SA
....4	Q503	0501-002080	TR-SMALL SIGNAL;2SC2412K,NPN,200mW,SC-59	1	SA
....4	Q701	0501-002080	TR-SMALL SIGNAL;2SC2412K,NPN,200mW,SC-59	1	SA
....4	Q801	0501-002080	TR-SMALL SIGNAL;2SC2412K,NPN,200mW,SC-59	1	SA
....4	Q1305	0504-001129	TR-DIGITAL;KRC104S-I,NPN,200MW,47K/47K,S	1	SA
....4	Q409	0505-000110	FET-SILICON;2N7002,N,60V,115mA,7.5ohm,0.	1	SA
....4	Q409	0505-000110	FET-SILICON;2N7002,N,60V,115mA,7.5ohm,0.	1	SA
....4	Q409	0505-000110	FET-SILICON;2N7002,N,60V,115mA,7.5ohm,0.	1	SA
....4	Q409	0505-000110	FET-SILICON;2N7002,N,60V,115mA,7.5ohm,0.	1	SA
....4	Q409	0505-000110	FET-SILICON;2N7002,N,60V,115mA,7.5ohm,0.	1	SA
....4	Q409	0505-001170	FET-SILICON;SI9933ADY-T1,P,-20V,3.4A,0.0	1	SA
....4	IC104	0801-002095	IC-CMOS LOGIC;74LCX245,TRANSCEIVER,TSSOP	1	SA
....4	IC104	0801-002095	IC-CMOS LOGIC;74LCX245,TRANSCEIVER,TSSOP	1	SA
....4	IC104	0801-002095	IC-CMOS LOGIC;74LCX245,TRANSCEIVER,TSSOP	1	SA
....4	IC104	0801-002267	IC-CMOS LOGIC;74LCX14,-,SOIC,14P,150MIL,	1	SA
....4	IC104	0801-002633	IC-CMOS LOGIC;NC7WBD3125,2BIT BUS SWITCH	1	SA

Level	Loc. No.	Code No.	Description & Specification	Q'ty	SA/SNA
....4	IC104	0801-002716	IC-CMOS LOGIC;74LCX157,MULTIPLEXER,SOIC,	1	SA
....4	IC301	1001-000164	IC-ANALOG MULTIPLEX;74HC4052,CMOS,SOP,16	1	SA
....4	IC202	1001-001109	IC-ANALOG SWITCH;FST3125M,BUS SWITCH & C	1	SA
....4	IC806	1001-001109	IC-ANALOG SWITCH;FST3125M,BUS SWITCH & C	1	SA
....4	IC106	1001-001363	IC-VIDEO SWITCH;PI3HDMI412FT,HDMI TMDS S	1	SA
....4	IC107	1002-001399	IC-D/A CONVERTER;PCM1754,24BIT,SSOP,16P,	1	SA
....4	IC701	1006-001266	IC-LINE TRANSCEIVER;SP3232EEY,TSSOP,16P,	1	SA
....4	IC112	1103-000129	IC-EEPROM;24C02,2Kbit,256x8Bit,SOP,8P,5x	1	SA
....4	IC112	1103-000129	IC-EEPROM;24C02,2Kbit,256x8Bit,SOP,8P,5x	1	SA
....4	IC112	1103-000129	IC-EEPROM;24C02,2Kbit,256x8Bit,SOP,8P,5x	1	SA
....4	IC112	1103-001147	IC-EEPROM;24256,256Kbit,32Kx8Bit,SOP,8P,	1	SA
....4	IC1202	1105-001538	IC-VIDEO RAM;K4D263238,-,128M,4x1Mx32Bit	1	SA
....4	IC113	1105-001571	IC-DRAM;K4D551638F,4Mx16x4Bit,TSOP(II),6	1	SA
....4	IC113	1105-001571	IC-DRAM;K4D551638F,4Mx16x4Bit,TSOP(II),6	1	SA
....4	DU410	1201-000166	IC-OP AMP;LM358,SOP,ST,8P,150MIL,DUAL,10	1	SA
....4	DU410	1201-000541	IC-OP AMP;062,SOP,8P,153MIL,DUAL,6V/mV,P	1	SA
....4	T0085	1201-002136	IC-AUDIO AMP;LM4810,MSOP,8P,3x3mm,DUAL,-	1	SA
....4	T0085	1201-002246	IC-AUDIO AMP;STA323W,SO,36P,15.9x11mm,-,	1	SA
....4	T0087	1203-001488	IC-POSI.FIXED REG.;7805,T0-252,3P,-,PLAS	1	SA
....4	IC206	1203-001559	IC-RESET;DS1834A,SOIC,8P,150MIL,PLASTIC,	1	SA
....4	T0087	1203-001815	IC-POSI.FIXED REG.;78M09,TO-252,3P,-,PLA	1	SA
....4	T0087	1203-001816	IC-POSI.FIXED REG.;78M08,TO-252,3P,-,PLA	1	SA
....4	IC402	1203-001824	IC-VOL. DETECTOR;7042,SOT-89,3P,-,PLASTI	1	SA
....4	T0087	1203-002699	IC-POSI.FIXED REG.;78D05,DPAK,3P,6.6X6.1	1	SA
....4	T0087	1203-002842	IC-POSI.FIXED REG.;AP1117D-33A,TO-252,3P	1	SA
....4	T0087	1203-002844	IC-POSI.FIXED REG.;AP1117D-18A,TO-252-3L	1	SA
....4	T0087	1203-002844	IC-POSI.FIXED REG.;AP1117D-18A,TO-252-3L	1	SA
....4	T0087	1203-002844	IC-POSI.FIXED REG.;AP1117D-18A,TO-252-3L	1	SA
....4	T0087	1203-002974	IC-POSI.FIXED REG.;AP1117D-25A,TO-252,3P	1	SA
....4	T0087	1203-002974	IC-POSI.FIXED REG.;AP1117D-25A,TO-252,3P	1	SA
....4	IC012	1203-002995	IC-POSI.ADJUST REG.;AP1117D-A,TO-252,3P,	1	SA
....4	T0170	1203-003059	IC-SWITCH VOL. REG.;MP1583,SOIC,8P,4.9x3	1	SA
....4	T0170	1203-003059	IC-SWITCH VOL. REG.;MP1583,SOIC,8P,4.9x3	1	SA
....4	T0087	1203-003561	IC-POSI.FIXED REG.;NCP551SN15T1G,TSOP-5,	1	SA
....4	T0087	1203-003697	IC-POSI.FIXED REG.;SC1566I5M-2.5TRT,TO-2	1	SA
....4	T0087	1203-003697	IC-POSI.FIXED REG.;SC1566I5M-2.5TRT,TO-2	1	SA
....4	IC302	1204-002471	IC-AUDIO PROCESSOR;STV8258DSX,TQFP,80P,1	1	SA
....4	IC118	1204-002496	IC-VIDEO PROCESS;S4LD158X01,QFP,128P,14x	1	SNA
....4	IC118	1204-002503	IC-VIDEO PROCESS;SVP-PX56-7256,PQFP,256P	1	SNA
....4	IC1301	1204-002534	IC-DECODER;S5H2111,BGA,416P,27x27mm,PLAS	1	SA
....4	IC1302	1205-002250	IC-CLOCK GENERATOR;CY24204-3,TSSOP,16P,1	1	SA
....4	R1519	2007-000040	R-CHIP;150ohm,1%,1/10W,TP,1608	1	SA
....4	R1520	2007-000040	R-CHIP;150ohm,1%,1/10W,TP,1608	1	SA
....4	R1201	2007-000043	R-CHIP;1Kohm,1%,1/10W,TP,1608	1	SA
....4	R1202	2007-000043	R-CHIP;1Kohm,1%,1/10W,TP,1608	1	SA
....4	R1008	2007-000052	R-CHIP;10Kohm,1%,1/10W,TP,1608	1	SA
....4	R228	2007-000052	R-CHIP;10Kohm,1%,1/10W,TP,1608	1	SA
....4	R270	2007-000052	R-CHIP;10Kohm,1%,1/10W,TP,1608	1	SA
....4	R275	2007-000052	R-CHIP;10Kohm,1%,1/10W,TP,1608	1	SA
....4	R501	2007-000060	R-CHIP;100Kohm,1%,1/10W,TP,1608	1	SA
....4	R503	2007-000060	R-CHIP;100Kohm,1%,1/10W,TP,1608	1	SA
....4	R1105	2007-000067	R-CHIP;15Kohm,1%,1/10W,TP,1608	1	SA
....4	R1001	2007-000070	R-CHIP;0ohm,5%,1/10W,TP,1608	1	SA
....4	R1010	2007-000070	R-CHIP;0ohm,5%,1/10W,TP,1608	1	SA
....4	R1011	2007-000070	R-CHIP;0ohm,5%,1/10W,TP,1608	1	SA
....4	R1012	2007-000070	R-CHIP;0ohm,5%,1/10W,TP,1608	1	SA
....4	R1013	2007-000070	R-CHIP;0ohm,5%,1/10W,TP,1608	1	SA
....4	R1014	2007-000070	R-CHIP;0ohm,5%,1/10W,TP,1608	1	SA
....4	R1015	2007-000070	R-CHIP;0ohm,5%,1/10W,TP,1608	1	SA
....4	R1016	2007-000070	R-CHIP;0ohm,5%,1/10W,TP,1608	1	SA
....4	R1017	2007-000070	R-CHIP;0ohm,5%,1/10W,TP,1608	1	SA
....4	R1018	2007-000070	R-CHIP;0ohm,5%,1/10W,TP,1608	1	SA
....4	R1020	2007-000070	R-CHIP;0ohm,5%,1/10W,TP,1608	1	SA
....4	R1021	2007-000070	R-CHIP;0ohm,5%,1/10W,TP,1608	1	SA
....4	R1022	2007-000070	R-CHIP;0ohm,5%,1/10W,TP,1608	1	SA
....4	R1023	2007-000070	R-CHIP;0ohm,5%,1/10W,TP,1608	1	SA
....4	R1024	2007-000070	R-CHIP;0ohm,5%,1/10W,TP,1608	1	SA
....4	R1025	2007-000070	R-CHIP;0ohm,5%,1/10W,TP,1608	1	SA
....4	R1026	2007-000070	R-CHIP;0ohm,5%,1/10W,TP,1608	1	SA
....4	R1027	2007-000070	R-CHIP;0ohm,5%,1/10W,TP,1608	1	SA
....4	R1028	2007-000070	R-CHIP;0ohm,5%,1/10W,TP,1608	1	SA
....4	R1029	2007-000070	R-CHIP;0ohm,5%,1/10W,TP,1608	1	SA

Level	Loc. No.	Code No.	Description & Specification	Q'ty	SA/SNA
....4	R1030	2007-000070	R-CHIP;0ohm,5%,1/10W,TP,1608	1	SA
....4	R1031	2007-000070	R-CHIP;0ohm,5%,1/10W,TP,1608	1	SA
....4	R1032	2007-000070	R-CHIP;0ohm,5%,1/10W,TP,1608	1	SA
....4	R1033	2007-000070	R-CHIP;0ohm,5%,1/10W,TP,1608	1	SA
....4	R1038	2007-000070	R-CHIP;0ohm,5%,1/10W,TP,1608	1	SA
....4	R1055P	2007-000070	R-CHIP;0ohm,5%,1/10W,TP,1608	1	SA
....4	R1304	2007-000070	R-CHIP;0ohm,5%,1/10W,TP,1608	1	SA
....4	R1326	2007-000070	R-CHIP;0ohm,5%,1/10W,TP,1608	1	SA
....4	R1329	2007-000070	R-CHIP;0ohm,5%,1/10W,TP,1608	1	SA
....4	R1343	2007-000070	R-CHIP;0ohm,5%,1/10W,TP,1608	1	SA
....4	R1345	2007-000070	R-CHIP;0ohm,5%,1/10W,TP,1608	1	SA
....4	R1353	2007-000070	R-CHIP;0ohm,5%,1/10W,TP,1608	1	SA
....4	R1355	2007-000070	R-CHIP;0ohm,5%,1/10W,TP,1608	1	SA
....4	R1357	2007-000070	R-CHIP;0ohm,5%,1/10W,TP,1608	1	SA
....4	R1359	2007-000070	R-CHIP;0ohm,5%,1/10W,TP,1608	1	SA
....4	R1601	2007-000070	R-CHIP;0ohm,5%,1/10W,TP,1608	1	SA
....4	R1602	2007-000070	R-CHIP;0ohm,5%,1/10W,TP,1608	1	SA
....4	R1603	2007-000070	R-CHIP;0ohm,5%,1/10W,TP,1608	1	SA
....4	R1604	2007-000070	R-CHIP;0ohm,5%,1/10W,TP,1608	1	SA
....4	R1619	2007-000070	R-CHIP;0ohm,5%,1/10W,TP,1608	1	SA
....4	R1620	2007-000070	R-CHIP;0ohm,5%,1/10W,TP,1608	1	SA
....4	R1621	2007-000070	R-CHIP;0ohm,5%,1/10W,TP,1608	1	SA
....4	R1627	2007-000070	R-CHIP;0ohm,5%,1/10W,TP,1608	1	SA
....4	R1701	2007-000070	R-CHIP;0ohm,5%,1/10W,TP,1608	1	SA
....4	R235	2007-000070	R-CHIP;0ohm,5%,1/10W,TP,1608	1	SA
....4	R237	2007-000070	R-CHIP;0ohm,5%,1/10W,TP,1608	1	SA
....4	R246	2007-000070	R-CHIP;0ohm,5%,1/10W,TP,1608	1	SA
....4	R247	2007-000070	R-CHIP;0ohm,5%,1/10W,TP,1608	1	SA
....4	R248	2007-000070	R-CHIP;0ohm,5%,1/10W,TP,1608	1	SA
....4	R249	2007-000070	R-CHIP;0ohm,5%,1/10W,TP,1608	1	SA
....4	R259	2007-000070	R-CHIP;0ohm,5%,1/10W,TP,1608	1	SA
....4	R261	2007-000070	R-CHIP;0ohm,5%,1/10W,TP,1608	1	SA
....4	R262	2007-000070	R-CHIP;0ohm,5%,1/10W,TP,1608	1	SA
....4	R272	2007-000070	R-CHIP;0ohm,5%,1/10W,TP,1608	1	SA
....4	R329	2007-000070	R-CHIP;0ohm,5%,1/10W,TP,1608	1	SA
....4	R405	2007-000070	R-CHIP;0ohm,5%,1/10W,TP,1608	1	SA
....4	R406	2007-000070	R-CHIP;0ohm,5%,1/10W,TP,1608	1	SA
....4	R506	2007-000070	R-CHIP;0ohm,5%,1/10W,TP,1608	1	SA
....4	R507	2007-000070	R-CHIP;0ohm,5%,1/10W,TP,1608	1	SA
....4	R509	2007-000070	R-CHIP;0ohm,5%,1/10W,TP,1608	1	SA
....4	R511	2007-000070	R-CHIP;0ohm,5%,1/10W,TP,1608	1	SA
....4	R521	2007-000070	R-CHIP;0ohm,5%,1/10W,TP,1608	1	SA
....4	R522	2007-000070	R-CHIP;0ohm,5%,1/10W,TP,1608	1	SA
....4	R701	2007-000070	R-CHIP;0ohm,5%,1/10W,TP,1608	1	SA
....4	R702	2007-000070	R-CHIP;0ohm,5%,1/10W,TP,1608	1	SA
....4	R807	2007-000070	R-CHIP;0ohm,5%,1/10W,TP,1608	1	SA
....4	R835	2007-000070	R-CHIP;0ohm,5%,1/10W,TP,1608	1	SA
....4	R909	2007-000070	R-CHIP;0ohm,5%,1/10W,TP,1608	1	SA
....4	R922	2007-000070	R-CHIP;0ohm,5%,1/10W,TP,1608	1	SA
....4	R923	2007-000070	R-CHIP;0ohm,5%,1/10W,TP,1608	1	SA
....4	R925	2007-000070	R-CHIP;0ohm,5%,1/10W,TP,1608	1	SA
....4	R929	2007-000070	R-CHIP;0ohm,5%,1/10W,TP,1608	1	SA
....4	R930	2007-000070	R-CHIP;0ohm,5%,1/10W,TP,1608	1	SA
....4	R933	2007-000070	R-CHIP;0ohm,5%,1/10W,TP,1608	1	SA
....4	R935	2007-000070	R-CHIP;0ohm,5%,1/10W,TP,1608	1	SA
....4	R936	2007-000070	R-CHIP;0ohm,5%,1/10W,TP,1608	1	SA
....4	R1040	2007-000071	R-CHIP;22ohm,5%,1/10W,TP,1608	1	SA
....4	R1101	2007-000071	R-CHIP;22ohm,5%,1/10W,TP,1608	1	SA
....4	R1102	2007-000071	R-CHIP;22ohm,5%,1/10W,TP,1608	1	SA
....4	R1204	2007-000071	R-CHIP;22ohm,5%,1/10W,TP,1608	1	SA
....4	R1205	2007-000071	R-CHIP;22ohm,5%,1/10W,TP,1608	1	SA
....4	R1206	2007-000071	R-CHIP;22ohm,5%,1/10W,TP,1608	1	SA
....4	R1207	2007-000071	R-CHIP;22ohm,5%,1/10W,TP,1608	1	SA
....4	R1322	2007-000071	R-CHIP;22ohm,5%,1/10W,TP,1608	1	SA
....4	R1409	2007-000071	R-CHIP;22ohm,5%,1/10W,TP,1608	1	SA
....4	R1410	2007-000071	R-CHIP;22ohm,5%,1/10W,TP,1608	1	SA
....4	R1412	2007-000071	R-CHIP;22ohm,5%,1/10W,TP,1608	1	SA
....4	R1414	2007-000071	R-CHIP;22ohm,5%,1/10W,TP,1608	1	SA
....4	R253	2007-000071	R-CHIP;22ohm,5%,1/10W,TP,1608	1	SA
....4	R323	2007-000071	R-CHIP;22ohm,5%,1/10W,TP,1608	1	SA
....4	R722	2007-000071	R-CHIP;22ohm,5%,1/10W,TP,1608	1	SA
....4	R723	2007-000071	R-CHIP;22ohm,5%,1/10W,TP,1608	1	SA

Level	Loc. No.	Code No.	Description & Specification	Q'ty	SA/SNA
....4	R724	2007-000071	R-CHIP;22ohm,5%,1/10W,TP,1608	1	SA
....4	R810	2007-000071	R-CHIP;22ohm,5%,1/10W,TP,1608	1	SA
....4	R814	2007-000071	R-CHIP;22ohm,5%,1/10W,TP,1608	1	SA
....4	R817	2007-000071	R-CHIP;22ohm,5%,1/10W,TP,1608	1	SA
....4	R822	2007-000071	R-CHIP;22ohm,5%,1/10W,TP,1608	1	SA
....4	R836	2007-000071	R-CHIP;22ohm,5%,1/10W,TP,1608	1	SA
....4	R837	2007-000071	R-CHIP;22ohm,5%,1/10W,TP,1608	1	SA
....4	R874	2007-000071	R-CHIP;22ohm,5%,1/10W,TP,1608	1	SA
....4	R876	2007-000071	R-CHIP;22ohm,5%,1/10W,TP,1608	1	SA
....4	R878	2007-000071	R-CHIP;22ohm,5%,1/10W,TP,1608	1	SA
....4	R879	2007-000071	R-CHIP;22ohm,5%,1/10W,TP,1608	1	SA
....4	R882	2007-000071	R-CHIP;22ohm,5%,1/10W,TP,1608	1	SA
....4	R883	2007-000071	R-CHIP;22ohm,5%,1/10W,TP,1608	1	SA
....4	R884	2007-000071	R-CHIP;22ohm,5%,1/10W,TP,1608	1	SA
....4	R885	2007-000071	R-CHIP;22ohm,5%,1/10W,TP,1608	1	SA
....4	R886	2007-000071	R-CHIP;22ohm,5%,1/10W,TP,1608	1	SA
....4	R887	2007-000071	R-CHIP;22ohm,5%,1/10W,TP,1608	1	SA
....4	R888	2007-000071	R-CHIP;22ohm,5%,1/10W,TP,1608	1	SA
....4	R889	2007-000071	R-CHIP;22ohm,5%,1/10W,TP,1608	1	SA
....4	R890	2007-000071	R-CHIP;22ohm,5%,1/10W,TP,1608	1	SA
....4	R891	2007-000071	R-CHIP;22ohm,5%,1/10W,TP,1608	1	SA
....4	R892	2007-000071	R-CHIP;22ohm,5%,1/10W,TP,1608	1	SA
....4	R893	2007-000071	R-CHIP;22ohm,5%,1/10W,TP,1608	1	SA
....4	R1379	2007-000072	R-CHIP;47ohm,5%,1/10W,TP,1608	1	SA
....4	R1380	2007-000072	R-CHIP;47ohm,5%,1/10W,TP,1608	1	SA
....4	R1413	2007-000072	R-CHIP;47ohm,5%,1/10W,TP,1608	1	SA
....4	R1415	2007-000072	R-CHIP;47ohm,5%,1/10W,TP,1608	1	SA
....4	R1416	2007-000072	R-CHIP;47ohm,5%,1/10W,TP,1608	1	SA
....4	R1417	2007-000072	R-CHIP;47ohm,5%,1/10W,TP,1608	1	SA
....4	R714	2007-000072	R-CHIP;47ohm,5%,1/10W,TP,1608	1	SA
....4	R718	2007-000072	R-CHIP;47ohm,5%,1/10W,TP,1608	1	SA
....4	R803	2007-000072	R-CHIP;47ohm,5%,1/10W,TP,1608	1	SA
....4	R804	2007-000072	R-CHIP;47ohm,5%,1/10W,TP,1608	1	SA
....4	R816	2007-000072	R-CHIP;47ohm,5%,1/10W,TP,1608	1	SA
....4	R818	2007-000072	R-CHIP;47ohm,5%,1/10W,TP,1608	1	SA
....4	R831	2007-000072	R-CHIP;47ohm,5%,1/10W,TP,1608	1	SA
....4	R832	2007-000072	R-CHIP;47ohm,5%,1/10W,TP,1608	1	SA
....4	R1019	2007-000074	R-CHIP;100ohm,5%,1/10W,TP,1608	1	SA
....4	R1034	2007-000074	R-CHIP;100ohm,5%,1/10W,TP,1608	1	SA
....4	R1035	2007-000074	R-CHIP;100ohm,5%,1/10W,TP,1608	1	SA
....4	R1036	2007-000074	R-CHIP;100ohm,5%,1/10W,TP,1608	1	SA
....4	R1037	2007-000074	R-CHIP;100ohm,5%,1/10W,TP,1608	1	SA
....4	R1039	2007-000074	R-CHIP;100ohm,5%,1/10W,TP,1608	1	SA
....4	R1044	2007-000074	R-CHIP;100ohm,5%,1/10W,TP,1608	1	SA
....4	R1050	2007-000074	R-CHIP;100ohm,5%,1/10W,TP,1608	1	SA
....4	R1058	2007-000074	R-CHIP;100ohm,5%,1/10W,TP,1608	1	SA
....4	R1302	2007-000074	R-CHIP;100ohm,5%,1/10W,TP,1608	1	SA
....4	R1303	2007-000074	R-CHIP;100ohm,5%,1/10W,TP,1608	1	SA
....4	R1305	2007-000074	R-CHIP;100ohm,5%,1/10W,TP,1608	1	SA
....4	R1306	2007-000074	R-CHIP;100ohm,5%,1/10W,TP,1608	1	SA
....4	R1307	2007-000074	R-CHIP;100ohm,5%,1/10W,TP,1608	1	SA
....4	R1308	2007-000074	R-CHIP;100ohm,5%,1/10W,TP,1608	1	SA
....4	R1309	2007-000074	R-CHIP;100ohm,5%,1/10W,TP,1608	1	SA
....4	R1310	2007-000074	R-CHIP;100ohm,5%,1/10W,TP,1608	1	SA
....4	R1311	2007-000074	R-CHIP;100ohm,5%,1/10W,TP,1608	1	SA
....4	R1313	2007-000074	R-CHIP;100ohm,5%,1/10W,TP,1608	1	SA
....4	R1314	2007-000074	R-CHIP;100ohm,5%,1/10W,TP,1608	1	SA
....4	R1315	2007-000074	R-CHIP;100ohm,5%,1/10W,TP,1608	1	SA
....4	R1316	2007-000074	R-CHIP;100ohm,5%,1/10W,TP,1608	1	SA
....4	R1317	2007-000074	R-CHIP;100ohm,5%,1/10W,TP,1608	1	SA
....4	R1327	2007-000074	R-CHIP;100ohm,5%,1/10W,TP,1608	1	SA
....4	R1328	2007-000074	R-CHIP;100ohm,5%,1/10W,TP,1608	1	SA
....4	R1330	2007-000074	R-CHIP;100ohm,5%,1/10W,TP,1608	1	SA
....4	R1331	2007-000074	R-CHIP;100ohm,5%,1/10W,TP,1608	1	SA
....4	R1332	2007-000074	R-CHIP;100ohm,5%,1/10W,TP,1608	1	SA
....4	R1333	2007-000074	R-CHIP;100ohm,5%,1/10W,TP,1608	1	SA
....4	R1336	2007-000074	R-CHIP;100ohm,5%,1/10W,TP,1608	1	SA
....4	R1337	2007-000074	R-CHIP;100ohm,5%,1/10W,TP,1608	1	SA
....4	R1338	2007-000074	R-CHIP;100ohm,5%,1/10W,TP,1608	1	SA
....4	R1339	2007-000074	R-CHIP;100ohm,5%,1/10W,TP,1608	1	SA
....4	R1341	2007-000074	R-CHIP;100ohm,5%,1/10W,TP,1608	1	SA
....4	R1342	2007-000074	R-CHIP;100ohm,5%,1/10W,TP,1608	1	SA

Level	Loc. No.	Code No.	Description & Specification	Q'ty	SA/SNA
....4	R1346	2007-000074	R-CHIP;100ohm,5%,1/10W,TP,1608	1	SA
....4	R1347	2007-000074	R-CHIP;100ohm,5%,1/10W,TP,1608	1	SA
....4	R1348	2007-000074	R-CHIP;100ohm,5%,1/10W,TP,1608	1	SA
....4	R1349	2007-000074	R-CHIP;100ohm,5%,1/10W,TP,1608	1	SA
....4	R1350	2007-000074	R-CHIP;100ohm,5%,1/10W,TP,1608	1	SA
....4	R1381	2007-000074	R-CHIP;100ohm,5%,1/10W,TP,1608	1	SA
....4	R1382	2007-000074	R-CHIP;100ohm,5%,1/10W,TP,1608	1	SA
....4	R1383	2007-000074	R-CHIP;100ohm,5%,1/10W,TP,1608	1	SA
....4	R1384	2007-000074	R-CHIP;100ohm,5%,1/10W,TP,1608	1	SA
....4	R1401	2007-000074	R-CHIP;100ohm,5%,1/10W,TP,1608	1	SA
....4	R1402	2007-000074	R-CHIP;100ohm,5%,1/10W,TP,1608	1	SA
....4	R1403	2007-000074	R-CHIP;100ohm,5%,1/10W,TP,1608	1	SA
....4	R1404	2007-000074	R-CHIP;100ohm,5%,1/10W,TP,1608	1	SA
....4	R1405	2007-000074	R-CHIP;100ohm,5%,1/10W,TP,1608	1	SA
....4	R1406	2007-000074	R-CHIP;100ohm,5%,1/10W,TP,1608	1	SA
....4	R1407	2007-000074	R-CHIP;100ohm,5%,1/10W,TP,1608	1	SA
....4	R1408	2007-000074	R-CHIP;100ohm,5%,1/10W,TP,1608	1	SA
....4	R1612	2007-000074	R-CHIP;100ohm,5%,1/10W,TP,1608	1	SA
....4	R1628	2007-000074	R-CHIP;100ohm,5%,1/10W,TP,1608	1	SA
....4	R223	2007-000074	R-CHIP;100ohm,5%,1/10W,TP,1608	1	SA
....4	R225	2007-000074	R-CHIP;100ohm,5%,1/10W,TP,1608	1	SA
....4	R226	2007-000074	R-CHIP;100ohm,5%,1/10W,TP,1608	1	SA
....4	R234	2007-000074	R-CHIP;100ohm,5%,1/10W,TP,1608	1	SA
....4	R236	2007-000074	R-CHIP;100ohm,5%,1/10W,TP,1608	1	SA
....4	R238	2007-000074	R-CHIP;100ohm,5%,1/10W,TP,1608	1	SA
....4	R239	2007-000074	R-CHIP;100ohm,5%,1/10W,TP,1608	1	SA
....4	R240	2007-000074	R-CHIP;100ohm,5%,1/10W,TP,1608	1	SA
....4	R241	2007-000074	R-CHIP;100ohm,5%,1/10W,TP,1608	1	SA
....4	R242	2007-000074	R-CHIP;100ohm,5%,1/10W,TP,1608	1	SA
....4	R243	2007-000074	R-CHIP;100ohm,5%,1/10W,TP,1608	1	SA
....4	R244	2007-000074	R-CHIP;100ohm,5%,1/10W,TP,1608	1	SA
....4	R250	2007-000074	R-CHIP;100ohm,5%,1/10W,TP,1608	1	SA
....4	R251	2007-000074	R-CHIP;100ohm,5%,1/10W,TP,1608	1	SA
....4	R252	2007-000074	R-CHIP;100ohm,5%,1/10W,TP,1608	1	SA
....4	R254	2007-000074	R-CHIP;100ohm,5%,1/10W,TP,1608	1	SA
....4	R255	2007-000074	R-CHIP;100ohm,5%,1/10W,TP,1608	1	SA
....4	R256	2007-000074	R-CHIP;100ohm,5%,1/10W,TP,1608	1	SA
....4	R258	2007-000074	R-CHIP;100ohm,5%,1/10W,TP,1608	1	SA
....4	R320	2007-000074	R-CHIP;100ohm,5%,1/10W,TP,1608	1	SA
....4	R321	2007-000074	R-CHIP;100ohm,5%,1/10W,TP,1608	1	SA
....4	R325	2007-000074	R-CHIP;100ohm,5%,1/10W,TP,1608	1	SA
....4	R326	2007-000074	R-CHIP;100ohm,5%,1/10W,TP,1608	1	SA
....4	R327	2007-000074	R-CHIP;100ohm,5%,1/10W,TP,1608	1	SA
....4	R407	2007-000074	R-CHIP;100ohm,5%,1/10W,TP,1608	1	SA
....4	R502	2007-000074	R-CHIP;100ohm,5%,1/10W,TP,1608	1	SA
....4	R510	2007-000074	R-CHIP;100ohm,5%,1/10W,TP,1608	1	SA
....4	R601	2007-000074	R-CHIP;100ohm,5%,1/10W,TP,1608	1	SA
....4	R603	2007-000074	R-CHIP;100ohm,5%,1/10W,TP,1608	1	SA
....4	R614	2007-000074	R-CHIP;100ohm,5%,1/10W,TP,1608	1	SA
....4	R615	2007-000074	R-CHIP;100ohm,5%,1/10W,TP,1608	1	SA
....4	R616	2007-000074	R-CHIP;100ohm,5%,1/10W,TP,1608	1	SA
....4	R619	2007-000074	R-CHIP;100ohm,5%,1/10W,TP,1608	1	SA
....4	R620	2007-000074	R-CHIP;100ohm,5%,1/10W,TP,1608	1	SA
....4	R713	2007-000074	R-CHIP;100ohm,5%,1/10W,TP,1608	1	SA
....4	R720	2007-000074	R-CHIP;100ohm,5%,1/10W,TP,1608	1	SA
....4	R721	2007-000074	R-CHIP;100ohm,5%,1/10W,TP,1608	1	SA
....4	R821	2007-000074	R-CHIP;100ohm,5%,1/10W,TP,1608	1	SA
....4	R823	2007-000074	R-CHIP;100ohm,5%,1/10W,TP,1608	1	SA
....4	R824	2007-000074	R-CHIP;100ohm,5%,1/10W,TP,1608	1	SA
....4	R825	2007-000074	R-CHIP;100ohm,5%,1/10W,TP,1608	1	SA
....4	R826	2007-000074	R-CHIP;100ohm,5%,1/10W,TP,1608	1	SA
....4	R1056	2007-000075	R-CHIP;220ohm,5%,1/10W,TP,1608	1	SA
....4	R515	2007-000076	R-CHIP;330ohm,5%,1/10W,TP,1608	1	SA
....4	R1046	2007-000077	R-CHIP;470ohm,5%,1/10W,TP,1608	1	SA
....4	R1434	2007-000077	R-CHIP;470ohm,5%,1/10W,TP,1608	1	SA
....4	R1435	2007-000077	R-CHIP;470ohm,5%,1/10W,TP,1608	1	SA
....4	R274	2007-000077	R-CHIP;470ohm,5%,1/10W,TP,1608	1	SA
....4	R609	2007-000077	R-CHIP;470ohm,5%,1/10W,TP,1608	1	SA
....4	R610	2007-000077	R-CHIP;470ohm,5%,1/10W,TP,1608	1	SA
....4	R612	2007-000077	R-CHIP;470ohm,5%,1/10W,TP,1608	1	SA
....4	R613	2007-000077	R-CHIP;470ohm,5%,1/10W,TP,1608	1	SA
....4	R827	2007-000077	R-CHIP;470ohm,5%,1/10W,TP,1608	1	SA

Level	Loc. No.	Code No.	Description & Specification	Q'ty	SA/SNA
....4	R828	2007-000077	R-CHIP;470ohm,5%,1/10W,TP,1608	1	SA
....4	R859	2007-000077	R-CHIP;470ohm,5%,1/10W,TP,1608	1	SA
....4	R860	2007-000077	R-CHIP;470ohm,5%,1/10W,TP,1608	1	SA
....4	R1002	2007-000078	R-CHIP;1Kohm,5%,1/10W,TP,1608	1	SA
....4	R1043	2007-000078	R-CHIP;1Kohm,5%,1/10W,TP,1608	1	SA
....4	R1051	2007-000078	R-CHIP;1Kohm,5%,1/10W,TP,1608	1	SA
....4	R112	2007-000078	R-CHIP;1Kohm,5%,1/10W,TP,1608	1	SA
....4	R1312	2007-000078	R-CHIP;1Kohm,5%,1/10W,TP,1608	1	SA
....4	R1323	2007-000078	R-CHIP;1Kohm,5%,1/10W,TP,1608	1	SA
....4	R1340	2007-000078	R-CHIP;1Kohm,5%,1/10W,TP,1608	1	SA
....4	R233	2007-000078	R-CHIP;1Kohm,5%,1/10W,TP,1608	1	SA
....4	R266	2007-000078	R-CHIP;1Kohm,5%,1/10W,TP,1608	1	SA
....4	R408	2007-000078	R-CHIP;1Kohm,5%,1/10W,TP,1608	1	SA
....4	R415	2007-000078	R-CHIP;1Kohm,5%,1/10W,TP,1608	1	SA
....4	R416	2007-000078	R-CHIP;1Kohm,5%,1/10W,TP,1608	1	SA
....4	R508	2007-000078	R-CHIP;1Kohm,5%,1/10W,TP,1608	1	SA
....4	R524	2007-000078	R-CHIP;1Kohm,5%,1/10W,TP,1608	1	SA
....4	R847	2007-000078	R-CHIP;1Kohm,5%,1/10W,TP,1608	1	SA
....4	R924	2007-000078	R-CHIP;1Kohm,5%,1/10W,TP,1608	1	SA
....4	R849	2007-000079	R-CHIP;1.8Kohm,5%,1/10W,TP,1608	1	SA
....4	R1048	2007-000082	R-CHIP;3.3Kohm,5%,1/10W,TP,1608	1	SA
....4	R1049	2007-000082	R-CHIP;3.3Kohm,5%,1/10W,TP,1608	1	SA
....4	R1045	2007-000084	R-CHIP;4.7Kohm,5%,1/10W,TP,1608	1	SA
....4	R113	2007-000084	R-CHIP;4.7Kohm,5%,1/10W,TP,1608	1	SA
....4	R1301	2007-000084	R-CHIP;4.7Kohm,5%,1/10W,TP,1608	1	SA
....4	R1325	2007-000084	R-CHIP;4.7Kohm,5%,1/10W,TP,1608	1	SA
....4	R1361	2007-000084	R-CHIP;4.7Kohm,5%,1/10W,TP,1608	1	SA
....4	R1362	2007-000084	R-CHIP;4.7Kohm,5%,1/10W,TP,1608	1	SA
....4	R1363	2007-000084	R-CHIP;4.7Kohm,5%,1/10W,TP,1608	1	SA
....4	R1364	2007-000084	R-CHIP;4.7Kohm,5%,1/10W,TP,1608	1	SA
....4	R1365	2007-000084	R-CHIP;4.7Kohm,5%,1/10W,TP,1608	1	SA
....4	R1366	2007-000084	R-CHIP;4.7Kohm,5%,1/10W,TP,1608	1	SA
....4	R1367	2007-000084	R-CHIP;4.7Kohm,5%,1/10W,TP,1608	1	SA
....4	R1368	2007-000084	R-CHIP;4.7Kohm,5%,1/10W,TP,1608	1	SA
....4	R1369	2007-000084	R-CHIP;4.7Kohm,5%,1/10W,TP,1608	1	SA
....4	R1370	2007-000084	R-CHIP;4.7Kohm,5%,1/10W,TP,1608	1	SA
....4	R1371	2007-000084	R-CHIP;4.7Kohm,5%,1/10W,TP,1608	1	SA
....4	R1372	2007-000084	R-CHIP;4.7Kohm,5%,1/10W,TP,1608	1	SA
....4	R1373	2007-000084	R-CHIP;4.7Kohm,5%,1/10W,TP,1608	1	SA
....4	R1374	2007-000084	R-CHIP;4.7Kohm,5%,1/10W,TP,1608	1	SA
....4	R1375	2007-000084	R-CHIP;4.7Kohm,5%,1/10W,TP,1608	1	SA
....4	R1386	2007-000084	R-CHIP;4.7Kohm,5%,1/10W,TP,1608	1	SA
....4	R1387	2007-000084	R-CHIP;4.7Kohm,5%,1/10W,TP,1608	1	SA
....4	R1388	2007-000084	R-CHIP;4.7Kohm,5%,1/10W,TP,1608	1	SA
....4	R1389	2007-000084	R-CHIP;4.7Kohm,5%,1/10W,TP,1608	1	SA
....4	R1390	2007-000084	R-CHIP;4.7Kohm,5%,1/10W,TP,1608	1	SA
....4	R1418	2007-000084	R-CHIP;4.7Kohm,5%,1/10W,TP,1608	1	SA
....4	R1419	2007-000084	R-CHIP;4.7Kohm,5%,1/10W,TP,1608	1	SA
....4	R1420	2007-000084	R-CHIP;4.7Kohm,5%,1/10W,TP,1608	1	SA
....4	R1421	2007-000084	R-CHIP;4.7Kohm,5%,1/10W,TP,1608	1	SA
....4	R1422	2007-000084	R-CHIP;4.7Kohm,5%,1/10W,TP,1608	1	SA
....4	R1423	2007-000084	R-CHIP;4.7Kohm,5%,1/10W,TP,1608	1	SA
....4	R1424	2007-000084	R-CHIP;4.7Kohm,5%,1/10W,TP,1608	1	SA
....4	R1605	2007-000084	R-CHIP;4.7Kohm,5%,1/10W,TP,1608	1	SA
....4	R1607	2007-000084	R-CHIP;4.7Kohm,5%,1/10W,TP,1608	1	SA
....4	R1609	2007-000084	R-CHIP;4.7Kohm,5%,1/10W,TP,1608	1	SA
....4	R1613	2007-000084	R-CHIP;4.7Kohm,5%,1/10W,TP,1608	1	SA
....4	R1622	2007-000084	R-CHIP;4.7Kohm,5%,1/10W,TP,1608	1	SA
....4	R1623	2007-000084	R-CHIP;4.7Kohm,5%,1/10W,TP,1608	1	SA
....4	R1624	2007-000084	R-CHIP;4.7Kohm,5%,1/10W,TP,1608	1	SA
....4	R1625	2007-000084	R-CHIP;4.7Kohm,5%,1/10W,TP,1608	1	SA
....4	R1626	2007-000084	R-CHIP;4.7Kohm,5%,1/10W,TP,1608	1	SA
....4	R257	2007-000084	R-CHIP;4.7Kohm,5%,1/10W,TP,1608	1	SA
....4	R263	2007-000084	R-CHIP;4.7Kohm,5%,1/10W,TP,1608	1	SA
....4	R267	2007-000084	R-CHIP;4.7Kohm,5%,1/10W,TP,1608	1	SA
....4	R268	2007-000084	R-CHIP;4.7Kohm,5%,1/10W,TP,1608	1	SA
....4	R322	2007-000084	R-CHIP;4.7Kohm,5%,1/10W,TP,1608	1	SA
....4	R328	2007-000084	R-CHIP;4.7Kohm,5%,1/10W,TP,1608	1	SA
....4	R414	2007-000084	R-CHIP;4.7Kohm,5%,1/10W,TP,1608	1	SA
....4	R523	2007-000084	R-CHIP;4.7Kohm,5%,1/10W,TP,1608	1	SA
....4	R719	2007-000084	R-CHIP;4.7Kohm,5%,1/10W,TP,1608	1	SA
....4	R916	2007-000084	R-CHIP;4.7Kohm,5%,1/10W,TP,1608	1	SA

Level	Loc. No.	Code No.	Description & Specification	Q'ty	SA/SNA
....4	R919	2007-000084	R-CHIP;4.7Kohm,5%,1/10W,TP,1608	1	SA
....4	R921	2007-000084	R-CHIP;4.7Kohm,5%,1/10W,TP,1608	1	SA
....4	R926	2007-000084	R-CHIP;4.7Kohm,5%,1/10W,TP,1608	1	SA
....4	R927	2007-000084	R-CHIP;4.7Kohm,5%,1/10W,TP,1608	1	SA
....4	R404	2007-000087	R-CHIP;6.8Kohm,5%,1/10W,TP,1608	1	SA
....4	R102	2007-000090	R-CHIP;10Kohm,5%,1/10W,TP,1608	1	SA
....4	R103	2007-000090	R-CHIP;10Kohm,5%,1/10W,TP,1608	1	SA
....4	R106	2007-000090	R-CHIP;10Kohm,5%,1/10W,TP,1608	1	SA
....4	R107	2007-000090	R-CHIP;10Kohm,5%,1/10W,TP,1608	1	SA
....4	R1104	2007-000090	R-CHIP;10Kohm,5%,1/10W,TP,1608	1	SA
....4	R1334	2007-000090	R-CHIP;10Kohm,5%,1/10W,TP,1608	1	SA
....4	R1335	2007-000090	R-CHIP;10Kohm,5%,1/10W,TP,1608	1	SA
....4	R1376	2007-000090	R-CHIP;10Kohm,5%,1/10W,TP,1608	1	SA
....4	R1377	2007-000090	R-CHIP;10Kohm,5%,1/10W,TP,1608	1	SA
....4	R1378	2007-000090	R-CHIP;10Kohm,5%,1/10W,TP,1608	1	SA
....4	R1432	2007-000090	R-CHIP;10Kohm,5%,1/10W,TP,1608	1	SA
....4	R1433	2007-000090	R-CHIP;10Kohm,5%,1/10W,TP,1608	1	SA
....4	R1608	2007-000090	R-CHIP;10Kohm,5%,1/10W,TP,1608	1	SA
....4	R201	2007-000090	R-CHIP;10Kohm,5%,1/10W,TP,1608	1	SA
....4	R202	2007-000090	R-CHIP;10Kohm,5%,1/10W,TP,1608	1	SA
....4	R203	2007-000090	R-CHIP;10Kohm,5%,1/10W,TP,1608	1	SA
....4	R204	2007-000090	R-CHIP;10Kohm,5%,1/10W,TP,1608	1	SA
....4	R205	2007-000090	R-CHIP;10Kohm,5%,1/10W,TP,1608	1	SA
....4	R208	2007-000090	R-CHIP;10Kohm,5%,1/10W,TP,1608	1	SA
....4	R210	2007-000090	R-CHIP;10Kohm,5%,1/10W,TP,1608	1	SA
....4	R212	2007-000090	R-CHIP;10Kohm,5%,1/10W,TP,1608	1	SA
....4	R213	2007-000090	R-CHIP;10Kohm,5%,1/10W,TP,1608	1	SA
....4	R214	2007-000090	R-CHIP;10Kohm,5%,1/10W,TP,1608	1	SA
....4	R215	2007-000090	R-CHIP;10Kohm,5%,1/10W,TP,1608	1	SA
....4	R217	2007-000090	R-CHIP;10Kohm,5%,1/10W,TP,1608	1	SA
....4	R218	2007-000090	R-CHIP;10Kohm,5%,1/10W,TP,1608	1	SA
....4	R219	2007-000090	R-CHIP;10Kohm,5%,1/10W,TP,1608	1	SA
....4	R220	2007-000090	R-CHIP;10Kohm,5%,1/10W,TP,1608	1	SA
....4	R221	2007-000090	R-CHIP;10Kohm,5%,1/10W,TP,1608	1	SA
....4	R222	2007-000090	R-CHIP;10Kohm,5%,1/10W,TP,1608	1	SA
....4	R227	2007-000090	R-CHIP;10Kohm,5%,1/10W,TP,1608	1	SA
....4	R230	2007-000090	R-CHIP;10Kohm,5%,1/10W,TP,1608	1	SA
....4	R231	2007-000090	R-CHIP;10Kohm,5%,1/10W,TP,1608	1	SA
....4	R260	2007-000090	R-CHIP;10Kohm,5%,1/10W,TP,1608	1	SA
....4	R265	2007-000090	R-CHIP;10Kohm,5%,1/10W,TP,1608	1	SA
....4	R271	2007-000090	R-CHIP;10Kohm,5%,1/10W,TP,1608	1	SA
....4	R273	2007-000090	R-CHIP;10Kohm,5%,1/10W,TP,1608	1	SA
....4	R309	2007-000090	R-CHIP;10Kohm,5%,1/10W,TP,1608	1	SA
....4	R310	2007-000090	R-CHIP;10Kohm,5%,1/10W,TP,1608	1	SA
....4	R331	2007-000090	R-CHIP;10Kohm,5%,1/10W,TP,1608	1	SA
....4	R412	2007-000090	R-CHIP;10Kohm,5%,1/10W,TP,1608	1	SA
....4	R419	2007-000090	R-CHIP;10Kohm,5%,1/10W,TP,1608	1	SA
....4	R801	2007-000090	R-CHIP;10Kohm,5%,1/10W,TP,1608	1	SA
....4	R802	2007-000090	R-CHIP;10Kohm,5%,1/10W,TP,1608	1	SA
....4	R806	2007-000090	R-CHIP;10Kohm,5%,1/10W,TP,1608	1	SA
....4	R808	2007-000090	R-CHIP;10Kohm,5%,1/10W,TP,1608	1	SA
....4	R809	2007-000090	R-CHIP;10Kohm,5%,1/10W,TP,1608	1	SA
....4	R829	2007-000090	R-CHIP;10Kohm,5%,1/10W,TP,1608	1	SA
....4	R830	2007-000090	R-CHIP;10Kohm,5%,1/10W,TP,1608	1	SA
....4	R834	2007-000090	R-CHIP;10Kohm,5%,1/10W,TP,1608	1	SA
....4	R913	2007-000090	R-CHIP;10Kohm,5%,1/10W,TP,1608	1	SA
....4	R915	2007-000090	R-CHIP;10Kohm,5%,1/10W,TP,1608	1	SA
....4	R928	2007-000090	R-CHIP;10Kohm,5%,1/10W,TP,1608	1	SA
....4	R934	2007-000090	R-CHIP;10Kohm,5%,1/10W,TP,1608	1	SA
....4	R937	2007-000090	R-CHIP;10Kohm,5%,1/10W,TP,1608	1	SA
....4	R108	2007-000092	R-CHIP;15Kohm,5%,1/10W,TP,1608	1	SA
....4	R110	2007-000092	R-CHIP;15Kohm,5%,1/10W,TP,1608	1	SA
....4	R1320	2007-000092	R-CHIP;15Kohm,5%,1/10W,TP,1608	1	SA
....4	R1321	2007-000092	R-CHIP;15Kohm,5%,1/10W,TP,1608	1	SA
....4	R333	2007-000093	R-CHIP;20Kohm,5%,1/10W,TP,1608	1	SA
....4	R334	2007-000093	R-CHIP;20Kohm,5%,1/10W,TP,1608	1	SA
....4	R848	2007-000093	R-CHIP;20Kohm,5%,1/10W,TP,1608	1	SA
....4	R517	2007-000094	R-CHIP;22Kohm,5%,1/10W,TP,1608	1	SA
....4	R1425	2007-000097	R-CHIP;47Kohm,5%,1/10W,TP,1608	1	SA
....4	R245	2007-000097	R-CHIP;47Kohm,5%,1/10W,TP,1608	1	SA
....4	R301	2007-000100	R-CHIP;68Kohm,5%,1/10W,TP,1608	1	SA
....4	R302	2007-000100	R-CHIP;68Kohm,5%,1/10W,TP,1608	1	SA

Level	Loc. No.	Code No.	Description & Specification	Q'ty	SA/SNA
....4	R303	2007-000100	R-CHIP;68Kohm,5%,1/10W,TP,1608	1	SA
....4	R304	2007-000100	R-CHIP;68Kohm,5%,1/10W,TP,1608	1	SA
....4	R305	2007-000100	R-CHIP;68Kohm,5%,1/10W,TP,1608	1	SA
....4	R306	2007-000100	R-CHIP;68Kohm,5%,1/10W,TP,1608	1	SA
....4	R307	2007-000100	R-CHIP;68Kohm,5%,1/10W,TP,1608	1	SA
....4	R308	2007-000100	R-CHIP;68Kohm,5%,1/10W,TP,1608	1	SA
....4	R311	2007-000100	R-CHIP;68Kohm,5%,1/10W,TP,1608	1	SA
....4	R312	2007-000100	R-CHIP;68Kohm,5%,1/10W,TP,1608	1	SA
....4	R313	2007-000100	R-CHIP;68Kohm,5%,1/10W,TP,1608	1	SA
....4	R314	2007-000100	R-CHIP;68Kohm,5%,1/10W,TP,1608	1	SA
....4	R315	2007-000100	R-CHIP;68Kohm,5%,1/10W,TP,1608	1	SA
....4	R316	2007-000100	R-CHIP;68Kohm,5%,1/10W,TP,1608	1	SA
....4	R317	2007-000100	R-CHIP;68Kohm,5%,1/10W,TP,1608	1	SA
....4	R318	2007-000100	R-CHIP;68Kohm,5%,1/10W,TP,1608	1	SA
....4	R101	2007-000102	R-CHIP;100Kohm,5%,1/10W,TP,1608	1	SA
....4	R330	2007-000102	R-CHIP;100Kohm,5%,1/10W,TP,1608	1	SA
....4	R332	2007-000102	R-CHIP;100Kohm,5%,1/10W,TP,1608	1	SA
....4	R335	2007-000102	R-CHIP;100Kohm,5%,1/10W,TP,1608	1	SA
....4	R336	2007-000102	R-CHIP;100Kohm,5%,1/10W,TP,1608	1	SA
....4	R418	2007-000102	R-CHIP;100Kohm,5%,1/10W,TP,1608	1	SA
....4	R512	2007-000102	R-CHIP;100Kohm,5%,1/10W,TP,1608	1	SA
....4	R520	2007-000102	R-CHIP;100Kohm,5%,1/10W,TP,1608	1	SA
....4	R621	2007-000102	R-CHIP;100Kohm,5%,1/10W,TP,1608	1	SA
....4	R622	2007-000102	R-CHIP;100Kohm,5%,1/10W,TP,1608	1	SA
....4	R504	2007-000106	R-CHIP;220Kohm,5%,1/10W,TP,1608	1	SA
....4	R505	2007-000106	R-CHIP;220Kohm,5%,1/10W,TP,1608	1	SA
....4	R1324	2007-000113	R-CHIP;33ohm,5%,1/10W,TP,1608	1	SA
....4	R1344	2007-000113	R-CHIP;33ohm,5%,1/10W,TP,1608	1	SA
....4	R1351	2007-000113	R-CHIP;33ohm,5%,1/10W,TP,1608	1	SA
....4	R1352	2007-000113	R-CHIP;33ohm,5%,1/10W,TP,1608	1	SA
....4	R1354	2007-000113	R-CHIP;33ohm,5%,1/10W,TP,1608	1	SA
....4	R1356	2007-000113	R-CHIP;33ohm,5%,1/10W,TP,1608	1	SA
....4	R1358	2007-000113	R-CHIP;33ohm,5%,1/10W,TP,1608	1	SA
....4	R1385	2007-000113	R-CHIP;33ohm,5%,1/10W,TP,1608	1	SA
....4	R1501	2007-000113	R-CHIP;33ohm,5%,1/10W,TP,1608	1	SA
....4	R1502	2007-000113	R-CHIP;33ohm,5%,1/10W,TP,1608	1	SA
....4	R1503	2007-000113	R-CHIP;33ohm,5%,1/10W,TP,1608	1	SA
....4	R1504	2007-000113	R-CHIP;33ohm,5%,1/10W,TP,1608	1	SA
....4	R1505	2007-000113	R-CHIP;33ohm,5%,1/10W,TP,1608	1	SA
....4	R1506	2007-000113	R-CHIP;33ohm,5%,1/10W,TP,1608	1	SA
....4	R1507	2007-000113	R-CHIP;33ohm,5%,1/10W,TP,1608	1	SA
....4	R1508	2007-000113	R-CHIP;33ohm,5%,1/10W,TP,1608	1	SA
....4	R1509	2007-000113	R-CHIP;33ohm,5%,1/10W,TP,1608	1	SA
....4	R1510	2007-000113	R-CHIP;33ohm,5%,1/10W,TP,1608	1	SA
....4	R1511	2007-000113	R-CHIP;33ohm,5%,1/10W,TP,1608	1	SA
....4	R1512	2007-000113	R-CHIP;33ohm,5%,1/10W,TP,1608	1	SA
....4	R1513	2007-000113	R-CHIP;33ohm,5%,1/10W,TP,1608	1	SA
....4	R1514	2007-000113	R-CHIP;33ohm,5%,1/10W,TP,1608	1	SA
....4	R1515	2007-000113	R-CHIP;33ohm,5%,1/10W,TP,1608	1	SA
....4	R1516	2007-000113	R-CHIP;33ohm,5%,1/10W,TP,1608	1	SA
....4	R1517	2007-000113	R-CHIP;33ohm,5%,1/10W,TP,1608	1	SA
....4	R1518	2007-000113	R-CHIP;33ohm,5%,1/10W,TP,1608	1	SA
....4	R1606	2007-000113	R-CHIP;33ohm,5%,1/10W,TP,1608	1	SA
....4	R1610	2007-000113	R-CHIP;33ohm,5%,1/10W,TP,1608	1	SA
....4	R1611	2007-000113	R-CHIP;33ohm,5%,1/10W,TP,1608	1	SA
....4	R1614	2007-000113	R-CHIP;33ohm,5%,1/10W,TP,1608	1	SA
....4	R1615	2007-000113	R-CHIP;33ohm,5%,1/10W,TP,1608	1	SA
....4	R1616	2007-000113	R-CHIP;33ohm,5%,1/10W,TP,1608	1	SA
....4	R1618	2007-000113	R-CHIP;33ohm,5%,1/10W,TP,1608	1	SA
....4	R911	2007-000113	R-CHIP;33ohm,5%,1/10W,TP,1608	1	SA
....4	R912	2007-000113	R-CHIP;33ohm,5%,1/10W,TP,1608	1	SA
....4	R914	2007-000113	R-CHIP;33ohm,5%,1/10W,TP,1608	1	SA
....4	R861	2007-000116	R-CHIP;120ohm,5%,1/10W,TP,1608	1	SA
....4	R319	2007-000119	R-CHIP;560ohm,5%,1/10W,TP,1608	1	SA
....4	R715	2007-000123	R-CHIP;1.5Kohm,5%,1/10W,TP,1608	1	SA
....4	R716	2007-000123	R-CHIP;1.5Kohm,5%,1/10W,TP,1608	1	SA
....4	R717	2007-000123	R-CHIP;1.5Kohm,5%,1/10W,TP,1608	1	SA
....4	R850	2007-000123	R-CHIP;1.5Kohm,5%,1/10W,TP,1608	1	SA
....4	R411	2007-000125	R-CHIP;3.9Kohm,5%,1/10W,TP,1608	1	SA
....4	R1426	2007-000130	R-CHIP;39Kohm,5%,1/10W,TP,1608	1	SA
....4	R1427	2007-000130	R-CHIP;39Kohm,5%,1/10W,TP,1608	1	SA
....4	R602	2007-000309	R-CHIP;10ohm,5%,1/10W,TP,1608	1	SA

Level	Loc. No.	Code No.	Description & Specification	Q'ty	SA/SNA
....4	R604	2007-000309	R-CHIP;10ohm,5%,1/10W,TP,1608	1	SA
....4	R605	2007-000309	R-CHIP;10ohm,5%,1/10W,TP,1608	1	SA
....4	R862	2007-000309	R-CHIP;10ohm,5%,1/10W,TP,1608	1	SA
....4	R863	2007-000309	R-CHIP;10ohm,5%,1/10W,TP,1608	1	SA
....4	R864	2007-000309	R-CHIP;10ohm,5%,1/10W,TP,1608	1	SA
....4	R865	2007-000309	R-CHIP;10ohm,5%,1/10W,TP,1608	1	SA
....4	R866	2007-000309	R-CHIP;10ohm,5%,1/10W,TP,1608	1	SA
....4	R867	2007-000309	R-CHIP;10ohm,5%,1/10W,TP,1608	1	SA
....4	R868	2007-000309	R-CHIP;10ohm,5%,1/10W,TP,1608	1	SA
....4	R869	2007-000309	R-CHIP;10ohm,5%,1/10W,TP,1608	1	SA
....4	R870	2007-000309	R-CHIP;10ohm,5%,1/10W,TP,1608	1	SA
....4	R871	2007-000309	R-CHIP;10ohm,5%,1/10W,TP,1608	1	SA
....4	R872	2007-000309	R-CHIP;10ohm,5%,1/10W,TP,1608	1	SA
....4	R873	2007-000309	R-CHIP;10ohm,5%,1/10W,TP,1608	1	SA
....4	R875	2007-000309	R-CHIP;10ohm,5%,1/10W,TP,1608	1	SA
....4	R877	2007-000309	R-CHIP;10ohm,5%,1/10W,TP,1608	1	SA
....4	R880	2007-000309	R-CHIP;10ohm,5%,1/10W,TP,1608	1	SA
....4	R881	2007-000309	R-CHIP;10ohm,5%,1/10W,TP,1608	1	SA
....4	R901	2007-000309	R-CHIP;10ohm,5%,1/10W,TP,1608	1	SA
....4	R902	2007-000309	R-CHIP;10ohm,5%,1/10W,TP,1608	1	SA
....4	R903	2007-000309	R-CHIP;10ohm,5%,1/10W,TP,1608	1	SA
....4	R904	2007-000309	R-CHIP;10ohm,5%,1/10W,TP,1608	1	SA
....4	R905	2007-000309	R-CHIP;10ohm,5%,1/10W,TP,1608	1	SA
....4	R906	2007-000309	R-CHIP;10ohm,5%,1/10W,TP,1608	1	SA
....4	R907	2007-000309	R-CHIP;10ohm,5%,1/10W,TP,1608	1	SA
....4	R908	2007-000309	R-CHIP;10ohm,5%,1/10W,TP,1608	1	SA
....4	R1428	2007-000329	R-CHIP;11Kohm,5%,1/10W,TP,1608	1	SA
....4	R1429	2007-000329	R-CHIP;11Kohm,5%,1/10W,TP,1608	1	SA
....4	R224	2007-000539	R-CHIP;200ohm,5%,1/10W,TP,1608	1	SA
....4	R839	2007-000539	R-CHIP;200ohm,5%,1/10W,TP,1608	1	SA
....4	R840	2007-000539	R-CHIP;200ohm,5%,1/10W,TP,1608	1	SA
....4	R841	2007-000539	R-CHIP;200ohm,5%,1/10W,TP,1608	1	SA
....4	R842	2007-000539	R-CHIP;200ohm,5%,1/10W,TP,1608	1	SA
....4	R843	2007-000539	R-CHIP;200ohm,5%,1/10W,TP,1608	1	SA
....4	R844	2007-000539	R-CHIP;200ohm,5%,1/10W,TP,1608	1	SA
....4	R845	2007-000539	R-CHIP;200ohm,5%,1/10W,TP,1608	1	SA
....4	R846	2007-000539	R-CHIP;200ohm,5%,1/10W,TP,1608	1	SA
....4	R851	2007-000539	R-CHIP;200ohm,5%,1/10W,TP,1608	1	SA
....4	R852	2007-000539	R-CHIP;200ohm,5%,1/10W,TP,1608	1	SA
....4	R853	2007-000539	R-CHIP;200ohm,5%,1/10W,TP,1608	1	SA
....4	R854	2007-000539	R-CHIP;200ohm,5%,1/10W,TP,1608	1	SA
....4	R855	2007-000539	R-CHIP;200ohm,5%,1/10W,TP,1608	1	SA
....4	R856	2007-000539	R-CHIP;200ohm,5%,1/10W,TP,1608	1	SA
....4	R857	2007-000539	R-CHIP;200ohm,5%,1/10W,TP,1608	1	SA
....4	R858	2007-000539	R-CHIP;200ohm,5%,1/10W,TP,1608	1	SA
....4	R402	2007-000593	R-CHIP;22ohm,5%,1/8W,TP,2012	1	SA
....4	R410	2007-000593	R-CHIP;22ohm,5%,1/8W,TP,2012	1	SA
....4	R1318	2007-000659	R-CHIP;27ohm,5%,1/10W,TP,1608	1	SA
....4	R1319	2007-000659	R-CHIP;27ohm,5%,1/10W,TP,1608	1	SA
....4	R109	2007-000701	R-CHIP;3.6Kohm,1%,1/10W,TP,1608	1	SA
....4	R111	2007-000701	R-CHIP;3.6Kohm,1%,1/10W,TP,1608	1	SA
....4	R805	2007-000708	R-CHIP;3.9Kohm,1%,1/10W,TP,1608	1	SA
....4	R833	2007-000708	R-CHIP;3.9Kohm,1%,1/10W,TP,1608	1	SA
....4	R1702	2007-000729	R-CHIP;300ohm,5%,1/10W,TP,1608	1	SA
....4	R1057	2007-000903	R-CHIP;430ohm,1%,1/10W,TP,1608	1	SA
....4	R1430	2007-001010	R-CHIP;51Kohm,5%,1/10W,TP,1608	1	SA
....4	R1431	2007-001010	R-CHIP;51Kohm,5%,1/10W,TP,1608	1	SA
....4	R1203	2007-001014	R-CHIP;51OHM,5%,1/10W,TP,1608	1	SA
....4	R1208	2007-001014	R-CHIP;51OHM,5%,1/10W,TP,1608	1	SA
....4	R1103	2007-001139	R-CHIP;7.5Kohm,1%,1/10W,TP,1608	1	SA
....4	R606	2007-001164	R-CHIP;75ohm,1%,1/10W,TP,1608	1	SA
....4	R607	2007-001164	R-CHIP;75ohm,1%,1/10W,TP,1608	1	SA
....4	R608	2007-001164	R-CHIP;75ohm,1%,1/10W,TP,1608	1	SA
....4	R611	2007-001164	R-CHIP;75ohm,1%,1/10W,TP,1608	1	SA
....4	R617	2007-001164	R-CHIP;75ohm,1%,1/10W,TP,1608	1	SA
....4	R618	2007-001164	R-CHIP;75ohm,1%,1/10W,TP,1608	1	SA
....4	R1411	2007-001167	R-CHIP;75ohm,5%,1/10W,TP,1608	1	SA
....4	R811	2007-001167	R-CHIP;75ohm,5%,1/10W,TP,1608	1	SA
....4	R812	2007-001167	R-CHIP;75ohm,5%,1/10W,TP,1608	1	SA
....4	R813	2007-001167	R-CHIP;75ohm,5%,1/10W,TP,1608	1	SA
....4	R819	2007-001167	R-CHIP;75ohm,5%,1/10W,TP,1608	1	SA
....4	R820	2007-001167	R-CHIP;75ohm,5%,1/10W,TP,1608	1	SA

Level	Loc. No.	Code No.	Description & Specification	Q'ty	SA/SNA
....4	R104	2007-002768	R-CHIP;6.2Kohm,1%,1/10W,TP,1608	1	SA
....4	R105	2007-002768	R-CHIP;6.2Kohm,1%,1/10W,TP,1608	1	SA
....4	R401	2007-008720	R-CHIP;4.7ohm,1%,1/4W,TP,3216	1	SA
....4	R403	2007-008720	R-CHIP;4.7ohm,1%,1/4W,TP,3216	1	SA
....4	R409	2007-008720	R-CHIP;4.7ohm,1%,1/4W,TP,3216	1	SA
....4	R413	2007-008720	R-CHIP;4.7ohm,1%,1/4W,TP,3216	1	SA
....4	IC1203	2011-000002	R-NET;22ohm,5%,1/16W,L,CHIP,8P,TP,3216	1	SA
....4	RA1201	2011-000002	R-NET;22ohm,5%,1/16W,L,CHIP,8P,TP,3216	1	SA
....4	RA1202	2011-000002	R-NET;22ohm,5%,1/16W,L,CHIP,8P,TP,3216	1	SA
....4	RA1203	2011-000002	R-NET;22ohm,5%,1/16W,L,CHIP,8P,TP,3216	1	SA
....4	RA1204	2011-000002	R-NET;22ohm,5%,1/16W,L,CHIP,8P,TP,3216	1	SA
....4	RA1205	2011-000002	R-NET;22ohm,5%,1/16W,L,CHIP,8P,TP,3216	1	SA
....4	RA1206	2011-000002	R-NET;22ohm,5%,1/16W,L,CHIP,8P,TP,3216	1	SA
....4	RA1207	2011-000002	R-NET;22ohm,5%,1/16W,L,CHIP,8P,TP,3216	1	SA
....4	RA1401	2011-000002	R-NET;22ohm,5%,1/16W,L,CHIP,8P,TP,3216	1	SA
....4	RA1402	2011-000002	R-NET;22ohm,5%,1/16W,L,CHIP,8P,TP,3216	1	SA
....4	RA1403	2011-000002	R-NET;22ohm,5%,1/16W,L,CHIP,8P,TP,3216	1	SA
....4	RA1404	2011-000002	R-NET;22ohm,5%,1/16W,L,CHIP,8P,TP,3216	1	SA
....4	RA501	2011-000475	R-NET;33ohm,5%,1/16W,L,CHIP,8P,TP,3216	1	SA
....4	RA502	2011-000475	R-NET;33ohm,5%,1/16W,L,CHIP,8P,TP,3216	1	SA
....4	RA503	2011-000475	R-NET;33ohm,5%,1/16W,L,CHIP,8P,TP,3216	1	SA
....4	RA301	2011-000651	R-NET;10ohm,5%,1/16W,L,CHIP,8P,TP,3216	1	SA
....4	RA1501	2011-000881	R-NET;33ohm,5%,1/16W,L,CHIP,8P,TP,3.2x1.	1	SA
....4	RA1502	2011-000881	R-NET;33ohm,5%,1/16W,L,CHIP,8P,TP,3.2x1.	1	SA
....4	RA1503	2011-000881	R-NET;33ohm,5%,1/16W,L,CHIP,8P,TP,3.2x1.	1	SA
....4	RA1504	2011-000881	R-NET;33ohm,5%,1/16W,L,CHIP,8P,TP,3.2x1.	1	SA
....4	RA1505	2011-000881	R-NET;33ohm,5%,1/16W,L,CHIP,8P,TP,3.2x1.	1	SA
....4	RA1506	2011-000881	R-NET;33ohm,5%,1/16W,L,CHIP,8P,TP,3.2x1.	1	SA
....4	RA1507	2011-000881	R-NET;33ohm,5%,1/16W,L,CHIP,8P,TP,3.2x1.	1	SA
....4	RA1508	2011-000881	R-NET;33ohm,5%,1/16W,L,CHIP,8P,TP,3.2x1.	1	SA
....4	RA1509	2011-000881	R-NET;33ohm,5%,1/16W,L,CHIP,8P,TP,3.2x1.	1	SA
....4	RA1510	2011-000881	R-NET;33ohm,5%,1/16W,L,CHIP,8P,TP,3.2x1.	1	SA
....4	RA1511	2011-000881	R-NET;33ohm,5%,1/16W,L,CHIP,8P,TP,3.2x1.	1	SA
....4	RA1601	2011-000881	R-NET;33ohm,5%,1/16W,L,CHIP,8P,TP,3.2x1.	1	SA
....4	RA1602	2011-000881	R-NET;33ohm,5%,1/16W,L,CHIP,8P,TP,3.2x1.	1	SA
....4	RA1603	2011-000881	R-NET;33ohm,5%,1/16W,L,CHIP,8P,TP,3.2x1.	1	SA
....4	RA1604	2011-000881	R-NET;33ohm,5%,1/16W,L,CHIP,8P,TP,3.2x1.	1	SA
....4	RA1605	2011-000881	R-NET;33ohm,5%,1/16W,L,CHIP,8P,TP,3.2x1.	1	SA
....4	RA1606	2011-000881	R-NET;33ohm,5%,1/16W,L,CHIP,8P,TP,3.2x1.	1	SA
....4	RA1607	2011-000881	R-NET;33ohm,5%,1/16W,L,CHIP,8P,TP,3.2x1.	1	SA
....4	RA1608	2011-000881	R-NET;33ohm,5%,1/16W,L,CHIP,8P,TP,3.2x1.	1	SA
....4	RA1609	2011-000881	R-NET;33ohm,5%,1/16W,L,CHIP,8P,TP,3.2x1.	1	SA
....4	RA1610	2011-000881	R-NET;33ohm,5%,1/16W,L,CHIP,8P,TP,3.2x1.	1	SA
....4	RA201	2011-001093	R-NET;100OHM,5%,1/16W,L,CHIP,8P,TP,3216	1	SA
....4	RA202	2011-001093	R-NET;100OHM,5%,1/16W,L,CHIP,8P,TP,3216	1	SA
....4	C428	2203-000125	C-CER,CHIP;1.2nF,10%,50V,X7R,TP,1608,-	1	SA
....4	C1307	2203-000140	C-CER,CHIP;1.5nF,10%,50V,X7R,1608	1	SA
....4	C315	2203-000140	C-CER,CHIP;1.5nF,10%,50V,X7R,1608	1	SA
....4	C327	2203-000140	C-CER,CHIP;1.5nF,10%,50V,X7R,1608	1	SA
....4	C103	2203-000189	C-CER,CHIP;100nF,+80-20%,25V,Y5V,1608	1	SA
....4	C105	2203-000189	C-CER,CHIP;100nF,+80-20%,25V,Y5V,1608	1	SA
....4	C107	2203-000189	C-CER,CHIP;100nF,+80-20%,25V,Y5V,1608	1	SA
....4	C1107	2203-000189	C-CER,CHIP;100nF,+80-20%,25V,Y5V,1608	1	SA
....4	C1108	2203-000189	C-CER,CHIP;100nF,+80-20%,25V,Y5V,1608	1	SA
....4	C1111	2203-000189	C-CER,CHIP;100nF,+80-20%,25V,Y5V,1608	1	SA
....4	C1112	2203-000189	C-CER,CHIP;100nF,+80-20%,25V,Y5V,1608	1	SA
....4	C1113	2203-000189	C-CER,CHIP;100nF,+80-20%,25V,Y5V,1608	1	SA
....4	C1116	2203-000189	C-CER,CHIP;100nF,+80-20%,25V,Y5V,1608	1	SA
....4	C1117	2203-000189	C-CER,CHIP;100nF,+80-20%,25V,Y5V,1608	1	SA
....4	C1120	2203-000189	C-CER,CHIP;100nF,+80-20%,25V,Y5V,1608	1	SA
....4	C1121	2203-000189	C-CER,CHIP;100nF,+80-20%,25V,Y5V,1608	1	SA
....4	C1125	2203-000189	C-CER,CHIP;100nF,+80-20%,25V,Y5V,1608	1	SA
....4	C1126	2203-000189	C-CER,CHIP;100nF,+80-20%,25V,Y5V,1608	1	SA
....4	C1127	2203-000189	C-CER,CHIP;100nF,+80-20%,25V,Y5V,1608	1	SA
....4	C1128	2203-000189	C-CER,CHIP;100nF,+80-20%,25V,Y5V,1608	1	SA
....4	C1129	2203-000189	C-CER,CHIP;100nF,+80-20%,25V,Y5V,1608	1	SA
....4	C1133	2203-000189	C-CER,CHIP;100nF,+80-20%,25V,Y5V,1608	1	SA
....4	C1134	2203-000189	C-CER,CHIP;100nF,+80-20%,25V,Y5V,1608	1	SA
....4	C1135	2203-000189	C-CER,CHIP;100nF,+80-20%,25V,Y5V,1608	1	SA
....4	C1136	2203-000189	C-CER,CHIP;100nF,+80-20%,25V,Y5V,1608	1	SA
....4	C1137	2203-000189	C-CER,CHIP;100nF,+80-20%,25V,Y5V,1608	1	SA
....4	C1140	2203-000189	C-CER,CHIP;100nF,+80-20%,25V,Y5V,1608	1	SA

Level	Loc. No.	Code No.	Description & Specification	Q'ty	SA/SNA
....4	C1141	2203-000189	C-CER,CHIP;100nF,+80-20%,25V,Y5V,1608	1	SA
....4	C1144	2203-000189	C-CER,CHIP;100nF,+80-20%,25V,Y5V,1608	1	SA
....4	C1145	2203-000189	C-CER,CHIP;100nF,+80-20%,25V,Y5V,1608	1	SA
....4	C1147	2203-000189	C-CER,CHIP;100nF,+80-20%,25V,Y5V,1608	1	SA
....4	C1148	2203-000189	C-CER,CHIP;100nF,+80-20%,25V,Y5V,1608	1	SA
....4	C1149	2203-000189	C-CER,CHIP;100nF,+80-20%,25V,Y5V,1608	1	SA
....4	C1150	2203-000189	C-CER,CHIP;100nF,+80-20%,25V,Y5V,1608	1	SA
....4	C1156	2203-000189	C-CER,CHIP;100nF,+80-20%,25V,Y5V,1608	1	SA
....4	C1157	2203-000189	C-CER,CHIP;100nF,+80-20%,25V,Y5V,1608	1	SA
....4	C1158	2203-000189	C-CER,CHIP;100nF,+80-20%,25V,Y5V,1608	1	SA
....4	C1159	2203-000189	C-CER,CHIP;100nF,+80-20%,25V,Y5V,1608	1	SA
....4	C116	2203-000189	C-CER,CHIP;100nF,+80-20%,25V,Y5V,1608	1	SA
....4	C1160	2203-000189	C-CER,CHIP;100nF,+80-20%,25V,Y5V,1608	1	SA
....4	C1161	2203-000189	C-CER,CHIP;100nF,+80-20%,25V,Y5V,1608	1	SA
....4	C1162	2203-000189	C-CER,CHIP;100nF,+80-20%,25V,Y5V,1608	1	SA
....4	C1163	2203-000189	C-CER,CHIP;100nF,+80-20%,25V,Y5V,1608	1	SA
....4	C1164	2203-000189	C-CER,CHIP;100nF,+80-20%,25V,Y5V,1608	1	SA
....4	C1165	2203-000189	C-CER,CHIP;100nF,+80-20%,25V,Y5V,1608	1	SA
....4	C1166	2203-000189	C-CER,CHIP;100nF,+80-20%,25V,Y5V,1608	1	SA
....4	C1167	2203-000189	C-CER,CHIP;100nF,+80-20%,25V,Y5V,1608	1	SA
....4	C117	2203-000189	C-CER,CHIP;100nF,+80-20%,25V,Y5V,1608	1	SA
....4	C124	2203-000189	C-CER,CHIP;100nF,+80-20%,25V,Y5V,1608	1	SA
....4	C1302	2203-000189	C-CER,CHIP;100nF,+80-20%,25V,Y5V,1608	1	SA
....4	C1401	2203-000189	C-CER,CHIP;100nF,+80-20%,25V,Y5V,1608	1	SA
....4	C1403	2203-000189	C-CER,CHIP;100nF,+80-20%,25V,Y5V,1608	1	SA
....4	C153	2203-000189	C-CER,CHIP;100nF,+80-20%,25V,Y5V,1608	1	SA
....4	C155	2203-000189	C-CER,CHIP;100nF,+80-20%,25V,Y5V,1608	1	SA
....4	C157	2203-000189	C-CER,CHIP;100nF,+80-20%,25V,Y5V,1608	1	SA
....4	C1705	2203-000189	C-CER,CHIP;100nF,+80-20%,25V,Y5V,1608	1	SA
....4	C1706	2203-000189	C-CER,CHIP;100nF,+80-20%,25V,Y5V,1608	1	SA
....4	C1707	2203-000189	C-CER,CHIP;100nF,+80-20%,25V,Y5V,1608	1	SA
....4	C1708	2203-000189	C-CER,CHIP;100nF,+80-20%,25V,Y5V,1608	1	SA
....4	C1709	2203-000189	C-CER,CHIP;100nF,+80-20%,25V,Y5V,1608	1	SA
....4	C1713	2203-000189	C-CER,CHIP;100nF,+80-20%,25V,Y5V,1608	1	SA
....4	C1714	2203-000189	C-CER,CHIP;100nF,+80-20%,25V,Y5V,1608	1	SA
....4	C1715	2203-000189	C-CER,CHIP;100nF,+80-20%,25V,Y5V,1608	1	SA
....4	C1716	2203-000189	C-CER,CHIP;100nF,+80-20%,25V,Y5V,1608	1	SA
....4	C1717	2203-000189	C-CER,CHIP;100nF,+80-20%,25V,Y5V,1608	1	SA
....4	C1718	2203-000189	C-CER,CHIP;100nF,+80-20%,25V,Y5V,1608	1	SA
....4	C1719	2203-000189	C-CER,CHIP;100nF,+80-20%,25V,Y5V,1608	1	SA
....4	C1723	2203-000189	C-CER,CHIP;100nF,+80-20%,25V,Y5V,1608	1	SA
....4	C1724	2203-000189	C-CER,CHIP;100nF,+80-20%,25V,Y5V,1608	1	SA
....4	C1725	2203-000189	C-CER,CHIP;100nF,+80-20%,25V,Y5V,1608	1	SA
....4	C1726	2203-000189	C-CER,CHIP;100nF,+80-20%,25V,Y5V,1608	1	SA
....4	C1727	2203-000189	C-CER,CHIP;100nF,+80-20%,25V,Y5V,1608	1	SA
....4	C1728	2203-000189	C-CER,CHIP;100nF,+80-20%,25V,Y5V,1608	1	SA
....4	C1729	2203-000189	C-CER,CHIP;100nF,+80-20%,25V,Y5V,1608	1	SA
....4	C1733	2203-000189	C-CER,CHIP;100nF,+80-20%,25V,Y5V,1608	1	SA
....4	C1734	2203-000189	C-CER,CHIP;100nF,+80-20%,25V,Y5V,1608	1	SA
....4	C1744	2203-000189	C-CER,CHIP;100nF,+80-20%,25V,Y5V,1608	1	SA
....4	C1747	2203-000189	C-CER,CHIP;100nF,+80-20%,25V,Y5V,1608	1	SA
....4	C1756	2203-000189	C-CER,CHIP;100nF,+80-20%,25V,Y5V,1608	1	SA
....4	C1757	2203-000189	C-CER,CHIP;100nF,+80-20%,25V,Y5V,1608	1	SA
....4	C1758	2203-000189	C-CER,CHIP;100nF,+80-20%,25V,Y5V,1608	1	SA
....4	C1759	2203-000189	C-CER,CHIP;100nF,+80-20%,25V,Y5V,1608	1	SA
....4	C1760	2203-000189	C-CER,CHIP;100nF,+80-20%,25V,Y5V,1608	1	SA
....4	C1761	2203-000189	C-CER,CHIP;100nF,+80-20%,25V,Y5V,1608	1	SA
....4	C1762	2203-000189	C-CER,CHIP;100nF,+80-20%,25V,Y5V,1608	1	SA
....4	C210	2203-000189	C-CER,CHIP;100nF,+80-20%,25V,Y5V,1608	1	SA
....4	C211	2203-000189	C-CER,CHIP;100nF,+80-20%,25V,Y5V,1608	1	SA
....4	C313	2203-000189	C-CER,CHIP;100nF,+80-20%,25V,Y5V,1608	1	SA
....4	C322	2203-000189	C-CER,CHIP;100nF,+80-20%,25V,Y5V,1608	1	SA
....4	C323	2203-000189	C-CER,CHIP;100nF,+80-20%,25V,Y5V,1608	1	SA
....4	C324	2203-000189	C-CER,CHIP;100nF,+80-20%,25V,Y5V,1608	1	SA
....4	C325	2203-000189	C-CER,CHIP;100nF,+80-20%,25V,Y5V,1608	1	SA
....4	C342	2203-000189	C-CER,CHIP;100nF,+80-20%,25V,Y5V,1608	1	SA
....4	C344	2203-000189	C-CER,CHIP;100nF,+80-20%,25V,Y5V,1608	1	SA
....4	C345	2203-000189	C-CER,CHIP;100nF,+80-20%,25V,Y5V,1608	1	SA
....4	C352	2203-000189	C-CER,CHIP;100nF,+80-20%,25V,Y5V,1608	1	SA
....4	C355	2203-000189	C-CER,CHIP;100nF,+80-20%,25V,Y5V,1608	1	SA
....4	C403	2203-000189	C-CER,CHIP;100nF,+80-20%,25V,Y5V,1608	1	SA
....4	C407	2203-000189	C-CER,CHIP;100nF,+80-20%,25V,Y5V,1608	1	SA

Level	Loc. No.	Code No.	Description & Specification	Q'ty	SA/SNA
....4	C412	2203-000189	C-CER,CHIP;100nF,+80-20%,25V,Y5V,1608	1	SA
....4	C429	2203-000189	C-CER,CHIP;100nF,+80-20%,25V,Y5V,1608	1	SA
....4	C501	2203-000189	C-CER,CHIP;100nF,+80-20%,25V,Y5V,1608	1	SA
....4	C502	2203-000189	C-CER,CHIP;100nF,+80-20%,25V,Y5V,1608	1	SA
....4	C504	2203-000189	C-CER,CHIP;100nF,+80-20%,25V,Y5V,1608	1	SA
....4	C508	2203-000189	C-CER,CHIP;100nF,+80-20%,25V,Y5V,1608	1	SA
....4	C517	2203-000189	C-CER,CHIP;100nF,+80-20%,25V,Y5V,1608	1	SA
....4	C521	2203-000189	C-CER,CHIP;100nF,+80-20%,25V,Y5V,1608	1	SA
....4	C528	2203-000189	C-CER,CHIP;100nF,+80-20%,25V,Y5V,1608	1	SA
....4	C533	2203-000189	C-CER,CHIP;100nF,+80-20%,25V,Y5V,1608	1	SA
....4	C539	2203-000189	C-CER,CHIP;100nF,+80-20%,25V,Y5V,1608	1	SA
....4	C703	2203-000189	C-CER,CHIP;100nF,+80-20%,25V,Y5V,1608	1	SA
....4	C704	2203-000189	C-CER,CHIP;100nF,+80-20%,25V,Y5V,1608	1	SA
....4	C705	2203-000189	C-CER,CHIP;100nF,+80-20%,25V,Y5V,1608	1	SA
....4	C706	2203-000189	C-CER,CHIP;100nF,+80-20%,25V,Y5V,1608	1	SA
....4	C709	2203-000189	C-CER,CHIP;100nF,+80-20%,25V,Y5V,1608	1	SA
....4	C802	2203-000189	C-CER,CHIP;100nF,+80-20%,25V,Y5V,1608	1	SA
....4	C804	2203-000189	C-CER,CHIP;100nF,+80-20%,25V,Y5V,1608	1	SA
....4	C813	2203-000189	C-CER,CHIP;100nF,+80-20%,25V,Y5V,1608	1	SA
....4	C912	2203-000189	C-CER,CHIP;100nF,+80-20%,25V,Y5V,1608	1	SA
....4	C913	2203-000189	C-CER,CHIP;100nF,+80-20%,25V,Y5V,1608	1	SA
....4	C914	2203-000189	C-CER,CHIP;100nF,+80-20%,25V,Y5V,1608	1	SA
....4	C915	2203-000189	C-CER,CHIP;100nF,+80-20%,25V,Y5V,1608	1	SA
....4	C916	2203-000189	C-CER,CHIP;100nF,+80-20%,25V,Y5V,1608	1	SA
....4	C917	2203-000189	C-CER,CHIP;100nF,+80-20%,25V,Y5V,1608	1	SA
....4	C918	2203-000189	C-CER,CHIP;100nF,+80-20%,25V,Y5V,1608	1	SA
....4	C919	2203-000189	C-CER,CHIP;100nF,+80-20%,25V,Y5V,1608	1	SA
....4	C920	2203-000189	C-CER,CHIP;100nF,+80-20%,25V,Y5V,1608	1	SA
....4	C921	2203-000189	C-CER,CHIP;100nF,+80-20%,25V,Y5V,1608	1	SA
....4	C922	2203-000189	C-CER,CHIP;100nF,+80-20%,25V,Y5V,1608	1	SA
....4	C923	2203-000189	C-CER,CHIP;100nF,+80-20%,25V,Y5V,1608	1	SA
....4	C924	2203-000189	C-CER,CHIP;100nF,+80-20%,25V,Y5V,1608	1	SA
....4	C925	2203-000189	C-CER,CHIP;100nF,+80-20%,25V,Y5V,1608	1	SA
....4	C926	2203-000189	C-CER,CHIP;100nF,+80-20%,25V,Y5V,1608	1	SA
....4	C927	2203-000189	C-CER,CHIP;100nF,+80-20%,25V,Y5V,1608	1	SA
....4	C928	2203-000189	C-CER,CHIP;100nF,+80-20%,25V,Y5V,1608	1	SA
....4	C929	2203-000189	C-CER,CHIP;100nF,+80-20%,25V,Y5V,1608	1	SA
....4	C930	2203-000189	C-CER,CHIP;100nF,+80-20%,25V,Y5V,1608	1	SA
....4	C931	2203-000189	C-CER,CHIP;100nF,+80-20%,25V,Y5V,1608	1	SA
....4	C932	2203-000189	C-CER,CHIP;100nF,+80-20%,25V,Y5V,1608	1	SA
....4	C933	2203-000189	C-CER,CHIP;100nF,+80-20%,25V,Y5V,1608	1	SA
....4	C937	2203-000189	C-CER,CHIP;100nF,+80-20%,25V,Y5V,1608	1	SA
....4	C433	2203-000236	C-CER,CHIP;0.1nF,5%,50V,C0G,1608	1	SA
....4	C604	2203-000236	C-CER,CHIP;0.1nF,5%,50V,C0G,1608	1	SA
....4	C609	2203-000236	C-CER,CHIP;0.1nF,5%,50V,C0G,1608	1	SA
....4	C806	2203-000236	C-CER,CHIP;0.1nF,5%,50V,C0G,1608	1	SA
....4	C807	2203-000236	C-CER,CHIP;0.1nF,5%,50V,C0G,1608	1	SA
....4	C818	2203-000236	C-CER,CHIP;0.1nF,5%,50V,C0G,1608	1	SA
....4	C1006	2203-000257	C-CER,CHIP;10nF,10%,50V,X7R,1608	1	SA
....4	C101	2203-000257	C-CER,CHIP;10nF,10%,50V,X7R,1608	1	SA
....4	C1015	2203-000257	C-CER,CHIP;10nF,10%,50V,X7R,1608	1	SA
....4	C1019	2203-000257	C-CER,CHIP;10nF,10%,50V,X7R,1608	1	SA
....4	C102	2203-000257	C-CER,CHIP;10nF,10%,50V,X7R,1608	1	SA
....4	C1022	2203-000257	C-CER,CHIP;10nF,10%,50V,X7R,1608	1	SA
....4	C1027	2203-000257	C-CER,CHIP;10nF,10%,50V,X7R,1608	1	SA
....4	C104	2203-000257	C-CER,CHIP;10nF,10%,50V,X7R,1608	1	SA
....4	C114	2203-000257	C-CER,CHIP;10nF,10%,50V,X7R,1608	1	SA
....4	C118	2203-000257	C-CER,CHIP;10nF,10%,50V,X7R,1608	1	SA
....4	C1208	2203-000257	C-CER,CHIP;10nF,10%,50V,X7R,1608	1	SA
....4	C1209	2203-000257	C-CER,CHIP;10nF,10%,50V,X7R,1608	1	SA
....4	C1210	2203-000257	C-CER,CHIP;10nF,10%,50V,X7R,1608	1	SA
....4	C1211	2203-000257	C-CER,CHIP;10nF,10%,50V,X7R,1608	1	SA
....4	C1212	2203-000257	C-CER,CHIP;10nF,10%,50V,X7R,1608	1	SA
....4	C1218	2203-000257	C-CER,CHIP;10nF,10%,50V,X7R,1608	1	SA
....4	C1219	2203-000257	C-CER,CHIP;10nF,10%,50V,X7R,1608	1	SA
....4	C1222	2203-000257	C-CER,CHIP;10nF,10%,50V,X7R,1608	1	SA
....4	C127	2203-000257	C-CER,CHIP;10nF,10%,50V,X7R,1608	1	SA
....4	C1314	2203-000257	C-CER,CHIP;10nF,10%,50V,X7R,1608	1	SA
....4	C132	2203-000257	C-CER,CHIP;10nF,10%,50V,X7R,1608	1	SA
....4	C149	2203-000257	C-CER,CHIP;10nF,10%,50V,X7R,1608	1	SA
....4	C1603	2203-000257	C-CER,CHIP;10nF,10%,50V,X7R,1608	1	SA
....4	C1605	2203-000257	C-CER,CHIP;10nF,10%,50V,X7R,1608	1	SA

Level	Loc. No.	Code No.	Description & Specification	Q'ty	SA/SNA
....4	C1710	2203-000257	C-CER,CHIP;10nF,10%,50V,X7R,1608	1	SA
....4	C1711	2203-000257	C-CER,CHIP;10nF,10%,50V,X7R,1608	1	SA
....4	C1712	2203-000257	C-CER,CHIP;10nF,10%,50V,X7R,1608	1	SA
....4	C1720	2203-000257	C-CER,CHIP;10nF,10%,50V,X7R,1608	1	SA
....4	C1721	2203-000257	C-CER,CHIP;10nF,10%,50V,X7R,1608	1	SA
....4	C1722	2203-000257	C-CER,CHIP;10nF,10%,50V,X7R,1608	1	SA
....4	C1730	2203-000257	C-CER,CHIP;10nF,10%,50V,X7R,1608	1	SA
....4	C1731	2203-000257	C-CER,CHIP;10nF,10%,50V,X7R,1608	1	SA
....4	C1732	2203-000257	C-CER,CHIP;10nF,10%,50V,X7R,1608	1	SA
....4	C1763	2203-000257	C-CER,CHIP;10nF,10%,50V,X7R,1608	1	SA
....4	C1764	2203-000257	C-CER,CHIP;10nF,10%,50V,X7R,1608	1	SA
....4	C1765	2203-000257	C-CER,CHIP;10nF,10%,50V,X7R,1608	1	SA
....4	C213	2203-000257	C-CER,CHIP;10nF,10%,50V,X7R,1608	1	SA
....4	C318	2203-000257	C-CER,CHIP;10nF,10%,50V,X7R,1608	1	SA
....4	C511	2203-000257	C-CER,CHIP;10nF,10%,50V,X7R,1608	1	SA
....4	C520	2203-000257	C-CER,CHIP;10nF,10%,50V,X7R,1608	1	SA
....4	C532	2203-000257	C-CER,CHIP;10nF,10%,50V,X7R,1608	1	SA
....4	C707	2203-000257	C-CER,CHIP;10nF,10%,50V,X7R,1608	1	SA
....4	C713	2203-000257	C-CER,CHIP;10nF,10%,50V,X7R,1608	1	SA
....4	C714	2203-000257	C-CER,CHIP;10nF,10%,50V,X7R,1608	1	SA
....4	C716	2203-000257	C-CER,CHIP;10nF,10%,50V,X7R,1608	1	SA
....4	C906	2203-000257	C-CER,CHIP;10nF,10%,50V,X7R,1608	1	SA
....4	C907	2203-000257	C-CER,CHIP;10nF,10%,50V,X7R,1608	1	SA
....4	C908	2203-000257	C-CER,CHIP;10nF,10%,50V,X7R,1608	1	SA
....4	C909	2203-000257	C-CER,CHIP;10nF,10%,50V,X7R,1608	1	SA
....4	C910	2203-000257	C-CER,CHIP;10nF,10%,50V,X7R,1608	1	SA
....4	C319	2203-000357	C-CER,CHIP;0.15nF,5%,50V,C0G,1608	1	SA
....4	C145	2203-000405	C-CER,CHIP;0.18nF,5%,50V,C0G,1608	1	SA
....4	C146	2203-000405	C-CER,CHIP;0.18nF,5%,50V,C0G,1608	1	SA
....4	C901	2203-000426	C-CER,CHIP;0.018nF,5%,50V,C0G,1608	1	SA
....4	C905	2203-000426	C-CER,CHIP;0.018nF,5%,50V,C0G,1608	1	SA
....4	C1003	2203-000440	C-CER,CHIP;1nF,10%,50V,X7R,1608	1	SA
....4	C1007	2203-000440	C-CER,CHIP;1nF,10%,50V,X7R,1608	1	SA
....4	C1016	2203-000440	C-CER,CHIP;1nF,10%,50V,X7R,1608	1	SA
....4	C1020	2203-000440	C-CER,CHIP;1nF,10%,50V,X7R,1608	1	SA
....4	C1021	2203-000440	C-CER,CHIP;1nF,10%,50V,X7R,1608	1	SA
....4	C1304	2203-000440	C-CER,CHIP;1nF,10%,50V,X7R,1608	1	SA
....4	C1308	2203-000440	C-CER,CHIP;1nF,10%,50V,X7R,1608	1	SA
....4	C206	2203-000440	C-CER,CHIP;1nF,10%,50V,X7R,1608	1	SA
....4	C404	2203-000440	C-CER,CHIP;1nF,10%,50V,X7R,1608	1	SA
....4	C405	2203-000440	C-CER,CHIP;1nF,10%,50V,X7R,1608	1	SA
....4	C431	2203-000440	C-CER,CHIP;1nF,10%,50V,X7R,1608	1	SA
....4	C432	2203-000440	C-CER,CHIP;1nF,10%,50V,X7R,1608	1	SA
....4	C540	2203-000440	C-CER,CHIP;1nF,10%,50V,X7R,1608	1	SA
....4	C535	2203-000491	C-CER,CHIP;2.2nF,10%,50V,X7R,1608	1	SA
....4	C1123	2203-000531	C-CER,CHIP;2.7nF,10%,50V,X7R,1608	1	SA
....4	C1131	2203-000531	C-CER,CHIP;2.7nF,10%,50V,X7R,1608	1	SA
....4	C207	2203-000626	C-CER,CHIP;0.022nF,5%,50V,C0G,1608	1	SA
....4	C208	2203-000626	C-CER,CHIP;0.022nF,5%,50V,C0G,1608	1	SA
....4	C1303	2203-000681	C-CER,CHIP;0.027nF,5%,50V,C0G,1608	1	SA
....4	C1305	2203-000681	C-CER,CHIP;0.027nF,5%,50V,C0G,1608	1	SA
....4	C331	2203-000681	C-CER,CHIP;0.027nF,5%,50V,C0G,1608	1	SA
....4	C340	2203-000681	C-CER,CHIP;0.027nF,5%,50V,C0G,1608	1	SA
....4	C147	2203-000715	C-CER,CHIP;3.3nF,10%,50V,X7R,1608	1	SA
....4	C148	2203-000715	C-CER,CHIP;3.3nF,10%,50V,X7R,1608	1	SA
....4	C413	2203-000783	C-CER,CHIP;0.33nF,5%,50V,C0G,1608	1	SA
....4	C422	2203-000783	C-CER,CHIP;0.33nF,5%,50V,C0G,1608	1	SA
....4	C605	2203-000783	C-CER,CHIP;0.33nF,5%,50V,C0G,1608	1	SA
....4	C606	2203-000783	C-CER,CHIP;0.33nF,5%,50V,C0G,1608	1	SA
....4	C607	2203-000783	C-CER,CHIP;0.33nF,5%,50V,C0G,1608	1	SA
....4	C608	2203-000783	C-CER,CHIP;0.33nF,5%,50V,C0G,1608	1	SA
....4	C610	2203-000783	C-CER,CHIP;0.33nF,5%,50V,C0G,1608	1	SA
....4	C613	2203-000783	C-CER,CHIP;0.33nF,5%,50V,C0G,1608	1	SA
....4	C614	2203-000783	C-CER,CHIP;0.33nF,5%,50V,C0G,1608	1	SA
....4	C711	2203-000783	C-CER,CHIP;0.33nF,5%,50V,C0G,1608	1	SA
....4	C712	2203-000783	C-CER,CHIP;0.33nF,5%,50V,C0G,1608	1	SA
....4	C810	2203-000783	C-CER,CHIP;0.33nF,5%,50V,C0G,1608	1	SA
....4	C811	2203-000783	C-CER,CHIP;0.33nF,5%,50V,C0G,1608	1	SA
....4	C823	2203-000783	C-CER,CHIP;0.33nF,5%,50V,C0G,1608	1	SA
....4	C824	2203-000783	C-CER,CHIP;0.33nF,5%,50V,C0G,1608	1	SA
....4	C353	2203-000798	C-CER,CHIP;33nF,10%,16V,X7R,TP,1608,-	1	SA
....4	C354	2203-000798	C-CER,CHIP;33nF,10%,16V,X7R,TP,1608,-	1	SA

Level	Loc. No.	Code No.	Description & Specification	Q'ty	SA/SNA
....4	C601	2203-000815	C-CER,CHIP;0.033nF,5%,50V,C0G,1608	1	SA
....4	C602	2203-000815	C-CER,CHIP;0.033nF,5%,50V,C0G,1608	1	SA
....4	C603	2203-000815	C-CER,CHIP;0.033nF,5%,50V,C0G,1608	1	SA
....4	C808	2203-000815	C-CER,CHIP;0.033nF,5%,50V,C0G,1608	1	SA
....4	C809	2203-000815	C-CER,CHIP;0.033nF,5%,50V,C0G,1608	1	SA
....4	C1310	2203-000838	C-CER,CHIP;0.39NF,5%,50V,C0G,TP,1608	1	SA
....4	C1203	2203-000888	C-CER,CHIP;4.7nF,10%,50V,X7R,1608	1	SA
....4	C1204	2203-000888	C-CER,CHIP;4.7nF,10%,50V,X7R,1608	1	SA
....4	C1205	2203-000888	C-CER,CHIP;4.7nF,10%,50V,X7R,1608	1	SA
....4	C536	2203-000888	C-CER,CHIP;4.7nF,10%,50V,X7R,1608	1	SA
....4	C903	2203-000888	C-CER,CHIP;4.7nF,10%,50V,X7R,1608	1	SA
....4	C904	2203-000888	C-CER,CHIP;4.7nF,10%,50V,X7R,1608	1	SA
....4	C329	2203-000972	C-CER,CHIP;47nF,10%,16V,X7R,1608	1	SA
....4	C527	2203-000972	C-CER,CHIP;47nF,10%,16V,X7R,1608	1	SA
....4	C934	2203-000972	C-CER,CHIP;47nF,10%,16V,X7R,1608	1	SA
....4	C715	2203-000998	C-CER,CHIP;0.047nF,5%,50V,C0G,1608	1	SA
....4	C1405	2203-001397	C-CER,CHIP;2.2nF,5%,50V,NP0,1608	1	SA
....4	C1406	2203-001397	C-CER,CHIP;2.2nF,5%,50V,NP0,1608	1	SA
....4	C320	2203-001402	C-CER,CHIP;220nF,+80-20%,16V,Y5V,TP,1608	1	SA
....4	C1309	2203-001554	C-CER,CHIP;1.8nF,10%,50V,X7R,1608	1	SA
....4	C434	2203-001607	C-CER,CHIP;0.22nF,5%,50V,NP0,1608	1	SA
....4	C531	2203-001607	C-CER,CHIP;0.22nF,5%,50V,NP0,1608	1	SA
....4	C1312	2203-001630	C-CER,CHIP;330nF,+80-20%,16V,Y5V,1608	1	SA
....4	C316	2203-001656	C-CER,CHIP;0.47nF,5%,50V,NP0,1608	1	SA
....4	C326	2203-001656	C-CER,CHIP;0.47nF,5%,50V,NP0,1608	1	SA
....4	C368	2203-001724	C-CER,CHIP;4700nF,+80-20%,16V,Y5V,3216	1	SA
....4	C1005	2203-005005	C-CER,CHIP;100nF,10%,16V,X7R,1608	1	SA
....4	C1009	2203-005005	C-CER,CHIP;100nF,10%,16V,X7R,1608	1	SA
....4	C1010	2203-005005	C-CER,CHIP;100nF,10%,16V,X7R,1608	1	SA
....4	C1014	2203-005005	C-CER,CHIP;100nF,10%,16V,X7R,1608	1	SA
....4	C1018	2203-005005	C-CER,CHIP;100nF,10%,16V,X7R,1608	1	SA
....4	C1023	2203-005005	C-CER,CHIP;100nF,10%,16V,X7R,1608	1	SA
....4	C1026	2203-005005	C-CER,CHIP;100nF,10%,16V,X7R,1608	1	SA
....4	C1030	2203-005005	C-CER,CHIP;100nF,10%,16V,X7R,1608	1	SA
....4	C109	2203-005005	C-CER,CHIP;100nF,10%,16V,X7R,1608	1	SA
....4	C1101	2203-005005	C-CER,CHIP;100nF,10%,16V,X7R,1608	1	SA
....4	C1104	2203-005005	C-CER,CHIP;100nF,10%,16V,X7R,1608	1	SA
....4	C111	2203-005005	C-CER,CHIP;100nF,10%,16V,X7R,1608	1	SA
....4	C1152	2203-005005	C-CER,CHIP;100nF,10%,16V,X7R,1608	1	SA
....4	C1153	2203-005005	C-CER,CHIP;100nF,10%,16V,X7R,1608	1	SA
....4	C1201	2203-005005	C-CER,CHIP;100nF,10%,16V,X7R,1608	1	SA
....4	C1202	2203-005005	C-CER,CHIP;100nF,10%,16V,X7R,1608	1	SA
....4	C1206	2203-005005	C-CER,CHIP;100nF,10%,16V,X7R,1608	1	SA
....4	C1207	2203-005005	C-CER,CHIP;100nF,10%,16V,X7R,1608	1	SA
....4	C121	2203-005005	C-CER,CHIP;100nF,10%,16V,X7R,1608	1	SA
....4	C1216	2203-005005	C-CER,CHIP;100nF,10%,16V,X7R,1608	1	SA
....4	C1217	2203-005005	C-CER,CHIP;100nF,10%,16V,X7R,1608	1	SA
....4	C125	2203-005005	C-CER,CHIP;100nF,10%,16V,X7R,1608	1	SA
....4	C126	2203-005005	C-CER,CHIP;100nF,10%,16V,X7R,1608	1	SA
....4	C129	2203-005005	C-CER,CHIP;100nF,10%,16V,X7R,1608	1	SA
....4	C1306	2203-005005	C-CER,CHIP;100nF,10%,16V,X7R,1608	1	SA
....4	C1313	2203-005005	C-CER,CHIP;100nF,10%,16V,X7R,1608	1	SA
....4	C1315	2203-005005	C-CER,CHIP;100nF,10%,16V,X7R,1608	1	SA
....4	C134	2203-005005	C-CER,CHIP;100nF,10%,16V,X7R,1608	1	SA
....4	C136	2203-005005	C-CER,CHIP;100nF,10%,16V,X7R,1608	1	SA
....4	C141	2203-005005	C-CER,CHIP;100nF,10%,16V,X7R,1608	1	SA
....4	C144	2203-005005	C-CER,CHIP;100nF,10%,16V,X7R,1608	1	SA
....4	C1501	2203-005005	C-CER,CHIP;100nF,10%,16V,X7R,1608	1	SA
....4	C1502	2203-005005	C-CER,CHIP;100nF,10%,16V,X7R,1608	1	SA
....4	C1505	2203-005005	C-CER,CHIP;100nF,10%,16V,X7R,1608	1	SA
....4	C1506	2203-005005	C-CER,CHIP;100nF,10%,16V,X7R,1608	1	SA
....4	C1507	2203-005005	C-CER,CHIP;100nF,10%,16V,X7R,1608	1	SA
....4	C1508	2203-005005	C-CER,CHIP;100nF,10%,16V,X7R,1608	1	SA
....4	C1509	2203-005005	C-CER,CHIP;100nF,10%,16V,X7R,1608	1	SA
....4	C1510	2203-005005	C-CER,CHIP;100nF,10%,16V,X7R,1608	1	SA
....4	C1511	2203-005005	C-CER,CHIP;100nF,10%,16V,X7R,1608	1	SA
....4	C1512	2203-005005	C-CER,CHIP;100nF,10%,16V,X7R,1608	1	SA
....4	C1513	2203-005005	C-CER,CHIP;100nF,10%,16V,X7R,1608	1	SA
....4	C1514	2203-005005	C-CER,CHIP;100nF,10%,16V,X7R,1608	1	SA
....4	C1515	2203-005005	C-CER,CHIP;100nF,10%,16V,X7R,1608	1	SA
....4	C1516	2203-005005	C-CER,CHIP;100nF,10%,16V,X7R,1608	1	SA
....4	C1518	2203-005005	C-CER,CHIP;100nF,10%,16V,X7R,1608	1	SA

Level	Loc. No.	Code No.	Description & Specification	Q'ty	SA/SNA
....4	C1519	2203-005005	C-CER,CHIP;100nF,10%,16V,X7R,1608	1	SA
....4	C158	2203-005005	C-CER,CHIP;100nF,10%,16V,X7R,1608	1	SA
....4	C159	2203-005005	C-CER,CHIP;100nF,10%,16V,X7R,1608	1	SA
....4	C1602	2203-005005	C-CER,CHIP;100nF,10%,16V,X7R,1608	1	SA
....4	C1604	2203-005005	C-CER,CHIP;100nF,10%,16V,X7R,1608	1	SA
....4	C1606	2203-005005	C-CER,CHIP;100nF,10%,16V,X7R,1608	1	SA
....4	C1607	2203-005005	C-CER,CHIP;100nF,10%,16V,X7R,1608	1	SA
....4	C1609	2203-005005	C-CER,CHIP;100nF,10%,16V,X7R,1608	1	SA
....4	C1611	2203-005005	C-CER,CHIP;100nF,10%,16V,X7R,1608	1	SA
....4	C1748	2203-005005	C-CER,CHIP;100nF,10%,16V,X7R,1608	1	SA
....4	C1749	2203-005005	C-CER,CHIP;100nF,10%,16V,X7R,1608	1	SA
....4	C1750	2203-005005	C-CER,CHIP;100nF,10%,16V,X7R,1608	1	SA
....4	C1751	2203-005005	C-CER,CHIP;100nF,10%,16V,X7R,1608	1	SA
....4	C1752	2203-005005	C-CER,CHIP;100nF,10%,16V,X7R,1608	1	SA
....4	C1753	2203-005005	C-CER,CHIP;100nF,10%,16V,X7R,1608	1	SA
....4	C1754	2203-005005	C-CER,CHIP;100nF,10%,16V,X7R,1608	1	SA
....4	C1755	2203-005005	C-CER,CHIP;100nF,10%,16V,X7R,1608	1	SA
....4	C1767	2203-005005	C-CER,CHIP;100nF,10%,16V,X7R,1608	1	SA
....4	C1771	2203-005005	C-CER,CHIP;100nF,10%,16V,X7R,1608	1	SA
....4	C1772	2203-005005	C-CER,CHIP;100nF,10%,16V,X7R,1608	1	SA
....4	C1773	2203-005005	C-CER,CHIP;100nF,10%,16V,X7R,1608	1	SA
....4	C1774	2203-005005	C-CER,CHIP;100nF,10%,16V,X7R,1608	1	SA
....4	C1775	2203-005005	C-CER,CHIP;100nF,10%,16V,X7R,1608	1	SA
....4	C1776	2203-005005	C-CER,CHIP;100nF,10%,16V,X7R,1608	1	SA
....4	C1777	2203-005005	C-CER,CHIP;100nF,10%,16V,X7R,1608	1	SA
....4	C1778	2203-005005	C-CER,CHIP;100nF,10%,16V,X7R,1608	1	SA
....4	C1779	2203-005005	C-CER,CHIP;100nF,10%,16V,X7R,1608	1	SA
....4	C1780	2203-005005	C-CER,CHIP;100nF,10%,16V,X7R,1608	1	SA
....4	C1781	2203-005005	C-CER,CHIP;100nF,10%,16V,X7R,1608	1	SA
....4	C1782	2203-005005	C-CER,CHIP;100nF,10%,16V,X7R,1608	1	SA
....4	C1783	2203-005005	C-CER,CHIP;100nF,10%,16V,X7R,1608	1	SA
....4	C1784	2203-005005	C-CER,CHIP;100nF,10%,16V,X7R,1608	1	SA
....4	C1785	2203-005005	C-CER,CHIP;100nF,10%,16V,X7R,1608	1	SA
....4	C1786	2203-005005	C-CER,CHIP;100nF,10%,16V,X7R,1608	1	SA
....4	C1787	2203-005005	C-CER,CHIP;100nF,10%,16V,X7R,1608	1	SA
....4	C1788	2203-005005	C-CER,CHIP;100nF,10%,16V,X7R,1608	1	SA
....4	C1789	2203-005005	C-CER,CHIP;100nF,10%,16V,X7R,1608	1	SA
....4	C1790	2203-005005	C-CER,CHIP;100nF,10%,16V,X7R,1608	1	SA
....4	C1791	2203-005005	C-CER,CHIP;100nF,10%,16V,X7R,1608	1	SA
....4	C1792	2203-005005	C-CER,CHIP;100nF,10%,16V,X7R,1608	1	SA
....4	C1793	2203-005005	C-CER,CHIP;100nF,10%,16V,X7R,1608	1	SA
....4	C202	2203-005005	C-CER,CHIP;100nF,10%,16V,X7R,1608	1	SA
....4	C205	2203-005005	C-CER,CHIP;100nF,10%,16V,X7R,1608	1	SA
....4	C209	2203-005005	C-CER,CHIP;100nF,10%,16V,X7R,1608	1	SA
....4	C302	2203-005005	C-CER,CHIP;100nF,10%,16V,X7R,1608	1	SA
....4	C332	2203-005005	C-CER,CHIP;100nF,10%,16V,X7R,1608	1	SA
....4	C350	2203-005005	C-CER,CHIP;100nF,10%,16V,X7R,1608	1	SA
....4	C356	2203-005005	C-CER,CHIP;100nF,10%,16V,X7R,1608	1	SA
....4	C357	2203-005005	C-CER,CHIP;100nF,10%,16V,X7R,1608	1	SA
....4	C358	2203-005005	C-CER,CHIP;100nF,10%,16V,X7R,1608	1	SA
....4	C359	2203-005005	C-CER,CHIP;100nF,10%,16V,X7R,1608	1	SA
....4	C361	2203-005005	C-CER,CHIP;100nF,10%,16V,X7R,1608	1	SA
....4	C365	2203-005005	C-CER,CHIP;100nF,10%,16V,X7R,1608	1	SA
....4	C370	2203-005005	C-CER,CHIP;100nF,10%,16V,X7R,1608	1	SA
....4	C371	2203-005005	C-CER,CHIP;100nF,10%,16V,X7R,1608	1	SA
....4	C372	2203-005005	C-CER,CHIP;100nF,10%,16V,X7R,1608	1	SA
....4	C373	2203-005005	C-CER,CHIP;100nF,10%,16V,X7R,1608	1	SA
....4	C421	2203-005005	C-CER,CHIP;100nF,10%,16V,X7R,1608	1	SA
....4	C506	2203-005005	C-CER,CHIP;100nF,10%,16V,X7R,1608	1	SA
....4	C611	2203-005005	C-CER,CHIP;100nF,10%,16V,X7R,1608	1	SA
....4	C701	2203-005005	C-CER,CHIP;100nF,10%,16V,X7R,1608	1	SA
....4	C710	2203-005005	C-CER,CHIP;100nF,10%,16V,X7R,1608	1	SA
....4	C805	2203-005005	C-CER,CHIP;100nF,10%,16V,X7R,1608	1	SA
....4	C814	2203-005005	C-CER,CHIP;100nF,10%,16V,X7R,1608	1	SA
....4	C817	2203-005005	C-CER,CHIP;100nF,10%,16V,X7R,1608	1	SA
....4	C819	2203-005005	C-CER,CHIP;100nF,10%,16V,X7R,1608	1	SA
....4	C821	2203-005005	C-CER,CHIP;100nF,10%,16V,X7R,1608	1	SA
....4	C902	2203-005005	C-CER,CHIP;100nF,10%,16V,X7R,1608	1	SA
....4	C414	2203-005030	C-CER,CHIP;470nF,+80-20%,50V,Y5V,TP,3216	1	SA
....4	C423	2203-005030	C-CER,CHIP;470nF,+80-20%,50V,Y5V,TP,3216	1	SA
....4	C1001	2203-005065	C-CER,CHIP;1000nF,+80-20%,10V,Y5V,1608	1	SA
....4	C1002	2203-005065	C-CER,CHIP;1000nF,+80-20%,10V,Y5V,1608	1	SA

Level	Loc. No.	Code No.	Description & Specification	Q'ty	SA/SNA
....4	C1004	2203-005065	C-CER,CHIP;1000nF,+80-20%,10V,Y5V,1608	1	SA
....4	C1008	2203-005065	C-CER,CHIP;1000nF,+80-20%,10V,Y5V,1608	1	SA
....4	C1013	2203-005065	C-CER,CHIP;1000nF,+80-20%,10V,Y5V,1608	1	SA
....4	C1017	2203-005065	C-CER,CHIP;1000nF,+80-20%,10V,Y5V,1608	1	SA
....4	C1024	2203-005065	C-CER,CHIP;1000nF,+80-20%,10V,Y5V,1608	1	SA
....4	C1025	2203-005065	C-CER,CHIP;1000nF,+80-20%,10V,Y5V,1608	1	SA
....4	C122	2203-005065	C-CER,CHIP;1000nF,+80-20%,10V,Y5V,1608	1	SA
....4	C212	2203-005065	C-CER,CHIP;1000nF,+80-20%,10V,Y5V,1608	1	SA
....4	C425	2203-005065	C-CER,CHIP;1000nF,+80-20%,10V,Y5V,1608	1	SA
....4	C402	2203-005249	C-CER,CHIP;100nF,10%,50V,X7R,1608	1	SA
....4	C406	2203-005249	C-CER,CHIP;100nF,10%,50V,X7R,1608	1	SA
....4	C408	2203-005249	C-CER,CHIP;100nF,10%,50V,X7R,1608	1	SA
....4	C410	2203-005249	C-CER,CHIP;100nF,10%,50V,X7R,1608	1	SA
....4	C415	2203-005249	C-CER,CHIP;100nF,10%,50V,X7R,1608	1	SA
....4	C416	2203-005249	C-CER,CHIP;100nF,10%,50V,X7R,1608	1	SA
....4	C417	2203-005249	C-CER,CHIP;100nF,10%,50V,X7R,1608	1	SA
....4	C418	2203-005249	C-CER,CHIP;100nF,10%,50V,X7R,1608	1	SA
....4	C419	2203-005249	C-CER,CHIP;100nF,10%,50V,X7R,1608	1	SA
....4	C420	2203-005249	C-CER,CHIP;100nF,10%,50V,X7R,1608	1	SA
....4	C424	2203-005249	C-CER,CHIP;100nF,10%,50V,X7R,1608	1	SA
....4	C426	2203-005249	C-CER,CHIP;100nF,10%,50V,X7R,1608	1	SA
....4	C427	2203-005249	C-CER,CHIP;100nF,10%,50V,X7R,1608	1	SA
....4	C430	2203-005249	C-CER,CHIP;100nF,10%,50V,X7R,1608	1	SA
....4	C436	2203-005249	C-CER,CHIP;100nF,10%,50V,X7R,1608	1	SA
....4	C530	2203-005249	C-CER,CHIP;100nF,10%,50V,X7R,1608	1	SA
....4	C362	2203-005533	C-CER,CHIP;1000nF,20%,6.3V,X7R,TP,1608	1	SA
....4	C367	2203-005533	C-CER,CHIP;1000nF,20%,6.3V,X7R,TP,1608	1	SA
....4	C1031	2203-006333	C-CER,CHIP;10000nF,20%,16V,X5R,TP,3216	1	SA
....4	C1032	2203-006333	C-CER,CHIP;10000nF,20%,16V,X5R,TP,3216	1	SA
....4	C1102	2203-006333	C-CER,CHIP;10000nF,20%,16V,X5R,TP,3216	1	SA
....4	C1105	2203-006333	C-CER,CHIP;10000nF,20%,16V,X5R,TP,3216	1	SA
....4	C1109	2203-006333	C-CER,CHIP;10000nF,20%,16V,X5R,TP,3216	1	SA
....4	C1110	2203-006333	C-CER,CHIP;10000nF,20%,16V,X5R,TP,3216	1	SA
....4	C1114	2203-006333	C-CER,CHIP;10000nF,20%,16V,X5R,TP,3216	1	SA
....4	C1115	2203-006333	C-CER,CHIP;10000nF,20%,16V,X5R,TP,3216	1	SA
....4	C1118	2203-006333	C-CER,CHIP;10000nF,20%,16V,X5R,TP,3216	1	SA
....4	C1119	2203-006333	C-CER,CHIP;10000nF,20%,16V,X5R,TP,3216	1	SA
....4	C1122	2203-006333	C-CER,CHIP;10000nF,20%,16V,X5R,TP,3216	1	SA
....4	C1124	2203-006333	C-CER,CHIP;10000nF,20%,16V,X5R,TP,3216	1	SA
....4	C1130	2203-006333	C-CER,CHIP;10000nF,20%,16V,X5R,TP,3216	1	SA
....4	C1132	2203-006333	C-CER,CHIP;10000nF,20%,16V,X5R,TP,3216	1	SA
....4	C1138	2203-006333	C-CER,CHIP;10000nF,20%,16V,X5R,TP,3216	1	SA
....4	C1139	2203-006333	C-CER,CHIP;10000nF,20%,16V,X5R,TP,3216	1	SA
....4	C1142	2203-006333	C-CER,CHIP;10000nF,20%,16V,X5R,TP,3216	1	SA
....4	C1143	2203-006333	C-CER,CHIP;10000nF,20%,16V,X5R,TP,3216	1	SA
....4	C1146	2203-006333	C-CER,CHIP;10000nF,20%,16V,X5R,TP,3216	1	SA
....4	C1316	2203-006333	C-CER,CHIP;10000nF,20%,16V,X5R,TP,3216	1	SA
....4	C1402	2203-006333	C-CER,CHIP;10000nF,20%,16V,X5R,TP,3216	1	SA
....4	C1608	2203-006333	C-CER,CHIP;10000nF,20%,16V,X5R,TP,3216	1	SA
....4	C1610	2203-006333	C-CER,CHIP;10000nF,20%,16V,X5R,TP,3216	1	SA
....4	C1766	2203-006333	C-CER,CHIP;10000nF,20%,16V,X5R,TP,3216	1	SA
....4	C1768	2203-006333	C-CER,CHIP;10000nF,20%,16V,X5R,TP,3216	1	SA
....4	C1769	2203-006333	C-CER,CHIP;10000nF,20%,16V,X5R,TP,3216	1	SA
....4	C1770	2203-006333	C-CER,CHIP;10000nF,20%,16V,X5R,TP,3216	1	SA
....4	C201	2203-006333	C-CER,CHIP;10000nF,20%,16V,X5R,TP,3216	1	SA
....4	C204	2203-006333	C-CER,CHIP;10000nF,20%,16V,X5R,TP,3216	1	SA
....4	C303	2203-006333	C-CER,CHIP;10000nF,20%,16V,X5R,TP,3216	1	SA
....4	C304	2203-006333	C-CER,CHIP;10000nF,20%,16V,X5R,TP,3216	1	SA
....4	C305	2203-006333	C-CER,CHIP;10000nF,20%,16V,X5R,TP,3216	1	SA
....4	C306	2203-006333	C-CER,CHIP;10000nF,20%,16V,X5R,TP,3216	1	SA
....4	C307	2203-006333	C-CER,CHIP;10000nF,20%,16V,X5R,TP,3216	1	SA
....4	C308	2203-006333	C-CER,CHIP;10000nF,20%,16V,X5R,TP,3216	1	SA
....4	C309	2203-006333	C-CER,CHIP;10000nF,20%,16V,X5R,TP,3216	1	SA
....4	C310	2203-006333	C-CER,CHIP;10000nF,20%,16V,X5R,TP,3216	1	SA
....4	C347	2203-006333	C-CER,CHIP;10000nF,20%,16V,X5R,TP,3216	1	SA
....4	C409	2203-006333	C-CER,CHIP;10000nF,20%,16V,X5R,TP,3216	1	SA
....4	C411	2203-006333	C-CER,CHIP;10000nF,20%,16V,X5R,TP,3216	1	SA
....4	C524	2203-006333	C-CER,CHIP;10000nF,20%,16V,X5R,TP,3216	1	SA
....4	C537	2203-006333	C-CER,CHIP;10000nF,20%,16V,X5R,TP,3216	1	SA
....4	C538	2203-006333	C-CER,CHIP;10000nF,20%,16V,X5R,TP,3216	1	SA
....4	C612	2203-006333	C-CER,CHIP;10000nF,20%,16V,X5R,TP,3216	1	SA
....4	C702	2203-006333	C-CER,CHIP;10000nF,20%,16V,X5R,TP,3216	1	SA

Level	Loc. No.	Code No.	Description & Specification	Q'ty	SA/SNA
....4	C801	2203-006333	C-CER,CHIP;10000nF,20%,16V,X5R,TP,3216	1	SA
....4	C803	2203-006333	C-CER,CHIP;10000nF,20%,16V,X5R,TP,3216	1	SA
....4	C812	2203-006333	C-CER,CHIP;10000nF,20%,16V,X5R,TP,3216	1	SA
....4	C815	2203-006333	C-CER,CHIP;10000nF,20%,16V,X5R,TP,3216	1	SA
....4	C816	2203-006333	C-CER,CHIP;10000nF,20%,16V,X5R,TP,3216	1	SA
....4	C820	2203-006333	C-CER,CHIP;10000nF,20%,16V,X5R,TP,3216	1	SA
....4	C822	2203-006333	C-CER,CHIP;10000nF,20%,16V,X5R,TP,3216	1	SA
....4	C1012	2402-000209	C-AL,SMD;22uF,20%,16V,WT,TP,5.3x5.3mm	1	SA
....4	C108	2402-000209	C-AL,SMD;22uF,20%,16V,WT,TP,5.3x5.3mm	1	SA
....4	C110	2402-000209	C-AL,SMD;22uF,20%,16V,WT,TP,5.3x5.3mm	1	SA
....4	C1106	2402-000209	C-AL,SMD;22uF,20%,16V,WT,TP,5.3x5.3mm	1	SA
....4	C120	2402-000209	C-AL,SMD;22uF,20%,16V,WT,TP,5.3x5.3mm	1	SA
....4	C130	2402-000209	C-AL,SMD;22uF,20%,16V,WT,TP,5.3x5.3mm	1	SA
....4	C1301	2402-000209	C-AL,SMD;22uF,20%,16V,WT,TP,5.3x5.3mm	1	SA
....4	C137	2402-000209	C-AL,SMD;22uF,20%,16V,WT,TP,5.3x5.3mm	1	SA
....4	C138	2402-000209	C-AL,SMD;22uF,20%,16V,WT,TP,5.3x5.3mm	1	SA
....4	C1407	2402-000209	C-AL,SMD;22uF,20%,16V,WT,TP,5.3x5.3mm	1	SA
....4	C1408	2402-000209	C-AL,SMD;22uF,20%,16V,WT,TP,5.3x5.3mm	1	SA
....4	C1412	2402-000209	C-AL,SMD;22uF,20%,16V,WT,TP,5.3x5.3mm	1	SA
....4	C154	2402-000209	C-AL,SMD;22uF,20%,16V,WT,TP,5.3x5.3mm	1	SA
....4	C1794	2402-000209	C-AL,SMD;22uF,20%,16V,WT,TP,5.3x5.3mm	1	SA
....4	C366	2402-000209	C-AL,SMD;22uF,20%,16V,WT,TP,5.3x5.3mm	1	SA
....4	C503	2402-000209	C-AL,SMD;22uF,20%,16V,WT,TP,5.3x5.3mm	1	SA
....4	C516	2402-000209	C-AL,SMD;22uF,20%,16V,WT,TP,5.3x5.3mm	1	SA
....4	C911	2402-000209	C-AL,SMD;22uF,20%,16V,WT,TP,5.3x5.3mm	1	SA
....4	C106	2402-001081	C-AL,SMD;100uF,20%,25V,WT,TP,8.3x8.3x10	1	SA
....4	C112	2402-001081	C-AL,SMD;100uF,20%,25V,WT,TP,8.3x8.3x10	1	SA
....4	C113	2402-001081	C-AL,SMD;100uF,20%,25V,WT,TP,8.3x8.3x10	1	SA
....4	C119	2402-001081	C-AL,SMD;100uF,20%,25V,WT,TP,8.3x8.3x10	1	SA
....4	C139	2402-001081	C-AL,SMD;100uF,20%,25V,WT,TP,8.3x8.3x10	1	SA
....4	C140	2402-001081	C-AL,SMD;100uF,20%,25V,WT,TP,8.3x8.3x10	1	SA
....4	C142	2402-001081	C-AL,SMD;100uF,20%,25V,WT,TP,8.3x8.3x10	1	SA
....4	C143	2402-001081	C-AL,SMD;100uF,20%,25V,WT,TP,8.3x8.3x10	1	SA
....4	C160	2402-001081	C-AL,SMD;100uF,20%,25V,WT,TP,8.3x8.3x10	1	SA
....4	C1011	2402-001086	C-AL,SMD;100UF,20%,16V,WT,TP,6.6X6.6X5.3	1	SA
....4	C1103	2402-001086	C-AL,SMD;100UF,20%,16V,WT,TP,6.6X6.6X5.3	1	SA
....4	C115	2402-001086	C-AL,SMD;100UF,20%,16V,WT,TP,6.6X6.6X5.3	1	SA
....4	C1213	2402-001086	C-AL,SMD;100UF,20%,16V,WT,TP,6.6X6.6X5.3	1	SA
....4	C1214	2402-001086	C-AL,SMD;100UF,20%,16V,WT,TP,6.6X6.6X5.3	1	SA
....4	C1215	2402-001086	C-AL,SMD;100UF,20%,16V,WT,TP,6.6X6.6X5.3	1	SA
....4	C1404	2402-001086	C-AL,SMD;100UF,20%,16V,WT,TP,6.6X6.6X5.3	1	SA
....4	C1503	2402-001086	C-AL,SMD;100UF,20%,16V,WT,TP,6.6X6.6X5.3	1	SA
....4	C1504	2402-001086	C-AL,SMD;100UF,20%,16V,WT,TP,6.6X6.6X5.3	1	SA
....4	C151	2402-001086	C-AL,SMD;100UF,20%,16V,WT,TP,6.6X6.6X5.3	1	SA
....4	C156	2402-001086	C-AL,SMD;100UF,20%,16V,WT,TP,6.6X6.6X5.3	1	SA
....4	C1601	2402-001086	C-AL,SMD;100UF,20%,16V,WT,TP,6.6X6.6X5.3	1	SA
....4	C1795	2402-001086	C-AL,SMD;100UF,20%,16V,WT,TP,6.6X6.6X5.3	1	SA
....4	C360	2402-001086	C-AL,SMD;100UF,20%,16V,WT,TP,6.6X6.6X5.3	1	SA
....4	C363	2402-001086	C-AL,SMD;100UF,20%,16V,WT,TP,6.6X6.6X5.3	1	SA
....4	C505	2402-001086	C-AL,SMD;100UF,20%,16V,WT,TP,6.6X6.6X5.3	1	SA
....4	C507	2402-001086	C-AL,SMD;100UF,20%,16V,WT,TP,6.6X6.6X5.3	1	SA
....4	C1220	2402-001097	C-AL,SMD;0.1UF,20%,50V,WT,TP,4.3X4.3X5.2	1	SA
....4	C1221	2402-001097	C-AL,SMD;0.1UF,20%,50V,WT,TP,4.3X4.3X5.2	1	SA
....4	C1151	2402-001128	C-AL,SMD;100UF,20%,16V,WT,TP,6.3X5.7MM	1	SA
....4	C1154	2402-001128	C-AL,SMD;100UF,20%,16V,WT,TP,6.3X5.7MM	1	SA
....4	C1155	2402-001128	C-AL,SMD;100UF,20%,16V,WT,TP,6.3X5.7MM	1	SA
....4	C123	2402-001128	C-AL,SMD;100UF,20%,16V,WT,TP,6.3X5.7MM	1	SA
....4	C133	2402-001128	C-AL,SMD;100UF,20%,16V,WT,TP,6.3X5.7MM	1	SA
....4	C1702	2402-001128	C-AL,SMD;100UF,20%,16V,WT,TP,6.3X5.7MM	1	SA
....4	C1703	2402-001128	C-AL,SMD;100UF,20%,16V,WT,TP,6.3X5.7MM	1	SA
....4	C1704	2402-001128	C-AL,SMD;100UF,20%,16V,WT,TP,6.3X5.7MM	1	SA
....4	C1745	2402-001128	C-AL,SMD;100UF,20%,16V,WT,TP,6.3X5.7MM	1	SA
....4	C1746	2402-001128	C-AL,SMD;100UF,20%,16V,WT,TP,6.3X5.7MM	1	SA
....4	C314	2402-001128	C-AL,SMD;100UF,20%,16V,WT,TP,6.3X5.7MM	1	SA
....4	C375	2402-001128	C-AL,SMD;100UF,20%,16V,WT,TP,6.3X5.7MM	1	SA
....4	C519	2402-001128	C-AL,SMD;100UF,20%,16V,WT,TP,6.3X5.7MM	1	SA
....4	C312	2402-001129	C-AL,SMD;47UF,20%,16V,WT,TP,6.3X5.2MM	1	SA
....4	C321	2402-001129	C-AL,SMD;47UF,20%,16V,WT,TP,6.3X5.2MM	1	SA
....4	C330	2402-001129	C-AL,SMD;47UF,20%,16V,WT,TP,6.3X5.2MM	1	SA
....4	C341	2402-001129	C-AL,SMD;47UF,20%,16V,WT,TP,6.3X5.2MM	1	SA
....4	C374	2402-001129	C-AL,SMD;47UF,20%,16V,WT,TP,6.3X5.2MM	1	SA
....4	C529	2402-001147	C-AL,SMD;3.3UF,20%,50V,WT,TP,4X5.8MM	1	SA

Level	Loc. No.	Code No.	Description & Specification	Q'ty	SA/SNA
....4	C1028	2402-001155	C-AL,SMD;47UF,20%,16V,WT,TP,6.3X5.2MM	1	SA
....4	C1029	2402-001155	C-AL,SMD;47UF,20%,16V,WT,TP,6.3X5.2MM	1	SA
....4	C708	2402-001155	C-AL,SMD;47UF,20%,16V,WT,TP,6.3X5.2MM	1	SA
....4	C369	2402-001160	C-AL,SMD;330UF,20%,16V,WT,TP,1008	1	SA
....4	C311	2402-001178	C-AL,SMD;10uF,20%,16V,WT,TP,4.3x4.3x5.8m	1	SA
....4	C317	2402-001178	C-AL,SMD;10uF,20%,16V,WT,TP,4.3x4.3x5.8m	1	SA
....4	C339	2402-001178	C-AL,SMD;10uF,20%,16V,WT,TP,4.3x4.3x5.8m	1	SA
....4	C343	2402-001178	C-AL,SMD;10uF,20%,16V,WT,TP,4.3x4.3x5.8m	1	SA
....4	C349	2402-001178	C-AL,SMD;10uF,20%,16V,WT,TP,4.3x4.3x5.8m	1	SA
....4	C351	2402-001178	C-AL,SMD;10uF,20%,16V,WT,TP,4.3x4.3x5.8m	1	SA
....4	C301	2402-001183	C-AL,SMD;22UF,20%,16V,WT,TP,5.3X5.3X6MM	1	SA
....4	C328	2402-001183	C-AL,SMD;22UF,20%,16V,WT,TP,5.3X5.3X6MM	1	SA
....4	C1701	2402-001210	C-POLYMER AL CHIP;100uF,20%,10V,WT,TP,7.	1	SA
....4	C1410	2402-001226	C-AL,SMD;4.7UF,20%,35V,HR,TP,4.3X4.3X5.8	1	SA
....4	C1411	2402-001226	C-AL,SMD;4.7UF,20%,35V,HR,TP,4.3X4.3X5.8	1	SA
....4	C1413	2402-001226	C-AL,SMD;4.7UF,20%,35V,HR,TP,4.3X4.3X5.8	1	SA
....4	C1414	2402-001226	C-AL,SMD;4.7UF,20%,35V,HR,TP,4.3X4.3X5.8	1	SA
....4	C1517	2402-001230	C-AL,SMD;2.2uF,¡¾20%,35V,WT,TP,3*5.2	1	SA
....4	C337	2402-001238	C-AL,SMD;1uF,20%,50V,HR,TP,4.3x4.3x5.2mm	1	SA
....4	C338	2402-001238	C-AL,SMD;1uF,20%,50V,HR,TP,4.3x4.3x5.2mm	1	SA
....4	C346	2402-001238	C-AL,SMD;1uF,20%,50V,HR,TP,4.3x4.3x5.2mm	1	SA
....4	C348	2402-001238	C-AL,SMD;1uF,20%,50V,HR,TP,4.3x4.3x5.2mm	1	SA
....4	C534	2402-001238	C-AL,SMD;1uF,20%,50V,HR,TP,4.3x4.3x5.2mm	1	SA
....4	C401	2402-001257	C-AL,SMD;470uF,20%,16V,-,TP,8.3*10	1	SA
....4	C435	2402-001257	C-AL,SMD;470uF,20%,16V,-,TP,8.3*10	1	SA
....4	C1311	2402-001262	C-AL,SMD;47uF,+-20%,6.3V,WT,SMD,5x5.2	1	SA
....4	C128	2409-001029	C-ORGANIC;120uF,20%,6.3V,WT,TP,10.3x10.3	1	SA
....4	C135	2409-001029	C-ORGANIC;120uF,20%,6.3V,WT,TP,10.3x10.3	1	SA
....4	C364	2409-001029	C-ORGANIC;120uF,20%,6.3V,WT,TP,10.3x10.3	1	SA
....4	C518	2409-001118	C-POLYMER ,CHIP;47uF,-+20,10V,WT,REEL,3.	1	SA
....4	T0052	2703-000158	INDUCTOR-SMD;1uH,10%,2012	1	SA
....4	T0052	2703-000398	INDUCTOR-SMD;10uH,10%,3225	1	SA
....4	T0052	2703-000398	INDUCTOR-SMD;10uH,10%,3225	1	SA
....4	T0052	2703-000398	INDUCTOR-SMD;10uH,10%,3225	1	SA
....4	T0052	2703-000398	INDUCTOR-SMD;10uH,10%,3225	1	SA
....4	T0052	2703-000398	INDUCTOR-SMD;10uH,10%,3225	1	SA
....4	T0052	2703-000398	INDUCTOR-SMD;10uH,10%,3225	1	SA
....4	T0052	2703-000398	INDUCTOR-SMD;10uH,10%,3225	1	SA
....4	T0052	2703-000398	INDUCTOR-SMD;10uH,10%,3225	1	SA
....4	T0052	2703-000398	INDUCTOR-SMD;10uH,10%,3225	1	SA
....4	T0052	2703-000398	INDUCTOR-SMD;10uH,10%,3225	1	SA
....4	T0052	2703-000398	INDUCTOR-SMD;10uH,10%,3225	1	SA
....4	T0052	2703-000398	INDUCTOR-SMD;10uH,10%,3225	1	SA
....4	T0052	2703-000398	INDUCTOR-SMD;10uH,10%,3225	1	SA
....4	T0052	2703-000398	INDUCTOR-SMD;10uH,10%,3225	1	SA
....4	T0052	2703-000398	INDUCTOR-SMD;10uH,10%,3225	1	SA
....4	T0052	2703-000398	INDUCTOR-SMD;10uH,10%,3225	1	SA
....4	T0052	2703-000398	INDUCTOR-SMD;10uH,10%,3225	1	SA
....4	T0052	2703-000398	INDUCTOR-SMD;10uH,10%,3225	1	SA
....4	T0052	2703-000398	INDUCTOR-SMD;10uH,10%,3225	1	SA
....4	T0052	2703-000398	INDUCTOR-SMD;10uH,10%,3225	1	SA
....4	T0052	2703-000417	INDUCTOR-SMD;220uH,5%,3225	1	SA
....4	T0052	2703-001426	INDUCTOR-SMD;680uH,20%,7070	1	SA
....4	T0052	2703-001778	INDUCTOR-SMD;3.3uH,20%,3225	1	SA
....4	T0052	2703-001778	INDUCTOR-SMD;3.3uH,20%,3225	1	SA
....4	T0052	2703-002915	INDUCTOR-SMD;22uH,20%,8080	1	SA
....4	T0052	2703-002915	INDUCTOR-SMD;22uH,20%,8080	1	SA
....4	T0052	2703-002915	INDUCTOR-SMD;22uH,20%,8080	1	SA
....4	T0052	2703-002915	INDUCTOR-SMD;22uH,20%,8080	1	SA
....4	X1301	2801-000258	CRYSTAL-SMD;0.032768MHz,20ppm,SMD,12.5pF	1	SA
....4	X201	2801-003326	CRYSTAL-SMD;24MHZ,30PPM,28-ABX,20PF,50OH	1	SA
....4	X301	2801-003954	CRYSTAL-SMD;27MHz,30ppm,28-AAN,16pF,50oh	1	SA
....4	X901	2801-004483	CRYSTAL-SMD;28.322MHz,30ppm,HC-49,20pF,5	1	SA
....4	X1302	2804-001370	OSCILLATOR-CLOCK;48MHz,100ppm,10TTL/CMOS	1	SA
....4	X1303	2806-001308	OSCILLATOR-VCXO;27MHZ,-,30PF,TP,3.3V,50M	1	SA
....4	F103	2901-001114	FILTER-EMI SMD;25VDC,2.0ADC,-,100nF,3.2x	1	SA
....4	T0568	3301-001082	BEAD-SMD;60ohm,3225,TP,43ohm/40MHz,83ohm	1	SNA
....4	T0568	3301-001145	BEAD-SMD;60ohm,4516,TP,70ohm/45MHz,82ohm	1	SNA
....4	T0568	3301-001145	BEAD-SMD;60ohm,4516,TP,70ohm/45MHz,82ohm	1	SNA
....4	T0568	3301-001145	BEAD-SMD;60ohm,4516,TP,70ohm/45MHz,82ohm	1	SNA
....4	T0568	3301-001145	BEAD-SMD;60ohm,4516,TP,70ohm/45MHz,82ohm	1	SNA

Level	Loc. No.	Code No.	Description & Specification	Q'ty	SA/SNA
....4	T0568	3301-001145	BEAD-SMD;60ohm,4516,TP,70ohm/45MHz,82ohm	1	SNA
....4	T0568	3301-001145	BEAD-SMD;60ohm,4516,TP,70ohm/45MHz,82ohm	1	SNA
....4	T0568	3301-001145	BEAD-SMD;60ohm,4516,TP,70ohm/45MHz,82ohm	1	SNA
....4	T0568	3301-001145	BEAD-SMD;60ohm,4516,TP,70ohm/45MHz,82ohm	1	SNA
....4	T0568	3301-001145	BEAD-SMD;60ohm,4516,TP,70ohm/45MHz,82ohm	1	SNA
....4	T0568	3301-001145	BEAD-SMD;60ohm,4516,TP,70ohm/45MHz,82ohm	1	SNA
....4	T0568	3301-001145	BEAD-SMD;60ohm,4516,TP,70ohm/45MHz,82ohm	1	SNA
....4	T0568	3301-001145	BEAD-SMD;60ohm,4516,TP,70ohm/45MHz,82ohm	1	SNA
....4	T0568	3301-001236	BEAD-SMD;60ohm,1608,-,-,-	1	SNA
....4	T0568	3301-001236	BEAD-SMD;60ohm,1608,-,-,-	1	SNA
....4	T0568	3301-001236	BEAD-SMD;60ohm,1608,-,-,-	1	SNA
....4	T0568	3301-001236	BEAD-SMD;60ohm,1608,-,-,-	1	SNA
....4	T0568	3301-001236	BEAD-SMD;60ohm,1608,-,-,-	1	SNA
....4	T0568	3301-001236	BEAD-SMD;60ohm,1608,-,-,-	1	SNA
....4	T0568	3301-001236	BEAD-SMD;60ohm,1608,-,-,-	1	SNA
....4	T0568	3301-001236	BEAD-SMD;60ohm,1608,-,-,-	1	SNA
....4	T0568	3301-001236	BEAD-SMD;60ohm,1608,-,-,-	1	SNA
....4	T0568	3301-001404	BEAD-SMD;30ohm,2012,TP,-,-	1	SA
....4	T0568	3301-001404	BEAD-SMD;30ohm,2012,TP,-,-	1	SA
....4	T0568	3301-001404	BEAD-SMD;30ohm,2012,TP,-,-	1	SA
....4	T0568	3301-001404	BEAD-SMD;30ohm,2012,TP,-,-	1	SA
....4	T0568	3301-001404	BEAD-SMD;30ohm,2012,TP,-,-	1	SA
....4	T0568	3301-001404	BEAD-SMD;30ohm,2012,TP,-,-	1	SA
....4	T0568	3301-001404	BEAD-SMD;30ohm,2012,TP,-,-	1	SA
....4	T0568	3301-001404	BEAD-SMD;30ohm,2012,TP,-,-	1	SA
....4	T0568	3301-001404	BEAD-SMD;30ohm,2012,TP,-,-	1	SA
....4	T0568	3301-001404	BEAD-SMD;30ohm,2012,TP,-,-	1	SA
....4	T0568	3301-001404	BEAD-SMD;30ohm,2012,TP,-,-	1	SA
....4	T0568	3301-001404	BEAD-SMD;30ohm,2012,TP,-,-	1	SA
....4	T0568	3301-001404	BEAD-SMD;30ohm,2012,TP,-,-	1	SA
....4	T0568	3301-001404	BEAD-SMD;30ohm,2012,TP,-,-	1	SA
....4	T0568	3301-001404	BEAD-SMD;30ohm,2012,TP,-,-	1	SA
....4	T0568	3301-001404	BEAD-SMD;30ohm,2012,TP,-,-	1	SA
....4	T0568	3301-001404	BEAD-SMD;30ohm,2012,TP,-,-	1	SA
....4	T0568	3301-001404	BEAD-SMD;30ohm,2012,TP,-,-	1	SA
....4	T0568	3301-001404	BEAD-SMD;30ohm,2012,TP,-,-	1	SA
....4	T0568	3301-001404	BEAD-SMD;30ohm,2012,TP,-,-	1	SA
....4	T0568	3301-001404	BEAD-SMD;30ohm,2012,TP,-,-	1	SA
....4	T0568	3301-001404	BEAD-SMD;30ohm,2012,TP,-,-	1	SA
....4	T0568	3301-001404	BEAD-SMD;30ohm,2012,TP,-,-	1	SA
....4	T0568	3301-001404	BEAD-SMD;30ohm,2012,TP,-,-	1	SA
....4	T0568	3301-001404	BEAD-SMD;30ohm,2012,TP,-,-	1	SA
....4	T0568	3301-001404	BEAD-SMD;30ohm,2012,TP,-,-	1	SA
....4	T0568	3301-001404	BEAD-SMD;30ohm,2012,TP,-,-	1	SA
....4	T0568	3301-001404	BEAD-SMD;30ohm,2012,TP,-,-	1	SA
....4	T0568	3301-001404	BEAD-SMD;30ohm,2012,TP,-,-	1	SA
....4	T0568	3301-001404	BEAD-SMD;30ohm,2012,TP,-,-	1	SA
....4	T0568	3301-001404	BEAD-SMD;30ohm,2012,TP,-,-	1	SA
....4	T0568	3301-001404	BEAD-SMD;30ohm,2012,TP,-,-	1	SA
....4	T0568	3301-001404	BEAD-SMD;30ohm,2012,TP,-,-	1	SA
....4	T0568	3301-001404	BEAD-SMD;30ohm,2012,TP,-,-	1	SA
....4	T0568	3301-001404	BEAD-SMD;30ohm,2012,TP,-,-	1	SA
....4	T0568	3301-001404	BEAD-SMD;30ohm,2012,TP,-,-	1	SA
....4	T0568	3301-001404	BEAD-SMD;30ohm,2012,TP,-,-	1	SA
....4	T0568	3301-001404	BEAD-SMD;30ohm,2012,TP,-,-	1	SA
....4	T0568	3301-001404	BEAD-SMD;30ohm,2012,TP,-,-	1	SA
....4	T0568	3301-001404	BEAD-SMD;30ohm,2012,TP,-,-	1	SA
....4	T0568	3301-001404	BEAD-SMD;30ohm,2012,TP,-,-	1	SA
....4	T0568	3301-001404	BEAD-SMD;30ohm,2012,TP,-,-	1	SA
....4	T0568	3301-001404	BEAD-SMD;30ohm,2012,TP,-,-	1	SA
....4	T0568	3301-001404	BEAD-SMD;30ohm,2012,TP,-,-	1	SA
....4	T0568	3301-001404	BEAD-SMD;30ohm,2012,TP,-,-	1	SA
....4	T0568	3301-001404	BEAD-SMD;30ohm,2012,TP,-,-	1	SA
....4	T0568	3301-001404	BEAD-SMD;30ohm,2012,TP,-,-	1	SA
....4	T0568	3301-001404	BEAD-SMD;30ohm,2012,TP,-,-	1	SA
....4	T0568	3301-001404	BEAD-SMD;30ohm,2012,TP,-,-	1	SA
....4	T0568	3301-001404	BEAD-SMD;30ohm,2012,TP,-,-	1	SA
....4	T0568	3301-001404	BEAD-SMD;30ohm,2012,TP,-,-	1	SA
....4	T0568	3301-001404	BEAD-SMD;30ohm,2012,TP,-,-	1	SA
....4	T0568	3301-001404	BEAD-SMD;30ohm,2012,TP,-,-	1	SA
....4	T0568	3301-001404	BEAD-SMD;30ohm,2012,TP,-,-	1	SA
....4	T0568	3301-001404	BEAD-SMD;30ohm,2012,TP,-,-	1	SA
....4	T0568	3301-001404	BEAD-SMD;30ohm,2012,TP,-,-	1	SA
....4	T0568	3301-001404	BEAD-SMD;30ohm,2012,TP,-,-	1	SA
....4	T0568	3301-001404	BEAD-SMD;30ohm,2012,TP,-,-	1	SA
....4	T0568	3301-001404	BEAD-SMD;30ohm,2012,TP,-,-	1	SA
....4	T0568	3301-001404	BEAD-SMD;30ohm,2012,TP,-,-	1	SA
....4	T0568	3301-001404	BEAD-SMD;30ohm,2012,TP,-,-	1	SA
....4	T0568	3301-001404	BEAD-SMD;30ohm,2012,TP,-,-	1	SA
....4	T0568	3301-001404	BEAD-SMD;30ohm,2012,TP,-,-	1	SA
....4	T0568	3301-001404	BEAD-SMD;30ohm,2012,TP,-,-	1	SA
....4	T0568	3301-001404	BEAD-SMD;30ohm,2012,TP,-,-	1	SA
....4	T0568	3301-001404	BEAD-SMD;30ohm,2012,TP,-,-	1	SA
....4	T0568	3301-001404	BEAD-SMD;30ohm,2012,TP,-,-	1	SA
....4	T0568	3301-001404	BEAD-SMD;30ohm,2012,TP,-,-	1	SA
....4	T0568	3301-001404	BEAD-SMD;30ohm,2012,TP,-,-	1	SA
....4	T0568	3301-001404	BEAD-SMD;30ohm,2012,TP,-,-	1	SA
....4	T0568	3301-001404	BEAD-SMD;30ohm,2012,TP,-,-	1	SA
....4	T0568	3301-001404	BEAD-SMD;30ohm,2012,TP,-,-	1	SA
....4	T0568	3301-001404	BEAD-SMD;30ohm,2012,TP,-,-	1	SA
....4	T0568	3301-001404	BEAD-SMD;30ohm,2012,TP,-,-	1	SA
....4	T0568	3301-001404	BEAD-SMD;30ohm,2012,TP,-,-	1	SA
....4	T0568	3301-001404	BEAD-SMD;30ohm,2012,TP,-,-	1	SA
....4	T0568	3301-001404	BEAD-SMD;30ohm,2012,TP,-,-	1	SA
....4	T0568	3301-001404	BEAD-SMD;30ohm,2012,TP,-,-	1	SA
....4	T0568	3301-001404	BEAD-SMD;30ohm,2012,TP,-,-	1	SA
....4	T0568	3301-001404	BEAD-SMD;30ohm,2012,TP,-,-	1	SA
....4	T0568	3301-001404	BEAD-SMD;30ohm,2012,TP,-,-	1	SA
....4	T0568	3301-001404	BEAD-SMD;30ohm,2012,TP,-,-	1	SA
....4	T0568	3301-001404	BEAD-SMD;30ohm,2012,TP,-,-	1	SA
....4	T0568	3301-001404	BEAD-SMD;30ohm,2012,TP,-,-	1	SA
....4	T0568	3301-001404	BEAD-SMD;30ohm,2012,TP,-,-	1	SA
....4	T0568	3301-001404	BEAD-SMD;30ohm,2012,TP,-,-	1	SA
....4	T0568	3301-001404	BEAD-SMD;30ohm,2012,TP,-,-	1	SA
....4	T0568	3301-001404	BEAD-SMD;30ohm,2012,TP,-,-	1	SA
....4	T0568	3301-001404	BEAD-SMD;30ohm,2012,TP,-,-	1	SA
....4	T0568	3301-001404	BEAD-SMD;30ohm,2012,TP,-,-	1	SA
....4	T0568	3301-001404	BEAD-SMD;30ohm,2012,TP,-,-	1	SA
....4	T0568	3301-001404	BEAD-SMD;30ohm,2012,TP,-,-	1	SA
....4	T0568	3301-001404	BEAD-SMD;30ohm,2012,TP,-,-	1	SA
....4	T0568	3301-001404	BEAD-SMD;30ohm,2012,TP,-,-	1	SA
....4	T0568	3301-001404	BEAD-SMD;30ohm,2012,TP,-,-	1	SA
....4	T0568	3301-001404	BEAD-SMD;30ohm,2012,TP,-,-	1	SA
....4	T0568	3301-001404	BEAD-SMD;30ohm,2012,TP,-,-	1	SA
....4	T0568	3301-001404	BEAD-SMD;30ohm,2012,TP,-,-	1	SA
....4	T0568	3301-001404	BEAD-SMD;30ohm,2012,TP,-,-	1	SA
....4	T0568	3301-001404	BEAD-SMD;30ohm,2012,TP,-,-	1	SA
....4	T0568	3301-001404	BEAD-SMD;30ohm,2012,TP,-,-	1	SA
....4	T0568	3301-001404	BEAD-SMD;30ohm,2012,TP,-,-	1	SA
....4	T0568	3301-001404	BEAD-SMD;30ohm,2012,TP,-,-	1	SA
....4	T0568	3301-001404	BEAD-SMD;30ohm,2012,TP,-,-	1	SA
....4	T0568	3301-001404	BEAD-SMD;30ohm,2012,TP,-,-	1	SA
....4	T0568	3301-001404	BEAD-SMD;30ohm,2012,TP,-,-	1	SA
....4	T0568	3301-001404	BEAD-SMD;30ohm,2012,TP,-,-	1	SA
....4	T0568	3301-001404	BEAD-SMD;30ohm,2012,TP,-,-	1	SA
....4	T0568	3301-001404	BEAD-SMD;30ohm,2012,TP,-,-	1	SA
....4	T0568	3301-001404	BEAD-SMD;30ohm,2012,TP,-,-	1	SA
....4	T0568	3301-001404	BEAD-SMD;30ohm,2012,TP,-,-	1	SA
....4	T0568	3301-001404	BEAD-SMD;30ohm,2012,TP,-,-	1	SA
....4	T0568	3301-001404	BEAD-SMD;30ohm,2012,TP,-,-	1	SA
....4	T0568	3301-001404	BEAD-SMD;30ohm,2012,TP,-,-	1	SA
....4	T0568	3301-001404	BEAD-SMD;30ohm,2012,TP,-,-	1	SA
....4	T0568	3301-001404	BEAD-SMD;30ohm,2012,TP,-,-	1	SA
....4	T0568	3301-001404	BEAD-SMD;30ohm,2012,TP,-,-	1	SA
....4	T0568	3301-001404	BEAD-SMD;30ohm,2012,TP,-,-	1	SA
....4	T0568	3301-001404	BEAD-SMD;30ohm,2012,TP,-,-	1	SA
....4	T0568	3301-001569	BEAD-SMD;600ohm,2012,1000mA,TP,520ohm/90	1	SNA
....4	JA802	3701-001311	CONNECTOR-HDMI;21P,2R,FEMALE,SMD-S,AU30U	1	SA
....4	JA804	3701-001311	CONNECTOR-HDMI;21P,2R,FEMALE,SMD-S,AU30U	1	SA
....4	CN401	3711-005291	HEADER-BOARD TO CABLE;BOX,2P,1R,2MM,SMD-	1	SA
....4	CN402	3711-005292	HEADER-BOARD TO CABLE;BOX,3P,1R,2MM,SMD-	1	SA
....4	CN702	3711-005497	HEADER-BOARD TO CABLE;BOX,15P,1R,1.25MM,	1	SA
....4	CN1302	3711-005499	HEADER-BOARD TO CABLE;BOX,8P,1R,1.25mm,S	1	SA
....4	L101	BN27-00008A	COIL CHOKE-SMD;SMD12*12*8.5,GH15/17PS,22	1	SA
....4	L102	BN27-00008A	COIL CHOKE-SMD;SMD12*12*8.5,GH15/17PS,22	1	SA
....4	MAIN	BN97-00965A	ASSY MICOM-AMZ;vxWorks_romCompress-,LNS2	1	SNA
.....5	IC115	1107-001228	IC-FLASH MEMORY;28F640,64Mbit,8Mx8/4Mx16	1	SA
....4	SUB	BN97-00965D	ASSY MICOM-AMZ;T-BORDNUS5-0057,LNS2641,0	1	SNA
.....5	IC520	0903-001389	IC-MICROCONTROLLER;S3F866B,8Bit,QFP,44P,	1	SNA
....4	T0077	BN41-00679B	PCB MAIN;FR-4,4,0.1,1.486,240x192	1	SNA
...3	T0568	BP39-00217A	CBF IF;HLR5668WAX,1PIN,1365#26,80mm,BK,D	1	SA
...3	T0066	BP62-00047B	HEAT SINK-ES;MU15UO,A6063S,T2.5,13,13,TA	1	SNA
...3	T0066	BP62-00017A	HEAT SINK-ES;SP-50L2HX,A6063S,T2.0,26.2,	1	SNA
1	M0019	BN92-01801J	ASSY LABEL;LNS2641,3241DX/XAA	1	SNA

6-2 LN-S3241D Parts List

Level	Loc. No.	Code No.	Description & Specification	Q'ty	SA/SNA
0		LNS3241DX/XAA	LN-S3241D,E62A/32T70-GSM,32,LCD-TV,UNITE	0	
1	M0001	BN90-00858A	ASSY COVER FRONT;32T70,UO,SONOMA	1	SNA
..2	M0081	6006-001096	SCREW-TAPTITE;BH,+,WP,B,M4.0,L12,ZPC(BLK	4	SNA
..2	T0003	BN96-03175A	ASSY COVER P-FRONT;32T70,UO,HIPS,V0,BK50	1	SA
...3	M0081	6003-001003	SCREW-TAPTITE;BH,+,B,M4,L12,ZPC(BLK),SWR	2	SNA
...3	M0081	6003-001003	SCREW-TAPTITE;BH,+,B,M4,L12,ZPC(BLK),SWR	1	SNA
...3	M0081	6003-001003	SCREW-TAPTITE;BH,+,B,M4,L12,ZPC(BLK),SWR	2	SNA
...3	T0056	BN63-02413A	COVER-DECORATION;SONOMA 32,HIPS,HB,GR503	1	SNA
...3	M0112	BN63-02467A	COVER-FRONT;32T70,UO(CMO),HIPS,V0,BK500,	1	SNA
...3	T0059	BN64-00379A	INDICATOR LED;ROME-II,23,PC,CLEAR	1	SNA
...3	T0061	BN64-00453A	WINDOW-REMOCON;32R71,PC,V0,VIOLET,DIFFUS	1	SNA
...3	T0022	BN64-00467A	KNOB CONTROL;SONOMA26,32,40,ABS,-,-,-,V0	1	SNA
...3	T0023	BN64-00476A	KNOB POWER;SONOMA,26,32,40,HIPS,HB,GR503	1	SNA
...3	T0054	BN64-00477A	KNOB-DECORATION;SONOMA26,32,40,ABS,HB,GR	1	SNA
...3	T0382	BP61-00509C	HOLDER-CARE;PJT,ACRYL-FOAM,T0.25,W20.0mm	0.28	SNA
...3	M0162	6502-001067	CABLE CLAMP;DAFC-1300,ID2.2,T5.2,NYLIN6/	2	SNA
...3	T0069	AA60-00171L	SPACER-FELT;46L3,FELT,460,T0.5,10	2	SNA
...3	M0146	BN96-03437A	ASSY BOARD P-POWER;BORDEAUX2,CT5000-4150	1	SA
...3	M0145	BN96-03466A	ASSY BOARD P-FUNCTION;SONOMA,SJ06-01-008	1	SA
...3	T0060	BN61-01655A	SPRING ETC;STS-304 SUS,D8,L12,T0.5	1	SA
..2	T0175	BN96-03247A	ASSY SPEAKER P;8ohm,Sonoma 32,Left,10W,N	1	SA
..2	T0175	BN96-03248A	ASSY SPEAKER P;8ohm,Sonoma 32,Right,10W,	1	SA
..2	T0382	BP61-00495C	HOLDER-CARE;PJT,ACRYL-FOAM,T0.25,W30.0mm	0.2	SNA
1	M0216	BN90-00876A	ASSY STAND;32T70,SONOMA	1	SNA
..2	T0524	6902-000520	BAG PE;HDPE/NITRON(DOUBLE),T0.015/T0.5(D	1	SNA
..2	M0013	BN96-03191A	ASSY STAND P-BASE;32T70,HIPS,HB,BK500,BK	1	SA
...3	T0081	6002-001294	SCREW-TAPPING;BH,+,,M4,L16,ZPC(BLK)	3	SA
...3	M0081	6003-001239	SCREW-TAPTITE;FH,+,B,M4,L10,ZPC(YEL),SWR	6	SA
...3		BN61-01812A	BRACKET-STAND BOTTOM;32 MILANO,SECC,T2.0	1	SNA
...3		BN61-02360A	GUIDE-STAND;SONOMA 32,HIPS VO,BK500	1	SNA
...3	T0132	BN73-00052A	RUBBER FOOT;ARES 17,SILICON,DIA 17 * T1.	6	SNA
...3	T0004	BN63-01937C	COVER-STAND BASE;32T70,HIPS,HB,BK500,BKP	1	SNA
1	M0002	BN90-00879A	ASSY COVER REAR;32T70,UO	1	SNA
..2	T0081	6002-001294	SCREW-TAPPING;BH,+,,M4,L16,ZPC(BLK)	2	SA
..2	T0081	6002-001294	SCREW-TAPPING;BH,+,,M4,L16,ZPC(BLK)	9	SA
..2	M0013	BN96-03188A	ASSY COVER P-REAR;32T70,UO,HIPS,V0,BK500	1	SA
...3	T0101	BN61-02032A	BRACKET-WALL;32,MGM,SECC,T1.6	2	SNA
...3	M0006	BN63-02410A	COVER-REAR;32T70,UO,HIPS,VO,BK500,SONOMA	1	SNA
...3	T0064	BN65-00002A	CLAMPER CORE;BORDEAUX,PP,V0,BLK	1	SNA
...3	T0071	BN64-00447K	INLAY-TERMINAL;32,40T70,PS SHEET,T0.5,BU	1	SNA
1	T0852	BN91-00875A	ASSY LCD-CMO;A61J-CMO	1	SNA
..2	M0215	BN07-00207A	LCD-PANEL;V320B1-L01,Duomo,8bit,760*450*	1	SA
1		BN91-01007D	ASSY SHIELD-CMO;LN-S3241D,CMO,SONOMA	1	SNA
..2	M0081	6003-000115	SCREW-TAPTITE;BH,+,B,M3,L6,ZPC(BLK),SWRC	4	SNA
..2	M0081	6003-000115	SCREW-TAPTITE;BH,+,B,M3,L6,ZPC(BLK),SWRC	4	SNA
..2	M0081	6003-000115	SCREW-TAPTITE;BH,+,B,M3,L6,ZPC(BLK),SWRC	7	SNA
..2	M0081	6003-001003	SCREW-TAPTITE;BH,+,B,M4,L12,ZPC(BLK),SWR	6	SNA
..2	M0081	6003-001003	SCREW-TAPTITE;BH,+,B,M4,L12,ZPC(BLK),SWR	2	SNA
..2	M0081	6003-001003	SCREW-TAPTITE;BH,+,B,M4,L12,ZPC(BLK),SWR	2	SNA
..2	M0081	6003-001003	SCREW-TAPTITE;BH,+,B,M4,L12,ZPC(BLK),SWR	4	SNA
..2	M0081	6003-001003	SCREW-TAPTITE;BH,+,B,M4,L12,ZPC(BLK),SWR	1	SNA
..2	M0081	6003-001003	SCREW-TAPTITE;BH,+,B,M4,L12,ZPC(BLK),SWR	2	SNA
..2	T0081	6006-000245	SCREW-MACHINE;WSP,PH,+,M4,L8,ZPC(YEL),SW	4	SNA
..2	T0081	6006-000245	SCREW-MACHINE;WSP,PH,+,M4,L8,ZPC(YEL),SW	1	SNA
..2	M2893	BN39-00691B	LEAD CONNECTOR;LE32R71BX,UL1007#26,16P,1	1	SA
..2	32" AUO/CM	BN61-02207A	BRACKET-PANEL SIDE;Bordeaux 26,SECC,T1.2	4	SNA
..2		BN61-02364A	BRACKET-STAND LINK;SONOMA 32,SECC,T1.6	1	SNA
..2	T0447	BN96-02999B	ASSY BRACKET P-PANEL;BORDEAUX,32,AMLCD,S	1	SNA
...3	M0146	BN61-02194A	BRACKET-PANEL TOP;Bordeaux 32,SECC,T1.2	1	SNA
...3		BN61-02195A	BRACKET-PANEL BOTTOM;Bordeaux 32,SECC,T1	1	SNA
...3		BN61-02198B	BRACKET-GUIDE MAIN;Bordeaux 32,SECC,T1.2	1	SNA
...3		BN61-02200A	BRACKET-GUIDE POWER;Bordeaux 32,SECC,T1.	1	SNA
...3		BN61-02199B	BRACKET-GUIDE POWER;Bordeaux 32,SECC,T1.	1	SNA
...3	M0131	AA63-01437A	GASKET;Bordeaux,Conductive Fabric,20mm,9	1	SNA
...3	M0131	AA63-01438A	GASKET;Bordeaux,Conductive Fabric,7mm,8m	1	SNA
..2	T0159	BN96-03057A	ASSY PCB P-SMPS;Bordeaux 32 PFC,LE32R71B	1	SA
..2	T0069	AA60-00171L	SPACER-FELT;46L3,FELT,460,T0.5,10	2	SNA

Level	Loc. No.	Code No.	Description & Specification	Q'ty	SA/SNA
..2	M2893	BH39-00362G	LEAD CONNECTOR;SONOMA,UL1007#26,5PIN,100	1	SA
..2	M2893	BN39-00659A	LEAD CONNECTOR;RE32*CMO,UL1007#26,14/12P	1	SA
..2		BN96-03186B	ASSY BOARD P-HOLDER AV;SONOMA,32,UO	1	SNA
...3	M2893	BN39-00672A	LEAD CONNECTOR;LNR329DX/XAA,UL2835#28,UL	1	SA
...3	M0020	BN96-02439A	ASSY BOARD P-SUB AV SIDE;MILANO,CT5000-3	1	SA
...3		BN61-02365A	HOLDER-SIDE AV;SONOMA 32,HIPS V0,BK500	1	SNA
...3	T0578	BN64-00454B	INLAY AV;BORDEAUX,PS SHEET,T0.3,-,-,-,UO	1	SNA
..2	T0076	BN39-00615D	CBF HARNESS;BORDEAUX,1617#22,3P,1P,RING,	1	SA
..2	T0562	6046-001013	STAND OFF;M3,L5,Ni PLT,SUM24L,#4-40	2	SNA
..2	M2893	BN39-00721A	LEAD CONNECTOR-LVDS;Sonoma,UL1571#30,30P	1	SA
..2		BN96-03298B	ASSY SHIELD P-PCB MAIN;BORDEAUX,32,SECC,	1	SNA
...3	M0131	AA63-01436A	GASKET;Bordeaux,Conductive Fabric,5mm,7m	1	SNA
...3	T0603	BN63-02325A	SHIELD-PCB MAIN;Bordeaux 32,SECC,T0.5,BU	1	SNA
...3	M0131	BN63-02532A	GASKET;Bordeaux,Conductive Fabric,12mm,7	1	SNA
..2	M0114	BN61-02500A	HOLDER-WIRE;NYLON6.6,NATURAL	2	SNA
..2	CCMM1	BN73-00024D	SILICON/RUBBER;BORDEAUX,SILICON,28x28XT6	1	SA
1	M0045	BN92-01661E	ASSY ACCESSORY;LNS2641DX/XAA,SONOMA	1	SNA
..2	M0045	BN96-02984E	ASSY ACCESSORY;LNS2641DX/XAA,SONOMA	1	SA
...3	T0268	3903-000144	CBF-POWER CORD;DT,US,BP3/Y,U(IEC C13-RA)	1	SA
...3	T0524	6902-000110	BAG PE;LDPE,T0.05,W250,L400,TRP,28,2	2	SNA
...3	ACCESSORY	AA68-00371C	CARD WARRANTY-04;,SEA,W/P100(G),1 YEAR	1	SNA
...3	ACCESSORY	AA68-00682C	CARD WARRANTY-05;PDP,W/P120(G),SECA,B5,B	1	SNA
...3	ACCESSORY	AA68-03242F	MANUAL FLYER-01,SAFETY GUIDE;All Model,S	1	SNA
...3	MP1.0	AA68-40065B	CARD-01,REGISTRATION;,SEA,A5,ENG,A/P220,	1	SNA
...3	T0074	BN59-00511A	REMOCON;Bordeaux,TM87B,SAMSUNG 28P+EEPRO	1	SA
...3	T0531	BN63-02415A	COVER-BOTTOM;SONOMA 32,HIPS,V0,BK500	1	SNA
...3	T0238	BN68-00832C	MANUAL FLYER-REGISTRATION CARD;SECA all,	1	SNA
...3	T0238	BN68-00832D	MANUAL FLYER-REGISTRATION CARD;SECA all,	1	SNA
...3	M0156	BN68-01001A	MANUAL USERS-01;COMM,SAMSUNG,3Langs,N.Am	1	SNA
...3	ACCESSORY	BN68-01003A	MANUAL FLYER-QSG(01);COMM,SAMSUNG,Englis	1	SNA
...3	ACCESSORY	BN69-01086A	BOX ACCESSORY-00;COMM,SW1,YEL,-,W573,D63	1	SNA
...3	M0045	BN96-01800A	ASSY ACCESSORY;ROME32,SCREW	1	SA
....4	T0081	6002-001294	SCREW-TAPPING;BH,+,,M4,L16,ZPC(BLK)	4	SA
....4	ACCESSORY	6902-000128	BAG ZIPPER;LDPE,T0.05,W200,L150,TRP,8,2-	1	SNA
1	M0003	BN92-01700A	ASSY BOX;32T70,UO,SONOMA	1	SNA
..2		BN69-01312A	BOX-01,MONITOR;32T7,SY-05,A,YEL,A1,L995*	1.02	SNA
1	M0113	BN92-01703A	ASSY P/MATERIAL;32T70,SONOMA	1	SNA
..2	T0376	6902-000061	BAG AIR;LDPE,T0.2,L1000,W500,TRP,,,	0.016	SNA
..2	T0376	6902-000379	BAG AIR;LDPE,T0.2,W1000,L1800,TRP,-,--	0.007	SNA
..2	T0524	6902-000519	BAG PE;HDPE/NITRON(DOUBLE),T0.015/T0.05(	1	SNA
..2	T0081	6902-000604	BAG WRAPPING;LDPE,T0.02,W500,L10000,TRP,	6.35	SNA
1	M0017	BN91-01054D	ASSY CHASSIS-CMO;LNS3241DX/XAA	1	SNA
..2		BN94-00963D	ASSY PCB MAIN-CMZ;LNS3241DX/XAA	1	SNA
...3	T0245	0202-001522	SOLDER-WIRE FLUX;LFA3-107,-,D1.2,96.5Sn/	0.25	SNA
...3	JA801	3701-001294	CONNECTOR-DSUB;15P,3R,FEMALE,STRAIGHT,AU	1	SA
...3	CN201	3711-004236	HEADER-BOARD TO CABLE;BOX,6P,1R,2MM,STRA	1	SA
...3	CN1001	3711-004484	HEADER-BOARD TO CABLE;BOX,5P,1R,2mm,STRA	1	SA
...3	CN901	3711-004484	HEADER-BOARD TO CABLE;BOX,5P,1R,2mm,STRA	1	SA
...3	CN701	3711-004909	HEADER-BOARD TO CABLE;BOX,14P,2R,2MM,ANG	1	SA
...3	CN1003	3711-005884	HEADER-BOARD TO BOARD;BOX,30P,2R,2mm,ANG	1	SA
...3	CN102	3711-005942	HEADER-BOARD TO CABLE;BOX,16P,1R,2mm,STR	1	SA
...3	JA701	3722-001061	JACK-PHONE;1P,3.6PI,AG,BLK,N	1	SA
...3	JA803	3722-001061	JACK-PHONE;1P,3.6PI,AG,BLK,N	1	SA
...3	CN1301	3722-001147	JACK-USB;4P/1C,AU,BLK,STRAIGHT,A TYPE	1	SA
...3	JA604	3722-001734	JACK-VHS;4P,SN,BLK,STRAIGHT	1	SA
...3	JA603	3722-001903	JACK-PIN;2P,-,AU,WHT/RED,-	1	SA
...3	JA605	3722-001903	JACK-PIN;2P,-,AU,WHT/RED,-	1	SA
...3	JA805	3722-001903	JACK-PIN;2P,-,AU,WHT/RED,-	1	SA
...3	JA601	3722-001938	JACK-PIN;3P,-,AU,GRN/BLU/RED,-	1	SA
...3	JA602	3722-002063	JACK-PIN;3P,AU,YEL/WHT/RED,STRAIGHT	1	SA
...3	CIS3	BN40-00081A	TUNER;DNVS303HH261A,DNVS303HH261A,VSB/QA	1	SA
...3	T0253	BN59-00498A	MODULE-SPLITTER;UMX-NT-059,UMX-NT-059,2i	1	SA
...3	T0852	BN96-01470A	ASSY BOARD P-OPTICAL;HP-P5581,OPTICAL	1	SA
....4	CN906	3707-001067	CONNECTOR-OPTICAL;PLUG,SM,-,4.4/2.0mm	1	SA
...3		BN97-00964D	ASSY SMD-CMO;LNS3241DX/XAA	1	SNA
....4	CIS05	0202-001477	SOLDER-CREAM;LST309-M,-,D20~45§-,96.5Sn/	4.902	SNA
....4	D501	0401-001056	DIODE-SWITCHING;MMBD4148SE,100V,200mA,SO	1	SA
....4	D708	0401-001056	DIODE-SWITCHING;MMBD4148SE,100V,200mA,SO	1	SA

Level	Loc. No.	Code No.	Description & Specification	Q'ty	SA/SNA
....4	D709	0401-001056	DIODE-SWITCHING;MMBD4148SE,100V,200mA,SO	1	SA
....4	D710	0401-001056	DIODE-SWITCHING;MMBD4148SE,100V,200mA,SO	1	SA
....4	D711	0401-001056	DIODE-SWITCHING;MMBD4148SE,100V,200mA,SO	1	SA
....4	D712	0401-001056	DIODE-SWITCHING;MMBD4148SE,100V,200mA,SO	1	SA
....4	D713	0401-001056	DIODE-SWITCHING;MMBD4148SE,100V,200mA,SO	1	SA
....4	D801	0401-001056	DIODE-SWITCHING;MMBD4148SE,100V,200mA,SO	1	SA
....4	D802	0401-001056	DIODE-SWITCHING;MMBD4148SE,100V,200mA,SO	1	SA
....4	D803	0401-001056	DIODE-SWITCHING;MMBD4148SE,100V,200mA,SO	1	SA
....4	D813	0401-001056	DIODE-SWITCHING;MMBD4148SE,100V,200mA,SO	1	SA
....4	D814	0401-001056	DIODE-SWITCHING;MMBD4148SE,100V,200mA,SO	1	SA
....4	D815	0401-001056	DIODE-SWITCHING;MMBD4148SE,100V,200mA,SO	1	SA
....4	D816	0401-001056	DIODE-SWITCHING;MMBD4148SE,100V,200mA,SO	1	SA
....4	D817	0401-001056	DIODE-SWITCHING;MMBD4148SE,100V,200mA,SO	1	SA
....4	D818	0401-001056	DIODE-SWITCHING;MMBD4148SE,100V,200mA,SO	1	SA
....4	D819	0401-001056	DIODE-SWITCHING;MMBD4148SE,100V,200mA,SO	1	SA
....4	D820	0401-001056	DIODE-SWITCHING;MMBD4148SE,100V,200mA,SO	1	SA
....4	D831	0401-001056	DIODE-SWITCHING;MMBD4148SE,100V,200mA,SO	1	SA
....4	D832	0401-001056	DIODE-SWITCHING;MMBD4148SE,100V,200mA,SO	1	SA
....4	D833	0401-001056	DIODE-SWITCHING;MMBD4148SE,100V,200mA,SO	1	SA
....4	D834	0401-001056	DIODE-SWITCHING;MMBD4148SE,100V,200mA,SO	1	SA
....4	D835	0401-001056	DIODE-SWITCHING;MMBD4148SE,100V,200mA,SO	1	SA
....4	D836	0401-001056	DIODE-SWITCHING;MMBD4148SE,100V,200mA,SO	1	SA
....4	D837	0401-001056	DIODE-SWITCHING;MMBD4148SE,100V,200mA,SO	1	SA
....4	D838	0401-001056	DIODE-SWITCHING;MMBD4148SE,100V,200mA,SO	1	SA
....4	D101	0402-000553	DIODE-SCHOTTKY;"SS24,B240",40V,2000mA,DO	1	SA
....4	D102	0402-000553	DIODE-SCHOTTKY;"SS24,B240",40V,2000mA,DO	1	SA
....4	D1301	0403-000620	DIODE-ZENER;RLZ5.6B,5.45-5.73V,500mW,LL-	1	SA
....4	D1302	0403-000620	DIODE-ZENER;RLZ5.6B,5.45-5.73V,500mW,LL-	1	SA
....4	D206	0403-000620	DIODE-ZENER;RLZ5.6B,5.45-5.73V,500mW,LL-	1	SA
....4	D821	0403-000620	DIODE-ZENER;RLZ5.6B,5.45-5.73V,500mW,LL-	1	SA
....4	D822	0403-000620	DIODE-ZENER;RLZ5.6B,5.45-5.73V,500mW,LL-	1	SA
....4	D839	0403-000620	DIODE-ZENER;RLZ5.6B,5.45-5.73V,500mW,LL-	1	SA
....4	D840	0403-000620	DIODE-ZENER;RLZ5.6B,5.45-5.73V,500mW,LL-	1	SA
....4	D901	0403-000620	DIODE-ZENER;RLZ5.6B,5.45-5.73V,500mW,LL-	1	SA
....4	D902	0403-000620	DIODE-ZENER;RLZ5.6B,5.45-5.73V,500mW,LL-	1	SA
....4	D903	0403-000620	DIODE-ZENER;RLZ5.6B,5.45-5.73V,500mW,LL-	1	SA
....4	D904	0403-000620	DIODE-ZENER;RLZ5.6B,5.45-5.73V,500mW,LL-	1	SA
....4	D905	0403-000620	DIODE-ZENER;RLZ5.6B,5.45-5.73V,500mW,LL-	1	SA
....4	D906	0403-000620	DIODE-ZENER;RLZ5.6B,5.45-5.73V,500mW,LL-	1	SA
....4	D907	0403-000620	DIODE-ZENER;RLZ5.6B,5.45-5.73V,500mW,LL-	1	SA
....4	D908	0403-000620	DIODE-ZENER;RLZ5.6B,5.45-5.73V,500mW,LL-	1	SA
....4	D909	0403-000620	DIODE-ZENER;RLZ5.6B,5.45-5.73V,500mW,LL-	1	SA
....4	D910	0403-000620	DIODE-ZENER;RLZ5.6B,5.45-5.73V,500mW,LL-	1	SA
....4	D911	0403-000620	DIODE-ZENER;RLZ5.6B,5.45-5.73V,500mW,LL-	1	SA
....4	D912	0403-000620	DIODE-ZENER;RLZ5.6B,5.45-5.73V,500mW,LL-	1	SA
....4	D205	0403-001016	DIODE-ZENER;RLZ6.2B,5.96-6.27V,500mW,LL-	1	SA
....4	D804	0403-001016	DIODE-ZENER;RLZ6.2B,5.96-6.27V,500mW,LL-	1	SA
....4	D827	0403-001016	DIODE-ZENER;RLZ6.2B,5.96-6.27V,500mW,LL-	1	SA
....4	D601	0403-001052	DIODE-ZENER;RD8.2MB,7.7-8.7V,200mW,SOT-2	1	SA
....4	D602	0403-001052	DIODE-ZENER;RD8.2MB,7.7-8.7V,200mW,SOT-2	1	SA
....4	D603	0403-001052	DIODE-ZENER;RD8.2MB,7.7-8.7V,200mW,SOT-2	1	SA
....4	D604	0403-001052	DIODE-ZENER;RD8.2MB,7.7-8.7V,200mW,SOT-2	1	SA
....4	D605	0403-001052	DIODE-ZENER;RD8.2MB,7.7-8.7V,200mW,SOT-2	1	SA
....4	D606	0403-001052	DIODE-ZENER;RD8.2MB,7.7-8.7V,200mW,SOT-2	1	SA
....4	D607	0403-001052	DIODE-ZENER;RD8.2MB,7.7-8.7V,200mW,SOT-2	1	SA
....4	D608	0403-001052	DIODE-ZENER;RD8.2MB,7.7-8.7V,200mW,SOT-2	1	SA
....4	D609	0403-001052	DIODE-ZENER;RD8.2MB,7.7-8.7V,200mW,SOT-2	1	SA
....4	D610	0403-001052	DIODE-ZENER;RD8.2MB,7.7-8.7V,200mW,SOT-2	1	SA
....4	D611	0403-001052	DIODE-ZENER;RD8.2MB,7.7-8.7V,200mW,SOT-2	1	SA
....4	D612	0403-001052	DIODE-ZENER;RD8.2MB,7.7-8.7V,200mW,SOT-2	1	SA
....4	D613	0403-001052	DIODE-ZENER;RD8.2MB,7.7-8.7V,200mW,SOT-2	1	SA
....4	D614	0403-001052	DIODE-ZENER;RD8.2MB,7.7-8.7V,200mW,SOT-2	1	SA
....4	D615	0403-001052	DIODE-ZENER;RD8.2MB,7.7-8.7V,200mW,SOT-2	1	SA
....4	D616	0403-001052	DIODE-ZENER;RD8.2MB,7.7-8.7V,200mW,SOT-2	1	SA
....4	D617	0403-001052	DIODE-ZENER;RD8.2MB,7.7-8.7V,200mW,SOT-2	1	SA
....4	D618	0403-001052	DIODE-ZENER;RD8.2MB,7.7-8.7V,200mW,SOT-2	1	SA
....4	D619	0403-001052	DIODE-ZENER;RD8.2MB,7.7-8.7V,200mW,SOT-2	1	SA
....4	D620	0403-001052	DIODE-ZENER;RD8.2MB,7.7-8.7V,200mW,SOT-2	1	SA
....4	D621	0403-001052	DIODE-ZENER;RD8.2MB,7.7-8.7V,200mW,SOT-2	1	SA
....4	D622	0403-001052	DIODE-ZENER;RD8.2MB,7.7-8.7V,200mW,SOT-2	1	SA
....4	D623	0403-001052	DIODE-ZENER;RD8.2MB,7.7-8.7V,200mW,SOT-2	1	SA
....4	D624	0403-001052	DIODE-ZENER;RD8.2MB,7.7-8.7V,200mW,SOT-2	1	SA

Level	Loc. No.	Code No.	Description & Specification	Q'ty	SA/SNA
....4	D625	0403-001052	DIODE-ZENER;RD8.2MB,7.7-8.7V,200mW,SOT-2	1	SA
....4	D626	0403-001052	DIODE-ZENER;RD8.2MB,7.7-8.7V,200mW,SOT-2	1	SA
....4	D627	0403-001052	DIODE-ZENER;RD8.2MB,7.7-8.7V,200mW,SOT-2	1	SA
....4	D805	0403-001052	DIODE-ZENER;RD8.2MB,7.7-8.7V,200mW,SOT-2	1	SA
....4	D806	0403-001052	DIODE-ZENER;RD8.2MB,7.7-8.7V,200mW,SOT-2	1	SA
....4	D807	0403-001052	DIODE-ZENER;RD8.2MB,7.7-8.7V,200mW,SOT-2	1	SA
....4	D808	0403-001052	DIODE-ZENER;RD8.2MB,7.7-8.7V,200mW,SOT-2	1	SA
....4	D809	0403-001052	DIODE-ZENER;RD8.2MB,7.7-8.7V,200mW,SOT-2	1	SA
....4	D810	0403-001052	DIODE-ZENER;RD8.2MB,7.7-8.7V,200mW,SOT-2	1	SA
....4	D811	0403-001052	DIODE-ZENER;RD8.2MB,7.7-8.7V,200mW,SOT-2	1	SA
....4	D812	0403-001052	DIODE-ZENER;RD8.2MB,7.7-8.7V,200mW,SOT-2	1	SA
....4	D823	0403-001052	DIODE-ZENER;RD8.2MB,7.7-8.7V,200mW,SOT-2	1	SA
....4	D824	0403-001052	DIODE-ZENER;RD8.2MB,7.7-8.7V,200mW,SOT-2	1	SA
....4	D825	0403-001052	DIODE-ZENER;RD8.2MB,7.7-8.7V,200mW,SOT-2	1	SA
....4	D826	0403-001052	DIODE-ZENER;RD8.2MB,7.7-8.7V,200mW,SOT-2	1	SA
....4	D828	0403-001052	DIODE-ZENER;RD8.2MB,7.7-8.7V,200mW,SOT-2	1	SA
....4	D829	0403-001052	DIODE-ZENER;RD8.2MB,7.7-8.7V,200mW,SOT-2	1	SA
....4	D830	0403-001052	DIODE-ZENER;RD8.2MB,7.7-8.7V,200mW,SOT-2	1	SA
....4	D841	0403-001052	DIODE-ZENER;RD8.2MB,7.7-8.7V,200mW,SOT-2	1	SA
....4	D842	0403-001052	DIODE-ZENER;RD8.2MB,7.7-8.7V,200mW,SOT-2	1	SA
....4	D843	0403-001052	DIODE-ZENER;RD8.2MB,7.7-8.7V,200mW,SOT-2	1	SA
....4	D844	0403-001052	DIODE-ZENER;RD8.2MB,7.7-8.7V,200mW,SOT-2	1	SA
....4	D503	0403-001425	DIODE-ZENER;BZX84C33,31-35V,350mW,SOT-23	1	SA
....4	D701	0406-001172	DIODE-TVS;CDS3C30GTH,48V,0W,SMD	1	SA
....4	D702	0406-001172	DIODE-TVS;CDS3C30GTH,48V,0W,SMD	1	SA
....4	D201	0407-000123	DIODE-ARRAY;DAN202K,80V,100mA,CA2-3,SOT-	1	SA
....4	D202	0407-000123	DIODE-ARRAY;DAN202K,80V,100mA,CA2-3,SOT-	1	SA
....4	D203	0407-000123	DIODE-ARRAY;DAN202K,80V,100mA,CA2-3,SOT-	1	SA
....4	D204	0407-000123	DIODE-ARRAY;DAN202K,80V,100mA,CA2-3,SOT-	1	SA
....4	D301	0407-000123	DIODE-ARRAY;DAN202K,80V,100mA,CA2-3,SOT-	1	SA
....4	D302	0407-000123	DIODE-ARRAY;DAN202K,80V,100mA,CA2-3,SOT-	1	SA
....4	D401	0407-000123	DIODE-ARRAY;DAN202K,80V,100mA,CA2-3,SOT-	1	SA
....4	D402	0407-000123	DIODE-ARRAY;DAN202K,80V,100mA,CA2-3,SOT-	1	SA
....4	D403	0407-000123	DIODE-ARRAY;DAN202K,80V,100mA,CA2-3,SOT-	1	SA
....4	Q401	0501-000002	TR-SMALL SIGNAL;KSA812,PNP,150MW,SOT-23,	1	SA
....4	Q303	0501-000280	TR-SMALL SIGNAL;KSA1182,PNP,150MW,SOT-23	1	SA
....4	Q1304	0501-000342	TR-SMALL SIGNAL;KSC1623-Y,NPN,200mW,SOT-	1	SA
....4	Q202	0501-000342	TR-SMALL SIGNAL;KSC1623-Y,NPN,200mW,SOT-	1	SA
....4	Q204	0501-000342	TR-SMALL SIGNAL;KSC1623-Y,NPN,200mW,SOT-	1	SA
....4	Q205	0501-000342	TR-SMALL SIGNAL;KSC1623-Y,NPN,200mW,SOT-	1	SA
....4	Q301	0501-000342	TR-SMALL SIGNAL;KSC1623-Y,NPN,200mW,SOT-	1	SA
....4	Q302	0501-000342	TR-SMALL SIGNAL;KSC1623-Y,NPN,200mW,SOT-	1	SA
....4	Q404	0501-000342	TR-SMALL SIGNAL;KSC1623-Y,NPN,200mW,SOT-	1	SA
....4	Q502	0501-000342	TR-SMALL SIGNAL;KSC1623-Y,NPN,200mW,SOT-	1	SA
....4	Q501	0501-000344	TR-SMALL SIGNAL;KSC1623-G,NPN,200mW,SOT-	1	SA
....4	Q101	0501-002080	TR-SMALL SIGNAL;2SC2412K,NPN,200mW,SC-59	1	SA
....4	Q102	0501-002080	TR-SMALL SIGNAL;2SC2412K,NPN,200mW,SC-59	1	SA
....4	Q201	0501-002080	TR-SMALL SIGNAL;2SC2412K,NPN,200mW,SC-59	1	SA
....4	Q402	0501-002080	TR-SMALL SIGNAL;2SC2412K,NPN,200mW,SC-59	1	SA
....4	Q403	0501-002080	TR-SMALL SIGNAL;2SC2412K,NPN,200mW,SC-59	1	SA
....4	Q503	0501-002080	TR-SMALL SIGNAL;2SC2412K,NPN,200mW,SC-59	1	SA
....4	Q701	0501-002080	TR-SMALL SIGNAL;2SC2412K,NPN,200mW,SC-59	1	SA
....4	Q801	0501-002080	TR-SMALL SIGNAL;2SC2412K,NPN,200mW,SC-59	1	SA
....4	Q1305	0504-001129	TR-DIGITAL;KRC104S-I,NPN,200MW,47K/47K,S	1	SA
....4	Q409	0505-000110	FET-SILICON;2N7002,N,60V,115mA,7.5ohm,0.	1	SA
....4	Q409	0505-000110	FET-SILICON;2N7002,N,60V,115mA,7.5ohm,0.	1	SA
....4	Q409	0505-000110	FET-SILICON;2N7002,N,60V,115mA,7.5ohm,0.	1	SA
....4	Q409	0505-000110	FET-SILICON;2N7002,N,60V,115mA,7.5ohm,0.	1	SA
....4	Q409	0505-000110	FET-SILICON;2N7002,N,60V,115mA,7.5ohm,0.	1	SA
....4	Q409	0505-001170	FET-SILICON;SI9933ADY-T1,P,-20V,3.4A,0.0	1	SA
....4	IC104	0801-002095	IC-CMOS LOGIC;74LCX245,TRANSCEIVER,TSSOP	1	SA
....4	IC104	0801-002095	IC-CMOS LOGIC;74LCX245,TRANSCEIVER,TSSOP	1	SA
....4	IC104	0801-002095	IC-CMOS LOGIC;74LCX245,TRANSCEIVER,TSSOP	1	SA
....4	IC104	0801-002267	IC-CMOS LOGIC;74LCX14,-,SOIC,14P,150MIL,	1	SA
....4	IC104	0801-002633	IC-CMOS LOGIC;NC7WBD3125,2BIT BUS SWITCH	1	SA
....4	IC104	0801-002716	IC-CMOS LOGIC;74LCX157,MULTIPLEXER,SOIC,	1	SA
....4	IC301	1001-000164	IC-ANALOG MULTIPLEX;74HC4052,CMOS,SOP,16	1	SA
....4	IC202	1001-001109	IC-ANALOG SWITCH;FST3125M,BUS SWITCH & C	1	SA
....4	IC806	1001-001109	IC-ANALOG SWITCH;FST3125M,BUS SWITCH & C	1	SA
....4	IC106	1001-001363	IC-VIDEO SWITCH;PI3HDMI412FT,HDMI TMDS S	1	SA
....4	IC107	1002-001399	IC-D/A CONVERTER;PCM1754,24BIT,SSOP,16P,	1	SA
....4	IC701	1006-001266	IC-LINE TRANSCEIVER;SP3232EEY,TSSOP,16P,	1	SA

Level	Loc. No.	Code No.	Description & Specification	Q'ty	SA/SNA
....4	IC112	1103-000129	IC-EEPROM;24C02,2Kbit,256x8Bit,SOP,8P,5x	1	SA
....4	IC112	1103-000129	IC-EEPROM;24C02,2Kbit,256x8Bit,SOP,8P,5x	1	SA
....4	IC112	1103-000129	IC-EEPROM;24C02,2Kbit,256x8Bit,SOP,8P,5x	1	SA
....4	IC112	1103-001147	IC-EEPROM;24256,256Kbit,32Kx8Bit,SOP,8P,	1	SA
....4	IC1202	1105-001538	IC-VIDEO RAM;K4D263238,-,128M,4x1Mx32Bit	1	SA
....4	IC113	1105-001571	IC-DRAM;K4D551638F,4Mx16x4Bit,TSOP(II),6	1	SA
....4	IC113	1105-001571	IC-DRAM;K4D551638F,4Mx16x4Bit,TSOP(II),6	1	SA
....4	DU410	1201-000166	IC-OP AMP;LM358,SOP,ST,8P,150MIL,DUAL,10	1	SA
....4	DU410	1201-000541	IC-OP AMP;062,SOP,8P,153MIL,DUAL,6V/mV,P	1	SA
....4	T0085	1201-002136	IC-AUDIO AMP;LM4810,MSOP,8P,3x3mm,DUAL,-	1	SA
....4	T0085	1201-002246	IC-AUDIO AMP;STA323W,SO,36P,15.9x11mm,-,	1	SA
....4	T0087	1203-001488	IC-POSI.FIXED REG.;7805,T0-252,3P,-,PLAS	1	SA
....4	IC206	1203-001559	IC-RESET;DS1834A,SOIC,8P,150MIL,PLASTIC,	1	SA
....4	T0087	1203-001815	IC-POSI.FIXED REG.;78M09,TO-252,3P,-,PLA	1	SA
....4	T0087	1203-001816	IC-POSI.FIXED REG.;78M08,TO-252,3P,-,PLA	1	SA
....4	IC402	1203-001824	IC-VOL. DETECTOR;7042,SOT-89,3P,-,PLASTI	1	SA
....4	T0087	1203-002699	IC-POSI.FIXED REG.;78D05,DPAK,3P,6.6X6.1	1	SA
....4	T0087	1203-002842	IC-POSI.FIXED REG.;AP1117D-33A,TO-252,3P	1	SA
....4	T0087	1203-002844	IC-POSI.FIXED REG.;AP1117D-18A,TO-252-3L	1	SA
....4	T0087	1203-002844	IC-POSI.FIXED REG.;AP1117D-18A,TO-252-3L	1	SA
....4	T0087	1203-002844	IC-POSI.FIXED REG.;AP1117D-18A,TO-252-3L	1	SA
....4	T0087	1203-002974	IC-POSI.FIXED REG.;AP1117D-25A,TO-252,3P	1	SA
....4	T0087	1203-002974	IC-POSI.FIXED REG.;AP1117D-25A,TO-252,3P	1	SA
....4	IC012	1203-002995	IC-POSI.ADJUST REG.;AP1117D-A,TO-252,3P,	1	SA
....4	T0170	1203-003059	IC-SWITCH VOL. REG.;MP1583,SOIC,8P,4.9x3	1	SA
....4	T0170	1203-003059	IC-SWITCH VOL. REG.;MP1583,SOIC,8P,4.9x3	1	SA
....4	T0087	1203-003561	IC-POSI.FIXED REG.;NCP551SN15T1G,TSOP-5,	1	SA
....4	T0087	1203-003697	IC-POSI.FIXED REG.;SC1566I5M-2.5TRT,TO-2	1	SA
....4	T0087	1203-003697	IC-POSI.FIXED REG.;SC1566I5M-2.5TRT,TO-2	1	SA
....4	IC302	1204-002471	IC-AUDIO PROCESSOR;STV8258DSX,TQFP,80P,1	1	SA
....4	IC118	1204-002496	IC-VIDEO PROCESS;S4LD158X01,QFP,128P,14x	1	SNA
....4	IC118	1204-002503	IC-VIDEO PROCESS;SVP-PX56-7256,PQFP,256P	1	SNA
....4	IC1301	1204-002534	IC-DECODER;S5H2111,BGA,416P,27x27mm,PLAS	1	SA
....4	IC1302	1205-002250	IC-CLOCK GENERATOR;CY24204-3,TSSOP,16P,1	1	SA
....4	R1519	2007-000040	R-CHIP;150ohm,1%,1/10W,TP,1608	1	SA
....4	R1520	2007-000040	R-CHIP;150ohm,1%,1/10W,TP,1608	1	SA
....4	R1201	2007-000043	R-CHIP;1Kohm,1%,1/10W,TP,1608	1	SA
....4	R1202	2007-000043	R-CHIP;1Kohm,1%,1/10W,TP,1608	1	SA
....4	R1008	2007-000052	R-CHIP;10Kohm,1%,1/10W,TP,1608	1	SA
....4	R228	2007-000052	R-CHIP;10Kohm,1%,1/10W,TP,1608	1	SA
....4	R270	2007-000052	R-CHIP;10Kohm,1%,1/10W,TP,1608	1	SA
....4	R275	2007-000052	R-CHIP;10Kohm,1%,1/10W,TP,1608	1	SA
....4	R501	2007-000060	R-CHIP;100Kohm,1%,1/10W,TP,1608	1	SA
....4	R503	2007-000060	R-CHIP;100Kohm,1%,1/10W,TP,1608	1	SA
....4	R1105	2007-000067	R-CHIP;15Kohm,1%,1/10W,TP,1608	1	SA
....4	R1001	2007-000070	R-CHIP;0ohm,5%,1/10W,TP,1608	1	SA
....4	R1010	2007-000070	R-CHIP;0ohm,5%,1/10W,TP,1608	1	SA
....4	R1011	2007-000070	R-CHIP;0ohm,5%,1/10W,TP,1608	1	SA
....4	R1012	2007-000070	R-CHIP;0ohm,5%,1/10W,TP,1608	1	SA
....4	R1013	2007-000070	R-CHIP;0ohm,5%,1/10W,TP,1608	1	SA
....4	R1014	2007-000070	R-CHIP;0ohm,5%,1/10W,TP,1608	1	SA
....4	R1015	2007-000070	R-CHIP;0ohm,5%,1/10W,TP,1608	1	SA
....4	R1016	2007-000070	R-CHIP;0ohm,5%,1/10W,TP,1608	1	SA
....4	R1017	2007-000070	R-CHIP;0ohm,5%,1/10W,TP,1608	1	SA
....4	R1018	2007-000070	R-CHIP;0ohm,5%,1/10W,TP,1608	1	SA
....4	R1020	2007-000070	R-CHIP;0ohm,5%,1/10W,TP,1608	1	SA
....4	R1021	2007-000070	R-CHIP;0ohm,5%,1/10W,TP,1608	1	SA
....4	R1022	2007-000070	R-CHIP;0ohm,5%,1/10W,TP,1608	1	SA
....4	R1023	2007-000070	R-CHIP;0ohm,5%,1/10W,TP,1608	1	SA
....4	R1024	2007-000070	R-CHIP;0ohm,5%,1/10W,TP,1608	1	SA
....4	R1025	2007-000070	R-CHIP;0ohm,5%,1/10W,TP,1608	1	SA
....4	R1026	2007-000070	R-CHIP;0ohm,5%,1/10W,TP,1608	1	SA
....4	R1027	2007-000070	R-CHIP;0ohm,5%,1/10W,TP,1608	1	SA
....4	R1028	2007-000070	R-CHIP;0ohm,5%,1/10W,TP,1608	1	SA
....4	R1029	2007-000070	R-CHIP;0ohm,5%,1/10W,TP,1608	1	SA
....4	R1030	2007-000070	R-CHIP;0ohm,5%,1/10W,TP,1608	1	SA
....4	R1031	2007-000070	R-CHIP;0ohm,5%,1/10W,TP,1608	1	SA
....4	R1032	2007-000070	R-CHIP;0ohm,5%,1/10W,TP,1608	1	SA
....4	R1033	2007-000070	R-CHIP;0ohm,5%,1/10W,TP,1608	1	SA
....4	R1038	2007-000070	R-CHIP;0ohm,5%,1/10W,TP,1608	1	SA
....4	R1055P	2007-000070	R-CHIP;0ohm,5%,1/10W,TP,1608	1	SA
....4	R1304	2007-000070	R-CHIP;0ohm,5%,1/10W,TP,1608	1	SA

Level	Loc. No.	Code No.	Description & Specification	Q'ty	SA/SNA
....4	R1326	2007-000070	R-CHIP;0ohm,5%,1/10W,TP,1608	1	SA
....4	R1329	2007-000070	R-CHIP;0ohm,5%,1/10W,TP,1608	1	SA
....4	R1343	2007-000070	R-CHIP;0ohm,5%,1/10W,TP,1608	1	SA
....4	R1345	2007-000070	R-CHIP;0ohm,5%,1/10W,TP,1608	1	SA
....4	R1353	2007-000070	R-CHIP;0ohm,5%,1/10W,TP,1608	1	SA
....4	R1355	2007-000070	R-CHIP;0ohm,5%,1/10W,TP,1608	1	SA
....4	R1357	2007-000070	R-CHIP;0ohm,5%,1/10W,TP,1608	1	SA
....4	R1359	2007-000070	R-CHIP;0ohm,5%,1/10W,TP,1608	1	SA
....4	R1601	2007-000070	R-CHIP;0ohm,5%,1/10W,TP,1608	1	SA
....4	R1602	2007-000070	R-CHIP;0ohm,5%,1/10W,TP,1608	1	SA
....4	R1603	2007-000070	R-CHIP;0ohm,5%,1/10W,TP,1608	1	SA
....4	R1604	2007-000070	R-CHIP;0ohm,5%,1/10W,TP,1608	1	SA
....4	R1619	2007-000070	R-CHIP;0ohm,5%,1/10W,TP,1608	1	SA
....4	R1620	2007-000070	R-CHIP;0ohm,5%,1/10W,TP,1608	1	SA
....4	R1621	2007-000070	R-CHIP;0ohm,5%,1/10W,TP,1608	1	SA
....4	R1627	2007-000070	R-CHIP;0ohm,5%,1/10W,TP,1608	1	SA
....4	R1701	2007-000070	R-CHIP;0ohm,5%,1/10W,TP,1608	1	SA
....4	R235	2007-000070	R-CHIP;0ohm,5%,1/10W,TP,1608	1	SA
....4	R237	2007-000070	R-CHIP;0ohm,5%,1/10W,TP,1608	1	SA
....4	R246	2007-000070	R-CHIP;0ohm,5%,1/10W,TP,1608	1	SA
....4	R247	2007-000070	R-CHIP;0ohm,5%,1/10W,TP,1608	1	SA
....4	R248	2007-000070	R-CHIP;0ohm,5%,1/10W,TP,1608	1	SA
....4	R249	2007-000070	R-CHIP;0ohm,5%,1/10W,TP,1608	1	SA
....4	R259	2007-000070	R-CHIP;0ohm,5%,1/10W,TP,1608	1	SA
....4	R261	2007-000070	R-CHIP;0ohm,5%,1/10W,TP,1608	1	SA
....4	R262	2007-000070	R-CHIP;0ohm,5%,1/10W,TP,1608	1	SA
....4	R272	2007-000070	R-CHIP;0ohm,5%,1/10W,TP,1608	1	SA
....4	R329	2007-000070	R-CHIP;0ohm,5%,1/10W,TP,1608	1	SA
....4	R405	2007-000070	R-CHIP;0ohm,5%,1/10W,TP,1608	1	SA
....4	R406	2007-000070	R-CHIP;0ohm,5%,1/10W,TP,1608	1	SA
....4	R506	2007-000070	R-CHIP;0ohm,5%,1/10W,TP,1608	1	SA
....4	R507	2007-000070	R-CHIP;0ohm,5%,1/10W,TP,1608	1	SA
....4	R509	2007-000070	R-CHIP;0ohm,5%,1/10W,TP,1608	1	SA
....4	R511	2007-000070	R-CHIP;0ohm,5%,1/10W,TP,1608	1	SA
....4	R521	2007-000070	R-CHIP;0ohm,5%,1/10W,TP,1608	1	SA
....4	R522	2007-000070	R-CHIP;0ohm,5%,1/10W,TP,1608	1	SA
....4	R701	2007-000070	R-CHIP;0ohm,5%,1/10W,TP,1608	1	SA
....4	R702	2007-000070	R-CHIP;0ohm,5%,1/10W,TP,1608	1	SA
....4	R704	2007-000070	R-CHIP;0ohm,5%,1/10W,TP,1608	1	SA
....4	R705	2007-000070	R-CHIP;0ohm,5%,1/10W,TP,1608	1	SA
....4	R708	2007-000070	R-CHIP;0ohm,5%,1/10W,TP,1608	1	SA
....4	R709	2007-000070	R-CHIP;0ohm,5%,1/10W,TP,1608	1	SA
....4	R807	2007-000070	R-CHIP;0ohm,5%,1/10W,TP,1608	1	SA
....4	R835	2007-000070	R-CHIP;0ohm,5%,1/10W,TP,1608	1	SA
....4	R909	2007-000070	R-CHIP;0ohm,5%,1/10W,TP,1608	1	SA
....4	R922	2007-000070	R-CHIP;0ohm,5%,1/10W,TP,1608	1	SA
....4	R923	2007-000070	R-CHIP;0ohm,5%,1/10W,TP,1608	1	SA
....4	R925	2007-000070	R-CHIP;0ohm,5%,1/10W,TP,1608	1	SA
....4	R929	2007-000070	R-CHIP;0ohm,5%,1/10W,TP,1608	1	SA
....4	R930	2007-000070	R-CHIP;0ohm,5%,1/10W,TP,1608	1	SA
....4	R933	2007-000070	R-CHIP;0ohm,5%,1/10W,TP,1608	1	SA
....4	R935	2007-000070	R-CHIP;0ohm,5%,1/10W,TP,1608	1	SA
....4	R936	2007-000070	R-CHIP;0ohm,5%,1/10W,TP,1608	1	SA
....4	R1040	2007-000071	R-CHIP;22ohm,5%,1/10W,TP,1608	1	SA
....4	R1101	2007-000071	R-CHIP;22ohm,5%,1/10W,TP,1608	1	SA
....4	R1102	2007-000071	R-CHIP;22ohm,5%,1/10W,TP,1608	1	SA
....4	R1204	2007-000071	R-CHIP;22ohm,5%,1/10W,TP,1608	1	SA
....4	R1205	2007-000071	R-CHIP;22ohm,5%,1/10W,TP,1608	1	SA
....4	R1206	2007-000071	R-CHIP;22ohm,5%,1/10W,TP,1608	1	SA
....4	R1207	2007-000071	R-CHIP;22ohm,5%,1/10W,TP,1608	1	SA
....4	R1322	2007-000071	R-CHIP;22ohm,5%,1/10W,TP,1608	1	SA
....4	R1409	2007-000071	R-CHIP;22ohm,5%,1/10W,TP,1608	1	SA
....4	R1410	2007-000071	R-CHIP;22ohm,5%,1/10W,TP,1608	1	SA
....4	R1412	2007-000071	R-CHIP;22ohm,5%,1/10W,TP,1608	1	SA
....4	R1414	2007-000071	R-CHIP;22ohm,5%,1/10W,TP,1608	1	SA
....4	R253	2007-000071	R-CHIP;22ohm,5%,1/10W,TP,1608	1	SA
....4	R323	2007-000071	R-CHIP;22ohm,5%,1/10W,TP,1608	1	SA
....4	R722	2007-000071	R-CHIP;22ohm,5%,1/10W,TP,1608	1	SA
....4	R723	2007-000071	R-CHIP;22ohm,5%,1/10W,TP,1608	1	SA
....4	R724	2007-000071	R-CHIP;22ohm,5%,1/10W,TP,1608	1	SA
....4	R810	2007-000071	R-CHIP;22ohm,5%,1/10W,TP,1608	1	SA
....4	R814	2007-000071	R-CHIP;22ohm,5%,1/10W,TP,1608	1	SA

Level	Loc. No.	Code No.	Description & Specification	Q'ty	SA/SNA
....4	R817	2007-000071	R-CHIP;22ohm,5%,1/10W,TP,1608	1	SA
....4	R822	2007-000071	R-CHIP;22ohm,5%,1/10W,TP,1608	1	SA
....4	R836	2007-000071	R-CHIP;22ohm,5%,1/10W,TP,1608	1	SA
....4	R837	2007-000071	R-CHIP;22ohm,5%,1/10W,TP,1608	1	SA
....4	R874	2007-000071	R-CHIP;22ohm,5%,1/10W,TP,1608	1	SA
....4	R876	2007-000071	R-CHIP;22ohm,5%,1/10W,TP,1608	1	SA
....4	R878	2007-000071	R-CHIP;22ohm,5%,1/10W,TP,1608	1	SA
....4	R879	2007-000071	R-CHIP;22ohm,5%,1/10W,TP,1608	1	SA
....4	R882	2007-000071	R-CHIP;22ohm,5%,1/10W,TP,1608	1	SA
....4	R883	2007-000071	R-CHIP;22ohm,5%,1/10W,TP,1608	1	SA
....4	R884	2007-000071	R-CHIP;22ohm,5%,1/10W,TP,1608	1	SA
....4	R885	2007-000071	R-CHIP;22ohm,5%,1/10W,TP,1608	1	SA
....4	R886	2007-000071	R-CHIP;22ohm,5%,1/10W,TP,1608	1	SA
....4	R887	2007-000071	R-CHIP;22ohm,5%,1/10W,TP,1608	1	SA
....4	R888	2007-000071	R-CHIP;22ohm,5%,1/10W,TP,1608	1	SA
....4	R889	2007-000071	R-CHIP;22ohm,5%,1/10W,TP,1608	1	SA
....4	R890	2007-000071	R-CHIP;22ohm,5%,1/10W,TP,1608	1	SA
....4	R891	2007-000071	R-CHIP;22ohm,5%,1/10W,TP,1608	1	SA
....4	R892	2007-000071	R-CHIP;22ohm,5%,1/10W,TP,1608	1	SA
....4	R893	2007-000071	R-CHIP;22ohm,5%,1/10W,TP,1608	1	SA
....4	R1379	2007-000072	R-CHIP;47ohm,5%,1/10W,TP,1608	1	SA
....4	R1380	2007-000072	R-CHIP;47ohm,5%,1/10W,TP,1608	1	SA
....4	R1413	2007-000072	R-CHIP;47ohm,5%,1/10W,TP,1608	1	SA
....4	R1415	2007-000072	R-CHIP;47ohm,5%,1/10W,TP,1608	1	SA
....4	R1416	2007-000072	R-CHIP;47ohm,5%,1/10W,TP,1608	1	SA
....4	R1417	2007-000072	R-CHIP;47ohm,5%,1/10W,TP,1608	1	SA
....4	R711	2007-000072	R-CHIP;47ohm,5%,1/10W,TP,1608	1	SA
....4	R712	2007-000072	R-CHIP;47ohm,5%,1/10W,TP,1608	1	SA
....4	R803	2007-000072	R-CHIP;47ohm,5%,1/10W,TP,1608	1	SA
....4	R804	2007-000072	R-CHIP;47ohm,5%,1/10W,TP,1608	1	SA
....4	R816	2007-000072	R-CHIP;47ohm,5%,1/10W,TP,1608	1	SA
....4	R818	2007-000072	R-CHIP;47ohm,5%,1/10W,TP,1608	1	SA
....4	R831	2007-000072	R-CHIP;47ohm,5%,1/10W,TP,1608	1	SA
....4	R832	2007-000072	R-CHIP;47ohm,5%,1/10W,TP,1608	1	SA
....4	R1019	2007-000074	R-CHIP;100ohm,5%,1/10W,TP,1608	1	SA
....4	R1034	2007-000074	R-CHIP;100ohm,5%,1/10W,TP,1608	1	SA
....4	R1035	2007-000074	R-CHIP;100ohm,5%,1/10W,TP,1608	1	SA
....4	R1036	2007-000074	R-CHIP;100ohm,5%,1/10W,TP,1608	1	SA
....4	R1037	2007-000074	R-CHIP;100ohm,5%,1/10W,TP,1608	1	SA
....4	R1039	2007-000074	R-CHIP;100ohm,5%,1/10W,TP,1608	1	SA
....4	R1044	2007-000074	R-CHIP;100ohm,5%,1/10W,TP,1608	1	SA
....4	R1050	2007-000074	R-CHIP;100ohm,5%,1/10W,TP,1608	1	SA
....4	R1058	2007-000074	R-CHIP;100ohm,5%,1/10W,TP,1608	1	SA
....4	R1302	2007-000074	R-CHIP;100ohm,5%,1/10W,TP,1608	1	SA
....4	R1303	2007-000074	R-CHIP;100ohm,5%,1/10W,TP,1608	1	SA
....4	R1305	2007-000074	R-CHIP;100ohm,5%,1/10W,TP,1608	1	SA
....4	R1306	2007-000074	R-CHIP;100ohm,5%,1/10W,TP,1608	1	SA
....4	R1307	2007-000074	R-CHIP;100ohm,5%,1/10W,TP,1608	1	SA
....4	R1308	2007-000074	R-CHIP;100ohm,5%,1/10W,TP,1608	1	SA
....4	R1309	2007-000074	R-CHIP;100ohm,5%,1/10W,TP,1608	1	SA
....4	R1310	2007-000074	R-CHIP;100ohm,5%,1/10W,TP,1608	1	SA
....4	R1311	2007-000074	R-CHIP;100ohm,5%,1/10W,TP,1608	1	SA
....4	R1313	2007-000074	R-CHIP;100ohm,5%,1/10W,TP,1608	1	SA
....4	R1314	2007-000074	R-CHIP;100ohm,5%,1/10W,TP,1608	1	SA
....4	R1315	2007-000074	R-CHIP;100ohm,5%,1/10W,TP,1608	1	SA
....4	R1316	2007-000074	R-CHIP;100ohm,5%,1/10W,TP,1608	1	SA
....4	R1317	2007-000074	R-CHIP;100ohm,5%,1/10W,TP,1608	1	SA
....4	R1327	2007-000074	R-CHIP;100ohm,5%,1/10W,TP,1608	1	SA
....4	R1328	2007-000074	R-CHIP;100ohm,5%,1/10W,TP,1608	1	SA
....4	R1330	2007-000074	R-CHIP;100ohm,5%,1/10W,TP,1608	1	SA
....4	R1331	2007-000074	R-CHIP;100ohm,5%,1/10W,TP,1608	1	SA
....4	R1332	2007-000074	R-CHIP;100ohm,5%,1/10W,TP,1608	1	SA
....4	R1333	2007-000074	R-CHIP;100ohm,5%,1/10W,TP,1608	1	SA
....4	R1336	2007-000074	R-CHIP;100ohm,5%,1/10W,TP,1608	1	SA
....4	R1337	2007-000074	R-CHIP;100ohm,5%,1/10W,TP,1608	1	SA
....4	R1338	2007-000074	R-CHIP;100ohm,5%,1/10W,TP,1608	1	SA
....4	R1339	2007-000074	R-CHIP;100ohm,5%,1/10W,TP,1608	1	SA
....4	R1341	2007-000074	R-CHIP;100ohm,5%,1/10W,TP,1608	1	SA
....4	R1342	2007-000074	R-CHIP;100ohm,5%,1/10W,TP,1608	1	SA
....4	R1346	2007-000074	R-CHIP;100ohm,5%,1/10W,TP,1608	1	SA
....4	R1347	2007-000074	R-CHIP;100ohm,5%,1/10W,TP,1608	1	SA
....4	R1348	2007-000074	R-CHIP;100ohm,5%,1/10W,TP,1608	1	SA

Level	Loc. No.	Code No.	Description & Specification	Q'ty	SA/SNA
....4	R1349	2007-000074	R-CHIP;100ohm,5%,1/10W,TP,1608	1	SA
....4	R1350	2007-000074	R-CHIP;100ohm,5%,1/10W,TP,1608	1	SA
....4	R1381	2007-000074	R-CHIP;100ohm,5%,1/10W,TP,1608	1	SA
....4	R1382	2007-000074	R-CHIP;100ohm,5%,1/10W,TP,1608	1	SA
....4	R1383	2007-000074	R-CHIP;100ohm,5%,1/10W,TP,1608	1	SA
....4	R1384	2007-000074	R-CHIP;100ohm,5%,1/10W,TP,1608	1	SA
....4	R1401	2007-000074	R-CHIP;100ohm,5%,1/10W,TP,1608	1	SA
....4	R1402	2007-000074	R-CHIP;100ohm,5%,1/10W,TP,1608	1	SA
....4	R1403	2007-000074	R-CHIP;100ohm,5%,1/10W,TP,1608	1	SA
....4	R1404	2007-000074	R-CHIP;100ohm,5%,1/10W,TP,1608	1	SA
....4	R1405	2007-000074	R-CHIP;100ohm,5%,1/10W,TP,1608	1	SA
....4	R1406	2007-000074	R-CHIP;100ohm,5%,1/10W,TP,1608	1	SA
....4	R1407	2007-000074	R-CHIP;100ohm,5%,1/10W,TP,1608	1	SA
....4	R1408	2007-000074	R-CHIP;100ohm,5%,1/10W,TP,1608	1	SA
....4	R1612	2007-000074	R-CHIP;100ohm,5%,1/10W,TP,1608	1	SA
....4	R1628	2007-000074	R-CHIP;100ohm,5%,1/10W,TP,1608	1	SA
....4	R223	2007-000074	R-CHIP;100ohm,5%,1/10W,TP,1608	1	SA
....4	R225	2007-000074	R-CHIP;100ohm,5%,1/10W,TP,1608	1	SA
....4	R226	2007-000074	R-CHIP;100ohm,5%,1/10W,TP,1608	1	SA
....4	R234	2007-000074	R-CHIP;100ohm,5%,1/10W,TP,1608	1	SA
....4	R236	2007-000074	R-CHIP;100ohm,5%,1/10W,TP,1608	1	SA
....4	R238	2007-000074	R-CHIP;100ohm,5%,1/10W,TP,1608	1	SA
....4	R239	2007-000074	R-CHIP;100ohm,5%,1/10W,TP,1608	1	SA
....4	R240	2007-000074	R-CHIP;100ohm,5%,1/10W,TP,1608	1	SA
....4	R241	2007-000074	R-CHIP;100ohm,5%,1/10W,TP,1608	1	SA
....4	R242	2007-000074	R-CHIP;100ohm,5%,1/10W,TP,1608	1	SA
....4	R243	2007-000074	R-CHIP;100ohm,5%,1/10W,TP,1608	1	SA
....4	R244	2007-000074	R-CHIP;100ohm,5%,1/10W,TP,1608	1	SA
....4	R250	2007-000074	R-CHIP;100ohm,5%,1/10W,TP,1608	1	SA
....4	R251	2007-000074	R-CHIP;100ohm,5%,1/10W,TP,1608	1	SA
....4	R252	2007-000074	R-CHIP;100ohm,5%,1/10W,TP,1608	1	SA
....4	R254	2007-000074	R-CHIP;100ohm,5%,1/10W,TP,1608	1	SA
....4	R255	2007-000074	R-CHIP;100ohm,5%,1/10W,TP,1608	1	SA
....4	R256	2007-000074	R-CHIP;100ohm,5%,1/10W,TP,1608	1	SA
....4	R258	2007-000074	R-CHIP;100ohm,5%,1/10W,TP,1608	1	SA
....4	R320	2007-000074	R-CHIP;100ohm,5%,1/10W,TP,1608	1	SA
....4	R321	2007-000074	R-CHIP;100ohm,5%,1/10W,TP,1608	1	SA
....4	R325	2007-000074	R-CHIP;100ohm,5%,1/10W,TP,1608	1	SA
....4	R326	2007-000074	R-CHIP;100ohm,5%,1/10W,TP,1608	1	SA
....4	R327	2007-000074	R-CHIP;100ohm,5%,1/10W,TP,1608	1	SA
....4	R407	2007-000074	R-CHIP;100ohm,5%,1/10W,TP,1608	1	SA
....4	R502	2007-000074	R-CHIP;100ohm,5%,1/10W,TP,1608	1	SA
....4	R510	2007-000074	R-CHIP;100ohm,5%,1/10W,TP,1608	1	SA
....4	R601	2007-000074	R-CHIP;100ohm,5%,1/10W,TP,1608	1	SA
....4	R603	2007-000074	R-CHIP;100ohm,5%,1/10W,TP,1608	1	SA
....4	R614	2007-000074	R-CHIP;100ohm,5%,1/10W,TP,1608	1	SA
....4	R615	2007-000074	R-CHIP;100ohm,5%,1/10W,TP,1608	1	SA
....4	R616	2007-000074	R-CHIP;100ohm,5%,1/10W,TP,1608	1	SA
....4	R619	2007-000074	R-CHIP;100ohm,5%,1/10W,TP,1608	1	SA
....4	R620	2007-000074	R-CHIP;100ohm,5%,1/10W,TP,1608	1	SA
....4	R703	2007-000074	R-CHIP;100ohm,5%,1/10W,TP,1608	1	SA
....4	R706	2007-000074	R-CHIP;100ohm,5%,1/10W,TP,1608	1	SA
....4	R707	2007-000074	R-CHIP;100ohm,5%,1/10W,TP,1608	1	SA
....4	R710	2007-000074	R-CHIP;100ohm,5%,1/10W,TP,1608	1	SA
....4	R720	2007-000074	R-CHIP;100ohm,5%,1/10W,TP,1608	1	SA
....4	R721	2007-000074	R-CHIP;100ohm,5%,1/10W,TP,1608	1	SA
....4	R821	2007-000074	R-CHIP;100ohm,5%,1/10W,TP,1608	1	SA
....4	R823	2007-000074	R-CHIP;100ohm,5%,1/10W,TP,1608	1	SA
....4	R824	2007-000074	R-CHIP;100ohm,5%,1/10W,TP,1608	1	SA
....4	R825	2007-000074	R-CHIP;100ohm,5%,1/10W,TP,1608	1	SA
....4	R826	2007-000074	R-CHIP;100ohm,5%,1/10W,TP,1608	1	SA
....4	R1056	2007-000075	R-CHIP;220ohm,5%,1/10W,TP,1608	1	SA
....4	R515	2007-000076	R-CHIP;330ohm,5%,1/10W,TP,1608	1	SA
....4	R1046	2007-000077	R-CHIP;470ohm,5%,1/10W,TP,1608	1	SA
....4	R1434	2007-000077	R-CHIP;470ohm,5%,1/10W,TP,1608	1	SA
....4	R1435	2007-000077	R-CHIP;470ohm,5%,1/10W,TP,1608	1	SA
....4	R274	2007-000077	R-CHIP;470ohm,5%,1/10W,TP,1608	1	SA
....4	R609	2007-000077	R-CHIP;470ohm,5%,1/10W,TP,1608	1	SA
....4	R610	2007-000077	R-CHIP;470ohm,5%,1/10W,TP,1608	1	SA
....4	R612	2007-000077	R-CHIP;470ohm,5%,1/10W,TP,1608	1	SA
....4	R613	2007-000077	R-CHIP;470ohm,5%,1/10W,TP,1608	1	SA
....4	R827	2007-000077	R-CHIP;470ohm,5%,1/10W,TP,1608	1	SA

Level	Loc. No.	Code No.	Description & Specification	Q'ty	SA/SNA
....4	R828	2007-000077	R-CHIP;470ohm,5%,1/10W,TP,1608	1	SA
....4	R859	2007-000077	R-CHIP;470ohm,5%,1/10W,TP,1608	1	SA
....4	R860	2007-000077	R-CHIP;470ohm,5%,1/10W,TP,1608	1	SA
....4	R1002	2007-000078	R-CHIP;1Kohm,5%,1/10W,TP,1608	1	SA
....4	R1043	2007-000078	R-CHIP;1Kohm,5%,1/10W,TP,1608	1	SA
....4	R1051	2007-000078	R-CHIP;1Kohm,5%,1/10W,TP,1608	1	SA
....4	R112	2007-000078	R-CHIP;1Kohm,5%,1/10W,TP,1608	1	SA
....4	R1312	2007-000078	R-CHIP;1Kohm,5%,1/10W,TP,1608	1	SA
....4	R1323	2007-000078	R-CHIP;1Kohm,5%,1/10W,TP,1608	1	SA
....4	R1340	2007-000078	R-CHIP;1Kohm,5%,1/10W,TP,1608	1	SA
....4	R233	2007-000078	R-CHIP;1Kohm,5%,1/10W,TP,1608	1	SA
....4	R266	2007-000078	R-CHIP;1Kohm,5%,1/10W,TP,1608	1	SA
....4	R408	2007-000078	R-CHIP;1Kohm,5%,1/10W,TP,1608	1	SA
....4	R415	2007-000078	R-CHIP;1Kohm,5%,1/10W,TP,1608	1	SA
....4	R416	2007-000078	R-CHIP;1Kohm,5%,1/10W,TP,1608	1	SA
....4	R508	2007-000078	R-CHIP;1Kohm,5%,1/10W,TP,1608	1	SA
....4	R524	2007-000078	R-CHIP;1Kohm,5%,1/10W,TP,1608	1	SA
....4	R847	2007-000078	R-CHIP;1Kohm,5%,1/10W,TP,1608	1	SA
....4	R924	2007-000078	R-CHIP;1Kohm,5%,1/10W,TP,1608	1	SA
....4	R849	2007-000079	R-CHIP;1.8Kohm,5%,1/10W,TP,1608	1	SA
....4	R1048	2007-000082	R-CHIP;3.3Kohm,5%,1/10W,TP,1608	1	SA
....4	R1049	2007-000082	R-CHIP;3.3Kohm,5%,1/10W,TP,1608	1	SA
....4	R1045	2007-000084	R-CHIP;4.7Kohm,5%,1/10W,TP,1608	1	SA
....4	R113	2007-000084	R-CHIP;4.7Kohm,5%,1/10W,TP,1608	1	SA
....4	R1301	2007-000084	R-CHIP;4.7Kohm,5%,1/10W,TP,1608	1	SA
....4	R1325	2007-000084	R-CHIP;4.7Kohm,5%,1/10W,TP,1608	1	SA
....4	R1361	2007-000084	R-CHIP;4.7Kohm,5%,1/10W,TP,1608	1	SA
....4	R1362	2007-000084	R-CHIP;4.7Kohm,5%,1/10W,TP,1608	1	SA
....4	R1363	2007-000084	R-CHIP;4.7Kohm,5%,1/10W,TP,1608	1	SA
....4	R1364	2007-000084	R-CHIP;4.7Kohm,5%,1/10W,TP,1608	1	SA
....4	R1365	2007-000084	R-CHIP;4.7Kohm,5%,1/10W,TP,1608	1	SA
....4	R1366	2007-000084	R-CHIP;4.7Kohm,5%,1/10W,TP,1608	1	SA
....4	R1367	2007-000084	R-CHIP;4.7Kohm,5%,1/10W,TP,1608	1	SA
....4	R1368	2007-000084	R-CHIP;4.7Kohm,5%,1/10W,TP,1608	1	SA
....4	R1369	2007-000084	R-CHIP;4.7Kohm,5%,1/10W,TP,1608	1	SA
....4	R1370	2007-000084	R-CHIP;4.7Kohm,5%,1/10W,TP,1608	1	SA
....4	R1371	2007-000084	R-CHIP;4.7Kohm,5%,1/10W,TP,1608	1	SA
....4	R1372	2007-000084	R-CHIP;4.7Kohm,5%,1/10W,TP,1608	1	SA
....4	R1373	2007-000084	R-CHIP;4.7Kohm,5%,1/10W,TP,1608	1	SA
....4	R1374	2007-000084	R-CHIP;4.7Kohm,5%,1/10W,TP,1608	1	SA
....4	R1375	2007-000084	R-CHIP;4.7Kohm,5%,1/10W,TP,1608	1	SA
....4	R1386	2007-000084	R-CHIP;4.7Kohm,5%,1/10W,TP,1608	1	SA
....4	R1387	2007-000084	R-CHIP;4.7Kohm,5%,1/10W,TP,1608	1	SA
....4	R1388	2007-000084	R-CHIP;4.7Kohm,5%,1/10W,TP,1608	1	SA
....4	R1389	2007-000084	R-CHIP;4.7Kohm,5%,1/10W,TP,1608	1	SA
....4	R1390	2007-000084	R-CHIP;4.7Kohm,5%,1/10W,TP,1608	1	SA
....4	R1418	2007-000084	R-CHIP;4.7Kohm,5%,1/10W,TP,1608	1	SA
....4	R1419	2007-000084	R-CHIP;4.7Kohm,5%,1/10W,TP,1608	1	SA
....4	R1420	2007-000084	R-CHIP;4.7Kohm,5%,1/10W,TP,1608	1	SA
....4	R1421	2007-000084	R-CHIP;4.7Kohm,5%,1/10W,TP,1608	1	SA
....4	R1422	2007-000084	R-CHIP;4.7Kohm,5%,1/10W,TP,1608	1	SA
....4	R1423	2007-000084	R-CHIP;4.7Kohm,5%,1/10W,TP,1608	1	SA
....4	R1424	2007-000084	R-CHIP;4.7Kohm,5%,1/10W,TP,1608	1	SA
....4	R1605	2007-000084	R-CHIP;4.7Kohm,5%,1/10W,TP,1608	1	SA
....4	R1607	2007-000084	R-CHIP;4.7Kohm,5%,1/10W,TP,1608	1	SA
....4	R1609	2007-000084	R-CHIP;4.7Kohm,5%,1/10W,TP,1608	1	SA
....4	R1613	2007-000084	R-CHIP;4.7Kohm,5%,1/10W,TP,1608	1	SA
....4	R1622	2007-000084	R-CHIP;4.7Kohm,5%,1/10W,TP,1608	1	SA
....4	R1623	2007-000084	R-CHIP;4.7Kohm,5%,1/10W,TP,1608	1	SA
....4	R1624	2007-000084	R-CHIP;4.7Kohm,5%,1/10W,TP,1608	1	SA
....4	R1625	2007-000084	R-CHIP;4.7Kohm,5%,1/10W,TP,1608	1	SA
....4	R1626	2007-000084	R-CHIP;4.7Kohm,5%,1/10W,TP,1608	1	SA
....4	R257	2007-000084	R-CHIP;4.7Kohm,5%,1/10W,TP,1608	1	SA
....4	R263	2007-000084	R-CHIP;4.7Kohm,5%,1/10W,TP,1608	1	SA
....4	R267	2007-000084	R-CHIP;4.7Kohm,5%,1/10W,TP,1608	1	SA
....4	R268	2007-000084	R-CHIP;4.7Kohm,5%,1/10W,TP,1608	1	SA
....4	R322	2007-000084	R-CHIP;4.7Kohm,5%,1/10W,TP,1608	1	SA
....4	R328	2007-000084	R-CHIP;4.7Kohm,5%,1/10W,TP,1608	1	SA
....4	R414	2007-000084	R-CHIP;4.7Kohm,5%,1/10W,TP,1608	1	SA
....4	R523	2007-000084	R-CHIP;4.7Kohm,5%,1/10W,TP,1608	1	SA
....4	R719	2007-000084	R-CHIP;4.7Kohm,5%,1/10W,TP,1608	1	SA
....4	R916	2007-000084	R-CHIP;4.7Kohm,5%,1/10W,TP,1608	1	SA

Level	Loc. No.	Code No.	Description & Specification	Q'ty	SA/SNA
....4	R919	2007-000084	R-CHIP;4.7Kohm,5%,1/10W,TP,1608	1	SA
....4	R921	2007-000084	R-CHIP;4.7Kohm,5%,1/10W,TP,1608	1	SA
....4	R926	2007-000084	R-CHIP;4.7Kohm,5%,1/10W,TP,1608	1	SA
....4	R927	2007-000084	R-CHIP;4.7Kohm,5%,1/10W,TP,1608	1	SA
....4	R404	2007-000087	R-CHIP;6.8Kohm,5%,1/10W,TP,1608	1	SA
....4	R102	2007-000090	R-CHIP;10Kohm,5%,1/10W,TP,1608	1	SA
....4	R103	2007-000090	R-CHIP;10Kohm,5%,1/10W,TP,1608	1	SA
....4	R106	2007-000090	R-CHIP;10Kohm,5%,1/10W,TP,1608	1	SA
....4	R107	2007-000090	R-CHIP;10Kohm,5%,1/10W,TP,1608	1	SA
....4	R1104	2007-000090	R-CHIP;10Kohm,5%,1/10W,TP,1608	1	SA
....4	R1334	2007-000090	R-CHIP;10Kohm,5%,1/10W,TP,1608	1	SA
....4	R1335	2007-000090	R-CHIP;10Kohm,5%,1/10W,TP,1608	1	SA
....4	R1376	2007-000090	R-CHIP;10Kohm,5%,1/10W,TP,1608	1	SA
....4	R1377	2007-000090	R-CHIP;10Kohm,5%,1/10W,TP,1608	1	SA
....4	R1378	2007-000090	R-CHIP;10Kohm,5%,1/10W,TP,1608	1	SA
....4	R1432	2007-000090	R-CHIP;10Kohm,5%,1/10W,TP,1608	1	SA
....4	R1433	2007-000090	R-CHIP;10Kohm,5%,1/10W,TP,1608	1	SA
....4	R1608	2007-000090	R-CHIP;10Kohm,5%,1/10W,TP,1608	1	SA
....4	R201	2007-000090	R-CHIP;10Kohm,5%,1/10W,TP,1608	1	SA
....4	R202	2007-000090	R-CHIP;10Kohm,5%,1/10W,TP,1608	1	SA
....4	R203	2007-000090	R-CHIP;10Kohm,5%,1/10W,TP,1608	1	SA
....4	R204	2007-000090	R-CHIP;10Kohm,5%,1/10W,TP,1608	1	SA
....4	R205	2007-000090	R-CHIP;10Kohm,5%,1/10W,TP,1608	1	SA
....4	R208	2007-000090	R-CHIP;10Kohm,5%,1/10W,TP,1608	1	SA
....4	R210	2007-000090	R-CHIP;10Kohm,5%,1/10W,TP,1608	1	SA
....4	R212	2007-000090	R-CHIP;10Kohm,5%,1/10W,TP,1608	1	SA
....4	R213	2007-000090	R-CHIP;10Kohm,5%,1/10W,TP,1608	1	SA
....4	R214	2007-000090	R-CHIP;10Kohm,5%,1/10W,TP,1608	1	SA
....4	R215	2007-000090	R-CHIP;10Kohm,5%,1/10W,TP,1608	1	SA
....4	R217	2007-000090	R-CHIP;10Kohm,5%,1/10W,TP,1608	1	SA
....4	R218	2007-000090	R-CHIP;10Kohm,5%,1/10W,TP,1608	1	SA
....4	R219	2007-000090	R-CHIP;10Kohm,5%,1/10W,TP,1608	1	SA
....4	R220	2007-000090	R-CHIP;10Kohm,5%,1/10W,TP,1608	1	SA
....4	R221	2007-000090	R-CHIP;10Kohm,5%,1/10W,TP,1608	1	SA
....4	R222	2007-000090	R-CHIP;10Kohm,5%,1/10W,TP,1608	1	SA
....4	R227	2007-000090	R-CHIP;10Kohm,5%,1/10W,TP,1608	1	SA
....4	R230	2007-000090	R-CHIP;10Kohm,5%,1/10W,TP,1608	1	SA
....4	R231	2007-000090	R-CHIP;10Kohm,5%,1/10W,TP,1608	1	SA
....4	R260	2007-000090	R-CHIP;10Kohm,5%,1/10W,TP,1608	1	SA
....4	R265	2007-000090	R-CHIP;10Kohm,5%,1/10W,TP,1608	1	SA
....4	R271	2007-000090	R-CHIP;10Kohm,5%,1/10W,TP,1608	1	SA
....4	R273	2007-000090	R-CHIP;10Kohm,5%,1/10W,TP,1608	1	SA
....4	R309	2007-000090	R-CHIP;10Kohm,5%,1/10W,TP,1608	1	SA
....4	R310	2007-000090	R-CHIP;10Kohm,5%,1/10W,TP,1608	1	SA
....4	R331	2007-000090	R-CHIP;10Kohm,5%,1/10W,TP,1608	1	SA
....4	R412	2007-000090	R-CHIP;10Kohm,5%,1/10W,TP,1608	1	SA
....4	R419	2007-000090	R-CHIP;10Kohm,5%,1/10W,TP,1608	1	SA
....4	R801	2007-000090	R-CHIP;10Kohm,5%,1/10W,TP,1608	1	SA
....4	R802	2007-000090	R-CHIP;10Kohm,5%,1/10W,TP,1608	1	SA
....4	R806	2007-000090	R-CHIP;10Kohm,5%,1/10W,TP,1608	1	SA
....4	R808	2007-000090	R-CHIP;10Kohm,5%,1/10W,TP,1608	1	SA
....4	R809	2007-000090	R-CHIP;10Kohm,5%,1/10W,TP,1608	1	SA
....4	R829	2007-000090	R-CHIP;10Kohm,5%,1/10W,TP,1608	1	SA
....4	R830	2007-000090	R-CHIP;10Kohm,5%,1/10W,TP,1608	1	SA
....4	R834	2007-000090	R-CHIP;10Kohm,5%,1/10W,TP,1608	1	SA
....4	R913	2007-000090	R-CHIP;10Kohm,5%,1/10W,TP,1608	1	SA
....4	R915	2007-000090	R-CHIP;10Kohm,5%,1/10W,TP,1608	1	SA
....4	R928	2007-000090	R-CHIP;10Kohm,5%,1/10W,TP,1608	1	SA
....4	R934	2007-000090	R-CHIP;10Kohm,5%,1/10W,TP,1608	1	SA
....4	R937	2007-000090	R-CHIP;10Kohm,5%,1/10W,TP,1608	1	SA
....4	R108	2007-000092	R-CHIP;15Kohm,5%,1/10W,TP,1608	1	SA
....4	R110	2007-000092	R-CHIP;15Kohm,5%,1/10W,TP,1608	1	SA
....4	R1320	2007-000092	R-CHIP;15Kohm,5%,1/10W,TP,1608	1	SA
....4	R1321	2007-000092	R-CHIP;15Kohm,5%,1/10W,TP,1608	1	SA
....4	R333	2007-000093	R-CHIP;20Kohm,5%,1/10W,TP,1608	1	SA
....4	R334	2007-000093	R-CHIP;20Kohm,5%,1/10W,TP,1608	1	SA
....4	R848	2007-000093	R-CHIP;20Kohm,5%,1/10W,TP,1608	1	SA
....4	R517	2007-000094	R-CHIP;22Kohm,5%,1/10W,TP,1608	1	SA
....4	R1425	2007-000097	R-CHIP;47Kohm,5%,1/10W,TP,1608	1	SA
....4	R245	2007-000097	R-CHIP;47Kohm,5%,1/10W,TP,1608	1	SA
....4	R301	2007-000100	R-CHIP;68Kohm,5%,1/10W,TP,1608	1	SA
....4	R302	2007-000100	R-CHIP;68Kohm,5%,1/10W,TP,1608	1	SA

Level	Loc. No.	Code No.	Description & Specification	Q'ty	SA/SNA
....4	R303	2007-000100	R-CHIP;68Kohm,5%,1/10W,TP,1608	1	SA
....4	R304	2007-000100	R-CHIP;68Kohm,5%,1/10W,TP,1608	1	SA
....4	R305	2007-000100	R-CHIP;68Kohm,5%,1/10W,TP,1608	1	SA
....4	R306	2007-000100	R-CHIP;68Kohm,5%,1/10W,TP,1608	1	SA
....4	R307	2007-000100	R-CHIP;68Kohm,5%,1/10W,TP,1608	1	SA
....4	R308	2007-000100	R-CHIP;68Kohm,5%,1/10W,TP,1608	1	SA
....4	R311	2007-000100	R-CHIP;68Kohm,5%,1/10W,TP,1608	1	SA
....4	R312	2007-000100	R-CHIP;68Kohm,5%,1/10W,TP,1608	1	SA
....4	R313	2007-000100	R-CHIP;68Kohm,5%,1/10W,TP,1608	1	SA
....4	R314	2007-000100	R-CHIP;68Kohm,5%,1/10W,TP,1608	1	SA
....4	R315	2007-000100	R-CHIP;68Kohm,5%,1/10W,TP,1608	1	SA
....4	R316	2007-000100	R-CHIP;68Kohm,5%,1/10W,TP,1608	1	SA
....4	R317	2007-000100	R-CHIP;68Kohm,5%,1/10W,TP,1608	1	SA
....4	R318	2007-000100	R-CHIP;68Kohm,5%,1/10W,TP,1608	1	SA
....4	R101	2007-000102	R-CHIP;100Kohm,5%,1/10W,TP,1608	1	SA
....4	R330	2007-000102	R-CHIP;100Kohm,5%,1/10W,TP,1608	1	SA
....4	R332	2007-000102	R-CHIP;100Kohm,5%,1/10W,TP,1608	1	SA
....4	R335	2007-000102	R-CHIP;100Kohm,5%,1/10W,TP,1608	1	SA
....4	R336	2007-000102	R-CHIP;100Kohm,5%,1/10W,TP,1608	1	SA
....4	R418	2007-000102	R-CHIP;100Kohm,5%,1/10W,TP,1608	1	SA
....4	R512	2007-000102	R-CHIP;100Kohm,5%,1/10W,TP,1608	1	SA
....4	R520	2007-000102	R-CHIP;100Kohm,5%,1/10W,TP,1608	1	SA
....4	R621	2007-000102	R-CHIP;100Kohm,5%,1/10W,TP,1608	1	SA
....4	R622	2007-000102	R-CHIP;100Kohm,5%,1/10W,TP,1608	1	SA
....4	R504	2007-000106	R-CHIP;220Kohm,5%,1/10W,TP,1608	1	SA
....4	R505	2007-000106	R-CHIP;220Kohm,5%,1/10W,TP,1608	1	SA
....4	R1324	2007-000113	R-CHIP;33ohm,5%,1/10W,TP,1608	1	SA
....4	R1344	2007-000113	R-CHIP;33ohm,5%,1/10W,TP,1608	1	SA
....4	R1351	2007-000113	R-CHIP;33ohm,5%,1/10W,TP,1608	1	SA
....4	R1352	2007-000113	R-CHIP;33ohm,5%,1/10W,TP,1608	1	SA
....4	R1354	2007-000113	R-CHIP;33ohm,5%,1/10W,TP,1608	1	SA
....4	R1356	2007-000113	R-CHIP;33ohm,5%,1/10W,TP,1608	1	SA
....4	R1358	2007-000113	R-CHIP;33ohm,5%,1/10W,TP,1608	1	SA
....4	R1385	2007-000113	R-CHIP;33ohm,5%,1/10W,TP,1608	1	SA
....4	R1501	2007-000113	R-CHIP;33ohm,5%,1/10W,TP,1608	1	SA
....4	R1502	2007-000113	R-CHIP;33ohm,5%,1/10W,TP,1608	1	SA
....4	R1503	2007-000113	R-CHIP;33ohm,5%,1/10W,TP,1608	1	SA
....4	R1504	2007-000113	R-CHIP;33ohm,5%,1/10W,TP,1608	1	SA
....4	R1505	2007-000113	R-CHIP;33ohm,5%,1/10W,TP,1608	1	SA
....4	R1506	2007-000113	R-CHIP;33ohm,5%,1/10W,TP,1608	1	SA
....4	R1507	2007-000113	R-CHIP;33ohm,5%,1/10W,TP,1608	1	SA
....4	R1508	2007-000113	R-CHIP;33ohm,5%,1/10W,TP,1608	1	SA
....4	R1509	2007-000113	R-CHIP;33ohm,5%,1/10W,TP,1608	1	SA
....4	R1510	2007-000113	R-CHIP;33ohm,5%,1/10W,TP,1608	1	SA
....4	R1511	2007-000113	R-CHIP;33ohm,5%,1/10W,TP,1608	1	SA
....4	R1512	2007-000113	R-CHIP;33ohm,5%,1/10W,TP,1608	1	SA
....4	R1513	2007-000113	R-CHIP;33ohm,5%,1/10W,TP,1608	1	SA
....4	R1514	2007-000113	R-CHIP;33ohm,5%,1/10W,TP,1608	1	SA
....4	R1515	2007-000113	R-CHIP;33ohm,5%,1/10W,TP,1608	1	SA
....4	R1516	2007-000113	R-CHIP;33ohm,5%,1/10W,TP,1608	1	SA
....4	R1517	2007-000113	R-CHIP;33ohm,5%,1/10W,TP,1608	1	SA
....4	R1518	2007-000113	R-CHIP;33ohm,5%,1/10W,TP,1608	1	SA
....4	R1606	2007-000113	R-CHIP;33ohm,5%,1/10W,TP,1608	1	SA
....4	R1610	2007-000113	R-CHIP;33ohm,5%,1/10W,TP,1608	1	SA
....4	R1611	2007-000113	R-CHIP;33ohm,5%,1/10W,TP,1608	1	SA
....4	R1614	2007-000113	R-CHIP;33ohm,5%,1/10W,TP,1608	1	SA
....4	R1615	2007-000113	R-CHIP;33ohm,5%,1/10W,TP,1608	1	SA
....4	R1616	2007-000113	R-CHIP;33ohm,5%,1/10W,TP,1608	1	SA
....4	R1618	2007-000113	R-CHIP;33ohm,5%,1/10W,TP,1608	1	SA
....4	R911	2007-000113	R-CHIP;33ohm,5%,1/10W,TP,1608	1	SA
....4	R912	2007-000113	R-CHIP;33ohm,5%,1/10W,TP,1608	1	SA
....4	R914	2007-000113	R-CHIP;33ohm,5%,1/10W,TP,1608	1	SA
....4	R861	2007-000116	R-CHIP;120ohm,5%,1/10W,TP,1608	1	SA
....4	R319	2007-000119	R-CHIP;560ohm,5%,1/10W,TP,1608	1	SA
....4	R715	2007-000123	R-CHIP;1.5Kohm,5%,1/10W,TP,1608	1	SA
....4	R716	2007-000123	R-CHIP;1.5Kohm,5%,1/10W,TP,1608	1	SA
....4	R717	2007-000123	R-CHIP;1.5Kohm,5%,1/10W,TP,1608	1	SA
....4	R850	2007-000123	R-CHIP;1.5Kohm,5%,1/10W,TP,1608	1	SA
....4	R411	2007-000125	R-CHIP;3.9Kohm,5%,1/10W,TP,1608	1	SA
....4	R1426	2007-000130	R-CHIP;39Kohm,5%,1/10W,TP,1608	1	SA
....4	R1427	2007-000130	R-CHIP;39Kohm,5%,1/10W,TP,1608	1	SA
....4	R602	2007-000309	R-CHIP;10ohm,5%,1/10W,TP,1608	1	SA

Level	Loc. No.	Code No.	Description & Specification	Q'ty	SA/SNA
....4	R604	2007-000309	R-CHIP;10ohm,5%,1/10W,TP,1608	1	SA
....4	R605	2007-000309	R-CHIP;10ohm,5%,1/10W,TP,1608	1	SA
....4	R862	2007-000309	R-CHIP;10ohm,5%,1/10W,TP,1608	1	SA
....4	R863	2007-000309	R-CHIP;10ohm,5%,1/10W,TP,1608	1	SA
....4	R864	2007-000309	R-CHIP;10ohm,5%,1/10W,TP,1608	1	SA
....4	R865	2007-000309	R-CHIP;10ohm,5%,1/10W,TP,1608	1	SA
....4	R866	2007-000309	R-CHIP;10ohm,5%,1/10W,TP,1608	1	SA
....4	R867	2007-000309	R-CHIP;10ohm,5%,1/10W,TP,1608	1	SA
....4	R868	2007-000309	R-CHIP;10ohm,5%,1/10W,TP,1608	1	SA
....4	R869	2007-000309	R-CHIP;10ohm,5%,1/10W,TP,1608	1	SA
....4	R870	2007-000309	R-CHIP;10ohm,5%,1/10W,TP,1608	1	SA
....4	R871	2007-000309	R-CHIP;10ohm,5%,1/10W,TP,1608	1	SA
....4	R872	2007-000309	R-CHIP;10ohm,5%,1/10W,TP,1608	1	SA
....4	R873	2007-000309	R-CHIP;10ohm,5%,1/10W,TP,1608	1	SA
....4	R875	2007-000309	R-CHIP;10ohm,5%,1/10W,TP,1608	1	SA
....4	R877	2007-000309	R-CHIP;10ohm,5%,1/10W,TP,1608	1	SA
....4	R880	2007-000309	R-CHIP;10ohm,5%,1/10W,TP,1608	1	SA
....4	R881	2007-000309	R-CHIP;10ohm,5%,1/10W,TP,1608	1	SA
....4	R901	2007-000309	R-CHIP;10ohm,5%,1/10W,TP,1608	1	SA
....4	R902	2007-000309	R-CHIP;10ohm,5%,1/10W,TP,1608	1	SA
....4	R903	2007-000309	R-CHIP;10ohm,5%,1/10W,TP,1608	1	SA
....4	R904	2007-000309	R-CHIP;10ohm,5%,1/10W,TP,1608	1	SA
....4	R905	2007-000309	R-CHIP;10ohm,5%,1/10W,TP,1608	1	SA
....4	R906	2007-000309	R-CHIP;10ohm,5%,1/10W,TP,1608	1	SA
....4	R907	2007-000309	R-CHIP;10ohm,5%,1/10W,TP,1608	1	SA
....4	R908	2007-000309	R-CHIP;10ohm,5%,1/10W,TP,1608	1	SA
....4	R1428	2007-000329	R-CHIP;11Kohm,5%,1/10W,TP,1608	1	SA
....4	R1429	2007-000329	R-CHIP;11Kohm,5%,1/10W,TP,1608	1	SA
....4	R224	2007-000539	R-CHIP;200ohm,5%,1/10W,TP,1608	1	SA
....4	R839	2007-000539	R-CHIP;200ohm,5%,1/10W,TP,1608	1	SA
....4	R840	2007-000539	R-CHIP;200ohm,5%,1/10W,TP,1608	1	SA
....4	R841	2007-000539	R-CHIP;200ohm,5%,1/10W,TP,1608	1	SA
....4	R842	2007-000539	R-CHIP;200ohm,5%,1/10W,TP,1608	1	SA
....4	R843	2007-000539	R-CHIP;200ohm,5%,1/10W,TP,1608	1	SA
....4	R844	2007-000539	R-CHIP;200ohm,5%,1/10W,TP,1608	1	SA
....4	R845	2007-000539	R-CHIP;200ohm,5%,1/10W,TP,1608	1	SA
....4	R846	2007-000539	R-CHIP;200ohm,5%,1/10W,TP,1608	1	SA
....4	R851	2007-000539	R-CHIP;200ohm,5%,1/10W,TP,1608	1	SA
....4	R852	2007-000539	R-CHIP;200ohm,5%,1/10W,TP,1608	1	SA
....4	R853	2007-000539	R-CHIP;200ohm,5%,1/10W,TP,1608	1	SA
....4	R854	2007-000539	R-CHIP;200ohm,5%,1/10W,TP,1608	1	SA
....4	R855	2007-000539	R-CHIP;200ohm,5%,1/10W,TP,1608	1	SA
....4	R856	2007-000539	R-CHIP;200ohm,5%,1/10W,TP,1608	1	SA
....4	R857	2007-000539	R-CHIP;200ohm,5%,1/10W,TP,1608	1	SA
....4	R858	2007-000539	R-CHIP;200ohm,5%,1/10W,TP,1608	1	SA
....4	R402	2007-000593	R-CHIP;22ohm,5%,1/8W,TP,2012	1	SA
....4	R410	2007-000593	R-CHIP;22ohm,5%,1/8W,TP,2012	1	SA
....4	R1318	2007-000659	R-CHIP;27ohm,5%,1/10W,TP,1608	1	SA
....4	R1319	2007-000659	R-CHIP;27ohm,5%,1/10W,TP,1608	1	SA
....4	R109	2007-000701	R-CHIP;3.6Kohm,1%,1/10W,TP,1608	1	SA
....4	R111	2007-000701	R-CHIP;3.6Kohm,1%,1/10W,TP,1608	1	SA
....4	R805	2007-000708	R-CHIP;3.9Kohm,1%,1/10W,TP,1608	1	SA
....4	R833	2007-000708	R-CHIP;3.9Kohm,1%,1/10W,TP,1608	1	SA
....4	R1702	2007-000729	R-CHIP;300ohm,5%,1/10W,TP,1608	1	SA
....4	R1057	2007-000903	R-CHIP;430ohm,1%,1/10W,TP,1608	1	SA
....4	R1430	2007-001010	R-CHIP;51Kohm,5%,1/10W,TP,1608	1	SA
....4	R1431	2007-001010	R-CHIP;51Kohm,5%,1/10W,TP,1608	1	SA
....4	R1203	2007-001014	R-CHIP;51OHM,5%,1/10W,TP,1608	1	SA
....4	R1208	2007-001014	R-CHIP;51OHM,5%,1/10W,TP,1608	1	SA
....4	R1103	2007-001139	R-CHIP;7.5Kohm,1%,1/10W,TP,1608	1	SA
....4	R606	2007-001164	R-CHIP;75ohm,1%,1/10W,TP,1608	1	SA
....4	R607	2007-001164	R-CHIP;75ohm,1%,1/10W,TP,1608	1	SA
....4	R608	2007-001164	R-CHIP;75ohm,1%,1/10W,TP,1608	1	SA
....4	R611	2007-001164	R-CHIP;75ohm,1%,1/10W,TP,1608	1	SA
....4	R617	2007-001164	R-CHIP;75ohm,1%,1/10W,TP,1608	1	SA
....4	R618	2007-001164	R-CHIP;75ohm,1%,1/10W,TP,1608	1	SA
....4	R1411	2007-001167	R-CHIP;75ohm,5%,1/10W,TP,1608	1	SA
....4	R811	2007-001167	R-CHIP;75ohm,5%,1/10W,TP,1608	1	SA
....4	R812	2007-001167	R-CHIP;75ohm,5%,1/10W,TP,1608	1	SA
....4	R813	2007-001167	R-CHIP;75ohm,5%,1/10W,TP,1608	1	SA
....4	R819	2007-001167	R-CHIP;75ohm,5%,1/10W,TP,1608	1	SA
....4	R820	2007-001167	R-CHIP;75ohm,5%,1/10W,TP,1608	1	SA

Level	Loc. No.	Code No.	Description & Specification	Q'ty	SA/SNA
....4	R104	2007-002768	R-CHIP;6.2Kohm,1%,1/10W,TP,1608	1	SA
....4	R105	2007-002768	R-CHIP;6.2Kohm,1%,1/10W,TP,1608	1	SA
....4	R401	2007-008720	R-CHIP;4.7ohm,1%,1/4W,TP,3216	1	SA
....4	R403	2007-008720	R-CHIP;4.7ohm,1%,1/4W,TP,3216	1	SA
....4	R409	2007-008720	R-CHIP;4.7ohm,1%,1/4W,TP,3216	1	SA
....4	R413	2007-008720	R-CHIP;4.7ohm,1%,1/4W,TP,3216	1	SA
....4	IC1203	2011-000002	R-NET;22ohm,5%,1/16W,L,CHIP,8P,TP,3216	1	SA
....4	RA1201	2011-000002	R-NET;22ohm,5%,1/16W,L,CHIP,8P,TP,3216	1	SA
....4	RA1202	2011-000002	R-NET;22ohm,5%,1/16W,L,CHIP,8P,TP,3216	1	SA
....4	RA1203	2011-000002	R-NET;22ohm,5%,1/16W,L,CHIP,8P,TP,3216	1	SA
....4	RA1204	2011-000002	R-NET;22ohm,5%,1/16W,L,CHIP,8P,TP,3216	1	SA
....4	RA1205	2011-000002	R-NET;22ohm,5%,1/16W,L,CHIP,8P,TP,3216	1	SA
....4	RA1206	2011-000002	R-NET;22ohm,5%,1/16W,L,CHIP,8P,TP,3216	1	SA
....4	RA1207	2011-000002	R-NET;22ohm,5%,1/16W,L,CHIP,8P,TP,3216	1	SA
....4	RA1401	2011-000002	R-NET;22ohm,5%,1/16W,L,CHIP,8P,TP,3216	1	SA
....4	RA1402	2011-000002	R-NET;22ohm,5%,1/16W,L,CHIP,8P,TP,3216	1	SA
....4	RA1403	2011-000002	R-NET;22ohm,5%,1/16W,L,CHIP,8P,TP,3216	1	SA
....4	RA1404	2011-000002	R-NET;22ohm,5%,1/16W,L,CHIP,8P,TP,3216	1	SA
....4	RA501	2011-000475	R-NET;33ohm,5%,1/16W,L,CHIP,8P,TP,3216	1	SA
....4	RA502	2011-000475	R-NET;33ohm,5%,1/16W,L,CHIP,8P,TP,3216	1	SA
....4	RA503	2011-000475	R-NET;33ohm,5%,1/16W,L,CHIP,8P,TP,3216	1	SA
....4	RA301	2011-000651	R-NET;10ohm,5%,1/16W,L,CHIP,8P,TP,3216	1	SA
....4	RA1501	2011-000881	R-NET;33ohm,5%,1/16W,L,CHIP,8P,TP,3.2x1.	1	SA
....4	RA1502	2011-000881	R-NET;33ohm,5%,1/16W,L,CHIP,8P,TP,3.2x1.	1	SA
....4	RA1503	2011-000881	R-NET;33ohm,5%,1/16W,L,CHIP,8P,TP,3.2x1.	1	SA
....4	RA1504	2011-000881	R-NET;33ohm,5%,1/16W,L,CHIP,8P,TP,3.2x1.	1	SA
....4	RA1505	2011-000881	R-NET;33ohm,5%,1/16W,L,CHIP,8P,TP,3.2x1.	1	SA
....4	RA1506	2011-000881	R-NET;33ohm,5%,1/16W,L,CHIP,8P,TP,3.2x1.	1	SA
....4	RA1507	2011-000881	R-NET;33ohm,5%,1/16W,L,CHIP,8P,TP,3.2x1.	1	SA
....4	RA1508	2011-000881	R-NET;33ohm,5%,1/16W,L,CHIP,8P,TP,3.2x1.	1	SA
....4	RA1509	2011-000881	R-NET;33ohm,5%,1/16W,L,CHIP,8P,TP,3.2x1.	1	SA
....4	RA1510	2011-000881	R-NET;33ohm,5%,1/16W,L,CHIP,8P,TP,3.2x1.	1	SA
....4	RA1511	2011-000881	R-NET;33ohm,5%,1/16W,L,CHIP,8P,TP,3.2x1.	1	SA
....4	RA1601	2011-000881	R-NET;33ohm,5%,1/16W,L,CHIP,8P,TP,3.2x1.	1	SA
....4	RA1602	2011-000881	R-NET;33ohm,5%,1/16W,L,CHIP,8P,TP,3.2x1.	1	SA
....4	RA1603	2011-000881	R-NET;33ohm,5%,1/16W,L,CHIP,8P,TP,3.2x1.	1	SA
....4	RA1604	2011-000881	R-NET;33ohm,5%,1/16W,L,CHIP,8P,TP,3.2x1.	1	SA
....4	RA1605	2011-000881	R-NET;33ohm,5%,1/16W,L,CHIP,8P,TP,3.2x1.	1	SA
....4	RA1606	2011-000881	R-NET;33ohm,5%,1/16W,L,CHIP,8P,TP,3.2x1.	1	SA
....4	RA1607	2011-000881	R-NET;33ohm,5%,1/16W,L,CHIP,8P,TP,3.2x1.	1	SA
....4	RA1608	2011-000881	R-NET;33ohm,5%,1/16W,L,CHIP,8P,TP,3.2x1.	1	SA
....4	RA1609	2011-000881	R-NET;33ohm,5%,1/16W,L,CHIP,8P,TP,3.2x1.	1	SA
....4	RA1610	2011-000881	R-NET;33ohm,5%,1/16W,L,CHIP,8P,TP,3.2x1.	1	SA
....4	RA201	2011-001093	R-NET;100OHM,5%,1/16W,L,CHIP,8P,TP,3216	1	SA
....4	RA202	2011-001093	R-NET;100OHM,5%,1/16W,L,CHIP,8P,TP,3216	1	SA
....4	C428	2203-000125	C-CER,CHIP;1.2nF,10%,50V,X7R,TP,1608,-	1	SA
....4	C1307	2203-000140	C-CER,CHIP;1.5nF,10%,50V,X7R,1608	1	SA
....4	C315	2203-000140	C-CER,CHIP;1.5nF,10%,50V,X7R,1608	1	SA
....4	C327	2203-000140	C-CER,CHIP;1.5nF,10%,50V,X7R,1608	1	SA
....4	C103	2203-000189	C-CER,CHIP;100nF,+80-20%,25V,Y5V,1608	1	SA
....4	C105	2203-000189	C-CER,CHIP;100nF,+80-20%,25V,Y5V,1608	1	SA
....4	C107	2203-000189	C-CER,CHIP;100nF,+80-20%,25V,Y5V,1608	1	SA
....4	C1107	2203-000189	C-CER,CHIP;100nF,+80-20%,25V,Y5V,1608	1	SA
....4	C1108	2203-000189	C-CER,CHIP;100nF,+80-20%,25V,Y5V,1608	1	SA
....4	C1111	2203-000189	C-CER,CHIP;100nF,+80-20%,25V,Y5V,1608	1	SA
....4	C1112	2203-000189	C-CER,CHIP;100nF,+80-20%,25V,Y5V,1608	1	SA
....4	C1113	2203-000189	C-CER,CHIP;100nF,+80-20%,25V,Y5V,1608	1	SA
....4	C1116	2203-000189	C-CER,CHIP;100nF,+80-20%,25V,Y5V,1608	1	SA
....4	C1117	2203-000189	C-CER,CHIP;100nF,+80-20%,25V,Y5V,1608	1	SA
....4	C1120	2203-000189	C-CER,CHIP;100nF,+80-20%,25V,Y5V,1608	1	SA
....4	C1121	2203-000189	C-CER,CHIP;100nF,+80-20%,25V,Y5V,1608	1	SA
....4	C1125	2203-000189	C-CER,CHIP;100nF,+80-20%,25V,Y5V,1608	1	SA
....4	C1126	2203-000189	C-CER,CHIP;100nF,+80-20%,25V,Y5V,1608	1	SA
....4	C1127	2203-000189	C-CER,CHIP;100nF,+80-20%,25V,Y5V,1608	1	SA
....4	C1128	2203-000189	C-CER,CHIP;100nF,+80-20%,25V,Y5V,1608	1	SA
....4	C1129	2203-000189	C-CER,CHIP;100nF,+80-20%,25V,Y5V,1608	1	SA
....4	C1133	2203-000189	C-CER,CHIP;100nF,+80-20%,25V,Y5V,1608	1	SA
....4	C1134	2203-000189	C-CER,CHIP;100nF,+80-20%,25V,Y5V,1608	1	SA
....4	C1135	2203-000189	C-CER,CHIP;100nF,+80-20%,25V,Y5V,1608	1	SA
....4	C1136	2203-000189	C-CER,CHIP;100nF,+80-20%,25V,Y5V,1608	1	SA
....4	C1137	2203-000189	C-CER,CHIP;100nF,+80-20%,25V,Y5V,1608	1	SA
....4	C1140	2203-000189	C-CER,CHIP;100nF,+80-20%,25V,Y5V,1608	1	SA

Level	Loc. No.	Code No.	Description & Specification	Q'ty	SA/SNA
....4	C1141	2203-000189	C-CER,CHIP;100nF,+80-20%,25V,Y5V,1608	1	SA
....4	C1144	2203-000189	C-CER,CHIP;100nF,+80-20%,25V,Y5V,1608	1	SA
....4	C1145	2203-000189	C-CER,CHIP;100nF,+80-20%,25V,Y5V,1608	1	SA
....4	C1147	2203-000189	C-CER,CHIP;100nF,+80-20%,25V,Y5V,1608	1	SA
....4	C1148	2203-000189	C-CER,CHIP;100nF,+80-20%,25V,Y5V,1608	1	SA
....4	C1149	2203-000189	C-CER,CHIP;100nF,+80-20%,25V,Y5V,1608	1	SA
....4	C1150	2203-000189	C-CER,CHIP;100nF,+80-20%,25V,Y5V,1608	1	SA
....4	C1156	2203-000189	C-CER,CHIP;100nF,+80-20%,25V,Y5V,1608	1	SA
....4	C1157	2203-000189	C-CER,CHIP;100nF,+80-20%,25V,Y5V,1608	1	SA
....4	C1158	2203-000189	C-CER,CHIP;100nF,+80-20%,25V,Y5V,1608	1	SA
....4	C1159	2203-000189	C-CER,CHIP;100nF,+80-20%,25V,Y5V,1608	1	SA
....4	C116	2203-000189	C-CER,CHIP;100nF,+80-20%,25V,Y5V,1608	1	SA
....4	C1160	2203-000189	C-CER,CHIP;100nF,+80-20%,25V,Y5V,1608	1	SA
....4	C1161	2203-000189	C-CER,CHIP;100nF,+80-20%,25V,Y5V,1608	1	SA
....4	C1162	2203-000189	C-CER,CHIP;100nF,+80-20%,25V,Y5V,1608	1	SA
....4	C1163	2203-000189	C-CER,CHIP;100nF,+80-20%,25V,Y5V,1608	1	SA
....4	C1164	2203-000189	C-CER,CHIP;100nF,+80-20%,25V,Y5V,1608	1	SA
....4	C1165	2203-000189	C-CER,CHIP;100nF,+80-20%,25V,Y5V,1608	1	SA
....4	C1166	2203-000189	C-CER,CHIP;100nF,+80-20%,25V,Y5V,1608	1	SA
....4	C1167	2203-000189	C-CER,CHIP;100nF,+80-20%,25V,Y5V,1608	1	SA
....4	C117	2203-000189	C-CER,CHIP;100nF,+80-20%,25V,Y5V,1608	1	SA
....4	C124	2203-000189	C-CER,CHIP;100nF,+80-20%,25V,Y5V,1608	1	SA
....4	C1302	2203-000189	C-CER,CHIP;100nF,+80-20%,25V,Y5V,1608	1	SA
....4	C1401	2203-000189	C-CER,CHIP;100nF,+80-20%,25V,Y5V,1608	1	SA
....4	C1403	2203-000189	C-CER,CHIP;100nF,+80-20%,25V,Y5V,1608	1	SA
....4	C153	2203-000189	C-CER,CHIP;100nF,+80-20%,25V,Y5V,1608	1	SA
....4	C155	2203-000189	C-CER,CHIP;100nF,+80-20%,25V,Y5V,1608	1	SA
....4	C157	2203-000189	C-CER,CHIP;100nF,+80-20%,25V,Y5V,1608	1	SA
....4	C1705	2203-000189	C-CER,CHIP;100nF,+80-20%,25V,Y5V,1608	1	SA
....4	C1706	2203-000189	C-CER,CHIP;100nF,+80-20%,25V,Y5V,1608	1	SA
....4	C1707	2203-000189	C-CER,CHIP;100nF,+80-20%,25V,Y5V,1608	1	SA
....4	C1708	2203-000189	C-CER,CHIP;100nF,+80-20%,25V,Y5V,1608	1	SA
....4	C1709	2203-000189	C-CER,CHIP;100nF,+80-20%,25V,Y5V,1608	1	SA
....4	C1713	2203-000189	C-CER,CHIP;100nF,+80-20%,25V,Y5V,1608	1	SA
....4	C1714	2203-000189	C-CER,CHIP;100nF,+80-20%,25V,Y5V,1608	1	SA
....4	C1715	2203-000189	C-CER,CHIP;100nF,+80-20%,25V,Y5V,1608	1	SA
....4	C1716	2203-000189	C-CER,CHIP;100nF,+80-20%,25V,Y5V,1608	1	SA
....4	C1717	2203-000189	C-CER,CHIP;100nF,+80-20%,25V,Y5V,1608	1	SA
....4	C1718	2203-000189	C-CER,CHIP;100nF,+80-20%,25V,Y5V,1608	1	SA
....4	C1719	2203-000189	C-CER,CHIP;100nF,+80-20%,25V,Y5V,1608	1	SA
....4	C1723	2203-000189	C-CER,CHIP;100nF,+80-20%,25V,Y5V,1608	1	SA
....4	C1724	2203-000189	C-CER,CHIP;100nF,+80-20%,25V,Y5V,1608	1	SA
....4	C1725	2203-000189	C-CER,CHIP;100nF,+80-20%,25V,Y5V,1608	1	SA
....4	C1726	2203-000189	C-CER,CHIP;100nF,+80-20%,25V,Y5V,1608	1	SA
....4	C1727	2203-000189	C-CER,CHIP;100nF,+80-20%,25V,Y5V,1608	1	SA
....4	C1728	2203-000189	C-CER,CHIP;100nF,+80-20%,25V,Y5V,1608	1	SA
....4	C1729	2203-000189	C-CER,CHIP;100nF,+80-20%,25V,Y5V,1608	1	SA
....4	C1733	2203-000189	C-CER,CHIP;100nF,+80-20%,25V,Y5V,1608	1	SA
....4	C1734	2203-000189	C-CER,CHIP;100nF,+80-20%,25V,Y5V,1608	1	SA
....4	C1744	2203-000189	C-CER,CHIP;100nF,+80-20%,25V,Y5V,1608	1	SA
....4	C1747	2203-000189	C-CER,CHIP;100nF,+80-20%,25V,Y5V,1608	1	SA
....4	C1756	2203-000189	C-CER,CHIP;100nF,+80-20%,25V,Y5V,1608	1	SA
....4	C1757	2203-000189	C-CER,CHIP;100nF,+80-20%,25V,Y5V,1608	1	SA
....4	C1758	2203-000189	C-CER,CHIP;100nF,+80-20%,25V,Y5V,1608	1	SA
....4	C1759	2203-000189	C-CER,CHIP;100nF,+80-20%,25V,Y5V,1608	1	SA
....4	C1760	2203-000189	C-CER,CHIP;100nF,+80-20%,25V,Y5V,1608	1	SA
....4	C1761	2203-000189	C-CER,CHIP;100nF,+80-20%,25V,Y5V,1608	1	SA
....4	C1762	2203-000189	C-CER,CHIP;100nF,+80-20%,25V,Y5V,1608	1	SA
....4	C210	2203-000189	C-CER,CHIP;100nF,+80-20%,25V,Y5V,1608	1	SA
....4	C211	2203-000189	C-CER,CHIP;100nF,+80-20%,25V,Y5V,1608	1	SA
....4	C313	2203-000189	C-CER,CHIP;100nF,+80-20%,25V,Y5V,1608	1	SA
....4	C322	2203-000189	C-CER,CHIP;100nF,+80-20%,25V,Y5V,1608	1	SA
....4	C323	2203-000189	C-CER,CHIP;100nF,+80-20%,25V,Y5V,1608	1	SA
....4	C324	2203-000189	C-CER,CHIP;100nF,+80-20%,25V,Y5V,1608	1	SA
....4	C325	2203-000189	C-CER,CHIP;100nF,+80-20%,25V,Y5V,1608	1	SA
....4	C342	2203-000189	C-CER,CHIP;100nF,+80-20%,25V,Y5V,1608	1	SA
....4	C344	2203-000189	C-CER,CHIP;100nF,+80-20%,25V,Y5V,1608	1	SA
....4	C345	2203-000189	C-CER,CHIP;100nF,+80-20%,25V,Y5V,1608	1	SA
....4	C352	2203-000189	C-CER,CHIP;100nF,+80-20%,25V,Y5V,1608	1	SA
....4	C355	2203-000189	C-CER,CHIP;100nF,+80-20%,25V,Y5V,1608	1	SA
....4	C403	2203-000189	C-CER,CHIP;100nF,+80-20%,25V,Y5V,1608	1	SA
....4	C407	2203-000189	C-CER,CHIP;100nF,+80-20%,25V,Y5V,1608	1	SA

Level	Loc. No.	Code No.	Description & Specification	Q'ty	SA/SNA
....4	C412	2203-000189	C-CER,CHIP;100nF,+80-20%,25V,Y5V,1608	1	SA
....4	C429	2203-000189	C-CER,CHIP;100nF,+80-20%,25V,Y5V,1608	1	SA
....4	C501	2203-000189	C-CER,CHIP;100nF,+80-20%,25V,Y5V,1608	1	SA
....4	C502	2203-000189	C-CER,CHIP;100nF,+80-20%,25V,Y5V,1608	1	SA
....4	C504	2203-000189	C-CER,CHIP;100nF,+80-20%,25V,Y5V,1608	1	SA
....4	C508	2203-000189	C-CER,CHIP;100nF,+80-20%,25V,Y5V,1608	1	SA
....4	C517	2203-000189	C-CER,CHIP;100nF,+80-20%,25V,Y5V,1608	1	SA
....4	C521	2203-000189	C-CER,CHIP;100nF,+80-20%,25V,Y5V,1608	1	SA
....4	C528	2203-000189	C-CER,CHIP;100nF,+80-20%,25V,Y5V,1608	1	SA
....4	C533	2203-000189	C-CER,CHIP;100nF,+80-20%,25V,Y5V,1608	1	SA
....4	C539	2203-000189	C-CER,CHIP;100nF,+80-20%,25V,Y5V,1608	1	SA
....4	C703	2203-000189	C-CER,CHIP;100nF,+80-20%,25V,Y5V,1608	1	SA
....4	C704	2203-000189	C-CER,CHIP;100nF,+80-20%,25V,Y5V,1608	1	SA
....4	C705	2203-000189	C-CER,CHIP;100nF,+80-20%,25V,Y5V,1608	1	SA
....4	C706	2203-000189	C-CER,CHIP;100nF,+80-20%,25V,Y5V,1608	1	SA
....4	C709	2203-000189	C-CER,CHIP;100nF,+80-20%,25V,Y5V,1608	1	SA
....4	C802	2203-000189	C-CER,CHIP;100nF,+80-20%,25V,Y5V,1608	1	SA
....4	C804	2203-000189	C-CER,CHIP;100nF,+80-20%,25V,Y5V,1608	1	SA
....4	C813	2203-000189	C-CER,CHIP;100nF,+80-20%,25V,Y5V,1608	1	SA
....4	C912	2203-000189	C-CER,CHIP;100nF,+80-20%,25V,Y5V,1608	1	SA
....4	C913	2203-000189	C-CER,CHIP;100nF,+80-20%,25V,Y5V,1608	1	SA
....4	C914	2203-000189	C-CER,CHIP;100nF,+80-20%,25V,Y5V,1608	1	SA
....4	C915	2203-000189	C-CER,CHIP;100nF,+80-20%,25V,Y5V,1608	1	SA
....4	C916	2203-000189	C-CER,CHIP;100nF,+80-20%,25V,Y5V,1608	1	SA
....4	C917	2203-000189	C-CER,CHIP;100nF,+80-20%,25V,Y5V,1608	1	SA
....4	C918	2203-000189	C-CER,CHIP;100nF,+80-20%,25V,Y5V,1608	1	SA
....4	C919	2203-000189	C-CER,CHIP;100nF,+80-20%,25V,Y5V,1608	1	SA
....4	C920	2203-000189	C-CER,CHIP;100nF,+80-20%,25V,Y5V,1608	1	SA
....4	C921	2203-000189	C-CER,CHIP;100nF,+80-20%,25V,Y5V,1608	1	SA
....4	C922	2203-000189	C-CER,CHIP;100nF,+80-20%,25V,Y5V,1608	1	SA
....4	C923	2203-000189	C-CER,CHIP;100nF,+80-20%,25V,Y5V,1608	1	SA
....4	C924	2203-000189	C-CER,CHIP;100nF,+80-20%,25V,Y5V,1608	1	SA
....4	C925	2203-000189	C-CER,CHIP;100nF,+80-20%,25V,Y5V,1608	1	SA
....4	C926	2203-000189	C-CER,CHIP;100nF,+80-20%,25V,Y5V,1608	1	SA
....4	C927	2203-000189	C-CER,CHIP;100nF,+80-20%,25V,Y5V,1608	1	SA
....4	C928	2203-000189	C-CER,CHIP;100nF,+80-20%,25V,Y5V,1608	1	SA
....4	C929	2203-000189	C-CER,CHIP;100nF,+80-20%,25V,Y5V,1608	1	SA
....4	C930	2203-000189	C-CER,CHIP;100nF,+80-20%,25V,Y5V,1608	1	SA
....4	C931	2203-000189	C-CER,CHIP;100nF,+80-20%,25V,Y5V,1608	1	SA
....4	C932	2203-000189	C-CER,CHIP;100nF,+80-20%,25V,Y5V,1608	1	SA
....4	C933	2203-000189	C-CER,CHIP;100nF,+80-20%,25V,Y5V,1608	1	SA
....4	C937	2203-000189	C-CER,CHIP;100nF,+80-20%,25V,Y5V,1608	1	SA
....4	C433	2203-000236	C-CER,CHIP;0.1nF,5%,50V,C0G,1608	1	SA
....4	C604	2203-000236	C-CER,CHIP;0.1nF,5%,50V,C0G,1608	1	SA
....4	C609	2203-000236	C-CER,CHIP;0.1nF,5%,50V,C0G,1608	1	SA
....4	C806	2203-000236	C-CER,CHIP;0.1nF,5%,50V,C0G,1608	1	SA
....4	C807	2203-000236	C-CER,CHIP;0.1nF,5%,50V,C0G,1608	1	SA
....4	C818	2203-000236	C-CER,CHIP;0.1nF,5%,50V,C0G,1608	1	SA
....4	C1006	2203-000257	C-CER,CHIP;10nF,10%,50V,X7R,1608	1	SA
....4	C101	2203-000257	C-CER,CHIP;10nF,10%,50V,X7R,1608	1	SA
....4	C1015	2203-000257	C-CER,CHIP;10nF,10%,50V,X7R,1608	1	SA
....4	C1019	2203-000257	C-CER,CHIP;10nF,10%,50V,X7R,1608	1	SA
....4	C102	2203-000257	C-CER,CHIP;10nF,10%,50V,X7R,1608	1	SA
....4	C1022	2203-000257	C-CER,CHIP;10nF,10%,50V,X7R,1608	1	SA
....4	C1027	2203-000257	C-CER,CHIP;10nF,10%,50V,X7R,1608	1	SA
....4	C104	2203-000257	C-CER,CHIP;10nF,10%,50V,X7R,1608	1	SA
....4	C114	2203-000257	C-CER,CHIP;10nF,10%,50V,X7R,1608	1	SA
....4	C118	2203-000257	C-CER,CHIP;10nF,10%,50V,X7R,1608	1	SA
....4	C1208	2203-000257	C-CER,CHIP;10nF,10%,50V,X7R,1608	1	SA
....4	C1209	2203-000257	C-CER,CHIP;10nF,10%,50V,X7R,1608	1	SA
....4	C1210	2203-000257	C-CER,CHIP;10nF,10%,50V,X7R,1608	1	SA
....4	C1211	2203-000257	C-CER,CHIP;10nF,10%,50V,X7R,1608	1	SA
....4	C1212	2203-000257	C-CER,CHIP;10nF,10%,50V,X7R,1608	1	SA
....4	C1218	2203-000257	C-CER,CHIP;10nF,10%,50V,X7R,1608	1	SA
....4	C1219	2203-000257	C-CER,CHIP;10nF,10%,50V,X7R,1608	1	SA
....4	C1222	2203-000257	C-CER,CHIP;10nF,10%,50V,X7R,1608	1	SA
....4	C127	2203-000257	C-CER,CHIP;10nF,10%,50V,X7R,1608	1	SA
....4	C1314	2203-000257	C-CER,CHIP;10nF,10%,50V,X7R,1608	1	SA
....4	C132	2203-000257	C-CER,CHIP;10nF,10%,50V,X7R,1608	1	SA
....4	C149	2203-000257	C-CER,CHIP;10nF,10%,50V,X7R,1608	1	SA
....4	C1603	2203-000257	C-CER,CHIP;10nF,10%,50V,X7R,1608	1	SA
....4	C1605	2203-000257	C-CER,CHIP;10nF,10%,50V,X7R,1608	1	SA

Level	Loc. No.	Code No.	Description & Specification	Q'ty	SA/SNA
....4	C1710	2203-000257	C-CER,CHIP;10nF,10%,50V,X7R,1608	1	SA
....4	C1711	2203-000257	C-CER,CHIP;10nF,10%,50V,X7R,1608	1	SA
....4	C1712	2203-000257	C-CER,CHIP;10nF,10%,50V,X7R,1608	1	SA
....4	C1720	2203-000257	C-CER,CHIP;10nF,10%,50V,X7R,1608	1	SA
....4	C1721	2203-000257	C-CER,CHIP;10nF,10%,50V,X7R,1608	1	SA
....4	C1722	2203-000257	C-CER,CHIP;10nF,10%,50V,X7R,1608	1	SA
....4	C1730	2203-000257	C-CER,CHIP;10nF,10%,50V,X7R,1608	1	SA
....4	C1731	2203-000257	C-CER,CHIP;10nF,10%,50V,X7R,1608	1	SA
....4	C1732	2203-000257	C-CER,CHIP;10nF,10%,50V,X7R,1608	1	SA
....4	C1763	2203-000257	C-CER,CHIP;10nF,10%,50V,X7R,1608	1	SA
....4	C1764	2203-000257	C-CER,CHIP;10nF,10%,50V,X7R,1608	1	SA
....4	C1765	2203-000257	C-CER,CHIP;10nF,10%,50V,X7R,1608	1	SA
....4	C213	2203-000257	C-CER,CHIP;10nF,10%,50V,X7R,1608	1	SA
....4	C318	2203-000257	C-CER,CHIP;10nF,10%,50V,X7R,1608	1	SA
....4	C511	2203-000257	C-CER,CHIP;10nF,10%,50V,X7R,1608	1	SA
....4	C520	2203-000257	C-CER,CHIP;10nF,10%,50V,X7R,1608	1	SA
....4	C532	2203-000257	C-CER,CHIP;10nF,10%,50V,X7R,1608	1	SA
....4	C707	2203-000257	C-CER,CHIP;10nF,10%,50V,X7R,1608	1	SA
....4	C713	2203-000257	C-CER,CHIP;10nF,10%,50V,X7R,1608	1	SA
....4	C714	2203-000257	C-CER,CHIP;10nF,10%,50V,X7R,1608	1	SA
....4	C716	2203-000257	C-CER,CHIP;10nF,10%,50V,X7R,1608	1	SA
....4	C906	2203-000257	C-CER,CHIP;10nF,10%,50V,X7R,1608	1	SA
....4	C907	2203-000257	C-CER,CHIP;10nF,10%,50V,X7R,1608	1	SA
....4	C908	2203-000257	C-CER,CHIP;10nF,10%,50V,X7R,1608	1	SA
....4	C909	2203-000257	C-CER,CHIP;10nF,10%,50V,X7R,1608	1	SA
....4	C910	2203-000257	C-CER,CHIP;10nF,10%,50V,X7R,1608	1	SA
....4	C319	2203-000357	C-CER,CHIP;0.15nF,5%,50V,C0G,1608	1	SA
....4	C145	2203-000405	C-CER,CHIP;0.18nF,5%,50V,C0G,1608	1	SA
....4	C146	2203-000405	C-CER,CHIP;0.18nF,5%,50V,C0G,1608	1	SA
....4	C901	2203-000426	C-CER,CHIP;0.018nF,5%,50V,C0G,1608	1	SA
....4	C905	2203-000426	C-CER,CHIP;0.018nF,5%,50V,C0G,1608	1	SA
....4	C1003	2203-000440	C-CER,CHIP;1nF,10%,50V,X7R,1608	1	SA
....4	C1007	2203-000440	C-CER,CHIP;1nF,10%,50V,X7R,1608	1	SA
....4	C1016	2203-000440	C-CER,CHIP;1nF,10%,50V,X7R,1608	1	SA
....4	C1020	2203-000440	C-CER,CHIP;1nF,10%,50V,X7R,1608	1	SA
....4	C1021	2203-000440	C-CER,CHIP;1nF,10%,50V,X7R,1608	1	SA
....4	C1304	2203-000440	C-CER,CHIP;1nF,10%,50V,X7R,1608	1	SA
....4	C1308	2203-000440	C-CER,CHIP;1nF,10%,50V,X7R,1608	1	SA
....4	C206	2203-000440	C-CER,CHIP;1nF,10%,50V,X7R,1608	1	SA
....4	C404	2203-000440	C-CER,CHIP;1nF,10%,50V,X7R,1608	1	SA
....4	C405	2203-000440	C-CER,CHIP;1nF,10%,50V,X7R,1608	1	SA
....4	C431	2203-000440	C-CER,CHIP;1nF,10%,50V,X7R,1608	1	SA
....4	C432	2203-000440	C-CER,CHIP;1nF,10%,50V,X7R,1608	1	SA
....4	C540	2203-000440	C-CER,CHIP;1nF,10%,50V,X7R,1608	1	SA
....4	C535	2203-000491	C-CER,CHIP;2.2nF,10%,50V,X7R,1608	1	SA
....4	C1123	2203-000531	C-CER,CHIP;2.7nF,10%,50V,X7R,1608	1	SA
....4	C1131	2203-000531	C-CER,CHIP;2.7nF,10%,50V,X7R,1608	1	SA
....4	C207	2203-000626	C-CER,CHIP;0.022nF,5%,50V,C0G,1608	1	SA
....4	C208	2203-000626	C-CER,CHIP;0.022nF,5%,50V,C0G,1608	1	SA
....4	C1303	2203-000681	C-CER,CHIP;0.027nF,5%,50V,C0G,1608	1	SA
....4	C1305	2203-000681	C-CER,CHIP;0.027nF,5%,50V,C0G,1608	1	SA
....4	C331	2203-000681	C-CER,CHIP;0.027nF,5%,50V,C0G,1608	1	SA
....4	C340	2203-000681	C-CER,CHIP;0.027nF,5%,50V,C0G,1608	1	SA
....4	C147	2203-000715	C-CER,CHIP;3.3nF,10%,50V,X7R,1608	1	SA
....4	C148	2203-000715	C-CER,CHIP;3.3nF,10%,50V,X7R,1608	1	SA
....4	C413	2203-000783	C-CER,CHIP;0.33nF,5%,50V,C0G,1608	1	SA
....4	C422	2203-000783	C-CER,CHIP;0.33nF,5%,50V,C0G,1608	1	SA
....4	C605	2203-000783	C-CER,CHIP;0.33nF,5%,50V,C0G,1608	1	SA
....4	C606	2203-000783	C-CER,CHIP;0.33nF,5%,50V,C0G,1608	1	SA
....4	C607	2203-000783	C-CER,CHIP;0.33nF,5%,50V,C0G,1608	1	SA
....4	C608	2203-000783	C-CER,CHIP;0.33nF,5%,50V,C0G,1608	1	SA
....4	C610	2203-000783	C-CER,CHIP;0.33nF,5%,50V,C0G,1608	1	SA
....4	C613	2203-000783	C-CER,CHIP;0.33nF,5%,50V,C0G,1608	1	SA
....4	C614	2203-000783	C-CER,CHIP;0.33nF,5%,50V,C0G,1608	1	SA
....4	C810	2203-000783	C-CER,CHIP;0.33nF,5%,50V,C0G,1608	1	SA
....4	C811	2203-000783	C-CER,CHIP;0.33nF,5%,50V,C0G,1608	1	SA
....4	C823	2203-000783	C-CER,CHIP;0.33nF,5%,50V,C0G,1608	1	SA
....4	C824	2203-000783	C-CER,CHIP;0.33nF,5%,50V,C0G,1608	1	SA
....4	C353	2203-000798	C-CER,CHIP;33nF,10%,16V,X7R,TP,1608,-	1	SA
....4	C354	2203-000798	C-CER,CHIP;33nF,10%,16V,X7R,TP,1608,-	1	SA
....4	C601	2203-000815	C-CER,CHIP;0.033nF,5%,50V,C0G,1608	1	SA
....4	C602	2203-000815	C-CER,CHIP;0.033nF,5%,50V,C0G,1608	1	SA

Level	Loc. No.	Code No.	Description & Specification	Q'ty	SA/SNA
....4	C603	2203-000815	C-CER,CHIP;0.033nF,5%,50V,C0G,1608	1	SA
....4	C808	2203-000815	C-CER,CHIP;0.033nF,5%,50V,C0G,1608	1	SA
....4	C809	2203-000815	C-CER,CHIP;0.033nF,5%,50V,C0G,1608	1	SA
....4	C1310	2203-000838	C-CER,CHIP;0.39NF,5%,50V,C0G,TP,1608	1	SA
....4	C1203	2203-000888	C-CER,CHIP;4.7nF,10%,50V,X7R,1608	1	SA
....4	C1204	2203-000888	C-CER,CHIP;4.7nF,10%,50V,X7R,1608	1	SA
....4	C1205	2203-000888	C-CER,CHIP;4.7nF,10%,50V,X7R,1608	1	SA
....4	C536	2203-000888	C-CER,CHIP;4.7nF,10%,50V,X7R,1608	1	SA
....4	C903	2203-000888	C-CER,CHIP;4.7nF,10%,50V,X7R,1608	1	SA
....4	C904	2203-000888	C-CER,CHIP;4.7nF,10%,50V,X7R,1608	1	SA
....4	C329	2203-000972	C-CER,CHIP;47nF,10%,16V,X7R,1608	1	SA
....4	C527	2203-000972	C-CER,CHIP;47nF,10%,16V,X7R,1608	1	SA
....4	C934	2203-000972	C-CER,CHIP;47nF,10%,16V,X7R,1608	1	SA
....4	C715	2203-000998	C-CER,CHIP;0.047nF,5%,50V,C0G,1608	1	SA
....4	C1405	2203-001397	C-CER,CHIP;2.2nF,5%,50V,NP0,1608	1	SA
....4	C1406	2203-001397	C-CER,CHIP;2.2nF,5%,50V,NP0,1608	1	SA
....4	C320	2203-001402	C-CER,CHIP;220nF,+80-20%,16V,Y5V,TP,1608	1	SA
....4	C1309	2203-001554	C-CER,CHIP;1.8nF,10%,50V,X7R,1608	1	SA
....4	C434	2203-001607	C-CER,CHIP;0.22nF,5%,50V,NP0,1608	1	SA
....4	C531	2203-001607	C-CER,CHIP;0.22nF,5%,50V,NP0,1608	1	SA
....4	C1312	2203-001630	C-CER,CHIP;330nF,+80-20%,16V,Y5V,1608	1	SA
....4	C316	2203-001656	C-CER,CHIP;0.47nF,5%,50V,NP0,1608	1	SA
....4	C326	2203-001656	C-CER,CHIP;0.47nF,5%,50V,NP0,1608	1	SA
....4	C368	2203-001724	C-CER,CHIP;4700nF,+80-20%,16V,Y5V,3216	1	SA
....4	C1005	2203-005005	C-CER,CHIP;100nF,10%,16V,X7R,1608	1	SA
....4	C1009	2203-005005	C-CER,CHIP;100nF,10%,16V,X7R,1608	1	SA
....4	C1010	2203-005005	C-CER,CHIP;100nF,10%,16V,X7R,1608	1	SA
....4	C1014	2203-005005	C-CER,CHIP;100nF,10%,16V,X7R,1608	1	SA
....4	C1018	2203-005005	C-CER,CHIP;100nF,10%,16V,X7R,1608	1	SA
....4	C1023	2203-005005	C-CER,CHIP;100nF,10%,16V,X7R,1608	1	SA
....4	C1026	2203-005005	C-CER,CHIP;100nF,10%,16V,X7R,1608	1	SA
....4	C1030	2203-005005	C-CER,CHIP;100nF,10%,16V,X7R,1608	1	SA
....4	C109	2203-005005	C-CER,CHIP;100nF,10%,16V,X7R,1608	1	SA
....4	C1101	2203-005005	C-CER,CHIP;100nF,10%,16V,X7R,1608	1	SA
....4	C1104	2203-005005	C-CER,CHIP;100nF,10%,16V,X7R,1608	1	SA
....4	C111	2203-005005	C-CER,CHIP;100nF,10%,16V,X7R,1608	1	SA
....4	C1152	2203-005005	C-CER,CHIP;100nF,10%,16V,X7R,1608	1	SA
....4	C1153	2203-005005	C-CER,CHIP;100nF,10%,16V,X7R,1608	1	SA
....4	C1201	2203-005005	C-CER,CHIP;100nF,10%,16V,X7R,1608	1	SA
....4	C1202	2203-005005	C-CER,CHIP;100nF,10%,16V,X7R,1608	1	SA
....4	C1206	2203-005005	C-CER,CHIP;100nF,10%,16V,X7R,1608	1	SA
....4	C1207	2203-005005	C-CER,CHIP;100nF,10%,16V,X7R,1608	1	SA
....4	C121	2203-005005	C-CER,CHIP;100nF,10%,16V,X7R,1608	1	SA
....4	C1216	2203-005005	C-CER,CHIP;100nF,10%,16V,X7R,1608	1	SA
....4	C1217	2203-005005	C-CER,CHIP;100nF,10%,16V,X7R,1608	1	SA
....4	C125	2203-005005	C-CER,CHIP;100nF,10%,16V,X7R,1608	1	SA
....4	C126	2203-005005	C-CER,CHIP;100nF,10%,16V,X7R,1608	1	SA
....4	C129	2203-005005	C-CER,CHIP;100nF,10%,16V,X7R,1608	1	SA
....4	C1306	2203-005005	C-CER,CHIP;100nF,10%,16V,X7R,1608	1	SA
....4	C1313	2203-005005	C-CER,CHIP;100nF,10%,16V,X7R,1608	1	SA
....4	C1315	2203-005005	C-CER,CHIP;100nF,10%,16V,X7R,1608	1	SA
....4	C134	2203-005005	C-CER,CHIP;100nF,10%,16V,X7R,1608	1	SA
....4	C136	2203-005005	C-CER,CHIP;100nF,10%,16V,X7R,1608	1	SA
....4	C141	2203-005005	C-CER,CHIP;100nF,10%,16V,X7R,1608	1	SA
....4	C144	2203-005005	C-CER,CHIP;100nF,10%,16V,X7R,1608	1	SA
....4	C1501	2203-005005	C-CER,CHIP;100nF,10%,16V,X7R,1608	1	SA
....4	C1502	2203-005005	C-CER,CHIP;100nF,10%,16V,X7R,1608	1	SA
....4	C1505	2203-005005	C-CER,CHIP;100nF,10%,16V,X7R,1608	1	SA
....4	C1506	2203-005005	C-CER,CHIP;100nF,10%,16V,X7R,1608	1	SA
....4	C1507	2203-005005	C-CER,CHIP;100nF,10%,16V,X7R,1608	1	SA
....4	C1508	2203-005005	C-CER,CHIP;100nF,10%,16V,X7R,1608	1	SA
....4	C1509	2203-005005	C-CER,CHIP;100nF,10%,16V,X7R,1608	1	SA
....4	C1510	2203-005005	C-CER,CHIP;100nF,10%,16V,X7R,1608	1	SA
....4	C1511	2203-005005	C-CER,CHIP;100nF,10%,16V,X7R,1608	1	SA
....4	C1512	2203-005005	C-CER,CHIP;100nF,10%,16V,X7R,1608	1	SA
....4	C1513	2203-005005	C-CER,CHIP;100nF,10%,16V,X7R,1608	1	SA
....4	C1514	2203-005005	C-CER,CHIP;100nF,10%,16V,X7R,1608	1	SA
....4	C1515	2203-005005	C-CER,CHIP;100nF,10%,16V,X7R,1608	1	SA
....4	C1516	2203-005005	C-CER,CHIP;100nF,10%,16V,X7R,1608	1	SA
....4	C1518	2203-005005	C-CER,CHIP;100nF,10%,16V,X7R,1608	1	SA
....4	C1519	2203-005005	C-CER,CHIP;100nF,10%,16V,X7R,1608	1	SA
....4	C158	2203-005005	C-CER,CHIP;100nF,10%,16V,X7R,1608	1	SA

Level	Loc. No.	Code No.	Description & Specification	Q'ty	SA/SNA
....4	C159	2203-005005	C-CER,CHIP;100nF,10%,16V,X7R,1608	1	SA
....4	C1602	2203-005005	C-CER,CHIP;100nF,10%,16V,X7R,1608	1	SA
....4	C1604	2203-005005	C-CER,CHIP;100nF,10%,16V,X7R,1608	1	SA
....4	C1606	2203-005005	C-CER,CHIP;100nF,10%,16V,X7R,1608	1	SA
....4	C1607	2203-005005	C-CER,CHIP;100nF,10%,16V,X7R,1608	1	SA
....4	C1609	2203-005005	C-CER,CHIP;100nF,10%,16V,X7R,1608	1	SA
....4	C1611	2203-005005	C-CER,CHIP;100nF,10%,16V,X7R,1608	1	SA
....4	C1748	2203-005005	C-CER,CHIP;100nF,10%,16V,X7R,1608	1	SA
....4	C1749	2203-005005	C-CER,CHIP;100nF,10%,16V,X7R,1608	1	SA
....4	C1750	2203-005005	C-CER,CHIP;100nF,10%,16V,X7R,1608	1	SA
....4	C1751	2203-005005	C-CER,CHIP;100nF,10%,16V,X7R,1608	1	SA
....4	C1752	2203-005005	C-CER,CHIP;100nF,10%,16V,X7R,1608	1	SA
....4	C1753	2203-005005	C-CER,CHIP;100nF,10%,16V,X7R,1608	1	SA
....4	C1754	2203-005005	C-CER,CHIP;100nF,10%,16V,X7R,1608	1	SA
....4	C1755	2203-005005	C-CER,CHIP;100nF,10%,16V,X7R,1608	1	SA
....4	C1767	2203-005005	C-CER,CHIP;100nF,10%,16V,X7R,1608	1	SA
....4	C1771	2203-005005	C-CER,CHIP;100nF,10%,16V,X7R,1608	1	SA
....4	C1772	2203-005005	C-CER,CHIP;100nF,10%,16V,X7R,1608	1	SA
....4	C1773	2203-005005	C-CER,CHIP;100nF,10%,16V,X7R,1608	1	SA
....4	C1774	2203-005005	C-CER,CHIP;100nF,10%,16V,X7R,1608	1	SA
....4	C1775	2203-005005	C-CER,CHIP;100nF,10%,16V,X7R,1608	1	SA
....4	C1776	2203-005005	C-CER,CHIP;100nF,10%,16V,X7R,1608	1	SA
....4	C1777	2203-005005	C-CER,CHIP;100nF,10%,16V,X7R,1608	1	SA
....4	C1778	2203-005005	C-CER,CHIP;100nF,10%,16V,X7R,1608	1	SA
....4	C1779	2203-005005	C-CER,CHIP;100nF,10%,16V,X7R,1608	1	SA
....4	C1780	2203-005005	C-CER,CHIP;100nF,10%,16V,X7R,1608	1	SA
....4	C1781	2203-005005	C-CER,CHIP;100nF,10%,16V,X7R,1608	1	SA
....4	C1782	2203-005005	C-CER,CHIP;100nF,10%,16V,X7R,1608	1	SA
....4	C1783	2203-005005	C-CER,CHIP;100nF,10%,16V,X7R,1608	1	SA
....4	C1784	2203-005005	C-CER,CHIP;100nF,10%,16V,X7R,1608	1	SA
....4	C1785	2203-005005	C-CER,CHIP;100nF,10%,16V,X7R,1608	1	SA
....4	C1786	2203-005005	C-CER,CHIP;100nF,10%,16V,X7R,1608	1	SA
....4	C1787	2203-005005	C-CER,CHIP;100nF,10%,16V,X7R,1608	1	SA
....4	C1788	2203-005005	C-CER,CHIP;100nF,10%,16V,X7R,1608	1	SA
....4	C1789	2203-005005	C-CER,CHIP;100nF,10%,16V,X7R,1608	1	SA
....4	C1790	2203-005005	C-CER,CHIP;100nF,10%,16V,X7R,1608	1	SA
....4	C1791	2203-005005	C-CER,CHIP;100nF,10%,16V,X7R,1608	1	SA
....4	C1792	2203-005005	C-CER,CHIP;100nF,10%,16V,X7R,1608	1	SA
....4	C1793	2203-005005	C-CER,CHIP;100nF,10%,16V,X7R,1608	1	SA
....4	C202	2203-005005	C-CER,CHIP;100nF,10%,16V,X7R,1608	1	SA
....4	C205	2203-005005	C-CER,CHIP;100nF,10%,16V,X7R,1608	1	SA
....4	C209	2203-005005	C-CER,CHIP;100nF,10%,16V,X7R,1608	1	SA
....4	C302	2203-005005	C-CER,CHIP;100nF,10%,16V,X7R,1608	1	SA
....4	C332	2203-005005	C-CER,CHIP;100nF,10%,16V,X7R,1608	1	SA
....4	C350	2203-005005	C-CER,CHIP;100nF,10%,16V,X7R,1608	1	SA
....4	C356	2203-005005	C-CER,CHIP;100nF,10%,16V,X7R,1608	1	SA
....4	C357	2203-005005	C-CER,CHIP;100nF,10%,16V,X7R,1608	1	SA
....4	C358	2203-005005	C-CER,CHIP;100nF,10%,16V,X7R,1608	1	SA
....4	C359	2203-005005	C-CER,CHIP;100nF,10%,16V,X7R,1608	1	SA
....4	C361	2203-005005	C-CER,CHIP;100nF,10%,16V,X7R,1608	1	SA
....4	C365	2203-005005	C-CER,CHIP;100nF,10%,16V,X7R,1608	1	SA
....4	C370	2203-005005	C-CER,CHIP;100nF,10%,16V,X7R,1608	1	SA
....4	C371	2203-005005	C-CER,CHIP;100nF,10%,16V,X7R,1608	1	SA
....4	C372	2203-005005	C-CER,CHIP;100nF,10%,16V,X7R,1608	1	SA
....4	C373	2203-005005	C-CER,CHIP;100nF,10%,16V,X7R,1608	1	SA
....4	C421	2203-005005	C-CER,CHIP;100nF,10%,16V,X7R,1608	1	SA
....4	C506	2203-005005	C-CER,CHIP;100nF,10%,16V,X7R,1608	1	SA
....4	C611	2203-005005	C-CER,CHIP;100nF,10%,16V,X7R,1608	1	SA
....4	C701	2203-005005	C-CER,CHIP;100nF,10%,16V,X7R,1608	1	SA
....4	C710	2203-005005	C-CER,CHIP;100nF,10%,16V,X7R,1608	1	SA
....4	C805	2203-005005	C-CER,CHIP;100nF,10%,16V,X7R,1608	1	SA
....4	C814	2203-005005	C-CER,CHIP;100nF,10%,16V,X7R,1608	1	SA
....4	C817	2203-005005	C-CER,CHIP;100nF,10%,16V,X7R,1608	1	SA
....4	C819	2203-005005	C-CER,CHIP;100nF,10%,16V,X7R,1608	1	SA
....4	C821	2203-005005	C-CER,CHIP;100nF,10%,16V,X7R,1608	1	SA
....4	C902	2203-005005	C-CER,CHIP;100nF,10%,16V,X7R,1608	1	SA
....4	C414	2203-005030	C-CER,CHIP;470nF,+80-20%,50V,Y5V,TP,3216	1	SA
....4	C423	2203-005030	C-CER,CHIP;470nF,+80-20%,50V,Y5V,TP,3216	1	SA
....4	C1001	2203-005065	C-CER,CHIP;1000nF,+80-20%,10V,Y5V,1608	1	SA
....4	C1002	2203-005065	C-CER,CHIP;1000nF,+80-20%,10V,Y5V,1608	1	SA
....4	C1004	2203-005065	C-CER,CHIP;1000nF,+80-20%,10V,Y5V,1608	1	SA
....4	C1008	2203-005065	C-CER,CHIP;1000nF,+80-20%,10V,Y5V,1608	1	SA

Level	Loc. No.	Code No.	Description & Specification	Q'ty	SA/SNA
....4	C1013	2203-005065	C-CER,CHIP;1000nF,+80-20%,10V,Y5V,1608	1	SA
....4	C1017	2203-005065	C-CER,CHIP;1000nF,+80-20%,10V,Y5V,1608	1	SA
....4	C1024	2203-005065	C-CER,CHIP;1000nF,+80-20%,10V,Y5V,1608	1	SA
....4	C1025	2203-005065	C-CER,CHIP;1000nF,+80-20%,10V,Y5V,1608	1	SA
....4	C122	2203-005065	C-CER,CHIP;1000nF,+80-20%,10V,Y5V,1608	1	SA
....4	C212	2203-005065	C-CER,CHIP;1000nF,+80-20%,10V,Y5V,1608	1	SA
....4	C425	2203-005065	C-CER,CHIP;1000nF,+80-20%,10V,Y5V,1608	1	SA
....4	C402	2203-005249	C-CER,CHIP;100nF,10%,50V,X7R,1608	1	SA
....4	C406	2203-005249	C-CER,CHIP;100nF,10%,50V,X7R,1608	1	SA
....4	C408	2203-005249	C-CER,CHIP;100nF,10%,50V,X7R,1608	1	SA
....4	C410	2203-005249	C-CER,CHIP;100nF,10%,50V,X7R,1608	1	SA
....4	C415	2203-005249	C-CER,CHIP;100nF,10%,50V,X7R,1608	1	SA
....4	C416	2203-005249	C-CER,CHIP;100nF,10%,50V,X7R,1608	1	SA
....4	C417	2203-005249	C-CER,CHIP;100nF,10%,50V,X7R,1608	1	SA
....4	C418	2203-005249	C-CER,CHIP;100nF,10%,50V,X7R,1608	1	SA
....4	C419	2203-005249	C-CER,CHIP;100nF,10%,50V,X7R,1608	1	SA
....4	C420	2203-005249	C-CER,CHIP;100nF,10%,50V,X7R,1608	1	SA
....4	C424	2203-005249	C-CER,CHIP;100nF,10%,50V,X7R,1608	1	SA
....4	C426	2203-005249	C-CER,CHIP;100nF,10%,50V,X7R,1608	1	SA
....4	C427	2203-005249	C-CER,CHIP;100nF,10%,50V,X7R,1608	1	SA
....4	C430	2203-005249	C-CER,CHIP;100nF,10%,50V,X7R,1608	1	SA
....4	C436	2203-005249	C-CER,CHIP;100nF,10%,50V,X7R,1608	1	SA
....4	C530	2203-005249	C-CER,CHIP;100nF,10%,50V,X7R,1608	1	SA
....4	C362	2203-005533	C-CER,CHIP;1000nF,20%,6.3V,X7R,TP,1608	1	SA
....4	C367	2203-005533	C-CER,CHIP;1000nF,20%,6.3V,X7R,TP,1608	1	SA
....4	C1031	2203-006333	C-CER,CHIP;10000nF,20%,16V,X5R,TP,3216	1	SA
....4	C1032	2203-006333	C-CER,CHIP;10000nF,20%,16V,X5R,TP,3216	1	SA
....4	C1102	2203-006333	C-CER,CHIP;10000nF,20%,16V,X5R,TP,3216	1	SA
....4	C1105	2203-006333	C-CER,CHIP;10000nF,20%,16V,X5R,TP,3216	1	SA
....4	C1109	2203-006333	C-CER,CHIP;10000nF,20%,16V,X5R,TP,3216	1	SA
....4	C1110	2203-006333	C-CER,CHIP;10000nF,20%,16V,X5R,TP,3216	1	SA
....4	C1114	2203-006333	C-CER,CHIP;10000nF,20%,16V,X5R,TP,3216	1	SA
....4	C1115	2203-006333	C-CER,CHIP;10000nF,20%,16V,X5R,TP,3216	1	SA
....4	C1118	2203-006333	C-CER,CHIP;10000nF,20%,16V,X5R,TP,3216	1	SA
....4	C1119	2203-006333	C-CER,CHIP;10000nF,20%,16V,X5R,TP,3216	1	SA
....4	C1122	2203-006333	C-CER,CHIP;10000nF,20%,16V,X5R,TP,3216	1	SA
....4	C1124	2203-006333	C-CER,CHIP;10000nF,20%,16V,X5R,TP,3216	1	SA
....4	C1130	2203-006333	C-CER,CHIP;10000nF,20%,16V,X5R,TP,3216	1	SA
....4	C1132	2203-006333	C-CER,CHIP;10000nF,20%,16V,X5R,TP,3216	1	SA
....4	C1138	2203-006333	C-CER,CHIP;10000nF,20%,16V,X5R,TP,3216	1	SA
....4	C1139	2203-006333	C-CER,CHIP;10000nF,20%,16V,X5R,TP,3216	1	SA
....4	C1142	2203-006333	C-CER,CHIP;10000nF,20%,16V,X5R,TP,3216	1	SA
....4	C1143	2203-006333	C-CER,CHIP;10000nF,20%,16V,X5R,TP,3216	1	SA
....4	C1146	2203-006333	C-CER,CHIP;10000nF,20%,16V,X5R,TP,3216	1	SA
....4	C1316	2203-006333	C-CER,CHIP;10000nF,20%,16V,X5R,TP,3216	1	SA
....4	C1402	2203-006333	C-CER,CHIP;10000nF,20%,16V,X5R,TP,3216	1	SA
....4	C1608	2203-006333	C-CER,CHIP;10000nF,20%,16V,X5R,TP,3216	1	SA
....4	C1610	2203-006333	C-CER,CHIP;10000nF,20%,16V,X5R,TP,3216	1	SA
....4	C1766	2203-006333	C-CER,CHIP;10000nF,20%,16V,X5R,TP,3216	1	SA
....4	C1768	2203-006333	C-CER,CHIP;10000nF,20%,16V,X5R,TP,3216	1	SA
....4	C1769	2203-006333	C-CER,CHIP;10000nF,20%,16V,X5R,TP,3216	1	SA
....4	C1770	2203-006333	C-CER,CHIP;10000nF,20%,16V,X5R,TP,3216	1	SA
....4	C201	2203-006333	C-CER,CHIP;10000nF,20%,16V,X5R,TP,3216	1	SA
....4	C204	2203-006333	C-CER,CHIP;10000nF,20%,16V,X5R,TP,3216	1	SA
....4	C303	2203-006333	C-CER,CHIP;10000nF,20%,16V,X5R,TP,3216	1	SA
....4	C304	2203-006333	C-CER,CHIP;10000nF,20%,16V,X5R,TP,3216	1	SA
....4	C305	2203-006333	C-CER,CHIP;10000nF,20%,16V,X5R,TP,3216	1	SA
....4	C306	2203-006333	C-CER,CHIP;10000nF,20%,16V,X5R,TP,3216	1	SA
....4	C307	2203-006333	C-CER,CHIP;10000nF,20%,16V,X5R,TP,3216	1	SA
....4	C308	2203-006333	C-CER,CHIP;10000nF,20%,16V,X5R,TP,3216	1	SA
....4	C309	2203-006333	C-CER,CHIP;10000nF,20%,16V,X5R,TP,3216	1	SA
....4	C310	2203-006333	C-CER,CHIP;10000nF,20%,16V,X5R,TP,3216	1	SA
....4	C347	2203-006333	C-CER,CHIP;10000nF,20%,16V,X5R,TP,3216	1	SA
....4	C409	2203-006333	C-CER,CHIP;10000nF,20%,16V,X5R,TP,3216	1	SA
....4	C411	2203-006333	C-CER,CHIP;10000nF,20%,16V,X5R,TP,3216	1	SA
....4	C524	2203-006333	C-CER,CHIP;10000nF,20%,16V,X5R,TP,3216	1	SA
....4	C537	2203-006333	C-CER,CHIP;10000nF,20%,16V,X5R,TP,3216	1	SA
....4	C538	2203-006333	C-CER,CHIP;10000nF,20%,16V,X5R,TP,3216	1	SA
....4	C612	2203-006333	C-CER,CHIP;10000nF,20%,16V,X5R,TP,3216	1	SA
....4	C702	2203-006333	C-CER,CHIP;10000nF,20%,16V,X5R,TP,3216	1	SA
....4	C801	2203-006333	C-CER,CHIP;10000nF,20%,16V,X5R,TP,3216	1	SA
....4	C803	2203-006333	C-CER,CHIP;10000nF,20%,16V,X5R,TP,3216	1	SA

Level	Loc. No.	Code No.	Description & Specification	Q'ty	SA/SNA
....4	C812	2203-006333	C-CER,CHIP;10000nF,20%,16V,X5R,TP,3216	1	SA
....4	C815	2203-006333	C-CER,CHIP;10000nF,20%,16V,X5R,TP,3216	1	SA
....4	C816	2203-006333	C-CER,CHIP;10000nF,20%,16V,X5R,TP,3216	1	SA
....4	C820	2203-006333	C-CER,CHIP;10000nF,20%,16V,X5R,TP,3216	1	SA
....4	C822	2203-006333	C-CER,CHIP;10000nF,20%,16V,X5R,TP,3216	1	SA
....4	C1012	2402-000209	C-AL,SMD;22uF,20%,16V,WT,TP,5.3x5.3mm	1	SA
....4	C108	2402-000209	C-AL,SMD;22uF,20%,16V,WT,TP,5.3x5.3mm	1	SA
....4	C110	2402-000209	C-AL,SMD;22uF,20%,16V,WT,TP,5.3x5.3mm	1	SA
....4	C1106	2402-000209	C-AL,SMD;22uF,20%,16V,WT,TP,5.3x5.3mm	1	SA
....4	C120	2402-000209	C-AL,SMD;22uF,20%,16V,WT,TP,5.3x5.3mm	1	SA
....4	C130	2402-000209	C-AL,SMD;22uF,20%,16V,WT,TP,5.3x5.3mm	1	SA
....4	C1301	2402-000209	C-AL,SMD;22uF,20%,16V,WT,TP,5.3x5.3mm	1	SA
....4	C137	2402-000209	C-AL,SMD;22uF,20%,16V,WT,TP,5.3x5.3mm	1	SA
....4	C138	2402-000209	C-AL,SMD;22uF,20%,16V,WT,TP,5.3x5.3mm	1	SA
....4	C1407	2402-000209	C-AL,SMD;22uF,20%,16V,WT,TP,5.3x5.3mm	1	SA
....4	C1408	2402-000209	C-AL,SMD;22uF,20%,16V,WT,TP,5.3x5.3mm	1	SA
....4	C1412	2402-000209	C-AL,SMD;22uF,20%,16V,WT,TP,5.3x5.3mm	1	SA
....4	C154	2402-000209	C-AL,SMD;22uF,20%,16V,WT,TP,5.3x5.3mm	1	SA
....4	C1794	2402-000209	C-AL,SMD;22uF,20%,16V,WT,TP,5.3x5.3mm	1	SA
....4	C366	2402-000209	C-AL,SMD;22uF,20%,16V,WT,TP,5.3x5.3mm	1	SA
....4	C503	2402-000209	C-AL,SMD;22uF,20%,16V,WT,TP,5.3x5.3mm	1	SA
....4	C516	2402-000209	C-AL,SMD;22uF,20%,16V,WT,TP,5.3x5.3mm	1	SA
....4	C911	2402-000209	C-AL,SMD;22uF,20%,16V,WT,TP,5.3x5.3mm	1	SA
....4	C106	2402-001081	C-AL,SMD;100uF,20%,25V,WT,TP,8.3x8.3x10	1	SA
....4	C112	2402-001081	C-AL,SMD;100uF,20%,25V,WT,TP,8.3x8.3x10	1	SA
....4	C113	2402-001081	C-AL,SMD;100uF,20%,25V,WT,TP,8.3x8.3x10	1	SA
....4	C119	2402-001081	C-AL,SMD;100uF,20%,25V,WT,TP,8.3x8.3x10	1	SA
....4	C139	2402-001081	C-AL,SMD;100uF,20%,25V,WT,TP,8.3x8.3x10	1	SA
....4	C140	2402-001081	C-AL,SMD;100uF,20%,25V,WT,TP,8.3x8.3x10	1	SA
....4	C142	2402-001081	C-AL,SMD;100uF,20%,25V,WT,TP,8.3x8.3x10	1	SA
....4	C143	2402-001081	C-AL,SMD;100uF,20%,25V,WT,TP,8.3x8.3x10	1	SA
....4	C160	2402-001081	C-AL,SMD;100uF,20%,25V,WT,TP,8.3x8.3x10	1	SA
....4	C1011	2402-001086	C-AL,SMD;100UF,20%,16V,WT,TP,6.6X6.6X5.3	1	SA
....4	C1103	2402-001086	C-AL,SMD;100UF,20%,16V,WT,TP,6.6X6.6X5.3	1	SA
....4	C115	2402-001086	C-AL,SMD;100UF,20%,16V,WT,TP,6.6X6.6X5.3	1	SA
....4	C1213	2402-001086	C-AL,SMD;100UF,20%,16V,WT,TP,6.6X6.6X5.3	1	SA
....4	C1214	2402-001086	C-AL,SMD;100UF,20%,16V,WT,TP,6.6X6.6X5.3	1	SA
....4	C1215	2402-001086	C-AL,SMD;100UF,20%,16V,WT,TP,6.6X6.6X5.3	1	SA
....4	C1404	2402-001086	C-AL,SMD;100UF,20%,16V,WT,TP,6.6X6.6X5.3	1	SA
....4	C1503	2402-001086	C-AL,SMD;100UF,20%,16V,WT,TP,6.6X6.6X5.3	1	SA
....4	C1504	2402-001086	C-AL,SMD;100UF,20%,16V,WT,TP,6.6X6.6X5.3	1	SA
....4	C151	2402-001086	C-AL,SMD;100UF,20%,16V,WT,TP,6.6X6.6X5.3	1	SA
....4	C156	2402-001086	C-AL,SMD;100UF,20%,16V,WT,TP,6.6X6.6X5.3	1	SA
....4	C1601	2402-001086	C-AL,SMD;100UF,20%,16V,WT,TP,6.6X6.6X5.3	1	SA
....4	C1795	2402-001086	C-AL,SMD;100UF,20%,16V,WT,TP,6.6X6.6X5.3	1	SA
....4	C360	2402-001086	C-AL,SMD;100UF,20%,16V,WT,TP,6.6X6.6X5.3	1	SA
....4	C363	2402-001086	C-AL,SMD;100UF,20%,16V,WT,TP,6.6X6.6X5.3	1	SA
....4	C505	2402-001086	C-AL,SMD;100UF,20%,16V,WT,TP,6.6X6.6X5.3	1	SA
....4	C507	2402-001086	C-AL,SMD;100UF,20%,16V,WT,TP,6.6X6.6X5.3	1	SA
....4	C1220	2402-001097	C-AL,SMD;0.1UF,20%,50V,WT,TP,4.3X4.3X5.2	1	SA
....4	C1221	2402-001097	C-AL,SMD;0.1UF,20%,50V,WT,TP,4.3X4.3X5.2	1	SA
....4	C1151	2402-001128	C-AL,SMD;100UF,20%,16V,WT,TP,6.3X5.7MM	1	SA
....4	C1154	2402-001128	C-AL,SMD;100UF,20%,16V,WT,TP,6.3X5.7MM	1	SA
....4	C1155	2402-001128	C-AL,SMD;100UF,20%,16V,WT,TP,6.3X5.7MM	1	SA
....4	C123	2402-001128	C-AL,SMD;100UF,20%,16V,WT,TP,6.3X5.7MM	1	SA
....4	C133	2402-001128	C-AL,SMD;100UF,20%,16V,WT,TP,6.3X5.7MM	1	SA
....4	C1702	2402-001128	C-AL,SMD;100UF,20%,16V,WT,TP,6.3X5.7MM	1	SA
....4	C1703	2402-001128	C-AL,SMD;100UF,20%,16V,WT,TP,6.3X5.7MM	1	SA
....4	C1704	2402-001128	C-AL,SMD;100UF,20%,16V,WT,TP,6.3X5.7MM	1	SA
....4	C1745	2402-001128	C-AL,SMD;100UF,20%,16V,WT,TP,6.3X5.7MM	1	SA
....4	C1746	2402-001128	C-AL,SMD;100UF,20%,16V,WT,TP,6.3X5.7MM	1	SA
....4	C314	2402-001128	C-AL,SMD;100UF,20%,16V,WT,TP,6.3X5.7MM	1	SA
....4	C375	2402-001128	C-AL,SMD;100UF,20%,16V,WT,TP,6.3X5.7MM	1	SA
....4	C519	2402-001128	C-AL,SMD;100UF,20%,16V,WT,TP,6.3X5.7MM	1	SA
....4	C312	2402-001129	C-AL,SMD;47UF,20%,16V,WT,TP,6.3X5.2MM	1	SA
....4	C321	2402-001129	C-AL,SMD;47UF,20%,16V,WT,TP,6.3X5.2MM	1	SA
....4	C330	2402-001129	C-AL,SMD;47UF,20%,16V,WT,TP,6.3X5.2MM	1	SA
....4	C341	2402-001129	C-AL,SMD;47UF,20%,16V,WT,TP,6.3X5.2MM	1	SA
....4	C374	2402-001129	C-AL,SMD;47UF,20%,16V,WT,TP,6.3X5.2MM	1	SA
....4	C529	2402-001147	C-AL,SMD;3.3UF,20%,50V,WT,TP,4X5.8MM	1	SA
....4	C1028	2402-001155	C-AL,SMD;47UF,20%,16V,WT,TP,6.3X5.2MM	1	SA
....4	C1029	2402-001155	C-AL,SMD;47UF,20%,16V,WT,TP,6.3X5.2MM	1	SA

Level	Loc. No.	Code No.	Description & Specification	Q'ty	SA/SNA
....4	C708	2402-001155	C-AL,SMD;47UF,20%,16V,WT,TP,6.3X5.2MM	1	SA
....4	C369	2402-001160	C-AL,SMD;330UF,20%,16V,WT,TP,1008	1	SA
....4	C311	2402-001178	C-AL,SMD;10uF,20%,16V,WT,TP,4.3x4.3x5.8m	1	SA
....4	C317	2402-001178	C-AL,SMD;10uF,20%,16V,WT,TP,4.3x4.3x5.8m	1	SA
....4	C339	2402-001178	C-AL,SMD;10uF,20%,16V,WT,TP,4.3x4.3x5.8m	1	SA
....4	C343	2402-001178	C-AL,SMD;10uF,20%,16V,WT,TP,4.3x4.3x5.8m	1	SA
....4	C349	2402-001178	C-AL,SMD;10uF,20%,16V,WT,TP,4.3x4.3x5.8m	1	SA
....4	C351	2402-001178	C-AL,SMD;10uF,20%,16V,WT,TP,4.3x4.3x5.8m	1	SA
....4	C301	2402-001183	C-AL,SMD;22UF,20%,16V,WT,TP,5.3X5.3X6MM	1	SA
....4	C328	2402-001183	C-AL,SMD;22UF,20%,16V,WT,TP,5.3X5.3X6MM	1	SA
....4	C1701	2402-001210	C-POLYMER AL CHIP;100uF,20%,10V,WT,TP,7.	1	SA
....4	C1410	2402-001226	C-AL,SMD;4.7UF,20%,35V,HR,TP,4.3X4.3X5.8	1	SA
....4	C1411	2402-001226	C-AL,SMD;4.7UF,20%,35V,HR,TP,4.3X4.3X5.8	1	SA
....4	C1413	2402-001226	C-AL,SMD;4.7UF,20%,35V,HR,TP,4.3X4.3X5.8	1	SA
....4	C1414	2402-001226	C-AL,SMD;4.7UF,20%,35V,HR,TP,4.3X4.3X5.8	1	SA
....4	C1517	2402-001230	C-AL,SMD;2.2uF,¡¾20%,35V,WT,TP,3*5.2	1	SA
....4	C337	2402-001238	C-AL,SMD;1uF,20%,50V,HR,TP,4.3x4.3x5.2mm	1	SA
....4	C338	2402-001238	C-AL,SMD;1uF,20%,50V,HR,TP,4.3x4.3x5.2mm	1	SA
....4	C346	2402-001238	C-AL,SMD;1uF,20%,50V,HR,TP,4.3x4.3x5.2mm	1	SA
....4	C348	2402-001238	C-AL,SMD;1uF,20%,50V,HR,TP,4.3x4.3x5.2mm	1	SA
....4	C534	2402-001238	C-AL,SMD;1uF,20%,50V,HR,TP,4.3x4.3x5.2mm	1	SA
....4	C401	2402-001257	C-AL,SMD;470uF,20%,16V,-,TP,8.3*10	1	SA
....4	C435	2402-001257	C-AL,SMD;470uF,20%,16V,-,TP,8.3*10	1	SA
....4	C1311	2402-001262	C-AL,SMD;47uF,+-20%,6.3V,WT,SMD,5x5.2	1	SA
....4	C128	2409-001029	C-ORGANIC;120uF,20%,6.3V,WT,TP,10.3x10.3	1	SA
....4	C135	2409-001029	C-ORGANIC;120uF,20%,6.3V,WT,TP,10.3x10.3	1	SA
....4	C364	2409-001029	C-ORGANIC;120uF,20%,6.3V,WT,TP,10.3x10.3	1	SA
....4	C518	2409-001118	C-POLYMER ,CHIP;47uF,-+20,10V,WT,REEL,3.	1	SA
....4	T0052	2703-000158	INDUCTOR-SMD;1uH,10%,2012	1	SA
....4	T0052	2703-000398	INDUCTOR-SMD;10uH,10%,3225	1	SA
....4	T0052	2703-000398	INDUCTOR-SMD;10uH,10%,3225	1	SA
....4	T0052	2703-000398	INDUCTOR-SMD;10uH,10%,3225	1	SA
....4	T0052	2703-000398	INDUCTOR-SMD;10uH,10%,3225	1	SA
....4	T0052	2703-000398	INDUCTOR-SMD;10uH,10%,3225	1	SA
....4	T0052	2703-000398	INDUCTOR-SMD;10uH,10%,3225	1	SA
....4	T0052	2703-000398	INDUCTOR-SMD;10uH,10%,3225	1	SA
....4	T0052	2703-000398	INDUCTOR-SMD;10uH,10%,3225	1	SA
....4	T0052	2703-000398	INDUCTOR-SMD;10uH,10%,3225	1	SA
....4	T0052	2703-000398	INDUCTOR-SMD;10uH,10%,3225	1	SA
....4	T0052	2703-000398	INDUCTOR-SMD;10uH,10%,3225	1	SA
....4	T0052	2703-000398	INDUCTOR-SMD;10uH,10%,3225	1	SA
....4	T0052	2703-000398	INDUCTOR-SMD;10uH,10%,3225	1	SA
....4	T0052	2703-000398	INDUCTOR-SMD;10uH,10%,3225	1	SA
....4	T0052	2703-000398	INDUCTOR-SMD;10uH,10%,3225	1	SA
....4	T0052	2703-000398	INDUCTOR-SMD;10uH,10%,3225	1	SA
....4	T0052	2703-000398	INDUCTOR-SMD;10uH,10%,3225	1	SA
....4	T0052	2703-000398	INDUCTOR-SMD;10uH,10%,3225	1	SA
....4	T0052	2703-000398	INDUCTOR-SMD;10uH,10%,3225	1	SA
....4	T0052	2703-000417	INDUCTOR-SMD;220uH,5%,3225	1	SA
....4	T0052	2703-001426	INDUCTOR-SMD;680uH,20%,7070	1	SA
....4	T0052	2703-001778	INDUCTOR-SMD;3.3uH,20%,3225	1	SA
....4	T0052	2703-001778	INDUCTOR-SMD;3.3uH,20%,3225	1	SA
....4	T0052	2703-002915	INDUCTOR-SMD;22uH,20%,8080	1	SA
....4	T0052	2703-002915	INDUCTOR-SMD;22uH,20%,8080	1	SA
....4	T0052	2703-002915	INDUCTOR-SMD;22uH,20%,8080	1	SA
....4	T0052	2703-002915	INDUCTOR-SMD;22uH,20%,8080	1	SA
....4	X1301	2801-000258	CRYSTAL-SMD;0.032768MHz,20ppm,SMD,12.5pF	1	SA
....4	X201	2801-003326	CRYSTAL-SMD;24MHZ,30PPM,28-ABX,20PF,50OH	1	SA
....4	X301	2801-003954	CRYSTAL-SMD;27MHz,30ppm,28-AAN,16pF,50oh	1	SA
....4	X901	2801-004483	CRYSTAL-SMD;28.322MHz,30ppm,HC-49,20pF,5	1	SA
....4	X1302	2804-001370	OSCILLATOR-CLOCK;48MHz,100ppm,10TTL/CMOS	1	SA
....4	X1303	2806-001308	OSCILLATOR-VCXO;27MHZ,-,30PF,TP,3.3V,50M	1	SA
....4	F103	2901-001114	FILTER-EMI SMD;25VDC,2.0ADC,-,100nF,3.2x	1	SA
....4	T0568	3301-001082	BEAD-SMD;60ohm,3225,TP,43ohm/40MHz,83ohm	1	SNA
....4	T0568	3301-001145	BEAD-SMD;60ohm,4516,TP,70ohm/45MHz,82ohm	1	SNA
....4	T0568	3301-001145	BEAD-SMD;60ohm,4516,TP,70ohm/45MHz,82ohm	1	SNA
....4	T0568	3301-001145	BEAD-SMD;60ohm,4516,TP,70ohm/45MHz,82ohm	1	SNA
....4	T0568	3301-001145	BEAD-SMD;60ohm,4516,TP,70ohm/45MHz,82ohm	1	SNA
....4	T0568	3301-001145	BEAD-SMD;60ohm,4516,TP,70ohm/45MHz,82ohm	1	SNA
....4	T0568	3301-001145	BEAD-SMD;60ohm,4516,TP,70ohm/45MHz,82ohm	1	SNA
....4	T0568	3301-001145	BEAD-SMD;60ohm,4516,TP,70ohm/45MHz,82ohm	1	SNA

Level	Loc. No.	Code No.	Description & Specification	Q'ty	SA/SNA
....4	T0568	3301-001145	BEAD-SMD;60ohm,4516,TP,70ohm/45MHz,82ohm	1	SNA
....4	T0568	3301-001145	BEAD-SMD;60ohm,4516,TP,70ohm/45MHz,82ohm	1	SNA
....4	T0568	3301-001145	BEAD-SMD;60ohm,4516,TP,70ohm/45MHz,82ohm	1	SNA
....4	T0568	3301-001145	BEAD-SMD;60ohm,4516,TP,70ohm/45MHz,82ohm	1	SNA
....4	T0568	3301-001236	BEAD-SMD;60ohm,1608,-,-,-	1	SNA
....4	T0568	3301-001236	BEAD-SMD;60ohm,1608,-,-,-	1	SNA
....4	T0568	3301-001236	BEAD-SMD;60ohm,1608,-,-,-	1	SNA
....4	T0568	3301-001236	BEAD-SMD;60ohm,1608,-,-,-	1	SNA
....4	T0568	3301-001236	BEAD-SMD;60ohm,1608,-,-,-	1	SNA
....4	T0568	3301-001236	BEAD-SMD;60ohm,1608,-,-,-	1	SNA
....4	T0568	3301-001236	BEAD-SMD;60ohm,1608,-,-,-	1	SNA
....4	T0568	3301-001236	BEAD-SMD;60ohm,1608,-,-,-	1	SNA
....4	T0568	3301-001236	BEAD-SMD;60ohm,1608,-,-,-	1	SNA
....4	T0568	3301-001404	BEAD-SMD;30ohm,2012,TP,-,-	1	SA
....4	T0568	3301-001404	BEAD-SMD;30ohm,2012,TP,-,-	1	SA
....4	T0568	3301-001404	BEAD-SMD;30ohm,2012,TP,-,-	1	SA
....4	T0568	3301-001404	BEAD-SMD;30ohm,2012,TP,-,-	1	SA
....4	T0568	3301-001404	BEAD-SMD;30ohm,2012,TP,-,-	1	SA
....4	T0568	3301-001404	BEAD-SMD;30ohm,2012,TP,-,-	1	SA
....4	T0568	3301-001404	BEAD-SMD;30ohm,2012,TP,-,-	1	SA
....4	T0568	3301-001404	BEAD-SMD;30ohm,2012,TP,-,-	1	SA
....4	T0568	3301-001404	BEAD-SMD;30ohm,2012,TP,-,-	1	SA
....4	T0568	3301-001404	BEAD-SMD;30ohm,2012,TP,-,-	1	SA
....4	T0568	3301-001404	BEAD-SMD;30ohm,2012,TP,-,-	1	SA
....4	T0568	3301-001404	BEAD-SMD;30ohm,2012,TP,-,-	1	SA
....4	T0568	3301-001404	BEAD-SMD;30ohm,2012,TP,-,-	1	SA
....4	T0568	3301-001404	BEAD-SMD;30ohm,2012,TP,-,-	1	SA
....4	T0568	3301-001404	BEAD-SMD;30ohm,2012,TP,-,-	1	SA
....4	T0568	3301-001404	BEAD-SMD;30ohm,2012,TP,-,-	1	SA
....4	T0568	3301-001404	BEAD-SMD;30ohm,2012,TP,-,-	1	SA
....4	T0568	3301-001404	BEAD-SMD;30ohm,2012,TP,-,-	1	SA
....4	T0568	3301-001404	BEAD-SMD;30ohm,2012,TP,-,-	1	SA
....4	T0568	3301-001404	BEAD-SMD;30ohm,2012,TP,-,-	1	SA
....4	T0568	3301-001404	BEAD-SMD;30ohm,2012,TP,-,-	1	SA
....4	T0568	3301-001404	BEAD-SMD;30ohm,2012,TP,-,-	1	SA
....4	T0568	3301-001404	BEAD-SMD;30ohm,2012,TP,-,-	1	SA
....4	T0568	3301-001404	BEAD-SMD;30ohm,2012,TP,-,-	1	SA
....4	T0568	3301-001404	BEAD-SMD;30ohm,2012,TP,-,-	1	SA
....4	T0568	3301-001404	BEAD-SMD;30ohm,2012,TP,-,-	1	SA
....4	T0568	3301-001404	BEAD-SMD;30ohm,2012,TP,-,-	1	SA
....4	T0568	3301-001404	BEAD-SMD;30ohm,2012,TP,-,-	1	SA
....4	T0568	3301-001569	BEAD-SMD;600ohm,2012,1000mA,TP,520ohm/90	1	SNA
....4	JA802	3701-001311	CONNECTOR-HDMI;21P,2R,FEMALE,SMD-S,AU30U	1	SA
....4	JA804	3701-001311	CONNECTOR-HDMI;21P,2R,FEMALE,SMD-S,AU30U	1	SA
....4	CN401	3711-005291	HEADER-BOARD TO CABLE;BOX,2P,1R,2MM,SMD-	1	SA
....4	CN402	3711-005292	HEADER-BOARD TO CABLE;BOX,3P,1R,2MM,SMD-	1	SA
....4	CN702	3711-005497	HEADER-BOARD TO CABLE;BOX,15P,1R,1.25MM,	1	SA
....4	CN1302	3711-005499	HEADER-BOARD TO CABLE;BOX,8P,1R,1.25mm,S	1	SA
....4	L101	BN27-00008A	COIL CHOKE-SMD;SMD12*12*8.5,GH15/17PS,22	1	SA
....4	L102	BN27-00008A	COIL CHOKE-SMD;SMD12*12*8.5,GH15/17PS,22	1	SA
....4	MAIN	BN97-00965A	ASSY MICOM-AMZ;vxWorks_romCompress-,LNS2	1	SNA
.....5	IC115	1107-001228	IC-FLASH MEMORY;28F640,64Mbit,8Mx8/4Mx16	1	SA
....4	SUB	BN97-00965D	ASSY MICOM-AMZ;T-BORDNUS5-0057,LNS2641,0	1	SNA
.....5	IC520	0903-001389	IC-MICROCONTROLLER;S3F866B,8Bit,QFP,44P,	1	SNA
....4	T0077	BN41-00679B	PCB MAIN;FR-4,4,0.1,1.486,240x192	1	SNA
...3	T0568	BP39-00217A	CBF IF;HLR5668WAX,1PIN,1365#26,80mm,BK,D	1	SA
...3	T0066	BP62-00047B	HEAT SINK-ES;MU15UO,A6063S,T2.5,13,13,TA	1	SNA
...3	T0066	BP62-00017A	HEAT SINK-ES;SP-50L2HX,A6063S,T2.0,26.2,	1	SNA
1	M0019	BN92-01801J	ASSY LABEL;LNS2641,3241DX/XAA	1	SNA

6-3 LN-S4041D Parts List

Level	Loc. No.	Code No.	Description & Specification	Q'ty	SA/SNA
0		LNS4041DX/XAP	LN-S4041D,E62C/40T70-GSM,40,LCD-TV,PANAM	0	
1	M0001	BN90-00857A	ASSY COVER FRONT;40T70,UO,SONOMA	1	SNA
..2	M0081	6006-001096	SCREW-TAPTITE;BH,+,WP,B,M4.0,L12,ZPC(BLK	4	SNA
..2	T0003	BN96-03184A	ASSY COVER P-FRONT;40T70,UO,HIPS,V0,BK50	1	SA
...3	M0081	6003-001003	SCREW-TAPTITE;BH,+,B,M4,L12,ZPC(BLK),SWR	2	SNA
...3	M0081	6003-001003	SCREW-TAPTITE;BH,+,B,M4,L12,ZPC(BLK),SWR	1	SNA
...3	M0081	6003-001003	SCREW-TAPTITE;BH,+,B,M4,L12,ZPC(BLK),SWR	2	SNA
...3	M0112	BN63-02407A	COVER-FRONT;40T70,UO,HIPS,V0,BK500,BKP-1	1	SNA
...3	T0056	BN63-02414A	COVER-DECORATION;SONOMA 40,HIPS,HB,GR503	1	SNA
...3	T0059	BN64-00379A	INDICATOR LED;ROME-II,23,PC,CLEAR	1	SNA
...3	T0061	BN64-00453A	WINDOW-REMOCON;32R71,PC,V0,VIOLET,DIFFUS	1	SNA
...3	T0022	BN64-00467A	KNOB CONTROL;SONOMA26,32,40,ABS,-,-,-,V0	1	SNA
...3	T0023	BN64-00476A	KNOB POWER;SONOMA,26,32,40,HIPS,HB,GR503	1	SNA
...3	T0054	BN64-00477A	KNOB-DECORATION;SONOMA26,32,40,ABS,HB,GR	1	SNA
...3	T0382	BP61-00509C	HOLDER-CARE;PJT,ACRYL-FOAM,T0.25,W20.0mm	0.28	SNA
...3	M0162	6502-001067	CABLE CLAMP;DAFC-1300,ID2.2,T5.2,NYLIN6/	2	SNA
...3	T0069	AA60-00171G	SPACER-FELT;43L2,FELT,550,T0.5,10	2	SNA
...3	M0146	BN96-03438A	ASSY BOARD P-POWER & IR;BORDEAUX2,CT5000	1	SA
...3	M0145	BN96-03466A	ASSY BOARD P-FUNCTION;SONOMA,SJ06-01-008	1	SA
...3	T0060	BN61-01655A	SPRING ETC;STS-304 SUS,D8,L12,T0.5	1	SA
..2	T0382	BP61-00495C	HOLDER-CARE;PJT,ACRYL-FOAM,T0.25,W30.0mm	0.2	SNA
..2	T0175	BN96-03247A	ASSY SPEAKER P;8ohm,Sonoma 32,Left,10W,N	1	SA
..2	T0175	BN96-03248A	ASSY SPEAKER P;8ohm,Sonoma 32,Right,10W,	1	SA
1	M0216	BN90-00875A	ASSY STAND;40T70,SONOMA	1	SNA
..2	T0081	6002-001294	SCREW-TAPPING;BH,+,,M4,L16,ZPC(BLK)	4	SA
..2	M0013	BN96-03190A	ASSY STAND P-BASE;40T70,HIPS,HB,BK500,BK	1	SA
...3	T0081	6002-001294	SCREW-TAPPING;BH,+,,M4,L16,ZPC(BLK)	7	SA
...3	M0081	6003-001239	SCREW-TAPTITE;FH,+,B,M4,L10,ZPC(YEL),SWR	11	SA
...3		BN61-01811A	BRACKET-STAND BOTTOM;40 MILANO,SECC,T3.0	1	SNA
...3		BN61-02361A	GUIDE-STAND;SONOMA 40,HIPS V0,BK500	1	SNA
...3	M0111	BN63-01939C	COVER-STAND;40T70,HIPS,HB,BK500,BKP-1526	1	SNA
...3	T0132	BN73-00052A	RUBBER FOOT;ARES 17,SILICON,DIA 17 * T1.	9	SNA
1	M0002	BN90-00878A	ASSY COVER REAR;40T70,UO	1	SNA
..2	T0081	6002-001294	SCREW-TAPPING;BH,+,,M4,L16,ZPC(BLK)	12	SA
..2	T0081	6002-001294	SCREW-TAPPING;BH,+,,M4,L16,ZPC(BLK)	3	SA
..2	M0013	BN96-03187A	ASSY COVER P-REAR;40T70,UO,HIPS,V0,BK500	1	SA
...3	T0101	BN61-02032A	BRACKET-WALL;32,MGM,SECC,T1.6	1	SNA
...3	M0006	BN63-02411A	COVER-REAR;40T70,UO,HIPS,VO,BK500,SONOMA	1	SNA
...3	T0064	BN65-00002A	CLAMPER CORE;BORDEAUX,PP,V0,BLK	1	SNA
...3	T0071	BN64-00447K	INLAY-TERMINAL;32,40T70,PS SHEET,T0.5,-,	1	SNA
1	M0112	BN91-01008T	ASSY SHIELD;LNS4041DX/*	1	SNA
..2	M0081	6003-000115	SCREW-TAPTITE;BH,+,B,M3,L6,ZPC(BLK),SWRC	4	SNA
..2	M0081	6003-000115	SCREW-TAPTITE;BH,+,B,M3,L6,ZPC(BLK),SWRC	6	SNA
..2	M0081	6003-000115	SCREW-TAPTITE;BH,+,B,M3,L6,ZPC(BLK),SWRC	7	SNA
..2	M0081	6003-000133	SCREW-TAPTITE;BH,+,-S,M4,L8,ZPC(BLK),SW	3	SA
..2	M0081	6003-000133	SCREW-TAPTITE;BH,+,-S,M4,L8,ZPC(BLK),SW	2	SA
..2	M0081	6003-001003	SCREW-TAPTITE;BH,+,B,M4,L12,ZPC(BLK),SWR	2	SNA
..2	M0081	6003-001003	SCREW-TAPTITE;BH,+,B,M4,L12,ZPC(BLK),SWR	1	SNA
..2	M0081	6003-001003	SCREW-TAPTITE;BH,+,B,M4,L12,ZPC(BLK),SWR	6	SNA
..2	M0081	6003-001003	SCREW-TAPTITE;BH,+,B,M4,L12,ZPC(BLK),SWR	2	SNA
..2	M0081	6003-001003	SCREW-TAPTITE;BH,+,B,M4,L12,ZPC(BLK),SWR	3	SNA
..2	M0081	6003-001003	SCREW-TAPTITE;BH,+,B,M4,L12,ZPC(BLK),SWR	3	SNA
..2	M0081	6003-001003	SCREW-TAPTITE;BH,+,B,M4,L12,ZPC(BLK),SWR	3	SNA
..2	T0081	6006-000245	SCREW-MACHINE;WSP,PH,+,M4,L8,ZPC(YEL),SW	1	SNA
..2	T0562	6046-001013	STAND OFF;M3,L5,Ni PLT,SUM24L,#4-40	2	SNA
..2	M2893	BH39-00362G	LEAD CONNECTOR;SONOMA,UL1007#26,5PIN,100	1	SA
..2	T0076	BN39-00615D	CBF HARNESS;BORDEAUX,1617#22,3P,1P,RING,	1	SA
..2	M2893	BN39-00691B	LEAD CONNECTOR;LE32R71BX,UL1007#26,16P,1	1	SA
..2	M2893	BN39-00712E	LEAD CONNECTOR-LVDS;Bordeaux,UL1571#30,U	1	SA
..2	M2893	BN39-00716B	LEAD CONNECTOR;LE40R71BX/XEC,UL3239#24,2	1	SA
..2	M2893	BN39-00717A	LEAD CONNECTOR;LE32R71BX/XEC,UL3443#28,5	1	SA
..2	M0174	BN44-00134C	IP BOARD;PSIV230601A,40"BORDEAUX,2.0~3.0	1	SA
..2	M0114	BN61-01778A	HOLDER-WIRE;NYLON-66,NATURAL or GRAY,DAF	1	SA
..2		BN61-02256B	BRACKET-PANEL SIDE;Bordeaux 40,SECC,T1.2	1	SNA
..2		BN61-02257B	BRACKET-PANEL SIDE;Bordeaux 40,SECC,T1.2	1	SNA
..2		BN61-02258A	BRACKET-STAND LINK;Bordeaux 40,SECC,T1.6	1	SNA
..2	M0114	BN61-02500A	HOLDER-WIRE;NYLON6.6,NATURAL	2	SNA
..2	CCMM1	BN73-00024D	SILICON/RUBBER;BORDEAUX,SILICON,28x28XT6	1	SA

Level	Loc. No.	Code No.	Description & Specification	Q'ty	SA/SNA
..2		BN96-03186A	ASSY BOARD P-HOLDER AV;SONOMA,40,UO	1	SNA
...3		BN61-02365A	HOLDER-SIDE AV;SONOMA 32,HIPS V0,BK500	1	SNA
...3	T0578	BN64-00454B	INLAY AV;BORDEAUX,H/GLOSSY,PS SHEET,T0.3	1	SNA
...3	M0020	BN96-02439A	ASSY BOARD P-SUB AV SIDE;MILANO,CT5000-3	1	SA
...3	M2893	BN39-00672B	LEAD CONNECTOR;LNR469DX/XAA,UL2835#28,14	1	SA
..2	T0175	BN96-03298A	ASSY SHIELD P-PCB MAIN;BORDEAUX,40,SECC,	1	SNA
...3	M0131	AA63-01448A	GASKET;Bordeaux,Conductive Fabric,15mm,7	1	SNA
...3	T0603	BN63-02325A	SHIELD-PCB MAIN;Bordeaux 32,SECC,T0.5,BU	1	SNA
...3	M0131	AA63-01436A	GASKET;Bordeaux,Conductive Fabric,5mm,7m	1	SNA
..2	T0447	BN96-03528A	ASSY BRACKET P-PANEL;SONOMA,40,SECC,BUIL	1	SA
...3	M0081	6003-000115	SCREW-TAPTITE;BH,+,B,M3,L6,ZPC(BLK),SWRC	2	SNA
...3	M0131	AA63-01401A	GASKET;LE40R71BX,Conductive Fabric,22mm,	1	SNA
...3	M0131	AA63-01438A	GASKET;Bordeaux,Conductive Fabric,7mm,8m	1	SNA
...3	M0146	BN61-02251B	BRACKET-PANEL TOP;Bordeaux 40,SECC,T1.2	1	SNA
...3		BN61-02252B	BRACKET-PANEL BOTTOM;Bordeaux 40,SECC,T1	1	SNA
...3		BN61-02253B	BRACKET-GUIDE MAIN;Bordeaux 40,SECC,T1.2	1	SNA
...3		BN61-02254B	BRACKET-GUIDE POWER;Bordeaux 40,UO,SECC,	1	SNA
...3		BN61-02255A	BRACKET-GUIDE POWER;Bordeaux 40,SECC,T1.	1	SNA
...3	T0101	BN61-02438A	BRACKET-WALL;MOSEL 40,SECC T1.6	1	SNA
1	T0852	BN91-01017B	ASSY LCD-SPZ;LE40R71BX/*	1	SNA
..2	M0215	BN07-00264A	LCD-PANEL;LTA400WT-L01,8bit,952*551*51.0	1	SA
1	M0017	BN91-01054E	ASSY CHASSIS-SPZ;LNS4041DX/XAA,AM LCD	1	SNA
..2	M0014	BN94-00963E	ASSY PCB MAIN-SPZ;LNS4041DX/XAA	1	SA
...3	T0245	0202-001522	SOLDER-WIRE FLUX;LFA3-107,-,D1.2,96.5Sn/	0.25	SNA
...3	JA801	3701-001294	CONNECTOR-DSUB;15P,3R,FEMALE,STRAIGHT,AU	1	SA
...3	CN330	3711-004236	HEADER-BOARD TO CABLE;BOX,6P,1R,2MM,STRA	1	SA
...3	CN330	3711-004484	HEADER-BOARD TO CABLE;BOX,5P,1R,2mm,STRA	1	SA
...3	CN330	3711-004484	HEADER-BOARD TO CABLE;BOX,5P,1R,2mm,STRA	1	SA
...3	CN330	3711-004909	HEADER-BOARD TO CABLE;BOX,14P,2R,2MM,ANG	1	SA
...3	CN1003	3711-005884	HEADER-BOARD TO BOARD;BOX,30P,2R,2mm,ANG	1	SA
...3	CN330	3711-005942	HEADER-BOARD TO CABLE;BOX,16P,1R,2mm,STR	1	SA
...3	JA330	3722-001061	JACK-PHONE;1P,3.6PI,AG,BLK,N	1	SA
...3	JA330	3722-001061	JACK-PHONE;1P,3.6PI,AG,BLK,N	1	SA
...3	CN1301	3722-001147	JACK-USB;4P/1C,AU,BLK,STRAIGHT,A TYPE	1	SA
...3	JA332	3722-001734	JACK-VHS;4P,SN,BLK,STRAIGHT	1	SA
...3	JA333	3722-001903	JACK-PIN;2P,-,AU,WHT/RED,-	1	SA
...3	JA333	3722-001903	JACK-PIN;2P,-,AU,WHT/RED,-	1	SA
...3	JA333	3722-001903	JACK-PIN;2P,-,AU,WHT/RED,-	1	SA
...3	JA333	3722-001938	JACK-PIN;3P,-,AU,GRN/BLU/RED,-	1	SA
...3	JA333	3722-002063	JACK-PIN;3P,AU,YEL/WHT/RED,STRAIGHT	1	SA
...3	CIS3	BN40-00081A	TUNER;DNVS303HH261A,DNVS303HH261A,VSB/QA	1	SA
...3	T0253	BN59-00498A	MODULE-SPLITTER;UMX-NT-059,UMX-NT-059,2i	1	SA
...3	T0852	BN96-01470A	ASSY BOARD P-OPTICAL;HP-P5581,OPTICAL	1	SA
....4	CN906	3707-001067	CONNECTOR-OPTICAL;PLUG,SM,-,4.4/2.0mm	1	SA
...3		BN97-00964E	ASSY SMD-SPZ;LNS4041DX/XAA	1	SNA
....4	CIS05	0202-001477	SOLDER-CREAM;LST309-M,-,D20~45§-,96.5Sn/	4.902	SNA
....4	D501	0401-001056	DIODE-SWITCHING;MMBD4148SE,100V,200mA,SO	1	SA
....4	D708	0401-001056	DIODE-SWITCHING;MMBD4148SE,100V,200mA,SO	1	SA
....4	D709	0401-001056	DIODE-SWITCHING;MMBD4148SE,100V,200mA,SO	1	SA
....4	D710	0401-001056	DIODE-SWITCHING;MMBD4148SE,100V,200mA,SO	1	SA
....4	D711	0401-001056	DIODE-SWITCHING;MMBD4148SE,100V,200mA,SO	1	SA
....4	D712	0401-001056	DIODE-SWITCHING;MMBD4148SE,100V,200mA,SO	1	SA
....4	D713	0401-001056	DIODE-SWITCHING;MMBD4148SE,100V,200mA,SO	1	SA
....4	D801	0401-001056	DIODE-SWITCHING;MMBD4148SE,100V,200mA,SO	1	SA
....4	D802	0401-001056	DIODE-SWITCHING;MMBD4148SE,100V,200mA,SO	1	SA
....4	D803	0401-001056	DIODE-SWITCHING;MMBD4148SE,100V,200mA,SO	1	SA
....4	D813	0401-001056	DIODE-SWITCHING;MMBD4148SE,100V,200mA,SO	1	SA
....4	D814	0401-001056	DIODE-SWITCHING;MMBD4148SE,100V,200mA,SO	1	SA
....4	D815	0401-001056	DIODE-SWITCHING;MMBD4148SE,100V,200mA,SO	1	SA
....4	D816	0401-001056	DIODE-SWITCHING;MMBD4148SE,100V,200mA,SO	1	SA
....4	D817	0401-001056	DIODE-SWITCHING;MMBD4148SE,100V,200mA,SO	1	SA
....4	D818	0401-001056	DIODE-SWITCHING;MMBD4148SE,100V,200mA,SO	1	SA
....4	D819	0401-001056	DIODE-SWITCHING;MMBD4148SE,100V,200mA,SO	1	SA
....4	D820	0401-001056	DIODE-SWITCHING;MMBD4148SE,100V,200mA,SO	1	SA
....4	D831	0401-001056	DIODE-SWITCHING;MMBD4148SE,100V,200mA,SO	1	SA
....4	D832	0401-001056	DIODE-SWITCHING;MMBD4148SE,100V,200mA,SO	1	SA
....4	D833	0401-001056	DIODE-SWITCHING;MMBD4148SE,100V,200mA,SO	1	SA
....4	D834	0401-001056	DIODE-SWITCHING;MMBD4148SE,100V,200mA,SO	1	SA
....4	D835	0401-001056	DIODE-SWITCHING;MMBD4148SE,100V,200mA,SO	1	SA
....4	D836	0401-001056	DIODE-SWITCHING;MMBD4148SE,100V,200mA,SO	1	SA

Level	Loc. No.	Code No.	Description & Specification	Q'ty	SA/SNA
....4	D837	0401-001056	DIODE-SWITCHING;MMBD4148SE,100V,200mA,SO	1	SA
....4	D838	0401-001056	DIODE-SWITCHING;MMBD4148SE,100V,200mA,SO	1	SA
....4	D101	0402-000553	DIODE-SCHOTTKY;SS24/B240,40V,2000mA,DO-2	1	SA
....4	D102	0402-000553	DIODE-SCHOTTKY;SS24/B240,40V,2000mA,DO-2	1	SA
....4	D1301	0403-000620	DIODE-ZENER;RLZ5.6B,5.45-5.73V,500mW,LL-	1	SA
....4	D1302	0403-000620	DIODE-ZENER;RLZ5.6B,5.45-5.73V,500mW,LL-	1	SA
....4	D206	0403-000620	DIODE-ZENER;RLZ5.6B,5.45-5.73V,500mW,LL-	1	SA
....4	D821	0403-000620	DIODE-ZENER;RLZ5.6B,5.45-5.73V,500mW,LL-	1	SA
....4	D822	0403-000620	DIODE-ZENER;RLZ5.6B,5.45-5.73V,500mW,LL-	1	SA
....4	D839	0403-000620	DIODE-ZENER;RLZ5.6B,5.45-5.73V,500mW,LL-	1	SA
....4	D840	0403-000620	DIODE-ZENER;RLZ5.6B,5.45-5.73V,500mW,LL-	1	SA
....4	D901	0403-000620	DIODE-ZENER;RLZ5.6B,5.45-5.73V,500mW,LL-	1	SA
....4	D902	0403-000620	DIODE-ZENER;RLZ5.6B,5.45-5.73V,500mW,LL-	1	SA
....4	D903	0403-000620	DIODE-ZENER;RLZ5.6B,5.45-5.73V,500mW,LL-	1	SA
....4	D904	0403-000620	DIODE-ZENER;RLZ5.6B,5.45-5.73V,500mW,LL-	1	SA
....4	D905	0403-000620	DIODE-ZENER;RLZ5.6B,5.45-5.73V,500mW,LL-	1	SA
....4	D906	0403-000620	DIODE-ZENER;RLZ5.6B,5.45-5.73V,500mW,LL-	1	SA
....4	D907	0403-000620	DIODE-ZENER;RLZ5.6B,5.45-5.73V,500mW,LL-	1	SA
....4	D908	0403-000620	DIODE-ZENER;RLZ5.6B,5.45-5.73V,500mW,LL-	1	SA
....4	D909	0403-000620	DIODE-ZENER;RLZ5.6B,5.45-5.73V,500mW,LL-	1	SA
....4	D910	0403-000620	DIODE-ZENER;RLZ5.6B,5.45-5.73V,500mW,LL-	1	SA
....4	D911	0403-000620	DIODE-ZENER;RLZ5.6B,5.45-5.73V,500mW,LL-	1	SA
....4	D912	0403-000620	DIODE-ZENER;RLZ5.6B,5.45-5.73V,500mW,LL-	1	SA
....4	D205	0403-001016	DIODE-ZENER;RLZ6.2B,5.96-6.27V,500mW,LL-	1	SA
....4	D804	0403-001016	DIODE-ZENER;RLZ6.2B,5.96-6.27V,500mW,LL-	1	SA
....4	D827	0403-001016	DIODE-ZENER;RLZ6.2B,5.96-6.27V,500mW,LL-	1	SA
....4	D601	0403-001052	DIODE-ZENER;RD8.2MB,7.7-8.7V,200mW,SOT-2	1	SA
....4	D602	0403-001052	DIODE-ZENER;RD8.2MB,7.7-8.7V,200mW,SOT-2	1	SA
....4	D603	0403-001052	DIODE-ZENER;RD8.2MB,7.7-8.7V,200mW,SOT-2	1	SA
....4	D604	0403-001052	DIODE-ZENER;RD8.2MB,7.7-8.7V,200mW,SOT-2	1	SA
....4	D605	0403-001052	DIODE-ZENER;RD8.2MB,7.7-8.7V,200mW,SOT-2	1	SA
....4	D606	0403-001052	DIODE-ZENER;RD8.2MB,7.7-8.7V,200mW,SOT-2	1	SA
....4	D607	0403-001052	DIODE-ZENER;RD8.2MB,7.7-8.7V,200mW,SOT-2	1	SA
....4	D608	0403-001052	DIODE-ZENER;RD8.2MB,7.7-8.7V,200mW,SOT-2	1	SA
....4	D609	0403-001052	DIODE-ZENER;RD8.2MB,7.7-8.7V,200mW,SOT-2	1	SA
....4	D610	0403-001052	DIODE-ZENER;RD8.2MB,7.7-8.7V,200mW,SOT-2	1	SA
....4	D611	0403-001052	DIODE-ZENER;RD8.2MB,7.7-8.7V,200mW,SOT-2	1	SA
....4	D612	0403-001052	DIODE-ZENER;RD8.2MB,7.7-8.7V,200mW,SOT-2	1	SA
....4	D613	0403-001052	DIODE-ZENER;RD8.2MB,7.7-8.7V,200mW,SOT-2	1	SA
....4	D614	0403-001052	DIODE-ZENER;RD8.2MB,7.7-8.7V,200mW,SOT-2	1	SA
....4	D615	0403-001052	DIODE-ZENER;RD8.2MB,7.7-8.7V,200mW,SOT-2	1	SA
....4	D616	0403-001052	DIODE-ZENER;RD8.2MB,7.7-8.7V,200mW,SOT-2	1	SA
....4	D617	0403-001052	DIODE-ZENER;RD8.2MB,7.7-8.7V,200mW,SOT-2	1	SA
....4	D618	0403-001052	DIODE-ZENER;RD8.2MB,7.7-8.7V,200mW,SOT-2	1	SA
....4	D619	0403-001052	DIODE-ZENER;RD8.2MB,7.7-8.7V,200mW,SOT-2	1	SA
....4	D620	0403-001052	DIODE-ZENER;RD8.2MB,7.7-8.7V,200mW,SOT-2	1	SA
....4	D621	0403-001052	DIODE-ZENER;RD8.2MB,7.7-8.7V,200mW,SOT-2	1	SA
....4	D622	0403-001052	DIODE-ZENER;RD8.2MB,7.7-8.7V,200mW,SOT-2	1	SA
....4	D623	0403-001052	DIODE-ZENER;RD8.2MB,7.7-8.7V,200mW,SOT-2	1	SA
....4	D624	0403-001052	DIODE-ZENER;RD8.2MB,7.7-8.7V,200mW,SOT-2	1	SA
....4	D625	0403-001052	DIODE-ZENER;RD8.2MB,7.7-8.7V,200mW,SOT-2	1	SA
....4	D626	0403-001052	DIODE-ZENER;RD8.2MB,7.7-8.7V,200mW,SOT-2	1	SA
....4	D627	0403-001052	DIODE-ZENER;RD8.2MB,7.7-8.7V,200mW,SOT-2	1	SA
....4	D805	0403-001052	DIODE-ZENER;RD8.2MB,7.7-8.7V,200mW,SOT-2	1	SA
....4	D806	0403-001052	DIODE-ZENER;RD8.2MB,7.7-8.7V,200mW,SOT-2	1	SA
....4	D807	0403-001052	DIODE-ZENER;RD8.2MB,7.7-8.7V,200mW,SOT-2	1	SA
....4	D808	0403-001052	DIODE-ZENER;RD8.2MB,7.7-8.7V,200mW,SOT-2	1	SA
....4	D809	0403-001052	DIODE-ZENER;RD8.2MB,7.7-8.7V,200mW,SOT-2	1	SA
....4	D810	0403-001052	DIODE-ZENER;RD8.2MB,7.7-8.7V,200mW,SOT-2	1	SA
....4	D811	0403-001052	DIODE-ZENER;RD8.2MB,7.7-8.7V,200mW,SOT-2	1	SA
....4	D812	0403-001052	DIODE-ZENER;RD8.2MB,7.7-8.7V,200mW,SOT-2	1	SA
....4	D823	0403-001052	DIODE-ZENER;RD8.2MB,7.7-8.7V,200mW,SOT-2	1	SA
....4	D824	0403-001052	DIODE-ZENER;RD8.2MB,7.7-8.7V,200mW,SOT-2	1	SA
....4	D825	0403-001052	DIODE-ZENER;RD8.2MB,7.7-8.7V,200mW,SOT-2	1	SA
....4	D826	0403-001052	DIODE-ZENER;RD8.2MB,7.7-8.7V,200mW,SOT-2	1	SA
....4	D828	0403-001052	DIODE-ZENER;RD8.2MB,7.7-8.7V,200mW,SOT-2	1	SA
....4	D829	0403-001052	DIODE-ZENER;RD8.2MB,7.7-8.7V,200mW,SOT-2	1	SA
....4	D830	0403-001052	DIODE-ZENER;RD8.2MB,7.7-8.7V,200mW,SOT-2	1	SA
....4	D841	0403-001052	DIODE-ZENER;RD8.2MB,7.7-8.7V,200mW,SOT-2	1	SA
....4	D842	0403-001052	DIODE-ZENER;RD8.2MB,7.7-8.7V,200mW,SOT-2	1	SA
....4	D843	0403-001052	DIODE-ZENER;RD8.2MB,7.7-8.7V,200mW,SOT-2	1	SA
....4	D844	0403-001052	DIODE-ZENER;RD8.2MB,7.7-8.7V,200mW,SOT-2	1	SA

Level	Loc. No.	Code No.	Description & Specification	Q'ty	SA/SNA
....4	D503	0403-001425	DIODE-ZENER;BZX84C33,31-35V,350mW,SOT-23	1	SA
....4	D701	0406-001172	DIODE-TVS;CDS3C30GTH,48V,0W,SMD	1	SA
....4	D702	0406-001172	DIODE-TVS;CDS3C30GTH,48V,0W,SMD	1	SA
....4	D201	0407-000123	DIODE-ARRAY;DAN202K,80V,100mA,CA2-3,SOT-	1	SA
....4	D202	0407-000123	DIODE-ARRAY;DAN202K,80V,100mA,CA2-3,SOT-	1	SA
....4	D203	0407-000123	DIODE-ARRAY;DAN202K,80V,100mA,CA2-3,SOT-	1	SA
....4	D204	0407-000123	DIODE-ARRAY;DAN202K,80V,100mA,CA2-3,SOT-	1	SA
....4	D301	0407-000123	DIODE-ARRAY;DAN202K,80V,100mA,CA2-3,SOT-	1	SA
....4	D302	0407-000123	DIODE-ARRAY;DAN202K,80V,100mA,CA2-3,SOT-	1	SA
....4	D401	0407-000123	DIODE-ARRAY;DAN202K,80V,100mA,CA2-3,SOT-	1	SA
....4	D402	0407-000123	DIODE-ARRAY;DAN202K,80V,100mA,CA2-3,SOT-	1	SA
....4	D403	0407-000123	DIODE-ARRAY;DAN202K,80V,100mA,CA2-3,SOT-	1	SA
....4	Q401	0501-000002	TR-SMALL SIGNAL;KSA812,PNP,150MW,SOT-23,	1	SA
....4	Q303	0501-000280	TR-SMALL SIGNAL;KSA1182,PNP,150MW,SOT-23	1	SA
....4	Q1304	0501-000342	TR-SMALL SIGNAL;KSC1623-Y,NPN,200mW,SOT-	1	SA
....4	Q202	0501-000342	TR-SMALL SIGNAL;KSC1623-Y,NPN,200mW,SOT-	1	SA
....4	Q204	0501-000342	TR-SMALL SIGNAL;KSC1623-Y,NPN,200mW,SOT-	1	SA
....4	Q205	0501-000342	TR-SMALL SIGNAL;KSC1623-Y,NPN,200mW,SOT-	1	SA
....4	Q301	0501-000342	TR-SMALL SIGNAL;KSC1623-Y,NPN,200mW,SOT-	1	SA
....4	Q302	0501-000342	TR-SMALL SIGNAL;KSC1623-Y,NPN,200mW,SOT-	1	SA
....4	Q404	0501-000342	TR-SMALL SIGNAL;KSC1623-Y,NPN,200mW,SOT-	1	SA
....4	Q502	0501-000342	TR-SMALL SIGNAL;KSC1623-Y,NPN,200mW,SOT-	1	SA
....4	Q501	0501-000344	TR-SMALL SIGNAL;KSC1623-G,NPN,200mW,SOT-	1	SA
....4	Q101	0501-002080	TR-SMALL SIGNAL;2SC2412K,NPN,200mW,SC-59	1	SA
....4	Q102	0501-002080	TR-SMALL SIGNAL;2SC2412K,NPN,200mW,SC-59	1	SA
....4	Q201	0501-002080	TR-SMALL SIGNAL;2SC2412K,NPN,200mW,SC-59	1	SA
....4	Q402	0501-002080	TR-SMALL SIGNAL;2SC2412K,NPN,200mW,SC-59	1	SA
....4	Q403	0501-002080	TR-SMALL SIGNAL;2SC2412K,NPN,200mW,SC-59	1	SA
....4	Q503	0501-002080	TR-SMALL SIGNAL;2SC2412K,NPN,200mW,SC-59	1	SA
....4	Q701	0501-002080	TR-SMALL SIGNAL;2SC2412K,NPN,200mW,SC-59	1	SA
....4	Q801	0501-002080	TR-SMALL SIGNAL;2SC2412K,NPN,200mW,SC-59	1	SA
....4	Q1305	0504-001129	TR-DIGITAL;KRC104S-I,NPN,200MW,47K/47K,S	1	SA
....4	Q409	0505-000110	FET-SILICON;2N7002,N,60V,115mA,7.5ohm,0.	1	SA
....4	Q409	0505-000110	FET-SILICON;2N7002,N,60V,115mA,7.5ohm,0.	1	SA
....4	Q409	0505-000110	FET-SILICON;2N7002,N,60V,115mA,7.5ohm,0.	1	SA
....4	Q409	0505-000110	FET-SILICON;2N7002,N,60V,115mA,7.5ohm,0.	1	SA
....4	Q409	0505-000110	FET-SILICON;2N7002,N,60V,115mA,7.5ohm,0.	1	SA
....4	Q409	0505-001170	FET-SILICON;SI9933ADY-T1,P,-20V,3.4A,0.0	1	SA
....4	IC104	0801-002095	IC-CMOS LOGIC;74LCX245,TRANSCEIVER,TSSOP	1	SA
....4	IC104	0801-002095	IC-CMOS LOGIC;74LCX245,TRANSCEIVER,TSSOP	1	SA
....4	IC104	0801-002095	IC-CMOS LOGIC;74LCX245,TRANSCEIVER,TSSOP	1	SA
....4	IC104	0801-002633	IC-CMOS LOGIC;NC7WBD3125,2BIT BUS SWITCH	1	SA
....4	IC104	0801-002716	IC-CMOS LOGIC;74LCX157,MULTIPLEXER,SOIC,	1	SA
....4	IC301	1001-000164	IC-ANALOG MULTIPLEX;74HC4052,CMOS,SOP,16	1	SA
....4	IC202	1001-001109	IC-ANALOG SWITCH;FST3125M,BUS SWITCH & C	1	SA
....4	IC806	1001-001109	IC-ANALOG SWITCH;FST3125M,BUS SWITCH & C	1	SA
....4	IC106	1001-001363	IC-VIDEO SWITCH;PI3HDMI412FT,HDMI TMDS S	1	SA
....4	IC107	1002-001399	IC-D/A CONVERTER;PCM1754,24BIT,SSOP,16P,	1	SA
....4	IC701	1006-001266	IC-LINE TRANSCEIVER;SP3232EEY,TSSOP,16P,	1	SA
....4	IC112	1103-000129	IC-EEPROM;24C02,2Kbit,256x8Bit,SOP,8P,5x	1	SA
....4	IC112	1103-000129	IC-EEPROM;24C02,2Kbit,256x8Bit,SOP,8P,5x	1	SA
....4	IC112	1103-000129	IC-EEPROM;24C02,2Kbit,256x8Bit,SOP,8P,5x	1	SA
....4	IC1202	1105-001538	IC-VIDEO RAM;K4D263238,-,128M,4x1Mx32Bit	1	SA
....4	IC113	1105-001571	IC-DRAM;K4D551638F,4Mx16x4Bit,TSOP(II),6	1	SA
....4	IC113	1105-001571	IC-DRAM;K4D551638F,4Mx16x4Bit,TSOP(II),6	1	SA
....4	DU410	1201-000166	IC-OP AMP;LM358,SOP,ST,8P,150MIL,DUAL,10	1	SA
....4	DU410	1201-000541	IC-OP AMP;062,SOP,8P,153MIL,DUAL,6V/mV,P	1	SA
....4	T0085	1201-002136	IC-AUDIO AMP;LM4810,MSOP,8P,3x3mm,DUAL,-	1	SA
....4	T0085	1201-002246	IC-AUDIO AMP;STA323W,SO,36P,15.9x11mm,-,	1	SA
....4	IC206	1203-001559	IC-RESET;DS1834A,SOIC,8P,150MIL,PLASTIC,	1	SA
....4	T0087	1203-001815	IC-POSI.FIXED REG.;78M09,TO-252,3P,-,PLA	1	SA
....4	T0087	1203-001816	IC-POSI.FIXED REG.;78M08,TO-252,3P,-,PLA	1	SA
....4	IC402	1203-001824	IC-VOL. DETECTOR;7042,SOT-89,3P,-,PLASTI	1	SA
....4	T0087	1203-002699	IC-POSI.FIXED REG.;78D05,DPAK,3P,6.6X6.1	1	SA
....4	T0087	1203-002842	IC-POSI.FIXED REG.;AP1117D-33A,TO-252,3P	1	SA
....4	T0087	1203-002844	IC-POSI.FIXED REG.;AP1117D-18A,TO-252-3L	1	SA
....4	T0087	1203-002844	IC-POSI.FIXED REG.;AP1117D-18A,TO-252-3L	1	SA
....4	T0087	1203-002844	IC-POSI.FIXED REG.;AP1117D-18A,TO-252-3L	1	SA
....4	T0087	1203-002974	IC-POSI.FIXED REG.;AP1117D-25A,TO-252,3P	1	SA
....4	T0087	1203-002974	IC-POSI.FIXED REG.;AP1117D-25A,TO-252,3P	1	SA
....4	IC012	1203-002995	IC-POSI.ADJUST REG.;AP1117D-A,TO-252,3P,	1	SA
....4	T0170	1203-003059	IC-SWITCH VOL. REG.;MP1583,SOIC,8P,4.9x3	1	SA

Level	Loc. No.	Code No.	Description & Specification	Q'ty	SA/SNA
....4	T0170	1203-003059	IC-SWITCH VOL. REG.;MP1583,SOIC,8P,4.9x3	1	SA
....4	T0087	1203-003561	IC-POSI.FIXED REG.;NCP551SN15T1G,TSOP-5,	1	SA
....4	T0087	1203-003697	IC-POSI.FIXED REG.;SC1566I5M-2.5TRT,TO-2	1	SA
....4	T0087	1203-003697	IC-POSI.FIXED REG.;SC1566I5M-2.5TRT,TO-2	1	SA
....4	IC302	1204-002471	IC-AUDIO PROCESSOR;STV8258DSX,TQFP,80P,1	1	SA
....4	IC118	1204-002496	IC-VIDEO PROCESS;S4LD158X01,QFP,128P,14x	1	SNA
....4	IC118	1204-002503	IC-VIDEO PROCESS;SVP-PX56-7256,PQFP,256P	1	SNA
....4	IC1301	1204-002534	IC-DECODER;S5H2111,BGA,416P,27x27mm,PLAS	1	SA
....4	IC1302	1205-002250	IC-CLOCK GENERATOR;CY24204-3,TSSOP,16P,1	1	SA
....4	R1519	2007-000040	R-CHIP;150ohm,1%,1/10W,TP,1608	1	SA
....4	R1520	2007-000040	R-CHIP;150ohm,1%,1/10W,TP,1608	1	SA
....4	R1201	2007-000043	R-CHIP;1Kohm,1%,1/10W,TP,1608	1	SA
....4	R1202	2007-000043	R-CHIP;1Kohm,1%,1/10W,TP,1608	1	SA
....4	R1008	2007-000052	R-CHIP;10Kohm,1%,1/10W,TP,1608	1	SA
....4	R228	2007-000052	R-CHIP;10Kohm,1%,1/10W,TP,1608	1	SA
....4	R270	2007-000052	R-CHIP;10Kohm,1%,1/10W,TP,1608	1	SA
....4	R275	2007-000052	R-CHIP;10Kohm,1%,1/10W,TP,1608	1	SA
....4	R501	2007-000060	R-CHIP;100Kohm,1%,1/10W,TP,1608	1	SA
....4	R503	2007-000060	R-CHIP;100Kohm,1%,1/10W,TP,1608	1	SA
....4	R1105	2007-000067	R-CHIP;15Kohm,1%,1/10W,TP,1608	1	SA
....4	R1001	2007-000070	R-CHIP;0ohm,5%,1/10W,TP,1608	1	SA
....4	R1010	2007-000070	R-CHIP;0ohm,5%,1/10W,TP,1608	1	SA
....4	R1011	2007-000070	R-CHIP;0ohm,5%,1/10W,TP,1608	1	SA
....4	R1012	2007-000070	R-CHIP;0ohm,5%,1/10W,TP,1608	1	SA
....4	R1013	2007-000070	R-CHIP;0ohm,5%,1/10W,TP,1608	1	SA
....4	R1014	2007-000070	R-CHIP;0ohm,5%,1/10W,TP,1608	1	SA
....4	R1015	2007-000070	R-CHIP;0ohm,5%,1/10W,TP,1608	1	SA
....4	R1016	2007-000070	R-CHIP;0ohm,5%,1/10W,TP,1608	1	SA
....4	R1017	2007-000070	R-CHIP;0ohm,5%,1/10W,TP,1608	1	SA
....4	R1018	2007-000070	R-CHIP;0ohm,5%,1/10W,TP,1608	1	SA
....4	R1020	2007-000070	R-CHIP;0ohm,5%,1/10W,TP,1608	1	SA
....4	R1021	2007-000070	R-CHIP;0ohm,5%,1/10W,TP,1608	1	SA
....4	R1022	2007-000070	R-CHIP;0ohm,5%,1/10W,TP,1608	1	SA
....4	R1023	2007-000070	R-CHIP;0ohm,5%,1/10W,TP,1608	1	SA
....4	R1024	2007-000070	R-CHIP;0ohm,5%,1/10W,TP,1608	1	SA
....4	R1025	2007-000070	R-CHIP;0ohm,5%,1/10W,TP,1608	1	SA
....4	R1026	2007-000070	R-CHIP;0ohm,5%,1/10W,TP,1608	1	SA
....4	R1027	2007-000070	R-CHIP;0ohm,5%,1/10W,TP,1608	1	SA
....4	R1028	2007-000070	R-CHIP;0ohm,5%,1/10W,TP,1608	1	SA
....4	R1029	2007-000070	R-CHIP;0ohm,5%,1/10W,TP,1608	1	SA
....4	R1030	2007-000070	R-CHIP;0ohm,5%,1/10W,TP,1608	1	SA
....4	R1031	2007-000070	R-CHIP;0ohm,5%,1/10W,TP,1608	1	SA
....4	R1032	2007-000070	R-CHIP;0ohm,5%,1/10W,TP,1608	1	SA
....4	R1033	2007-000070	R-CHIP;0ohm,5%,1/10W,TP,1608	1	SA
....4	R1038	2007-000070	R-CHIP;0ohm,5%,1/10W,TP,1608	1	SA
....4	R1055P	2007-000070	R-CHIP;0ohm,5%,1/10W,TP,1608	1	SA
....4	R1304	2007-000070	R-CHIP;0ohm,5%,1/10W,TP,1608	1	SA
....4	R1326	2007-000070	R-CHIP;0ohm,5%,1/10W,TP,1608	1	SA
....4	R1329	2007-000070	R-CHIP;0ohm,5%,1/10W,TP,1608	1	SA
....4	R1343	2007-000070	R-CHIP;0ohm,5%,1/10W,TP,1608	1	SA
....4	R1345	2007-000070	R-CHIP;0ohm,5%,1/10W,TP,1608	1	SA
....4	R1353	2007-000070	R-CHIP;0ohm,5%,1/10W,TP,1608	1	SA
....4	R1355	2007-000070	R-CHIP;0ohm,5%,1/10W,TP,1608	1	SA
....4	R1357	2007-000070	R-CHIP;0ohm,5%,1/10W,TP,1608	1	SA
....4	R1359	2007-000070	R-CHIP;0ohm,5%,1/10W,TP,1608	1	SA
....4	R1601	2007-000070	R-CHIP;0ohm,5%,1/10W,TP,1608	1	SA
....4	R1602	2007-000070	R-CHIP;0ohm,5%,1/10W,TP,1608	1	SA
....4	R1603	2007-000070	R-CHIP;0ohm,5%,1/10W,TP,1608	1	SA
....4	R1604	2007-000070	R-CHIP;0ohm,5%,1/10W,TP,1608	1	SA
....4	R1619	2007-000070	R-CHIP;0ohm,5%,1/10W,TP,1608	1	SA
....4	R1620	2007-000070	R-CHIP;0ohm,5%,1/10W,TP,1608	1	SA
....4	R1621	2007-000070	R-CHIP;0ohm,5%,1/10W,TP,1608	1	SA
....4	R1627	2007-000070	R-CHIP;0ohm,5%,1/10W,TP,1608	1	SA
....4	R1701	2007-000070	R-CHIP;0ohm,5%,1/10W,TP,1608	1	SA
....4	R235	2007-000070	R-CHIP;0ohm,5%,1/10W,TP,1608	1	SA
....4	R237	2007-000070	R-CHIP;0ohm,5%,1/10W,TP,1608	1	SA
....4	R246	2007-000070	R-CHIP;0ohm,5%,1/10W,TP,1608	1	SA
....4	R247	2007-000070	R-CHIP;0ohm,5%,1/10W,TP,1608	1	SA
....4	R248	2007-000070	R-CHIP;0ohm,5%,1/10W,TP,1608	1	SA
....4	R249	2007-000070	R-CHIP;0ohm,5%,1/10W,TP,1608	1	SA
....4	R259	2007-000070	R-CHIP;0ohm,5%,1/10W,TP,1608	1	SA
....4	R261	2007-000070	R-CHIP;0ohm,5%,1/10W,TP,1608	1	SA

Level	Loc. No.	Code No.	Description & Specification	Q'ty	SA/SNA
....4	R262	2007-000070	R-CHIP;0ohm,5%,1/10W,TP,1608	1	SA
....4	R272	2007-000070	R-CHIP;0ohm,5%,1/10W,TP,1608	1	SA
....4	R329	2007-000070	R-CHIP;0ohm,5%,1/10W,TP,1608	1	SA
....4	R405	2007-000070	R-CHIP;0ohm,5%,1/10W,TP,1608	1	SA
....4	R406	2007-000070	R-CHIP;0ohm,5%,1/10W,TP,1608	1	SA
....4	R506	2007-000070	R-CHIP;0ohm,5%,1/10W,TP,1608	1	SA
....4	R507	2007-000070	R-CHIP;0ohm,5%,1/10W,TP,1608	1	SA
....4	R509	2007-000070	R-CHIP;0ohm,5%,1/10W,TP,1608	1	SA
....4	R511	2007-000070	R-CHIP;0ohm,5%,1/10W,TP,1608	1	SA
....4	R521	2007-000070	R-CHIP;0ohm,5%,1/10W,TP,1608	1	SA
....4	R522	2007-000070	R-CHIP;0ohm,5%,1/10W,TP,1608	1	SA
....4	R701	2007-000070	R-CHIP;0ohm,5%,1/10W,TP,1608	1	SA
....4	R702	2007-000070	R-CHIP;0ohm,5%,1/10W,TP,1608	1	SA
....4	R704	2007-000070	R-CHIP;0ohm,5%,1/10W,TP,1608	1	SA
....4	R705	2007-000070	R-CHIP;0ohm,5%,1/10W,TP,1608	1	SA
....4	R708	2007-000070	R-CHIP;0ohm,5%,1/10W,TP,1608	1	SA
....4	R709	2007-000070	R-CHIP;0ohm,5%,1/10W,TP,1608	1	SA
....4	R722	2007-000070	R-CHIP;0ohm,5%,1/10W,TP,1608	1	SA
....4	R723	2007-000070	R-CHIP;0ohm,5%,1/10W,TP,1608	1	SA
....4	R724	2007-000070	R-CHIP;0ohm,5%,1/10W,TP,1608	1	SA
....4	R807	2007-000070	R-CHIP;0ohm,5%,1/10W,TP,1608	1	SA
....4	R835	2007-000070	R-CHIP;0ohm,5%,1/10W,TP,1608	1	SA
....4	R909	2007-000070	R-CHIP;0ohm,5%,1/10W,TP,1608	1	SA
....4	R922	2007-000070	R-CHIP;0ohm,5%,1/10W,TP,1608	1	SA
....4	R923	2007-000070	R-CHIP;0ohm,5%,1/10W,TP,1608	1	SA
....4	R925	2007-000070	R-CHIP;0ohm,5%,1/10W,TP,1608	1	SA
....4	R929	2007-000070	R-CHIP;0ohm,5%,1/10W,TP,1608	1	SA
....4	R930	2007-000070	R-CHIP;0ohm,5%,1/10W,TP,1608	1	SA
....4	R933	2007-000070	R-CHIP;0ohm,5%,1/10W,TP,1608	1	SA
....4	R935	2007-000070	R-CHIP;0ohm,5%,1/10W,TP,1608	1	SA
....4	R936	2007-000070	R-CHIP;0ohm,5%,1/10W,TP,1608	1	SA
....4	R1040	2007-000071	R-CHIP;22ohm,5%,1/10W,TP,1608	1	SA
....4	R1101	2007-000071	R-CHIP;22ohm,5%,1/10W,TP,1608	1	SA
....4	R1102	2007-000071	R-CHIP;22ohm,5%,1/10W,TP,1608	1	SA
....4	R1204	2007-000071	R-CHIP;22ohm,5%,1/10W,TP,1608	1	SA
....4	R1205	2007-000071	R-CHIP;22ohm,5%,1/10W,TP,1608	1	SA
....4	R1206	2007-000071	R-CHIP;22ohm,5%,1/10W,TP,1608	1	SA
....4	R1207	2007-000071	R-CHIP;22ohm,5%,1/10W,TP,1608	1	SA
....4	R1322	2007-000071	R-CHIP;22ohm,5%,1/10W,TP,1608	1	SA
....4	R1409	2007-000071	R-CHIP;22ohm,5%,1/10W,TP,1608	1	SA
....4	R1410	2007-000071	R-CHIP;22ohm,5%,1/10W,TP,1608	1	SA
....4	R1412	2007-000071	R-CHIP;22ohm,5%,1/10W,TP,1608	1	SA
....4	R1414	2007-000071	R-CHIP;22ohm,5%,1/10W,TP,1608	1	SA
....4	R253	2007-000071	R-CHIP;22ohm,5%,1/10W,TP,1608	1	SA
....4	R323	2007-000071	R-CHIP;22ohm,5%,1/10W,TP,1608	1	SA
....4	R810	2007-000071	R-CHIP;22ohm,5%,1/10W,TP,1608	1	SA
....4	R814	2007-000071	R-CHIP;22ohm,5%,1/10W,TP,1608	1	SA
....4	R817	2007-000071	R-CHIP;22ohm,5%,1/10W,TP,1608	1	SA
....4	R822	2007-000071	R-CHIP;22ohm,5%,1/10W,TP,1608	1	SA
....4	R836	2007-000071	R-CHIP;22ohm,5%,1/10W,TP,1608	1	SA
....4	R837	2007-000071	R-CHIP;22ohm,5%,1/10W,TP,1608	1	SA
....4	R874	2007-000071	R-CHIP;22ohm,5%,1/10W,TP,1608	1	SA
....4	R876	2007-000071	R-CHIP;22ohm,5%,1/10W,TP,1608	1	SA
....4	R878	2007-000071	R-CHIP;22ohm,5%,1/10W,TP,1608	1	SA
....4	R879	2007-000071	R-CHIP;22ohm,5%,1/10W,TP,1608	1	SA
....4	R882	2007-000071	R-CHIP;22ohm,5%,1/10W,TP,1608	1	SA
....4	R883	2007-000071	R-CHIP;22ohm,5%,1/10W,TP,1608	1	SA
....4	R884	2007-000071	R-CHIP;22ohm,5%,1/10W,TP,1608	1	SA
....4	R885	2007-000071	R-CHIP;22ohm,5%,1/10W,TP,1608	1	SA
....4	R886	2007-000071	R-CHIP;22ohm,5%,1/10W,TP,1608	1	SA
....4	R887	2007-000071	R-CHIP;22ohm,5%,1/10W,TP,1608	1	SA
....4	R888	2007-000071	R-CHIP;22ohm,5%,1/10W,TP,1608	1	SA
....4	R889	2007-000071	R-CHIP;22ohm,5%,1/10W,TP,1608	1	SA
....4	R890	2007-000071	R-CHIP;22ohm,5%,1/10W,TP,1608	1	SA
....4	R891	2007-000071	R-CHIP;22ohm,5%,1/10W,TP,1608	1	SA
....4	R892	2007-000071	R-CHIP;22ohm,5%,1/10W,TP,1608	1	SA
....4	R893	2007-000071	R-CHIP;22ohm,5%,1/10W,TP,1608	1	SA
....4	R1379	2007-000072	R-CHIP;47ohm,5%,1/10W,TP,1608	1	SA
....4	R1380	2007-000072	R-CHIP;47ohm,5%,1/10W,TP,1608	1	SA
....4	R1413	2007-000072	R-CHIP;47ohm,5%,1/10W,TP,1608	1	SA
....4	R1415	2007-000072	R-CHIP;47ohm,5%,1/10W,TP,1608	1	SA
....4	R1416	2007-000072	R-CHIP;47ohm,5%,1/10W,TP,1608	1	SA

Level	Loc. No.	Code No.	Description & Specification	Q'ty	SA/SNA
....4	R1417	2007-000072	R-CHIP;47ohm,5%,1/10W,TP,1608	1	SA
....4	R711	2007-000072	R-CHIP;47ohm,5%,1/10W,TP,1608	1	SA
....4	R712	2007-000072	R-CHIP;47ohm,5%,1/10W,TP,1608	1	SA
....4	R803	2007-000072	R-CHIP;47ohm,5%,1/10W,TP,1608	1	SA
....4	R804	2007-000072	R-CHIP;47ohm,5%,1/10W,TP,1608	1	SA
....4	R816	2007-000072	R-CHIP;47ohm,5%,1/10W,TP,1608	1	SA
....4	R818	2007-000072	R-CHIP;47ohm,5%,1/10W,TP,1608	1	SA
....4	R831	2007-000072	R-CHIP;47ohm,5%,1/10W,TP,1608	1	SA
....4	R832	2007-000072	R-CHIP;47ohm,5%,1/10W,TP,1608	1	SA
....4	R1019	2007-000074	R-CHIP;100ohm,5%,1/10W,TP,1608	1	SA
....4	R1034	2007-000074	R-CHIP;100ohm,5%,1/10W,TP,1608	1	SA
....4	R1035	2007-000074	R-CHIP;100ohm,5%,1/10W,TP,1608	1	SA
....4	R1036	2007-000074	R-CHIP;100ohm,5%,1/10W,TP,1608	1	SA
....4	R1037	2007-000074	R-CHIP;100ohm,5%,1/10W,TP,1608	1	SA
....4	R1039	2007-000074	R-CHIP;100ohm,5%,1/10W,TP,1608	1	SA
....4	R1044	2007-000074	R-CHIP;100ohm,5%,1/10W,TP,1608	1	SA
....4	R1050	2007-000074	R-CHIP;100ohm,5%,1/10W,TP,1608	1	SA
....4	R1058	2007-000074	R-CHIP;100ohm,5%,1/10W,TP,1608	1	SA
....4	R1302	2007-000074	R-CHIP;100ohm,5%,1/10W,TP,1608	1	SA
....4	R1303	2007-000074	R-CHIP;100ohm,5%,1/10W,TP,1608	1	SA
....4	R1305	2007-000074	R-CHIP;100ohm,5%,1/10W,TP,1608	1	SA
....4	R1306	2007-000074	R-CHIP;100ohm,5%,1/10W,TP,1608	1	SA
....4	R1307	2007-000074	R-CHIP;100ohm,5%,1/10W,TP,1608	1	SA
....4	R1308	2007-000074	R-CHIP;100ohm,5%,1/10W,TP,1608	1	SA
....4	R1309	2007-000074	R-CHIP;100ohm,5%,1/10W,TP,1608	1	SA
....4	R1310	2007-000074	R-CHIP;100ohm,5%,1/10W,TP,1608	1	SA
....4	R1311	2007-000074	R-CHIP;100ohm,5%,1/10W,TP,1608	1	SA
....4	R1313	2007-000074	R-CHIP;100ohm,5%,1/10W,TP,1608	1	SA
....4	R1314	2007-000074	R-CHIP;100ohm,5%,1/10W,TP,1608	1	SA
....4	R1315	2007-000074	R-CHIP;100ohm,5%,1/10W,TP,1608	1	SA
....4	R1316	2007-000074	R-CHIP;100ohm,5%,1/10W,TP,1608	1	SA
....4	R1317	2007-000074	R-CHIP;100ohm,5%,1/10W,TP,1608	1	SA
....4	R1327	2007-000074	R-CHIP;100ohm,5%,1/10W,TP,1608	1	SA
....4	R1328	2007-000074	R-CHIP;100ohm,5%,1/10W,TP,1608	1	SA
....4	R1330	2007-000074	R-CHIP;100ohm,5%,1/10W,TP,1608	1	SA
....4	R1331	2007-000074	R-CHIP;100ohm,5%,1/10W,TP,1608	1	SA
....4	R1332	2007-000074	R-CHIP;100ohm,5%,1/10W,TP,1608	1	SA
....4	R1333	2007-000074	R-CHIP;100ohm,5%,1/10W,TP,1608	1	SA
....4	R1336	2007-000074	R-CHIP;100ohm,5%,1/10W,TP,1608	1	SA
....4	R1337	2007-000074	R-CHIP;100ohm,5%,1/10W,TP,1608	1	SA
....4	R1338	2007-000074	R-CHIP;100ohm,5%,1/10W,TP,1608	1	SA
....4	R1339	2007-000074	R-CHIP;100ohm,5%,1/10W,TP,1608	1	SA
....4	R1341	2007-000074	R-CHIP;100ohm,5%,1/10W,TP,1608	1	SA
....4	R1342	2007-000074	R-CHIP;100ohm,5%,1/10W,TP,1608	1	SA
....4	R1346	2007-000074	R-CHIP;100ohm,5%,1/10W,TP,1608	1	SA
....4	R1347	2007-000074	R-CHIP;100ohm,5%,1/10W,TP,1608	1	SA
....4	R1348	2007-000074	R-CHIP;100ohm,5%,1/10W,TP,1608	1	SA
....4	R1349	2007-000074	R-CHIP;100ohm,5%,1/10W,TP,1608	1	SA
....4	R1350	2007-000074	R-CHIP;100ohm,5%,1/10W,TP,1608	1	SA
....4	R1381	2007-000074	R-CHIP;100ohm,5%,1/10W,TP,1608	1	SA
....4	R1382	2007-000074	R-CHIP;100ohm,5%,1/10W,TP,1608	1	SA
....4	R1383	2007-000074	R-CHIP;100ohm,5%,1/10W,TP,1608	1	SA
....4	R1384	2007-000074	R-CHIP;100ohm,5%,1/10W,TP,1608	1	SA
....4	R1401	2007-000074	R-CHIP;100ohm,5%,1/10W,TP,1608	1	SA
....4	R1402	2007-000074	R-CHIP;100ohm,5%,1/10W,TP,1608	1	SA
....4	R1403	2007-000074	R-CHIP;100ohm,5%,1/10W,TP,1608	1	SA
....4	R1404	2007-000074	R-CHIP;100ohm,5%,1/10W,TP,1608	1	SA
....4	R1405	2007-000074	R-CHIP;100ohm,5%,1/10W,TP,1608	1	SA
....4	R1406	2007-000074	R-CHIP;100ohm,5%,1/10W,TP,1608	1	SA
....4	R1407	2007-000074	R-CHIP;100ohm,5%,1/10W,TP,1608	1	SA
....4	R1408	2007-000074	R-CHIP;100ohm,5%,1/10W,TP,1608	1	SA
....4	R1612	2007-000074	R-CHIP;100ohm,5%,1/10W,TP,1608	1	SA
....4	R1628	2007-000074	R-CHIP;100ohm,5%,1/10W,TP,1608	1	SA
....4	R223	2007-000074	R-CHIP;100ohm,5%,1/10W,TP,1608	1	SA
....4	R225	2007-000074	R-CHIP;100ohm,5%,1/10W,TP,1608	1	SA
....4	R226	2007-000074	R-CHIP;100ohm,5%,1/10W,TP,1608	1	SA
....4	R234	2007-000074	R-CHIP;100ohm,5%,1/10W,TP,1608	1	SA
....4	R236	2007-000074	R-CHIP;100ohm,5%,1/10W,TP,1608	1	SA
....4	R238	2007-000074	R-CHIP;100ohm,5%,1/10W,TP,1608	1	SA
....4	R239	2007-000074	R-CHIP;100ohm,5%,1/10W,TP,1608	1	SA
....4	R240	2007-000074	R-CHIP;100ohm,5%,1/10W,TP,1608	1	SA
....4	R241	2007-000074	R-CHIP;100ohm,5%,1/10W,TP,1608	1	SA

Level	Loc. No.	Code No.	Description & Specification	Q'ty	SA/SNA
....4	R242	2007-000074	R-CHIP;100ohm,5%,1/10W,TP,1608	1	SA
....4	R243	2007-000074	R-CHIP;100ohm,5%,1/10W,TP,1608	1	SA
....4	R244	2007-000074	R-CHIP;100ohm,5%,1/10W,TP,1608	1	SA
....4	R250	2007-000074	R-CHIP;100ohm,5%,1/10W,TP,1608	1	SA
....4	R251	2007-000074	R-CHIP;100ohm,5%,1/10W,TP,1608	1	SA
....4	R252	2007-000074	R-CHIP;100ohm,5%,1/10W,TP,1608	1	SA
....4	R254	2007-000074	R-CHIP;100ohm,5%,1/10W,TP,1608	1	SA
....4	R255	2007-000074	R-CHIP;100ohm,5%,1/10W,TP,1608	1	SA
....4	R256	2007-000074	R-CHIP;100ohm,5%,1/10W,TP,1608	1	SA
....4	R258	2007-000074	R-CHIP;100ohm,5%,1/10W,TP,1608	1	SA
....4	R320	2007-000074	R-CHIP;100ohm,5%,1/10W,TP,1608	1	SA
....4	R321	2007-000074	R-CHIP;100ohm,5%,1/10W,TP,1608	1	SA
....4	R325	2007-000074	R-CHIP;100ohm,5%,1/10W,TP,1608	1	SA
....4	R326	2007-000074	R-CHIP;100ohm,5%,1/10W,TP,1608	1	SA
....4	R327	2007-000074	R-CHIP;100ohm,5%,1/10W,TP,1608	1	SA
....4	R407	2007-000074	R-CHIP;100ohm,5%,1/10W,TP,1608	1	SA
....4	R502	2007-000074	R-CHIP;100ohm,5%,1/10W,TP,1608	1	SA
....4	R510	2007-000074	R-CHIP;100ohm,5%,1/10W,TP,1608	1	SA
....4	R601	2007-000074	R-CHIP;100ohm,5%,1/10W,TP,1608	1	SA
....4	R603	2007-000074	R-CHIP;100ohm,5%,1/10W,TP,1608	1	SA
....4	R614	2007-000074	R-CHIP;100ohm,5%,1/10W,TP,1608	1	SA
....4	R615	2007-000074	R-CHIP;100ohm,5%,1/10W,TP,1608	1	SA
....4	R616	2007-000074	R-CHIP;100ohm,5%,1/10W,TP,1608	1	SA
....4	R619	2007-000074	R-CHIP;100ohm,5%,1/10W,TP,1608	1	SA
....4	R620	2007-000074	R-CHIP;100ohm,5%,1/10W,TP,1608	1	SA
....4	R703	2007-000074	R-CHIP;100ohm,5%,1/10W,TP,1608	1	SA
....4	R706	2007-000074	R-CHIP;100ohm,5%,1/10W,TP,1608	1	SA
....4	R707	2007-000074	R-CHIP;100ohm,5%,1/10W,TP,1608	1	SA
....4	R710	2007-000074	R-CHIP;100ohm,5%,1/10W,TP,1608	1	SA
....4	R720	2007-000074	R-CHIP;100ohm,5%,1/10W,TP,1608	1	SA
....4	R721	2007-000074	R-CHIP;100ohm,5%,1/10W,TP,1608	1	SA
....4	R821	2007-000074	R-CHIP;100ohm,5%,1/10W,TP,1608	1	SA
....4	R823	2007-000074	R-CHIP;100ohm,5%,1/10W,TP,1608	1	SA
....4	R824	2007-000074	R-CHIP;100ohm,5%,1/10W,TP,1608	1	SA
....4	R825	2007-000074	R-CHIP;100ohm,5%,1/10W,TP,1608	1	SA
....4	R826	2007-000074	R-CHIP;100ohm,5%,1/10W,TP,1608	1	SA
....4	R1056	2007-000075	R-CHIP;220ohm,5%,1/10W,TP,1608	1	SA
....4	R515	2007-000076	R-CHIP;330ohm,5%,1/10W,TP,1608	1	SA
....4	R1046	2007-000077	R-CHIP;470ohm,5%,1/10W,TP,1608	1	SA
....4	R1434	2007-000077	R-CHIP;470ohm,5%,1/10W,TP,1608	1	SA
....4	R1435	2007-000077	R-CHIP;470ohm,5%,1/10W,TP,1608	1	SA
....4	R274	2007-000077	R-CHIP;470ohm,5%,1/10W,TP,1608	1	SA
....4	R609	2007-000077	R-CHIP;470ohm,5%,1/10W,TP,1608	1	SA
....4	R610	2007-000077	R-CHIP;470ohm,5%,1/10W,TP,1608	1	SA
....4	R612	2007-000077	R-CHIP;470ohm,5%,1/10W,TP,1608	1	SA
....4	R613	2007-000077	R-CHIP;470ohm,5%,1/10W,TP,1608	1	SA
....4	R827	2007-000077	R-CHIP;470ohm,5%,1/10W,TP,1608	1	SA
....4	R828	2007-000077	R-CHIP;470ohm,5%,1/10W,TP,1608	1	SA
....4	R859	2007-000077	R-CHIP;470ohm,5%,1/10W,TP,1608	1	SA
....4	R860	2007-000077	R-CHIP;470ohm,5%,1/10W,TP,1608	1	SA
....4	R1002	2007-000078	R-CHIP;1Kohm,5%,1/10W,TP,1608	1	SA
....4	R1043	2007-000078	R-CHIP;1Kohm,5%,1/10W,TP,1608	1	SA
....4	R1051	2007-000078	R-CHIP;1Kohm,5%,1/10W,TP,1608	1	SA
....4	R112	2007-000078	R-CHIP;1Kohm,5%,1/10W,TP,1608	1	SA
....4	R1312	2007-000078	R-CHIP;1Kohm,5%,1/10W,TP,1608	1	SA
....4	R1323	2007-000078	R-CHIP;1Kohm,5%,1/10W,TP,1608	1	SA
....4	R1340	2007-000078	R-CHIP;1Kohm,5%,1/10W,TP,1608	1	SA
....4	R233	2007-000078	R-CHIP;1Kohm,5%,1/10W,TP,1608	1	SA
....4	R266	2007-000078	R-CHIP;1Kohm,5%,1/10W,TP,1608	1	SA
....4	R408	2007-000078	R-CHIP;1Kohm,5%,1/10W,TP,1608	1	SA
....4	R415	2007-000078	R-CHIP;1Kohm,5%,1/10W,TP,1608	1	SA
....4	R416	2007-000078	R-CHIP;1Kohm,5%,1/10W,TP,1608	1	SA
....4	R508	2007-000078	R-CHIP;1Kohm,5%,1/10W,TP,1608	1	SA
....4	R524	2007-000078	R-CHIP;1Kohm,5%,1/10W,TP,1608	1	SA
....4	R847	2007-000078	R-CHIP;1Kohm,5%,1/10W,TP,1608	1	SA
....4	R924	2007-000078	R-CHIP;1Kohm,5%,1/10W,TP,1608	1	SA
....4	R849	2007-000079	R-CHIP;1.8Kohm,5%,1/10W,TP,1608	1	SA
....4	R1048	2007-000082	R-CHIP;3.3Kohm,5%,1/10W,TP,1608	1	SA
....4	R1049	2007-000082	R-CHIP;3.3Kohm,5%,1/10W,TP,1608	1	SA
....4	R1045	2007-000084	R-CHIP;4.7Kohm,5%,1/10W,TP,1608	1	SA
....4	R113	2007-000084	R-CHIP;4.7Kohm,5%,1/10W,TP,1608	1	SA
....4	R1301	2007-000084	R-CHIP;4.7Kohm,5%,1/10W,TP,1608	1	SA

Level	Loc. No.	Code No.	Description & Specification	Q'ty	SA/SNA
....4	R1325	2007-000084	R-CHIP;4.7Kohm,5%,1/10W,TP,1608	1	SA
....4	R1361	2007-000084	R-CHIP;4.7Kohm,5%,1/10W,TP,1608	1	SA
....4	R1362	2007-000084	R-CHIP;4.7Kohm,5%,1/10W,TP,1608	1	SA
....4	R1363	2007-000084	R-CHIP;4.7Kohm,5%,1/10W,TP,1608	1	SA
....4	R1364	2007-000084	R-CHIP;4.7Kohm,5%,1/10W,TP,1608	1	SA
....4	R1365	2007-000084	R-CHIP;4.7Kohm,5%,1/10W,TP,1608	1	SA
....4	R1366	2007-000084	R-CHIP;4.7Kohm,5%,1/10W,TP,1608	1	SA
....4	R1367	2007-000084	R-CHIP;4.7Kohm,5%,1/10W,TP,1608	1	SA
....4	R1368	2007-000084	R-CHIP;4.7Kohm,5%,1/10W,TP,1608	1	SA
....4	R1369	2007-000084	R-CHIP;4.7Kohm,5%,1/10W,TP,1608	1	SA
....4	R1370	2007-000084	R-CHIP;4.7Kohm,5%,1/10W,TP,1608	1	SA
....4	R1371	2007-000084	R-CHIP;4.7Kohm,5%,1/10W,TP,1608	1	SA
....4	R1372	2007-000084	R-CHIP;4.7Kohm,5%,1/10W,TP,1608	1	SA
....4	R1373	2007-000084	R-CHIP;4.7Kohm,5%,1/10W,TP,1608	1	SA
....4	R1374	2007-000084	R-CHIP;4.7Kohm,5%,1/10W,TP,1608	1	SA
....4	R1375	2007-000084	R-CHIP;4.7Kohm,5%,1/10W,TP,1608	1	SA
....4	R1386	2007-000084	R-CHIP;4.7Kohm,5%,1/10W,TP,1608	1	SA
....4	R1387	2007-000084	R-CHIP;4.7Kohm,5%,1/10W,TP,1608	1	SA
....4	R1388	2007-000084	R-CHIP;4.7Kohm,5%,1/10W,TP,1608	1	SA
....4	R1389	2007-000084	R-CHIP;4.7Kohm,5%,1/10W,TP,1608	1	SA
....4	R1390	2007-000084	R-CHIP;4.7Kohm,5%,1/10W,TP,1608	1	SA
....4	R1418	2007-000084	R-CHIP;4.7Kohm,5%,1/10W,TP,1608	1	SA
....4	R1419	2007-000084	R-CHIP;4.7Kohm,5%,1/10W,TP,1608	1	SA
....4	R1420	2007-000084	R-CHIP;4.7Kohm,5%,1/10W,TP,1608	1	SA
....4	R1421	2007-000084	R-CHIP;4.7Kohm,5%,1/10W,TP,1608	1	SA
....4	R1422	2007-000084	R-CHIP;4.7Kohm,5%,1/10W,TP,1608	1	SA
....4	R1423	2007-000084	R-CHIP;4.7Kohm,5%,1/10W,TP,1608	1	SA
....4	R1424	2007-000084	R-CHIP;4.7Kohm,5%,1/10W,TP,1608	1	SA
....4	R1605	2007-000084	R-CHIP;4.7Kohm,5%,1/10W,TP,1608	1	SA
....4	R1607	2007-000084	R-CHIP;4.7Kohm,5%,1/10W,TP,1608	1	SA
....4	R1609	2007-000084	R-CHIP;4.7Kohm,5%,1/10W,TP,1608	1	SA
....4	R1613	2007-000084	R-CHIP;4.7Kohm,5%,1/10W,TP,1608	1	SA
....4	R1622	2007-000084	R-CHIP;4.7Kohm,5%,1/10W,TP,1608	1	SA
....4	R1623	2007-000084	R-CHIP;4.7Kohm,5%,1/10W,TP,1608	1	SA
....4	R1624	2007-000084	R-CHIP;4.7Kohm,5%,1/10W,TP,1608	1	SA
....4	R1625	2007-000084	R-CHIP;4.7Kohm,5%,1/10W,TP,1608	1	SA
....4	R1626	2007-000084	R-CHIP;4.7Kohm,5%,1/10W,TP,1608	1	SA
....4	R257	2007-000084	R-CHIP;4.7Kohm,5%,1/10W,TP,1608	1	SA
....4	R263	2007-000084	R-CHIP;4.7Kohm,5%,1/10W,TP,1608	1	SA
....4	R267	2007-000084	R-CHIP;4.7Kohm,5%,1/10W,TP,1608	1	SA
....4	R268	2007-000084	R-CHIP;4.7Kohm,5%,1/10W,TP,1608	1	SA
....4	R322	2007-000084	R-CHIP;4.7Kohm,5%,1/10W,TP,1608	1	SA
....4	R328	2007-000084	R-CHIP;4.7Kohm,5%,1/10W,TP,1608	1	SA
....4	R414	2007-000084	R-CHIP;4.7Kohm,5%,1/10W,TP,1608	1	SA
....4	R523	2007-000084	R-CHIP;4.7Kohm,5%,1/10W,TP,1608	1	SA
....4	R719	2007-000084	R-CHIP;4.7Kohm,5%,1/10W,TP,1608	1	SA
....4	R916	2007-000084	R-CHIP;4.7Kohm,5%,1/10W,TP,1608	1	SA
....4	R919	2007-000084	R-CHIP;4.7Kohm,5%,1/10W,TP,1608	1	SA
....4	R921	2007-000084	R-CHIP;4.7Kohm,5%,1/10W,TP,1608	1	SA
....4	R926	2007-000084	R-CHIP;4.7Kohm,5%,1/10W,TP,1608	1	SA
....4	R927	2007-000084	R-CHIP;4.7Kohm,5%,1/10W,TP,1608	1	SA
....4	R404	2007-000087	R-CHIP;6.8Kohm,5%,1/10W,TP,1608	1	SA
....4	R102	2007-000090	R-CHIP;10Kohm,5%,1/10W,TP,1608	1	SA
....4	R103	2007-000090	R-CHIP;10Kohm,5%,1/10W,TP,1608	1	SA
....4	R106	2007-000090	R-CHIP;10Kohm,5%,1/10W,TP,1608	1	SA
....4	R107	2007-000090	R-CHIP;10Kohm,5%,1/10W,TP,1608	1	SA
....4	R1104	2007-000090	R-CHIP;10Kohm,5%,1/10W,TP,1608	1	SA
....4	R1334	2007-000090	R-CHIP;10Kohm,5%,1/10W,TP,1608	1	SA
....4	R1335	2007-000090	R-CHIP;10Kohm,5%,1/10W,TP,1608	1	SA
....4	R1376	2007-000090	R-CHIP;10Kohm,5%,1/10W,TP,1608	1	SA
....4	R1377	2007-000090	R-CHIP;10Kohm,5%,1/10W,TP,1608	1	SA
....4	R1378	2007-000090	R-CHIP;10Kohm,5%,1/10W,TP,1608	1	SA
....4	R1432	2007-000090	R-CHIP;10Kohm,5%,1/10W,TP,1608	1	SA
....4	R1433	2007-000090	R-CHIP;10Kohm,5%,1/10W,TP,1608	1	SA
....4	R1608	2007-000090	R-CHIP;10Kohm,5%,1/10W,TP,1608	1	SA
....4	R201	2007-000090	R-CHIP;10Kohm,5%,1/10W,TP,1608	1	SA
....4	R202	2007-000090	R-CHIP;10Kohm,5%,1/10W,TP,1608	1	SA
....4	R203	2007-000090	R-CHIP;10Kohm,5%,1/10W,TP,1608	1	SA
....4	R204	2007-000090	R-CHIP;10Kohm,5%,1/10W,TP,1608	1	SA
....4	R205	2007-000090	R-CHIP;10Kohm,5%,1/10W,TP,1608	1	SA
....4	R208	2007-000090	R-CHIP;10Kohm,5%,1/10W,TP,1608	1	SA
....4	R210	2007-000090	R-CHIP;10Kohm,5%,1/10W,TP,1608	1	SA

Level	Loc. No.	Code No.	Description & Specification	Q'ty	SA/SNA
....4	R212	2007-000090	R-CHIP;10Kohm,5%,1/10W,TP,1608	1	SA
....4	R213	2007-000090	R-CHIP;10Kohm,5%,1/10W,TP,1608	1	SA
....4	R214	2007-000090	R-CHIP;10Kohm,5%,1/10W,TP,1608	1	SA
....4	R215	2007-000090	R-CHIP;10Kohm,5%,1/10W,TP,1608	1	SA
....4	R217	2007-000090	R-CHIP;10Kohm,5%,1/10W,TP,1608	1	SA
....4	R218	2007-000090	R-CHIP;10Kohm,5%,1/10W,TP,1608	1	SA
....4	R219	2007-000090	R-CHIP;10Kohm,5%,1/10W,TP,1608	1	SA
....4	R220	2007-000090	R-CHIP;10Kohm,5%,1/10W,TP,1608	1	SA
....4	R221	2007-000090	R-CHIP;10Kohm,5%,1/10W,TP,1608	1	SA
....4	R222	2007-000090	R-CHIP;10Kohm,5%,1/10W,TP,1608	1	SA
....4	R227	2007-000090	R-CHIP;10Kohm,5%,1/10W,TP,1608	1	SA
....4	R230	2007-000090	R-CHIP;10Kohm,5%,1/10W,TP,1608	1	SA
....4	R231	2007-000090	R-CHIP;10Kohm,5%,1/10W,TP,1608	1	SA
....4	R260	2007-000090	R-CHIP;10Kohm,5%,1/10W,TP,1608	1	SA
....4	R265	2007-000090	R-CHIP;10Kohm,5%,1/10W,TP,1608	1	SA
....4	R271	2007-000090	R-CHIP;10Kohm,5%,1/10W,TP,1608	1	SA
....4	R273	2007-000090	R-CHIP;10Kohm,5%,1/10W,TP,1608	1	SA
....4	R309	2007-000090	R-CHIP;10Kohm,5%,1/10W,TP,1608	1	SA
....4	R310	2007-000090	R-CHIP;10Kohm,5%,1/10W,TP,1608	1	SA
....4	R331	2007-000090	R-CHIP;10Kohm,5%,1/10W,TP,1608	1	SA
....4	R412	2007-000090	R-CHIP;10Kohm,5%,1/10W,TP,1608	1	SA
....4	R419	2007-000090	R-CHIP;10Kohm,5%,1/10W,TP,1608	1	SA
....4	R801	2007-000090	R-CHIP;10Kohm,5%,1/10W,TP,1608	1	SA
....4	R802	2007-000090	R-CHIP;10Kohm,5%,1/10W,TP,1608	1	SA
....4	R806	2007-000090	R-CHIP;10Kohm,5%,1/10W,TP,1608	1	SA
....4	R808	2007-000090	R-CHIP;10Kohm,5%,1/10W,TP,1608	1	SA
....4	R809	2007-000090	R-CHIP;10Kohm,5%,1/10W,TP,1608	1	SA
....4	R829	2007-000090	R-CHIP;10Kohm,5%,1/10W,TP,1608	1	SA
....4	R830	2007-000090	R-CHIP;10Kohm,5%,1/10W,TP,1608	1	SA
....4	R834	2007-000090	R-CHIP;10Kohm,5%,1/10W,TP,1608	1	SA
....4	R913	2007-000090	R-CHIP;10Kohm,5%,1/10W,TP,1608	1	SA
....4	R915	2007-000090	R-CHIP;10Kohm,5%,1/10W,TP,1608	1	SA
....4	R928	2007-000090	R-CHIP;10Kohm,5%,1/10W,TP,1608	1	SA
....4	R934	2007-000090	R-CHIP;10Kohm,5%,1/10W,TP,1608	1	SA
....4	R937	2007-000090	R-CHIP;10Kohm,5%,1/10W,TP,1608	1	SA
....4	R108	2007-000092	R-CHIP;15Kohm,5%,1/10W,TP,1608	1	SA
....4	R110	2007-000092	R-CHIP;15Kohm,5%,1/10W,TP,1608	1	SA
....4	R1320	2007-000092	R-CHIP;15Kohm,5%,1/10W,TP,1608	1	SA
....4	R1321	2007-000092	R-CHIP;15Kohm,5%,1/10W,TP,1608	1	SA
....4	R333	2007-000093	R-CHIP;20Kohm,5%,1/10W,TP,1608	1	SA
....4	R334	2007-000093	R-CHIP;20Kohm,5%,1/10W,TP,1608	1	SA
....4	R848	2007-000093	R-CHIP;20Kohm,5%,1/10W,TP,1608	1	SA
....4	R517	2007-000094	R-CHIP;22Kohm,5%,1/10W,TP,1608	1	SA
....4	R1425	2007-000097	R-CHIP;47Kohm,5%,1/10W,TP,1608	1	SA
....4	R245	2007-000097	R-CHIP;47Kohm,5%,1/10W,TP,1608	1	SA
....4	R301	2007-000100	R-CHIP;68Kohm,5%,1/10W,TP,1608	1	SA
....4	R302	2007-000100	R-CHIP;68Kohm,5%,1/10W,TP,1608	1	SA
....4	R303	2007-000100	R-CHIP;68Kohm,5%,1/10W,TP,1608	1	SA
....4	R304	2007-000100	R-CHIP;68Kohm,5%,1/10W,TP,1608	1	SA
....4	R305	2007-000100	R-CHIP;68Kohm,5%,1/10W,TP,1608	1	SA
....4	R306	2007-000100	R-CHIP;68Kohm,5%,1/10W,TP,1608	1	SA
....4	R307	2007-000100	R-CHIP;68Kohm,5%,1/10W,TP,1608	1	SA
....4	R308	2007-000100	R-CHIP;68Kohm,5%,1/10W,TP,1608	1	SA
....4	R311	2007-000100	R-CHIP;68Kohm,5%,1/10W,TP,1608	1	SA
....4	R312	2007-000100	R-CHIP;68Kohm,5%,1/10W,TP,1608	1	SA
....4	R313	2007-000100	R-CHIP;68Kohm,5%,1/10W,TP,1608	1	SA
....4	R314	2007-000100	R-CHIP;68Kohm,5%,1/10W,TP,1608	1	SA
....4	R315	2007-000100	R-CHIP;68Kohm,5%,1/10W,TP,1608	1	SA
....4	R316	2007-000100	R-CHIP;68Kohm,5%,1/10W,TP,1608	1	SA
....4	R317	2007-000100	R-CHIP;68Kohm,5%,1/10W,TP,1608	1	SA
....4	R318	2007-000100	R-CHIP;68Kohm,5%,1/10W,TP,1608	1	SA
....4	R101	2007-000102	R-CHIP;100Kohm,5%,1/10W,TP,1608	1	SA
....4	R330	2007-000102	R-CHIP;100Kohm,5%,1/10W,TP,1608	1	SA
....4	R332	2007-000102	R-CHIP;100Kohm,5%,1/10W,TP,1608	1	SA
....4	R335	2007-000102	R-CHIP;100Kohm,5%,1/10W,TP,1608	1	SA
....4	R336	2007-000102	R-CHIP;100Kohm,5%,1/10W,TP,1608	1	SA
....4	R418	2007-000102	R-CHIP;100Kohm,5%,1/10W,TP,1608	1	SA
....4	R512	2007-000102	R-CHIP;100Kohm,5%,1/10W,TP,1608	1	SA
....4	R520	2007-000102	R-CHIP;100Kohm,5%,1/10W,TP,1608	1	SA
....4	R621	2007-000102	R-CHIP;100Kohm,5%,1/10W,TP,1608	1	SA
....4	R622	2007-000102	R-CHIP;100Kohm,5%,1/10W,TP,1608	1	SA
....4	R504	2007-000106	R-CHIP;220Kohm,5%,1/10W,TP,1608	1	SA

Level	Loc. No.	Code No.	Description & Specification	Q'ty	SA/SNA
....4	R505	2007-000106	R-CHIP;220Kohm,5%,1/10W,TP,1608	1	SA
....4	R1324	2007-000113	R-CHIP;33ohm,5%,1/10W,TP,1608	1	SA
....4	R1344	2007-000113	R-CHIP;33ohm,5%,1/10W,TP,1608	1	SA
....4	R1351	2007-000113	R-CHIP;33ohm,5%,1/10W,TP,1608	1	SA
....4	R1352	2007-000113	R-CHIP;33ohm,5%,1/10W,TP,1608	1	SA
....4	R1354	2007-000113	R-CHIP;33ohm,5%,1/10W,TP,1608	1	SA
....4	R1356	2007-000113	R-CHIP;33ohm,5%,1/10W,TP,1608	1	SA
....4	R1358	2007-000113	R-CHIP;33ohm,5%,1/10W,TP,1608	1	SA
....4	R1385	2007-000113	R-CHIP;33ohm,5%,1/10W,TP,1608	1	SA
....4	R1501	2007-000113	R-CHIP;33ohm,5%,1/10W,TP,1608	1	SA
....4	R1502	2007-000113	R-CHIP;33ohm,5%,1/10W,TP,1608	1	SA
....4	R1503	2007-000113	R-CHIP;33ohm,5%,1/10W,TP,1608	1	SA
....4	R1504	2007-000113	R-CHIP;33ohm,5%,1/10W,TP,1608	1	SA
....4	R1505	2007-000113	R-CHIP;33ohm,5%,1/10W,TP,1608	1	SA
....4	R1506	2007-000113	R-CHIP;33ohm,5%,1/10W,TP,1608	1	SA
....4	R1507	2007-000113	R-CHIP;33ohm,5%,1/10W,TP,1608	1	SA
....4	R1508	2007-000113	R-CHIP;33ohm,5%,1/10W,TP,1608	1	SA
....4	R1509	2007-000113	R-CHIP;33ohm,5%,1/10W,TP,1608	1	SA
....4	R1510	2007-000113	R-CHIP;33ohm,5%,1/10W,TP,1608	1	SA
....4	R1511	2007-000113	R-CHIP;33ohm,5%,1/10W,TP,1608	1	SA
....4	R1512	2007-000113	R-CHIP;33ohm,5%,1/10W,TP,1608	1	SA
....4	R1513	2007-000113	R-CHIP;33ohm,5%,1/10W,TP,1608	1	SA
....4	R1514	2007-000113	R-CHIP;33ohm,5%,1/10W,TP,1608	1	SA
....4	R1515	2007-000113	R-CHIP;33ohm,5%,1/10W,TP,1608	1	SA
....4	R1516	2007-000113	R-CHIP;33ohm,5%,1/10W,TP,1608	1	SA
....4	R1517	2007-000113	R-CHIP;33ohm,5%,1/10W,TP,1608	1	SA
....4	R1518	2007-000113	R-CHIP;33ohm,5%,1/10W,TP,1608	1	SA
....4	R1606	2007-000113	R-CHIP;33ohm,5%,1/10W,TP,1608	1	SA
....4	R1610	2007-000113	R-CHIP;33ohm,5%,1/10W,TP,1608	1	SA
....4	R1611	2007-000113	R-CHIP;33ohm,5%,1/10W,TP,1608	1	SA
....4	R1614	2007-000113	R-CHIP;33ohm,5%,1/10W,TP,1608	1	SA
....4	R1615	2007-000113	R-CHIP;33ohm,5%,1/10W,TP,1608	1	SA
....4	R1616	2007-000113	R-CHIP;33ohm,5%,1/10W,TP,1608	1	SA
....4	R1618	2007-000113	R-CHIP;33ohm,5%,1/10W,TP,1608	1	SA
....4	R911	2007-000113	R-CHIP;33ohm,5%,1/10W,TP,1608	1	SA
....4	R912	2007-000113	R-CHIP;33ohm,5%,1/10W,TP,1608	1	SA
....4	R914	2007-000113	R-CHIP;33ohm,5%,1/10W,TP,1608	1	SA
....4	R861	2007-000116	R-CHIP;120ohm,5%,1/10W,TP,1608	1	SA
....4	R319	2007-000119	R-CHIP;560ohm,5%,1/10W,TP,1608	1	SA
....4	R715	2007-000123	R-CHIP;1.5Kohm,5%,1/10W,TP,1608	1	SA
....4	R716	2007-000123	R-CHIP;1.5Kohm,5%,1/10W,TP,1608	1	SA
....4	R717	2007-000123	R-CHIP;1.5Kohm,5%,1/10W,TP,1608	1	SA
....4	R850	2007-000123	R-CHIP;1.5Kohm,5%,1/10W,TP,1608	1	SA
....4	R411	2007-000125	R-CHIP;3.9Kohm,5%,1/10W,TP,1608	1	SA
....4	R1426	2007-000130	R-CHIP;39Kohm,5%,1/10W,TP,1608	1	SA
....4	R1427	2007-000130	R-CHIP;39Kohm,5%,1/10W,TP,1608	1	SA
....4	R602	2007-000309	R-CHIP;10ohm,5%,1/10W,TP,1608	1	SA
....4	R604	2007-000309	R-CHIP;10ohm,5%,1/10W,TP,1608	1	SA
....4	R605	2007-000309	R-CHIP;10ohm,5%,1/10W,TP,1608	1	SA
....4	R862	2007-000309	R-CHIP;10ohm,5%,1/10W,TP,1608	1	SA
....4	R863	2007-000309	R-CHIP;10ohm,5%,1/10W,TP,1608	1	SA
....4	R864	2007-000309	R-CHIP;10ohm,5%,1/10W,TP,1608	1	SA
....4	R865	2007-000309	R-CHIP;10ohm,5%,1/10W,TP,1608	1	SA
....4	R866	2007-000309	R-CHIP;10ohm,5%,1/10W,TP,1608	1	SA
....4	R867	2007-000309	R-CHIP;10ohm,5%,1/10W,TP,1608	1	SA
....4	R868	2007-000309	R-CHIP;10ohm,5%,1/10W,TP,1608	1	SA
....4	R869	2007-000309	R-CHIP;10ohm,5%,1/10W,TP,1608	1	SA
....4	R870	2007-000309	R-CHIP;10ohm,5%,1/10W,TP,1608	1	SA
....4	R871	2007-000309	R-CHIP;10ohm,5%,1/10W,TP,1608	1	SA
....4	R872	2007-000309	R-CHIP;10ohm,5%,1/10W,TP,1608	1	SA
....4	R873	2007-000309	R-CHIP;10ohm,5%,1/10W,TP,1608	1	SA
....4	R875	2007-000309	R-CHIP;10ohm,5%,1/10W,TP,1608	1	SA
....4	R877	2007-000309	R-CHIP;10ohm,5%,1/10W,TP,1608	1	SA
....4	R880	2007-000309	R-CHIP;10ohm,5%,1/10W,TP,1608	1	SA
....4	R881	2007-000309	R-CHIP;10ohm,5%,1/10W,TP,1608	1	SA
....4	R901	2007-000309	R-CHIP;10ohm,5%,1/10W,TP,1608	1	SA
....4	R902	2007-000309	R-CHIP;10ohm,5%,1/10W,TP,1608	1	SA
....4	R903	2007-000309	R-CHIP;10ohm,5%,1/10W,TP,1608	1	SA
....4	R904	2007-000309	R-CHIP;10ohm,5%,1/10W,TP,1608	1	SA
....4	R905	2007-000309	R-CHIP;10ohm,5%,1/10W,TP,1608	1	SA
....4	R906	2007-000309	R-CHIP;10ohm,5%,1/10W,TP,1608	1	SA
....4	R907	2007-000309	R-CHIP;10ohm,5%,1/10W,TP,1608	1	SA

Level	Loc. No.	Code No.	Description & Specification	Q'ty	SA/SNA
....4	R908	2007-000309	R-CHIP;10ohm,5%,1/10W,TP,1608	1	SA
....4	R1428	2007-000329	R-CHIP;11Kohm,5%,1/10W,TP,1608	1	SA
....4	R1429	2007-000329	R-CHIP;11Kohm,5%,1/10W,TP,1608	1	SA
....4	R224	2007-000539	R-CHIP;200ohm,5%,1/10W,TP,1608	1	SA
....4	R839	2007-000539	R-CHIP;200ohm,5%,1/10W,TP,1608	1	SA
....4	R840	2007-000539	R-CHIP;200ohm,5%,1/10W,TP,1608	1	SA
....4	R841	2007-000539	R-CHIP;200ohm,5%,1/10W,TP,1608	1	SA
....4	R842	2007-000539	R-CHIP;200ohm,5%,1/10W,TP,1608	1	SA
....4	R843	2007-000539	R-CHIP;200ohm,5%,1/10W,TP,1608	1	SA
....4	R844	2007-000539	R-CHIP;200ohm,5%,1/10W,TP,1608	1	SA
....4	R845	2007-000539	R-CHIP;200ohm,5%,1/10W,TP,1608	1	SA
....4	R846	2007-000539	R-CHIP;200ohm,5%,1/10W,TP,1608	1	SA
....4	R851	2007-000539	R-CHIP;200ohm,5%,1/10W,TP,1608	1	SA
....4	R852	2007-000539	R-CHIP;200ohm,5%,1/10W,TP,1608	1	SA
....4	R853	2007-000539	R-CHIP;200ohm,5%,1/10W,TP,1608	1	SA
....4	R854	2007-000539	R-CHIP;200ohm,5%,1/10W,TP,1608	1	SA
....4	R855	2007-000539	R-CHIP;200ohm,5%,1/10W,TP,1608	1	SA
....4	R856	2007-000539	R-CHIP;200ohm,5%,1/10W,TP,1608	1	SA
....4	R857	2007-000539	R-CHIP;200ohm,5%,1/10W,TP,1608	1	SA
....4	R858	2007-000539	R-CHIP;200ohm,5%,1/10W,TP,1608	1	SA
....4	R402	2007-000593	R-CHIP;22ohm,5%,1/8W,TP,2012	1	SA
....4	R410	2007-000593	R-CHIP;22ohm,5%,1/8W,TP,2012	1	SA
....4	R1318	2007-000659	R-CHIP;27ohm,5%,1/10W,TP,1608	1	SA
....4	R1319	2007-000659	R-CHIP;27ohm,5%,1/10W,TP,1608	1	SA
....4	R109	2007-000701	R-CHIP;3.6Kohm,1%,1/10W,TP,1608	1	SA
....4	R111	2007-000701	R-CHIP;3.6Kohm,1%,1/10W,TP,1608	1	SA
....4	R805	2007-000708	R-CHIP;3.9Kohm,1%,1/10W,TP,1608	1	SA
....4	R833	2007-000708	R-CHIP;3.9Kohm,1%,1/10W,TP,1608	1	SA
....4	R1702	2007-000729	R-CHIP;300ohm,5%,1/10W,TP,1608	1	SA
....4	R1057	2007-000903	R-CHIP;430ohm,1%,1/10W,TP,1608	1	SA
....4	R1430	2007-001010	R-CHIP;51Kohm,5%,1/10W,TP,1608	1	SA
....4	R1431	2007-001010	R-CHIP;51Kohm,5%,1/10W,TP,1608	1	SA
....4	R1203	2007-001014	R-CHIP;51OHM,5%,1/10W,TP,1608	1	SA
....4	R1208	2007-001014	R-CHIP;51OHM,5%,1/10W,TP,1608	1	SA
....4	R1103	2007-001139	R-CHIP;7.5Kohm,1%,1/10W,TP,1608	1	SA
....4	R606	2007-001164	R-CHIP;75ohm,1%,1/10W,TP,1608	1	SA
....4	R607	2007-001164	R-CHIP;75ohm,1%,1/10W,TP,1608	1	SA
....4	R608	2007-001164	R-CHIP;75ohm,1%,1/10W,TP,1608	1	SA
....4	R611	2007-001164	R-CHIP;75ohm,1%,1/10W,TP,1608	1	SA
....4	R617	2007-001164	R-CHIP;75ohm,1%,1/10W,TP,1608	1	SA
....4	R618	2007-001164	R-CHIP;75ohm,1%,1/10W,TP,1608	1	SA
....4	R1411	2007-001167	R-CHIP;75ohm,5%,1/10W,TP,1608	1	SA
....4	R811	2007-001167	R-CHIP;75ohm,5%,1/10W,TP,1608	1	SA
....4	R812	2007-001167	R-CHIP;75ohm,5%,1/10W,TP,1608	1	SA
....4	R813	2007-001167	R-CHIP;75ohm,5%,1/10W,TP,1608	1	SA
....4	R819	2007-001167	R-CHIP;75ohm,5%,1/10W,TP,1608	1	SA
....4	R820	2007-001167	R-CHIP;75ohm,5%,1/10W,TP,1608	1	SA
....4	R104	2007-002768	R-CHIP;6.2Kohm,1%,1/10W,TP,1608	1	SA
....4	R105	2007-002768	R-CHIP;6.2Kohm,1%,1/10W,TP,1608	1	SA
....4	R401	2007-008720	R-CHIP;4.7ohm,1%,1/4W,TP,3216	1	SA
....4	R403	2007-008720	R-CHIP;4.7ohm,1%,1/4W,TP,3216	1	SA
....4	R409	2007-008720	R-CHIP;4.7ohm,1%,1/4W,TP,3216	1	SA
....4	R413	2007-008720	R-CHIP;4.7ohm,1%,1/4W,TP,3216	1	SA
....4	IC1203	2011-000002	R-NET;22ohm,5%,1/16W,L,CHIP,8P,TP,3216	1	SA
....4	RA1201	2011-000002	R-NET;22ohm,5%,1/16W,L,CHIP,8P,TP,3216	1	SA
....4	RA1202	2011-000002	R-NET;22ohm,5%,1/16W,L,CHIP,8P,TP,3216	1	SA
....4	RA1203	2011-000002	R-NET;22ohm,5%,1/16W,L,CHIP,8P,TP,3216	1	SA
....4	RA1204	2011-000002	R-NET;22ohm,5%,1/16W,L,CHIP,8P,TP,3216	1	SA
....4	RA1205	2011-000002	R-NET;22ohm,5%,1/16W,L,CHIP,8P,TP,3216	1	SA
....4	RA1206	2011-000002	R-NET;22ohm,5%,1/16W,L,CHIP,8P,TP,3216	1	SA
....4	RA1207	2011-000002	R-NET;22ohm,5%,1/16W,L,CHIP,8P,TP,3216	1	SA
....4	RA1401	2011-000002	R-NET;22ohm,5%,1/16W,L,CHIP,8P,TP,3216	1	SA
....4	RA1402	2011-000002	R-NET;22ohm,5%,1/16W,L,CHIP,8P,TP,3216	1	SA
....4	RA1403	2011-000002	R-NET;22ohm,5%,1/16W,L,CHIP,8P,TP,3216	1	SA
....4	RA1404	2011-000002	R-NET;22ohm,5%,1/16W,L,CHIP,8P,TP,3216	1	SA
....4	RA501	2011-000475	R-NET;33ohm,5%,1/16W,L,CHIP,8P,TP,3216	1	SA
....4	RA502	2011-000475	R-NET;33ohm,5%,1/16W,L,CHIP,8P,TP,3216	1	SA
....4	RA503	2011-000475	R-NET;33ohm,5%,1/16W,L,CHIP,8P,TP,3216	1	SA
....4	RA301	2011-000651	R-NET;10ohm,5%,1/16W,L,CHIP,8P,TP,3216	1	SA
....4	RA1501	2011-000881	R-NET;33ohm,5%,1/16W,L,CHIP,8P,TP,3.2x1.	1	SA
....4	RA1502	2011-000881	R-NET;33ohm,5%,1/16W,L,CHIP,8P,TP,3.2x1.	1	SA
....4	RA1503	2011-000881	R-NET;33ohm,5%,1/16W,L,CHIP,8P,TP,3.2x1.	1	SA

Level	Loc. No.	Code No.	Description & Specification	Q'ty	SA/SNA
....4	RA1504	2011-000881	R-NET;33ohm,5%,1/16W,L,CHIP,8P,TP,3.2x1.	1	SA
....4	RA1505	2011-000881	R-NET;33ohm,5%,1/16W,L,CHIP,8P,TP,3.2x1.	1	SA
....4	RA1506	2011-000881	R-NET;33ohm,5%,1/16W,L,CHIP,8P,TP,3.2x1.	1	SA
....4	RA1507	2011-000881	R-NET;33ohm,5%,1/16W,L,CHIP,8P,TP,3.2x1.	1	SA
....4	RA1508	2011-000881	R-NET;33ohm,5%,1/16W,L,CHIP,8P,TP,3.2x1.	1	SA
....4	RA1509	2011-000881	R-NET;33ohm,5%,1/16W,L,CHIP,8P,TP,3.2x1.	1	SA
....4	RA1510	2011-000881	R-NET;33ohm,5%,1/16W,L,CHIP,8P,TP,3.2x1.	1	SA
....4	RA1511	2011-000881	R-NET;33ohm,5%,1/16W,L,CHIP,8P,TP,3.2x1.	1	SA
....4	RA1601	2011-000881	R-NET;33ohm,5%,1/16W,L,CHIP,8P,TP,3.2x1.	1	SA
....4	RA1602	2011-000881	R-NET;33ohm,5%,1/16W,L,CHIP,8P,TP,3.2x1.	1	SA
....4	RA1603	2011-000881	R-NET;33ohm,5%,1/16W,L,CHIP,8P,TP,3.2x1.	1	SA
....4	RA1604	2011-000881	R-NET;33ohm,5%,1/16W,L,CHIP,8P,TP,3.2x1.	1	SA
....4	RA1605	2011-000881	R-NET;33ohm,5%,1/16W,L,CHIP,8P,TP,3.2x1.	1	SA
....4	RA1606	2011-000881	R-NET;33ohm,5%,1/16W,L,CHIP,8P,TP,3.2x1.	1	SA
....4	RA1607	2011-000881	R-NET;33ohm,5%,1/16W,L,CHIP,8P,TP,3.2x1.	1	SA
....4	RA1608	2011-000881	R-NET;33ohm,5%,1/16W,L,CHIP,8P,TP,3.2x1.	1	SA
....4	RA1609	2011-000881	R-NET;33ohm,5%,1/16W,L,CHIP,8P,TP,3.2x1.	1	SA
....4	RA1610	2011-000881	R-NET;33ohm,5%,1/16W,L,CHIP,8P,TP,3.2x1.	1	SA
....4	RA201	2011-001093	R-NET;100OHM,5%,1/16W,L,CHIP,8P,TP,3216	1	SA
....4	RA202	2011-001093	R-NET;100OHM,5%,1/16W,L,CHIP,8P,TP,3216	1	SA
....4	C428	2203-000125	C-CER,CHIP;1.2nF,10%,50V,X7R,TP,1608,-	1	SA
....4	C1307	2203-000140	C-CER,CHIP;1.5nF,10%,50V,X7R,1608	1	SA
....4	C315	2203-000140	C-CER,CHIP;1.5nF,10%,50V,X7R,1608	1	SA
....4	C327	2203-000140	C-CER,CHIP;1.5nF,10%,50V,X7R,1608	1	SA
....4	C103	2203-000189	C-CER,CHIP;100nF,+80-20%,25V,Y5V,1608	1	SA
....4	C105	2203-000189	C-CER,CHIP;100nF,+80-20%,25V,Y5V,1608	1	SA
....4	C107	2203-000189	C-CER,CHIP;100nF,+80-20%,25V,Y5V,1608	1	SA
....4	C1107	2203-000189	C-CER,CHIP;100nF,+80-20%,25V,Y5V,1608	1	SA
....4	C1108	2203-000189	C-CER,CHIP;100nF,+80-20%,25V,Y5V,1608	1	SA
....4	C1111	2203-000189	C-CER,CHIP;100nF,+80-20%,25V,Y5V,1608	1	SA
....4	C1112	2203-000189	C-CER,CHIP;100nF,+80-20%,25V,Y5V,1608	1	SA
....4	C1113	2203-000189	C-CER,CHIP;100nF,+80-20%,25V,Y5V,1608	1	SA
....4	C1116	2203-000189	C-CER,CHIP;100nF,+80-20%,25V,Y5V,1608	1	SA
....4	C1117	2203-000189	C-CER,CHIP;100nF,+80-20%,25V,Y5V,1608	1	SA
....4	C1120	2203-000189	C-CER,CHIP;100nF,+80-20%,25V,Y5V,1608	1	SA
....4	C1121	2203-000189	C-CER,CHIP;100nF,+80-20%,25V,Y5V,1608	1	SA
....4	C1125	2203-000189	C-CER,CHIP;100nF,+80-20%,25V,Y5V,1608	1	SA
....4	C1126	2203-000189	C-CER,CHIP;100nF,+80-20%,25V,Y5V,1608	1	SA
....4	C1127	2203-000189	C-CER,CHIP;100nF,+80-20%,25V,Y5V,1608	1	SA
....4	C1128	2203-000189	C-CER,CHIP;100nF,+80-20%,25V,Y5V,1608	1	SA
....4	C1129	2203-000189	C-CER,CHIP;100nF,+80-20%,25V,Y5V,1608	1	SA
....4	C1133	2203-000189	C-CER,CHIP;100nF,+80-20%,25V,Y5V,1608	1	SA
....4	C1134	2203-000189	C-CER,CHIP;100nF,+80-20%,25V,Y5V,1608	1	SA
....4	C1135	2203-000189	C-CER,CHIP;100nF,+80-20%,25V,Y5V,1608	1	SA
....4	C1136	2203-000189	C-CER,CHIP;100nF,+80-20%,25V,Y5V,1608	1	SA
....4	C1137	2203-000189	C-CER,CHIP;100nF,+80-20%,25V,Y5V,1608	1	SA
....4	C1140	2203-000189	C-CER,CHIP;100nF,+80-20%,25V,Y5V,1608	1	SA
....4	C1141	2203-000189	C-CER,CHIP;100nF,+80-20%,25V,Y5V,1608	1	SA
....4	C1144	2203-000189	C-CER,CHIP;100nF,+80-20%,25V,Y5V,1608	1	SA
....4	C1145	2203-000189	C-CER,CHIP;100nF,+80-20%,25V,Y5V,1608	1	SA
....4	C1147	2203-000189	C-CER,CHIP;100nF,+80-20%,25V,Y5V,1608	1	SA
....4	C1148	2203-000189	C-CER,CHIP;100nF,+80-20%,25V,Y5V,1608	1	SA
....4	C1149	2203-000189	C-CER,CHIP;100nF,+80-20%,25V,Y5V,1608	1	SA
....4	C1150	2203-000189	C-CER,CHIP;100nF,+80-20%,25V,Y5V,1608	1	SA
....4	C1156	2203-000189	C-CER,CHIP;100nF,+80-20%,25V,Y5V,1608	1	SA
....4	C1157	2203-000189	C-CER,CHIP;100nF,+80-20%,25V,Y5V,1608	1	SA
....4	C1158	2203-000189	C-CER,CHIP;100nF,+80-20%,25V,Y5V,1608	1	SA
....4	C1159	2203-000189	C-CER,CHIP;100nF,+80-20%,25V,Y5V,1608	1	SA
....4	C116	2203-000189	C-CER,CHIP;100nF,+80-20%,25V,Y5V,1608	1	SA
....4	C1160	2203-000189	C-CER,CHIP;100nF,+80-20%,25V,Y5V,1608	1	SA
....4	C1161	2203-000189	C-CER,CHIP;100nF,+80-20%,25V,Y5V,1608	1	SA
....4	C1162	2203-000189	C-CER,CHIP;100nF,+80-20%,25V,Y5V,1608	1	SA
....4	C1163	2203-000189	C-CER,CHIP;100nF,+80-20%,25V,Y5V,1608	1	SA
....4	C1164	2203-000189	C-CER,CHIP;100nF,+80-20%,25V,Y5V,1608	1	SA
....4	C1165	2203-000189	C-CER,CHIP;100nF,+80-20%,25V,Y5V,1608	1	SA
....4	C1166	2203-000189	C-CER,CHIP;100nF,+80-20%,25V,Y5V,1608	1	SA
....4	C1167	2203-000189	C-CER,CHIP;100nF,+80-20%,25V,Y5V,1608	1	SA
....4	C117	2203-000189	C-CER,CHIP;100nF,+80-20%,25V,Y5V,1608	1	SA
....4	C124	2203-000189	C-CER,CHIP;100nF,+80-20%,25V,Y5V,1608	1	SA
....4	C1302	2203-000189	C-CER,CHIP;100nF,+80-20%,25V,Y5V,1608	1	SA
....4	C1401	2203-000189	C-CER,CHIP;100nF,+80-20%,25V,Y5V,1608	1	SA
....4	C1403	2203-000189	C-CER,CHIP;100nF,+80-20%,25V,Y5V,1608	1	SA

Level	Loc. No.	Code No.	Description & Specification	Q'ty	SA/SNA
....4	C153	2203-000189	C-CER,CHIP;100nF,+80-20%,25V,Y5V,1608	1	SA
....4	C155	2203-000189	C-CER,CHIP;100nF,+80-20%,25V,Y5V,1608	1	SA
....4	C157	2203-000189	C-CER,CHIP;100nF,+80-20%,25V,Y5V,1608	1	SA
....4	C1705	2203-000189	C-CER,CHIP;100nF,+80-20%,25V,Y5V,1608	1	SA
....4	C1706	2203-000189	C-CER,CHIP;100nF,+80-20%,25V,Y5V,1608	1	SA
....4	C1707	2203-000189	C-CER,CHIP;100nF,+80-20%,25V,Y5V,1608	1	SA
....4	C1708	2203-000189	C-CER,CHIP;100nF,+80-20%,25V,Y5V,1608	1	SA
....4	C1709	2203-000189	C-CER,CHIP;100nF,+80-20%,25V,Y5V,1608	1	SA
....4	C1713	2203-000189	C-CER,CHIP;100nF,+80-20%,25V,Y5V,1608	1	SA
....4	C1714	2203-000189	C-CER,CHIP;100nF,+80-20%,25V,Y5V,1608	1	SA
....4	C1715	2203-000189	C-CER,CHIP;100nF,+80-20%,25V,Y5V,1608	1	SA
....4	C1716	2203-000189	C-CER,CHIP;100nF,+80-20%,25V,Y5V,1608	1	SA
....4	C1717	2203-000189	C-CER,CHIP;100nF,+80-20%,25V,Y5V,1608	1	SA
....4	C1718	2203-000189	C-CER,CHIP;100nF,+80-20%,25V,Y5V,1608	1	SA
....4	C1719	2203-000189	C-CER,CHIP;100nF,+80-20%,25V,Y5V,1608	1	SA
....4	C1723	2203-000189	C-CER,CHIP;100nF,+80-20%,25V,Y5V,1608	1	SA
....4	C1724	2203-000189	C-CER,CHIP;100nF,+80-20%,25V,Y5V,1608	1	SA
....4	C1725	2203-000189	C-CER,CHIP;100nF,+80-20%,25V,Y5V,1608	1	SA
....4	C1726	2203-000189	C-CER,CHIP;100nF,+80-20%,25V,Y5V,1608	1	SA
....4	C1727	2203-000189	C-CER,CHIP;100nF,+80-20%,25V,Y5V,1608	1	SA
....4	C1728	2203-000189	C-CER,CHIP;100nF,+80-20%,25V,Y5V,1608	1	SA
....4	C1729	2203-000189	C-CER,CHIP;100nF,+80-20%,25V,Y5V,1608	1	SA
....4	C1733	2203-000189	C-CER,CHIP;100nF,+80-20%,25V,Y5V,1608	1	SA
....4	C1734	2203-000189	C-CER,CHIP;100nF,+80-20%,25V,Y5V,1608	1	SA
....4	C1744	2203-000189	C-CER,CHIP;100nF,+80-20%,25V,Y5V,1608	1	SA
....4	C1747	2203-000189	C-CER,CHIP;100nF,+80-20%,25V,Y5V,1608	1	SA
....4	C1756	2203-000189	C-CER,CHIP;100nF,+80-20%,25V,Y5V,1608	1	SA
....4	C1757	2203-000189	C-CER,CHIP;100nF,+80-20%,25V,Y5V,1608	1	SA
....4	C1758	2203-000189	C-CER,CHIP;100nF,+80-20%,25V,Y5V,1608	1	SA
....4	C1759	2203-000189	C-CER,CHIP;100nF,+80-20%,25V,Y5V,1608	1	SA
....4	C1760	2203-000189	C-CER,CHIP;100nF,+80-20%,25V,Y5V,1608	1	SA
....4	C1761	2203-000189	C-CER,CHIP;100nF,+80-20%,25V,Y5V,1608	1	SA
....4	C1762	2203-000189	C-CER,CHIP;100nF,+80-20%,25V,Y5V,1608	1	SA
....4	C210	2203-000189	C-CER,CHIP;100nF,+80-20%,25V,Y5V,1608	1	SA
....4	C211	2203-000189	C-CER,CHIP;100nF,+80-20%,25V,Y5V,1608	1	SA
....4	C313	2203-000189	C-CER,CHIP;100nF,+80-20%,25V,Y5V,1608	1	SA
....4	C322	2203-000189	C-CER,CHIP;100nF,+80-20%,25V,Y5V,1608	1	SA
....4	C323	2203-000189	C-CER,CHIP;100nF,+80-20%,25V,Y5V,1608	1	SA
....4	C324	2203-000189	C-CER,CHIP;100nF,+80-20%,25V,Y5V,1608	1	SA
....4	C325	2203-000189	C-CER,CHIP;100nF,+80-20%,25V,Y5V,1608	1	SA
....4	C342	2203-000189	C-CER,CHIP;100nF,+80-20%,25V,Y5V,1608	1	SA
....4	C344	2203-000189	C-CER,CHIP;100nF,+80-20%,25V,Y5V,1608	1	SA
....4	C345	2203-000189	C-CER,CHIP;100nF,+80-20%,25V,Y5V,1608	1	SA
....4	C352	2203-000189	C-CER,CHIP;100nF,+80-20%,25V,Y5V,1608	1	SA
....4	C355	2203-000189	C-CER,CHIP;100nF,+80-20%,25V,Y5V,1608	1	SA
....4	C403	2203-000189	C-CER,CHIP;100nF,+80-20%,25V,Y5V,1608	1	SA
....4	C407	2203-000189	C-CER,CHIP;100nF,+80-20%,25V,Y5V,1608	1	SA
....4	C412	2203-000189	C-CER,CHIP;100nF,+80-20%,25V,Y5V,1608	1	SA
....4	C429	2203-000189	C-CER,CHIP;100nF,+80-20%,25V,Y5V,1608	1	SA
....4	C501	2203-000189	C-CER,CHIP;100nF,+80-20%,25V,Y5V,1608	1	SA
....4	C502	2203-000189	C-CER,CHIP;100nF,+80-20%,25V,Y5V,1608	1	SA
....4	C504	2203-000189	C-CER,CHIP;100nF,+80-20%,25V,Y5V,1608	1	SA
....4	C508	2203-000189	C-CER,CHIP;100nF,+80-20%,25V,Y5V,1608	1	SA
....4	C517	2203-000189	C-CER,CHIP;100nF,+80-20%,25V,Y5V,1608	1	SA
....4	C521	2203-000189	C-CER,CHIP;100nF,+80-20%,25V,Y5V,1608	1	SA
....4	C528	2203-000189	C-CER,CHIP;100nF,+80-20%,25V,Y5V,1608	1	SA
....4	C533	2203-000189	C-CER,CHIP;100nF,+80-20%,25V,Y5V,1608	1	SA
....4	C539	2203-000189	C-CER,CHIP;100nF,+80-20%,25V,Y5V,1608	1	SA
....4	C703	2203-000189	C-CER,CHIP;100nF,+80-20%,25V,Y5V,1608	1	SA
....4	C704	2203-000189	C-CER,CHIP;100nF,+80-20%,25V,Y5V,1608	1	SA
....4	C705	2203-000189	C-CER,CHIP;100nF,+80-20%,25V,Y5V,1608	1	SA
....4	C706	2203-000189	C-CER,CHIP;100nF,+80-20%,25V,Y5V,1608	1	SA
....4	C709	2203-000189	C-CER,CHIP;100nF,+80-20%,25V,Y5V,1608	1	SA
....4	C802	2203-000189	C-CER,CHIP;100nF,+80-20%,25V,Y5V,1608	1	SA
....4	C804	2203-000189	C-CER,CHIP;100nF,+80-20%,25V,Y5V,1608	1	SA
....4	C813	2203-000189	C-CER,CHIP;100nF,+80-20%,25V,Y5V,1608	1	SA
....4	C912	2203-000189	C-CER,CHIP;100nF,+80-20%,25V,Y5V,1608	1	SA
....4	C913	2203-000189	C-CER,CHIP;100nF,+80-20%,25V,Y5V,1608	1	SA
....4	C914	2203-000189	C-CER,CHIP;100nF,+80-20%,25V,Y5V,1608	1	SA
....4	C915	2203-000189	C-CER,CHIP;100nF,+80-20%,25V,Y5V,1608	1	SA
....4	C916	2203-000189	C-CER,CHIP;100nF,+80-20%,25V,Y5V,1608	1	SA
....4	C917	2203-000189	C-CER,CHIP;100nF,+80-20%,25V,Y5V,1608	1	SA

Level	Loc. No.	Code No.	Description & Specification	Q'ty	SA/SNA
....4	C918	2203-000189	C-CER,CHIP;100nF,+80-20%,25V,Y5V,1608	1	SA
....4	C919	2203-000189	C-CER,CHIP;100nF,+80-20%,25V,Y5V,1608	1	SA
....4	C920	2203-000189	C-CER,CHIP;100nF,+80-20%,25V,Y5V,1608	1	SA
....4	C921	2203-000189	C-CER,CHIP;100nF,+80-20%,25V,Y5V,1608	1	SA
....4	C922	2203-000189	C-CER,CHIP;100nF,+80-20%,25V,Y5V,1608	1	SA
....4	C923	2203-000189	C-CER,CHIP;100nF,+80-20%,25V,Y5V,1608	1	SA
....4	C924	2203-000189	C-CER,CHIP;100nF,+80-20%,25V,Y5V,1608	1	SA
....4	C925	2203-000189	C-CER,CHIP;100nF,+80-20%,25V,Y5V,1608	1	SA
....4	C926	2203-000189	C-CER,CHIP;100nF,+80-20%,25V,Y5V,1608	1	SA
....4	C927	2203-000189	C-CER,CHIP;100nF,+80-20%,25V,Y5V,1608	1	SA
....4	C928	2203-000189	C-CER,CHIP;100nF,+80-20%,25V,Y5V,1608	1	SA
....4	C929	2203-000189	C-CER,CHIP;100nF,+80-20%,25V,Y5V,1608	1	SA
....4	C930	2203-000189	C-CER,CHIP;100nF,+80-20%,25V,Y5V,1608	1	SA
....4	C931	2203-000189	C-CER,CHIP;100nF,+80-20%,25V,Y5V,1608	1	SA
....4	C932	2203-000189	C-CER,CHIP;100nF,+80-20%,25V,Y5V,1608	1	SA
....4	C933	2203-000189	C-CER,CHIP;100nF,+80-20%,25V,Y5V,1608	1	SA
....4	C937	2203-000189	C-CER,CHIP;100nF,+80-20%,25V,Y5V,1608	1	SA
....4	C433	2203-000236	C-CER,CHIP;0.1nF,5%,50V,C0G,1608	1	SA
....4	C604	2203-000236	C-CER,CHIP;0.1nF,5%,50V,C0G,1608	1	SA
....4	C609	2203-000236	C-CER,CHIP;0.1nF,5%,50V,C0G,1608	1	SA
....4	C806	2203-000236	C-CER,CHIP;0.1nF,5%,50V,C0G,1608	1	SA
....4	C807	2203-000236	C-CER,CHIP;0.1nF,5%,50V,C0G,1608	1	SA
....4	C818	2203-000236	C-CER,CHIP;0.1nF,5%,50V,C0G,1608	1	SA
....4	C1006	2203-000257	C-CER,CHIP;10nF,10%,50V,X7R,1608	1	SA
....4	C101	2203-000257	C-CER,CHIP;10nF,10%,50V,X7R,1608	1	SA
....4	C1015	2203-000257	C-CER,CHIP;10nF,10%,50V,X7R,1608	1	SA
....4	C1019	2203-000257	C-CER,CHIP;10nF,10%,50V,X7R,1608	1	SA
....4	C102	2203-000257	C-CER,CHIP;10nF,10%,50V,X7R,1608	1	SA
....4	C1022	2203-000257	C-CER,CHIP;10nF,10%,50V,X7R,1608	1	SA
....4	C1027	2203-000257	C-CER,CHIP;10nF,10%,50V,X7R,1608	1	SA
....4	C104	2203-000257	C-CER,CHIP;10nF,10%,50V,X7R,1608	1	SA
....4	C114	2203-000257	C-CER,CHIP;10nF,10%,50V,X7R,1608	1	SA
....4	C118	2203-000257	C-CER,CHIP;10nF,10%,50V,X7R,1608	1	SA
....4	C1208	2203-000257	C-CER,CHIP;10nF,10%,50V,X7R,1608	1	SA
....4	C1209	2203-000257	C-CER,CHIP;10nF,10%,50V,X7R,1608	1	SA
....4	C1210	2203-000257	C-CER,CHIP;10nF,10%,50V,X7R,1608	1	SA
....4	C1211	2203-000257	C-CER,CHIP;10nF,10%,50V,X7R,1608	1	SA
....4	C1212	2203-000257	C-CER,CHIP;10nF,10%,50V,X7R,1608	1	SA
....4	C1218	2203-000257	C-CER,CHIP;10nF,10%,50V,X7R,1608	1	SA
....4	C1219	2203-000257	C-CER,CHIP;10nF,10%,50V,X7R,1608	1	SA
....4	C1222	2203-000257	C-CER,CHIP;10nF,10%,50V,X7R,1608	1	SA
....4	C127	2203-000257	C-CER,CHIP;10nF,10%,50V,X7R,1608	1	SA
....4	C1314	2203-000257	C-CER,CHIP;10nF,10%,50V,X7R,1608	1	SA
....4	C132	2203-000257	C-CER,CHIP;10nF,10%,50V,X7R,1608	1	SA
....4	C149	2203-000257	C-CER,CHIP;10nF,10%,50V,X7R,1608	1	SA
....4	C1603	2203-000257	C-CER,CHIP;10nF,10%,50V,X7R,1608	1	SA
....4	C1605	2203-000257	C-CER,CHIP;10nF,10%,50V,X7R,1608	1	SA
....4	C1710	2203-000257	C-CER,CHIP;10nF,10%,50V,X7R,1608	1	SA
....4	C1711	2203-000257	C-CER,CHIP;10nF,10%,50V,X7R,1608	1	SA
....4	C1712	2203-000257	C-CER,CHIP;10nF,10%,50V,X7R,1608	1	SA
....4	C1720	2203-000257	C-CER,CHIP;10nF,10%,50V,X7R,1608	1	SA
....4	C1721	2203-000257	C-CER,CHIP;10nF,10%,50V,X7R,1608	1	SA
....4	C1722	2203-000257	C-CER,CHIP;10nF,10%,50V,X7R,1608	1	SA
....4	C1730	2203-000257	C-CER,CHIP;10nF,10%,50V,X7R,1608	1	SA
....4	C1731	2203-000257	C-CER,CHIP;10nF,10%,50V,X7R,1608	1	SA
....4	C1732	2203-000257	C-CER,CHIP;10nF,10%,50V,X7R,1608	1	SA
....4	C1763	2203-000257	C-CER,CHIP;10nF,10%,50V,X7R,1608	1	SA
....4	C1764	2203-000257	C-CER,CHIP;10nF,10%,50V,X7R,1608	1	SA
....4	C1765	2203-000257	C-CER,CHIP;10nF,10%,50V,X7R,1608	1	SA
....4	C213	2203-000257	C-CER,CHIP;10nF,10%,50V,X7R,1608	1	SA
....4	C318	2203-000257	C-CER,CHIP;10nF,10%,50V,X7R,1608	1	SA
....4	C511	2203-000257	C-CER,CHIP;10nF,10%,50V,X7R,1608	1	SA
....4	C520	2203-000257	C-CER,CHIP;10nF,10%,50V,X7R,1608	1	SA
....4	C532	2203-000257	C-CER,CHIP;10nF,10%,50V,X7R,1608	1	SA
....4	C707	2203-000257	C-CER,CHIP;10nF,10%,50V,X7R,1608	1	SA
....4	C713	2203-000257	C-CER,CHIP;10nF,10%,50V,X7R,1608	1	SA
....4	C714	2203-000257	C-CER,CHIP;10nF,10%,50V,X7R,1608	1	SA
....4	C716	2203-000257	C-CER,CHIP;10nF,10%,50V,X7R,1608	1	SA
....4	C906	2203-000257	C-CER,CHIP;10nF,10%,50V,X7R,1608	1	SA
....4	C907	2203-000257	C-CER,CHIP;10nF,10%,50V,X7R,1608	1	SA
....4	C908	2203-000257	C-CER,CHIP;10nF,10%,50V,X7R,1608	1	SA
....4	C909	2203-000257	C-CER,CHIP;10nF,10%,50V,X7R,1608	1	SA

Level	Loc. No.	Code No.	Description & Specification	Q'ty	SA/SNA
....4	C910	2203-000257	C-CER,CHIP;10nF,10%,50V,X7R,1608	1	SA
....4	C319	2203-000357	C-CER,CHIP;0.15nF,5%,50V,C0G,1608	1	SA
....4	C145	2203-000405	C-CER,CHIP;0.18nF,5%,50V,C0G,1608	1	SA
....4	C146	2203-000405	C-CER,CHIP;0.18nF,5%,50V,C0G,1608	1	SA
....4	C901	2203-000426	C-CER,CHIP;0.018nF,5%,50V,C0G,1608	1	SA
....4	C905	2203-000426	C-CER,CHIP;0.018nF,5%,50V,C0G,1608	1	SA
....4	C1003	2203-000440	C-CER,CHIP;1nF,10%,50V,X7R,1608	1	SA
....4	C1007	2203-000440	C-CER,CHIP;1nF,10%,50V,X7R,1608	1	SA
....4	C1016	2203-000440	C-CER,CHIP;1nF,10%,50V,X7R,1608	1	SA
....4	C1020	2203-000440	C-CER,CHIP;1nF,10%,50V,X7R,1608	1	SA
....4	C1021	2203-000440	C-CER,CHIP;1nF,10%,50V,X7R,1608	1	SA
....4	C1304	2203-000440	C-CER,CHIP;1nF,10%,50V,X7R,1608	1	SA
....4	C1308	2203-000440	C-CER,CHIP;1nF,10%,50V,X7R,1608	1	SA
....4	C206	2203-000440	C-CER,CHIP;1nF,10%,50V,X7R,1608	1	SA
....4	C404	2203-000440	C-CER,CHIP;1nF,10%,50V,X7R,1608	1	SA
....4	C405	2203-000440	C-CER,CHIP;1nF,10%,50V,X7R,1608	1	SA
....4	C431	2203-000440	C-CER,CHIP;1nF,10%,50V,X7R,1608	1	SA
....4	C432	2203-000440	C-CER,CHIP;1nF,10%,50V,X7R,1608	1	SA
....4	C540	2203-000440	C-CER,CHIP;1nF,10%,50V,X7R,1608	1	SA
....4	C535	2203-000491	C-CER,CHIP;2.2nF,10%,50V,X7R,1608	1	SA
....4	C1123	2203-000531	C-CER,CHIP;2.7nF,10%,50V,X7R,1608	1	SA
....4	C1131	2203-000531	C-CER,CHIP;2.7nF,10%,50V,X7R,1608	1	SA
....4	C207	2203-000626	C-CER,CHIP;0.022nF,5%,50V,C0G,1608	1	SA
....4	C208	2203-000626	C-CER,CHIP;0.022nF,5%,50V,C0G,1608	1	SA
....4	C1303	2203-000681	C-CER,CHIP;0.027nF,5%,50V,C0G,1608	1	SA
....4	C1305	2203-000681	C-CER,CHIP;0.027nF,5%,50V,C0G,1608	1	SA
....4	C331	2203-000681	C-CER,CHIP;0.027nF,5%,50V,C0G,1608	1	SA
....4	C340	2203-000681	C-CER,CHIP;0.027nF,5%,50V,C0G,1608	1	SA
....4	C147	2203-000715	C-CER,CHIP;3.3nF,10%,50V,X7R,1608	1	SA
....4	C148	2203-000715	C-CER,CHIP;3.3nF,10%,50V,X7R,1608	1	SA
....4	C413	2203-000783	C-CER,CHIP;0.33nF,5%,50V,C0G,1608	1	SA
....4	C422	2203-000783	C-CER,CHIP;0.33nF,5%,50V,C0G,1608	1	SA
....4	C605	2203-000783	C-CER,CHIP;0.33nF,5%,50V,C0G,1608	1	SA
....4	C606	2203-000783	C-CER,CHIP;0.33nF,5%,50V,C0G,1608	1	SA
....4	C607	2203-000783	C-CER,CHIP;0.33nF,5%,50V,C0G,1608	1	SA
....4	C608	2203-000783	C-CER,CHIP;0.33nF,5%,50V,C0G,1608	1	SA
....4	C610	2203-000783	C-CER,CHIP;0.33nF,5%,50V,C0G,1608	1	SA
....4	C613	2203-000783	C-CER,CHIP;0.33nF,5%,50V,C0G,1608	1	SA
....4	C614	2203-000783	C-CER,CHIP;0.33nF,5%,50V,C0G,1608	1	SA
....4	C810	2203-000783	C-CER,CHIP;0.33nF,5%,50V,C0G,1608	1	SA
....4	C811	2203-000783	C-CER,CHIP;0.33nF,5%,50V,C0G,1608	1	SA
....4	C823	2203-000783	C-CER,CHIP;0.33nF,5%,50V,C0G,1608	1	SA
....4	C824	2203-000783	C-CER,CHIP;0.33nF,5%,50V,C0G,1608	1	SA
....4	C353	2203-000798	C-CER,CHIP;33nF,10%,16V,X7R,TP,1608,-	1	SA
....4	C354	2203-000798	C-CER,CHIP;33nF,10%,16V,X7R,TP,1608,-	1	SA
....4	C601	2203-000815	C-CER,CHIP;0.033nF,5%,50V,C0G,1608	1	SA
....4	C602	2203-000815	C-CER,CHIP;0.033nF,5%,50V,C0G,1608	1	SA
....4	C603	2203-000815	C-CER,CHIP;0.033nF,5%,50V,C0G,1608	1	SA
....4	C808	2203-000815	C-CER,CHIP;0.033nF,5%,50V,C0G,1608	1	SA
....4	C809	2203-000815	C-CER,CHIP;0.033nF,5%,50V,C0G,1608	1	SA
....4	C1310	2203-000838	C-CER,CHIP;0.39NF,5%,50V,C0G,TP,1608	1	SA
....4	C1203	2203-000888	C-CER,CHIP;4.7nF,10%,50V,X7R,1608	1	SA
....4	C1204	2203-000888	C-CER,CHIP;4.7nF,10%,50V,X7R,1608	1	SA
....4	C1205	2203-000888	C-CER,CHIP;4.7nF,10%,50V,X7R,1608	1	SA
....4	C536	2203-000888	C-CER,CHIP;4.7nF,10%,50V,X7R,1608	1	SA
....4	C903	2203-000888	C-CER,CHIP;4.7nF,10%,50V,X7R,1608	1	SA
....4	C904	2203-000888	C-CER,CHIP;4.7nF,10%,50V,X7R,1608	1	SA
....4	C329	2203-000972	C-CER,CHIP;47nF,10%,16V,X7R,1608	1	SA
....4	C527	2203-000972	C-CER,CHIP;47nF,10%,16V,X7R,1608	1	SA
....4	C934	2203-000972	C-CER,CHIP;47nF,10%,16V,X7R,1608	1	SA
....4	C715	2203-000998	C-CER,CHIP;0.047nF,5%,50V,C0G,1608	1	SA
....4	C1405	2203-001397	C-CER,CHIP;2.2nF,5%,50V,NP0,1608	1	SA
....4	C1406	2203-001397	C-CER,CHIP;2.2nF,5%,50V,NP0,1608	1	SA
....4	C320	2203-001402	C-CER,CHIP;220nF,+80-20%,16V,Y5V,TP,1608	1	SA
....4	C1309	2203-001554	C-CER,CHIP;1.8nF,10%,50V,X7R,1608	1	SA
....4	C434	2203-001607	C-CER,CHIP;0.22nF,5%,50V,NP0,1608	1	SA
....4	C531	2203-001607	C-CER,CHIP;0.22nF,5%,50V,NP0,1608	1	SA
....4	C1312	2203-001630	C-CER,CHIP;330nF,+80-20%,16V,Y5V,1608	1	SA
....4	C316	2203-001656	C-CER,CHIP;0.47nF,5%,50V,NP0,1608	1	SA
....4	C326	2203-001656	C-CER,CHIP;0.47nF,5%,50V,NP0,1608	1	SA
....4	C368	2203-001724	C-CER,CHIP;4700nF,+80-20%,16V,Y5V,3216	1	SA
....4	C1005	2203-005005	C-CER,CHIP;100nF,10%,16V,X7R,1608	1	SA

Level	Loc. No.	Code No.	Description & Specification	Q'ty	SA/SNA
....4	C1009	2203-005005	C-CER,CHIP;100nF,10%,16V,X7R,1608	1	SA
....4	C1010	2203-005005	C-CER,CHIP;100nF,10%,16V,X7R,1608	1	SA
....4	C1014	2203-005005	C-CER,CHIP;100nF,10%,16V,X7R,1608	1	SA
....4	C1018	2203-005005	C-CER,CHIP;100nF,10%,16V,X7R,1608	1	SA
....4	C1023	2203-005005	C-CER,CHIP;100nF,10%,16V,X7R,1608	1	SA
....4	C1026	2203-005005	C-CER,CHIP;100nF,10%,16V,X7R,1608	1	SA
....4	C1030	2203-005005	C-CER,CHIP;100nF,10%,16V,X7R,1608	1	SA
....4	C109	2203-005005	C-CER,CHIP;100nF,10%,16V,X7R,1608	1	SA
....4	C1101	2203-005005	C-CER,CHIP;100nF,10%,16V,X7R,1608	1	SA
....4	C1104	2203-005005	C-CER,CHIP;100nF,10%,16V,X7R,1608	1	SA
....4	C111	2203-005005	C-CER,CHIP;100nF,10%,16V,X7R,1608	1	SA
....4	C1152	2203-005005	C-CER,CHIP;100nF,10%,16V,X7R,1608	1	SA
....4	C1153	2203-005005	C-CER,CHIP;100nF,10%,16V,X7R,1608	1	SA
....4	C1201	2203-005005	C-CER,CHIP;100nF,10%,16V,X7R,1608	1	SA
....4	C1202	2203-005005	C-CER,CHIP;100nF,10%,16V,X7R,1608	1	SA
....4	C1206	2203-005005	C-CER,CHIP;100nF,10%,16V,X7R,1608	1	SA
....4	C1207	2203-005005	C-CER,CHIP;100nF,10%,16V,X7R,1608	1	SA
....4	C121	2203-005005	C-CER,CHIP;100nF,10%,16V,X7R,1608	1	SA
....4	C1216	2203-005005	C-CER,CHIP;100nF,10%,16V,X7R,1608	1	SA
....4	C1217	2203-005005	C-CER,CHIP;100nF,10%,16V,X7R,1608	1	SA
....4	C125	2203-005005	C-CER,CHIP;100nF,10%,16V,X7R,1608	1	SA
....4	C126	2203-005005	C-CER,CHIP;100nF,10%,16V,X7R,1608	1	SA
....4	C129	2203-005005	C-CER,CHIP;100nF,10%,16V,X7R,1608	1	SA
....4	C1306	2203-005005	C-CER,CHIP;100nF,10%,16V,X7R,1608	1	SA
....4	C1313	2203-005005	C-CER,CHIP;100nF,10%,16V,X7R,1608	1	SA
....4	C1315	2203-005005	C-CER,CHIP;100nF,10%,16V,X7R,1608	1	SA
....4	C134	2203-005005	C-CER,CHIP;100nF,10%,16V,X7R,1608	1	SA
....4	C136	2203-005005	C-CER,CHIP;100nF,10%,16V,X7R,1608	1	SA
....4	C141	2203-005005	C-CER,CHIP;100nF,10%,16V,X7R,1608	1	SA
....4	C144	2203-005005	C-CER,CHIP;100nF,10%,16V,X7R,1608	1	SA
....4	C1501	2203-005005	C-CER,CHIP;100nF,10%,16V,X7R,1608	1	SA
....4	C1502	2203-005005	C-CER,CHIP;100nF,10%,16V,X7R,1608	1	SA
....4	C1505	2203-005005	C-CER,CHIP;100nF,10%,16V,X7R,1608	1	SA
....4	C1506	2203-005005	C-CER,CHIP;100nF,10%,16V,X7R,1608	1	SA
....4	C1507	2203-005005	C-CER,CHIP;100nF,10%,16V,X7R,1608	1	SA
....4	C1508	2203-005005	C-CER,CHIP;100nF,10%,16V,X7R,1608	1	SA
....4	C1509	2203-005005	C-CER,CHIP;100nF,10%,16V,X7R,1608	1	SA
....4	C1510	2203-005005	C-CER,CHIP;100nF,10%,16V,X7R,1608	1	SA
....4	C1511	2203-005005	C-CER,CHIP;100nF,10%,16V,X7R,1608	1	SA
....4	C1512	2203-005005	C-CER,CHIP;100nF,10%,16V,X7R,1608	1	SA
....4	C1513	2203-005005	C-CER,CHIP;100nF,10%,16V,X7R,1608	1	SA
....4	C1514	2203-005005	C-CER,CHIP;100nF,10%,16V,X7R,1608	1	SA
....4	C1515	2203-005005	C-CER,CHIP;100nF,10%,16V,X7R,1608	1	SA
....4	C1516	2203-005005	C-CER,CHIP;100nF,10%,16V,X7R,1608	1	SA
....4	C1518	2203-005005	C-CER,CHIP;100nF,10%,16V,X7R,1608	1	SA
....4	C1519	2203-005005	C-CER,CHIP;100nF,10%,16V,X7R,1608	1	SA
....4	C158	2203-005005	C-CER,CHIP;100nF,10%,16V,X7R,1608	1	SA
....4	C159	2203-005005	C-CER,CHIP;100nF,10%,16V,X7R,1608	1	SA
....4	C1602	2203-005005	C-CER,CHIP;100nF,10%,16V,X7R,1608	1	SA
....4	C1604	2203-005005	C-CER,CHIP;100nF,10%,16V,X7R,1608	1	SA
....4	C1606	2203-005005	C-CER,CHIP;100nF,10%,16V,X7R,1608	1	SA
....4	C1607	2203-005005	C-CER,CHIP;100nF,10%,16V,X7R,1608	1	SA
....4	C1609	2203-005005	C-CER,CHIP;100nF,10%,16V,X7R,1608	1	SA
....4	C1611	2203-005005	C-CER,CHIP;100nF,10%,16V,X7R,1608	1	SA
....4	C1748	2203-005005	C-CER,CHIP;100nF,10%,16V,X7R,1608	1	SA
....4	C1749	2203-005005	C-CER,CHIP;100nF,10%,16V,X7R,1608	1	SA
....4	C1750	2203-005005	C-CER,CHIP;100nF,10%,16V,X7R,1608	1	SA
....4	C1751	2203-005005	C-CER,CHIP;100nF,10%,16V,X7R,1608	1	SA
....4	C1752	2203-005005	C-CER,CHIP;100nF,10%,16V,X7R,1608	1	SA
....4	C1753	2203-005005	C-CER,CHIP;100nF,10%,16V,X7R,1608	1	SA
....4	C1754	2203-005005	C-CER,CHIP;100nF,10%,16V,X7R,1608	1	SA
....4	C1755	2203-005005	C-CER,CHIP;100nF,10%,16V,X7R,1608	1	SA
....4	C1767	2203-005005	C-CER,CHIP;100nF,10%,16V,X7R,1608	1	SA
....4	C1771	2203-005005	C-CER,CHIP;100nF,10%,16V,X7R,1608	1	SA
....4	C1772	2203-005005	C-CER,CHIP;100nF,10%,16V,X7R,1608	1	SA
....4	C1773	2203-005005	C-CER,CHIP;100nF,10%,16V,X7R,1608	1	SA
....4	C1774	2203-005005	C-CER,CHIP;100nF,10%,16V,X7R,1608	1	SA
....4	C1775	2203-005005	C-CER,CHIP;100nF,10%,16V,X7R,1608	1	SA
....4	C1776	2203-005005	C-CER,CHIP;100nF,10%,16V,X7R,1608	1	SA
....4	C1777	2203-005005	C-CER,CHIP;100nF,10%,16V,X7R,1608	1	SA
....4	C1778	2203-005005	C-CER,CHIP;100nF,10%,16V,X7R,1608	1	SA
....4	C1779	2203-005005	C-CER,CHIP;100nF,10%,16V,X7R,1608	1	SA

Level	Loc. No.	Code No.	Description & Specification	Q'ty	SA/SNA
....4	C1780	2203-005005	C-CER,CHIP;100nF,10%,16V,X7R,1608	1	SA
....4	C1781	2203-005005	C-CER,CHIP;100nF,10%,16V,X7R,1608	1	SA
....4	C1782	2203-005005	C-CER,CHIP;100nF,10%,16V,X7R,1608	1	SA
....4	C1783	2203-005005	C-CER,CHIP;100nF,10%,16V,X7R,1608	1	SA
....4	C1784	2203-005005	C-CER,CHIP;100nF,10%,16V,X7R,1608	1	SA
....4	C1785	2203-005005	C-CER,CHIP;100nF,10%,16V,X7R,1608	1	SA
....4	C1786	2203-005005	C-CER,CHIP;100nF,10%,16V,X7R,1608	1	SA
....4	C1787	2203-005005	C-CER,CHIP;100nF,10%,16V,X7R,1608	1	SA
....4	C1788	2203-005005	C-CER,CHIP;100nF,10%,16V,X7R,1608	1	SA
....4	C1789	2203-005005	C-CER,CHIP;100nF,10%,16V,X7R,1608	1	SA
....4	C1790	2203-005005	C-CER,CHIP;100nF,10%,16V,X7R,1608	1	SA
....4	C1791	2203-005005	C-CER,CHIP;100nF,10%,16V,X7R,1608	1	SA
....4	C1792	2203-005005	C-CER,CHIP;100nF,10%,16V,X7R,1608	1	SA
....4	C1793	2203-005005	C-CER,CHIP;100nF,10%,16V,X7R,1608	1	SA
....4	C202	2203-005005	C-CER,CHIP;100nF,10%,16V,X7R,1608	1	SA
....4	C205	2203-005005	C-CER,CHIP;100nF,10%,16V,X7R,1608	1	SA
....4	C209	2203-005005	C-CER,CHIP;100nF,10%,16V,X7R,1608	1	SA
....4	C302	2203-005005	C-CER,CHIP;100nF,10%,16V,X7R,1608	1	SA
....4	C332	2203-005005	C-CER,CHIP;100nF,10%,16V,X7R,1608	1	SA
....4	C350	2203-005005	C-CER,CHIP;100nF,10%,16V,X7R,1608	1	SA
....4	C356	2203-005005	C-CER,CHIP;100nF,10%,16V,X7R,1608	1	SA
....4	C357	2203-005005	C-CER,CHIP;100nF,10%,16V,X7R,1608	1	SA
....4	C358	2203-005005	C-CER,CHIP;100nF,10%,16V,X7R,1608	1	SA
....4	C359	2203-005005	C-CER,CHIP;100nF,10%,16V,X7R,1608	1	SA
....4	C361	2203-005005	C-CER,CHIP;100nF,10%,16V,X7R,1608	1	SA
....4	C365	2203-005005	C-CER,CHIP;100nF,10%,16V,X7R,1608	1	SA
....4	C370	2203-005005	C-CER,CHIP;100nF,10%,16V,X7R,1608	1	SA
....4	C371	2203-005005	C-CER,CHIP;100nF,10%,16V,X7R,1608	1	SA
....4	C372	2203-005005	C-CER,CHIP;100nF,10%,16V,X7R,1608	1	SA
....4	C373	2203-005005	C-CER,CHIP;100nF,10%,16V,X7R,1608	1	SA
....4	C421	2203-005005	C-CER,CHIP;100nF,10%,16V,X7R,1608	1	SA
....4	C506	2203-005005	C-CER,CHIP;100nF,10%,16V,X7R,1608	1	SA
....4	C611	2203-005005	C-CER,CHIP;100nF,10%,16V,X7R,1608	1	SA
....4	C701	2203-005005	C-CER,CHIP;100nF,10%,16V,X7R,1608	1	SA
....4	C710	2203-005005	C-CER,CHIP;100nF,10%,16V,X7R,1608	1	SA
....4	C805	2203-005005	C-CER,CHIP;100nF,10%,16V,X7R,1608	1	SA
....4	C814	2203-005005	C-CER,CHIP;100nF,10%,16V,X7R,1608	1	SA
....4	C817	2203-005005	C-CER,CHIP;100nF,10%,16V,X7R,1608	1	SA
....4	C819	2203-005005	C-CER,CHIP;100nF,10%,16V,X7R,1608	1	SA
....4	C821	2203-005005	C-CER,CHIP;100nF,10%,16V,X7R,1608	1	SA
....4	C902	2203-005005	C-CER,CHIP;100nF,10%,16V,X7R,1608	1	SA
....4	C414	2203-005030	C-CER,CHIP;470nF,+80-20%,50V,Y5V,TP,3216	1	SA
....4	C423	2203-005030	C-CER,CHIP;470nF,+80-20%,50V,Y5V,TP,3216	1	SA
....4	C1001	2203-005065	C-CER,CHIP;1000nF,+80-20%,10V,Y5V,1608	1	SA
....4	C1002	2203-005065	C-CER,CHIP;1000nF,+80-20%,10V,Y5V,1608	1	SA
....4	C1004	2203-005065	C-CER,CHIP;1000nF,+80-20%,10V,Y5V,1608	1	SA
....4	C1008	2203-005065	C-CER,CHIP;1000nF,+80-20%,10V,Y5V,1608	1	SA
....4	C1013	2203-005065	C-CER,CHIP;1000nF,+80-20%,10V,Y5V,1608	1	SA
....4	C1017	2203-005065	C-CER,CHIP;1000nF,+80-20%,10V,Y5V,1608	1	SA
....4	C1024	2203-005065	C-CER,CHIP;1000nF,+80-20%,10V,Y5V,1608	1	SA
....4	C1025	2203-005065	C-CER,CHIP;1000nF,+80-20%,10V,Y5V,1608	1	SA
....4	C122	2203-005065	C-CER,CHIP;1000nF,+80-20%,10V,Y5V,1608	1	SA
....4	C212	2203-005065	C-CER,CHIP;1000nF,+80-20%,10V,Y5V,1608	1	SA
....4	C425	2203-005065	C-CER,CHIP;1000nF,+80-20%,10V,Y5V,1608	1	SA
....4	C402	2203-005249	C-CER,CHIP;100nF,10%,50V,X7R,1608	1	SA
....4	C406	2203-005249	C-CER,CHIP;100nF,10%,50V,X7R,1608	1	SA
....4	C408	2203-005249	C-CER,CHIP;100nF,10%,50V,X7R,1608	1	SA
....4	C410	2203-005249	C-CER,CHIP;100nF,10%,50V,X7R,1608	1	SA
....4	C415	2203-005249	C-CER,CHIP;100nF,10%,50V,X7R,1608	1	SA
....4	C416	2203-005249	C-CER,CHIP;100nF,10%,50V,X7R,1608	1	SA
....4	C417	2203-005249	C-CER,CHIP;100nF,10%,50V,X7R,1608	1	SA
....4	C418	2203-005249	C-CER,CHIP;100nF,10%,50V,X7R,1608	1	SA
....4	C419	2203-005249	C-CER,CHIP;100nF,10%,50V,X7R,1608	1	SA
....4	C420	2203-005249	C-CER,CHIP;100nF,10%,50V,X7R,1608	1	SA
....4	C424	2203-005249	C-CER,CHIP;100nF,10%,50V,X7R,1608	1	SA
....4	C426	2203-005249	C-CER,CHIP;100nF,10%,50V,X7R,1608	1	SA
....4	C427	2203-005249	C-CER,CHIP;100nF,10%,50V,X7R,1608	1	SA
....4	C430	2203-005249	C-CER,CHIP;100nF,10%,50V,X7R,1608	1	SA
....4	C436	2203-005249	C-CER,CHIP;100nF,10%,50V,X7R,1608	1	SA
....4	C530	2203-005249	C-CER,CHIP;100nF,10%,50V,X7R,1608	1	SA
....4	C362	2203-005533	C-CER,CHIP;1000nF,20%,6.3V,X7R,TP,1608	1	SA
....4	C367	2203-005533	C-CER,CHIP;1000nF,20%,6.3V,X7R,TP,1608	1	SA

Level	Loc. No.	Code No.	Description & Specification	Q'ty	SA/SNA
....4	C1031	2203-006333	C-CER,CHIP;10000nF,20%,16V,X5R,TP,3216	1	SA
....4	C1032	2203-006333	C-CER,CHIP;10000nF,20%,16V,X5R,TP,3216	1	SA
....4	C1102	2203-006333	C-CER,CHIP;10000nF,20%,16V,X5R,TP,3216	1	SA
....4	C1105	2203-006333	C-CER,CHIP;10000nF,20%,16V,X5R,TP,3216	1	SA
....4	C1109	2203-006333	C-CER,CHIP;10000nF,20%,16V,X5R,TP,3216	1	SA
....4	C1110	2203-006333	C-CER,CHIP;10000nF,20%,16V,X5R,TP,3216	1	SA
....4	C1114	2203-006333	C-CER,CHIP;10000nF,20%,16V,X5R,TP,3216	1	SA
....4	C1115	2203-006333	C-CER,CHIP;10000nF,20%,16V,X5R,TP,3216	1	SA
....4	C1118	2203-006333	C-CER,CHIP;10000nF,20%,16V,X5R,TP,3216	1	SA
....4	C1119	2203-006333	C-CER,CHIP;10000nF,20%,16V,X5R,TP,3216	1	SA
....4	C1122	2203-006333	C-CER,CHIP;10000nF,20%,16V,X5R,TP,3216	1	SA
....4	C1124	2203-006333	C-CER,CHIP;10000nF,20%,16V,X5R,TP,3216	1	SA
....4	C1130	2203-006333	C-CER,CHIP;10000nF,20%,16V,X5R,TP,3216	1	SA
....4	C1132	2203-006333	C-CER,CHIP;10000nF,20%,16V,X5R,TP,3216	1	SA
....4	C1138	2203-006333	C-CER,CHIP;10000nF,20%,16V,X5R,TP,3216	1	SA
....4	C1139	2203-006333	C-CER,CHIP;10000nF,20%,16V,X5R,TP,3216	1	SA
....4	C1142	2203-006333	C-CER,CHIP;10000nF,20%,16V,X5R,TP,3216	1	SA
....4	C1143	2203-006333	C-CER,CHIP;10000nF,20%,16V,X5R,TP,3216	1	SA
....4	C1146	2203-006333	C-CER,CHIP;10000nF,20%,16V,X5R,TP,3216	1	SA
....4	C1316	2203-006333	C-CER,CHIP;10000nF,20%,16V,X5R,TP,3216	1	SA
....4	C1402	2203-006333	C-CER,CHIP;10000nF,20%,16V,X5R,TP,3216	1	SA
....4	C1608	2203-006333	C-CER,CHIP;10000nF,20%,16V,X5R,TP,3216	1	SA
....4	C1610	2203-006333	C-CER,CHIP;10000nF,20%,16V,X5R,TP,3216	1	SA
....4	C1766	2203-006333	C-CER,CHIP;10000nF,20%,16V,X5R,TP,3216	1	SA
....4	C1768	2203-006333	C-CER,CHIP;10000nF,20%,16V,X5R,TP,3216	1	SA
....4	C1769	2203-006333	C-CER,CHIP;10000nF,20%,16V,X5R,TP,3216	1	SA
....4	C1770	2203-006333	C-CER,CHIP;10000nF,20%,16V,X5R,TP,3216	1	SA
....4	C201	2203-006333	C-CER,CHIP;10000nF,20%,16V,X5R,TP,3216	1	SA
....4	C204	2203-006333	C-CER,CHIP;10000nF,20%,16V,X5R,TP,3216	1	SA
....4	C303	2203-006333	C-CER,CHIP;10000nF,20%,16V,X5R,TP,3216	1	SA
....4	C304	2203-006333	C-CER,CHIP;10000nF,20%,16V,X5R,TP,3216	1	SA
....4	C305	2203-006333	C-CER,CHIP;10000nF,20%,16V,X5R,TP,3216	1	SA
....4	C306	2203-006333	C-CER,CHIP;10000nF,20%,16V,X5R,TP,3216	1	SA
....4	C307	2203-006333	C-CER,CHIP;10000nF,20%,16V,X5R,TP,3216	1	SA
....4	C308	2203-006333	C-CER,CHIP;10000nF,20%,16V,X5R,TP,3216	1	SA
....4	C309	2203-006333	C-CER,CHIP;10000nF,20%,16V,X5R,TP,3216	1	SA
....4	C310	2203-006333	C-CER,CHIP;10000nF,20%,16V,X5R,TP,3216	1	SA
....4	C347	2203-006333	C-CER,CHIP;10000nF,20%,16V,X5R,TP,3216	1	SA
....4	C409	2203-006333	C-CER,CHIP;10000nF,20%,16V,X5R,TP,3216	1	SA
....4	C411	2203-006333	C-CER,CHIP;10000nF,20%,16V,X5R,TP,3216	1	SA
....4	C524	2203-006333	C-CER,CHIP;10000nF,20%,16V,X5R,TP,3216	1	SA
....4	C537	2203-006333	C-CER,CHIP;10000nF,20%,16V,X5R,TP,3216	1	SA
....4	C538	2203-006333	C-CER,CHIP;10000nF,20%,16V,X5R,TP,3216	1	SA
....4	C612	2203-006333	C-CER,CHIP;10000nF,20%,16V,X5R,TP,3216	1	SA
....4	C702	2203-006333	C-CER,CHIP;10000nF,20%,16V,X5R,TP,3216	1	SA
....4	C801	2203-006333	C-CER,CHIP;10000nF,20%,16V,X5R,TP,3216	1	SA
....4	C803	2203-006333	C-CER,CHIP;10000nF,20%,16V,X5R,TP,3216	1	SA
....4	C812	2203-006333	C-CER,CHIP;10000nF,20%,16V,X5R,TP,3216	1	SA
....4	C815	2203-006333	C-CER,CHIP;10000nF,20%,16V,X5R,TP,3216	1	SA
....4	C816	2203-006333	C-CER,CHIP;10000nF,20%,16V,X5R,TP,3216	1	SA
....4	C820	2203-006333	C-CER,CHIP;10000nF,20%,16V,X5R,TP,3216	1	SA
....4	C822	2203-006333	C-CER,CHIP;10000nF,20%,16V,X5R,TP,3216	1	SA
....4	C1012	2402-000209	C-AL,SMD;22uF,20%,16V,WT,TP,5.3x5.3mm	1	SA
....4	C108	2402-000209	C-AL,SMD;22uF,20%,16V,WT,TP,5.3x5.3mm	1	SA
....4	C110	2402-000209	C-AL,SMD;22uF,20%,16V,WT,TP,5.3x5.3mm	1	SA
....4	C1106	2402-000209	C-AL,SMD;22uF,20%,16V,WT,TP,5.3x5.3mm	1	SA
....4	C120	2402-000209	C-AL,SMD;22uF,20%,16V,WT,TP,5.3x5.3mm	1	SA
....4	C130	2402-000209	C-AL,SMD;22uF,20%,16V,WT,TP,5.3x5.3mm	1	SA
....4	C1301	2402-000209	C-AL,SMD;22uF,20%,16V,WT,TP,5.3x5.3mm	1	SA
....4	C137	2402-000209	C-AL,SMD;22uF,20%,16V,WT,TP,5.3x5.3mm	1	SA
....4	C138	2402-000209	C-AL,SMD;22uF,20%,16V,WT,TP,5.3x5.3mm	1	SA
....4	C1407	2402-000209	C-AL,SMD;22uF,20%,16V,WT,TP,5.3x5.3mm	1	SA
....4	C1408	2402-000209	C-AL,SMD;22uF,20%,16V,WT,TP,5.3x5.3mm	1	SA
....4	C1412	2402-000209	C-AL,SMD;22uF,20%,16V,WT,TP,5.3x5.3mm	1	SA
....4	C154	2402-000209	C-AL,SMD;22uF,20%,16V,WT,TP,5.3x5.3mm	1	SA
....4	C1794	2402-000209	C-AL,SMD;22uF,20%,16V,WT,TP,5.3x5.3mm	1	SA
....4	C366	2402-000209	C-AL,SMD;22uF,20%,16V,WT,TP,5.3x5.3mm	1	SA
....4	C503	2402-000209	C-AL,SMD;22uF,20%,16V,WT,TP,5.3x5.3mm	1	SA
....4	C516	2402-000209	C-AL,SMD;22uF,20%,16V,WT,TP,5.3x5.3mm	1	SA
....4	C911	2402-000209	C-AL,SMD;22uF,20%,16V,WT,TP,5.3x5.3mm	1	SA
....4	C1011	2402-001086	C-AL,SMD;100UF,20%,16V,WT,TP,6.6X6.6X5.3	1	SA
....4	C1103	2402-001086	C-AL,SMD;100UF,20%,16V,WT,TP,6.6X6.6X5.3	1	SA

Level	Loc. No.	Code No.	Description & Specification	Q'ty	SA/SNA
....4	C115	2402-001086	C-AL,SMD;100UF,20%,16V,WT,TP,6.6X6.6X5.3	1	SA
....4	C1213	2402-001086	C-AL,SMD;100UF,20%,16V,WT,TP,6.6X6.6X5.3	1	SA
....4	C1214	2402-001086	C-AL,SMD;100UF,20%,16V,WT,TP,6.6X6.6X5.3	1	SA
....4	C1215	2402-001086	C-AL,SMD;100UF,20%,16V,WT,TP,6.6X6.6X5.3	1	SA
....4	C1404	2402-001086	C-AL,SMD;100UF,20%,16V,WT,TP,6.6X6.6X5.3	1	SA
....4	C1503	2402-001086	C-AL,SMD;100UF,20%,16V,WT,TP,6.6X6.6X5.3	1	SA
....4	C1504	2402-001086	C-AL,SMD;100UF,20%,16V,WT,TP,6.6X6.6X5.3	1	SA
....4	C151	2402-001086	C-AL,SMD;100UF,20%,16V,WT,TP,6.6X6.6X5.3	1	SA
....4	C156	2402-001086	C-AL,SMD;100UF,20%,16V,WT,TP,6.6X6.6X5.3	1	SA
....4	C1601	2402-001086	C-AL,SMD;100UF,20%,16V,WT,TP,6.6X6.6X5.3	1	SA
....4	C1795	2402-001086	C-AL,SMD;100UF,20%,16V,WT,TP,6.6X6.6X5.3	1	SA
....4	C360	2402-001086	C-AL,SMD;100UF,20%,16V,WT,TP,6.6X6.6X5.3	1	SA
....4	C363	2402-001086	C-AL,SMD;100UF,20%,16V,WT,TP,6.6X6.6X5.3	1	SA
....4	C505	2402-001086	C-AL,SMD;100UF,20%,16V,WT,TP,6.6X6.6X5.3	1	SA
....4	C507	2402-001086	C-AL,SMD;100UF,20%,16V,WT,TP,6.6X6.6X5.3	1	SA
....4	C1220	2402-001097	C-AL,SMD;0.1UF,20%,50V,WT,TP,4.3X4.3X5.2	1	SA
....4	C1221	2402-001097	C-AL,SMD;0.1UF,20%,50V,WT,TP,4.3X4.3X5.2	1	SA
....4	C1151	2402-001128	C-AL,SMD;100UF,20%,16V,WT,TP,6.3X5.7MM	1	SA
....4	C1154	2402-001128	C-AL,SMD;100UF,20%,16V,WT,TP,6.3X5.7MM	1	SA
....4	C1155	2402-001128	C-AL,SMD;100UF,20%,16V,WT,TP,6.3X5.7MM	1	SA
....4	C123	2402-001128	C-AL,SMD;100UF,20%,16V,WT,TP,6.3X5.7MM	1	SA
....4	C133	2402-001128	C-AL,SMD;100UF,20%,16V,WT,TP,6.3X5.7MM	1	SA
....4	C1702	2402-001128	C-AL,SMD;100UF,20%,16V,WT,TP,6.3X5.7MM	1	SA
....4	C1703	2402-001128	C-AL,SMD;100UF,20%,16V,WT,TP,6.3X5.7MM	1	SA
....4	C1704	2402-001128	C-AL,SMD;100UF,20%,16V,WT,TP,6.3X5.7MM	1	SA
....4	C1745	2402-001128	C-AL,SMD;100UF,20%,16V,WT,TP,6.3X5.7MM	1	SA
....4	C1746	2402-001128	C-AL,SMD;100UF,20%,16V,WT,TP,6.3X5.7MM	1	SA
....4	C314	2402-001128	C-AL,SMD;100UF,20%,16V,WT,TP,6.3X5.7MM	1	SA
....4	C375	2402-001128	C-AL,SMD;100UF,20%,16V,WT,TP,6.3X5.7MM	1	SA
....4	C519	2402-001128	C-AL,SMD;100UF,20%,16V,WT,TP,6.3X5.7MM	1	SA
....4	C312	2402-001129	C-AL,SMD;47UF,20%,16V,WT,TP,6.3X5.2MM	1	SA
....4	C321	2402-001129	C-AL,SMD;47UF,20%,16V,WT,TP,6.3X5.2MM	1	SA
....4	C330	2402-001129	C-AL,SMD;47UF,20%,16V,WT,TP,6.3X5.2MM	1	SA
....4	C341	2402-001129	C-AL,SMD;47UF,20%,16V,WT,TP,6.3X5.2MM	1	SA
....4	C374	2402-001129	C-AL,SMD;47UF,20%,16V,WT,TP,6.3X5.2MM	1	SA
....4	C529	2402-001147	C-AL,SMD;3.3UF,20%,50V,WT,TP,4X5.8MM	1	SA
....4	C1028	2402-001155	C-AL,SMD;47UF,20%,16V,WT,TP,6.3X5.2MM	1	SA
....4	C1029	2402-001155	C-AL,SMD;47UF,20%,16V,WT,TP,6.3X5.2MM	1	SA
....4	C708	2402-001155	C-AL,SMD;47UF,20%,16V,WT,TP,6.3X5.2MM	1	SA
....4	C369	2402-001160	C-AL,SMD;330UF,20%,16V,WT,TP,1008	1	SA
....4	C311	2402-001178	C-AL,SMD;10uF,20%,16V,WT,TP,4.3x4.3x5.8m	1	SA
....4	C317	2402-001178	C-AL,SMD;10uF,20%,16V,WT,TP,4.3x4.3x5.8m	1	SA
....4	C339	2402-001178	C-AL,SMD;10uF,20%,16V,WT,TP,4.3x4.3x5.8m	1	SA
....4	C343	2402-001178	C-AL,SMD;10uF,20%,16V,WT,TP,4.3x4.3x5.8m	1	SA
....4	C349	2402-001178	C-AL,SMD;10uF,20%,16V,WT,TP,4.3x4.3x5.8m	1	SA
....4	C351	2402-001178	C-AL,SMD;10uF,20%,16V,WT,TP,4.3x4.3x5.8m	1	SA
....4	C301	2402-001183	C-AL,SMD;22UF,20%,16V,WT,TP,5.3X5.3X6MM	1	SA
....4	C328	2402-001183	C-AL,SMD;22UF,20%,16V,WT,TP,5.3X5.3X6MM	1	SA
....4	C1701	2402-001210	C-POLYMER AL CHIP;100uF,20%,10V,WT,TP,7.	1	SA
....4	C1410	2402-001226	C-AL,SMD;4.7UF,20%,35V,HR,TP,4.3X4.3X5.8	1	SA
....4	C1411	2402-001226	C-AL,SMD;4.7UF,20%,35V,HR,TP,4.3X4.3X5.8	1	SA
....4	C1413	2402-001226	C-AL,SMD;4.7UF,20%,35V,HR,TP,4.3X4.3X5.8	1	SA
....4	C1414	2402-001226	C-AL,SMD;4.7UF,20%,35V,HR,TP,4.3X4.3X5.8	1	SA
....4	C1517	2402-001230	C-AL,SMD;2.2uF,¡¾20%,35V,WT,TP,3*5.2	1	SA
....4	C337	2402-001238	C-AL,SMD;1uF,20%,50V,HR,TP,4.3x4.3x5.2mm	1	SA
....4	C338	2402-001238	C-AL,SMD;1uF,20%,50V,HR,TP,4.3x4.3x5.2mm	1	SA
....4	C346	2402-001238	C-AL,SMD;1uF,20%,50V,HR,TP,4.3x4.3x5.2mm	1	SA
....4	C348	2402-001238	C-AL,SMD;1uF,20%,50V,HR,TP,4.3x4.3x5.2mm	1	SA
....4	C534	2402-001238	C-AL,SMD;1uF,20%,50V,HR,TP,4.3x4.3x5.2mm	1	SA
....4	C401	2402-001257	C-AL,SMD;470uF,20%,16V,-,TP,8.3*10	1	SA
....4	C435	2402-001257	C-AL,SMD;470uF,20%,16V,-,TP,8.3*10	1	SA
....4	C1311	2402-001262	C-AL,SMD;47uF,+-20%,6.3V,WT,SMD,5x5.2	1	SA
....4	C128	2409-001029	C-ORGANIC;120uF,20%,6.3V,WT,TP,10.3x10.3	1	SA
....4	C135	2409-001029	C-ORGANIC;120uF,20%,6.3V,WT,TP,10.3x10.3	1	SA
....4	C364	2409-001029	C-ORGANIC;120uF,20%,6.3V,WT,TP,10.3x10.3	1	SA
....4	C518	2409-001118	C-POLYMER ,CHIP;47uF,-+20,10V,WT,REEL,3.	1	SA
....4	T0052	2703-000158	INDUCTOR-SMD;1uH,10%,2012	1	SA
....4	T0052	2703-000398	INDUCTOR-SMD;10uH,10%,3225	1	SA
....4	T0052	2703-000398	INDUCTOR-SMD;10uH,10%,3225	1	SA
....4	T0052	2703-000398	INDUCTOR-SMD;10uH,10%,3225	1	SA
....4	T0052	2703-000398	INDUCTOR-SMD;10uH,10%,3225	1	SA
....4	T0052	2703-000398	INDUCTOR-SMD;10uH,10%,3225	1	SA

Level	Loc. No.	Code No.	Description & Specification	Q'ty	SA/SNA
....4	T0052	2703-000398	INDUCTOR-SMD;10uH,10%,3225	1	SA
....4	T0052	2703-000398	INDUCTOR-SMD;10uH,10%,3225	1	SA
....4	T0052	2703-000398	INDUCTOR-SMD;10uH,10%,3225	1	SA
....4	T0052	2703-000398	INDUCTOR-SMD;10uH,10%,3225	1	SA
....4	T0052	2703-000398	INDUCTOR-SMD;10uH,10%,3225	1	SA
....4	T0052	2703-000398	INDUCTOR-SMD;10uH,10%,3225	1	SA
....4	T0052	2703-000398	INDUCTOR-SMD;10uH,10%,3225	1	SA
....4	T0052	2703-000398	INDUCTOR-SMD;10uH,10%,3225	1	SA
....4	T0052	2703-000398	INDUCTOR-SMD;10uH,10%,3225	1	SA
....4	T0052	2703-000398	INDUCTOR-SMD;10uH,10%,3225	1	SA
....4	T0052	2703-000398	INDUCTOR-SMD;10uH,10%,3225	1	SA
....4	T0052	2703-000398	INDUCTOR-SMD;10uH,10%,3225	1	SA
....4	T0052	2703-000398	INDUCTOR-SMD;10uH,10%,3225	1	SA
....4	T0052	2703-000398	INDUCTOR-SMD;10uH,10%,3225	1	SA
....4	T0052	2703-000417	INDUCTOR-SMD;220uH,5%,3225	1	SA
....4	T0052	2703-001426	INDUCTOR-SMD;680uH,20%,7070	1	SA
....4	T0052	2703-001778	INDUCTOR-SMD;3.3uH,20%,3225	1	SA
....4	T0052	2703-001778	INDUCTOR-SMD;3.3uH,20%,3225	1	SA
....4	T0052	2703-002915	INDUCTOR-SMD;22uH,20%,8080	1	SA
....4	T0052	2703-002915	INDUCTOR-SMD;22uH,20%,8080	1	SA
....4	T0052	2703-002915	INDUCTOR-SMD;22uH,20%,8080	1	SA
....4	T0052	2703-002915	INDUCTOR-SMD;22uH,20%,8080	1	SA
....4	X1301	2801-000258	CRYSTAL-SMD;0.032768MHz,20ppm,SMD,12.5pF	1	SA
....4	X201	2801-003326	CRYSTAL-SMD;24MHZ,30PPM,28-ABX,20PF,50OH	1	SA
....4	X301	2801-003954	CRYSTAL-SMD;27MHz,30ppm,28-AAN,16pF,50oh	1	SA
....4	X901	2801-004483	CRYSTAL-SMD;28.322MHz,30ppm,HC-49,20pF,5	1	SA
....4	X1302	2804-001370	OSCILLATOR-CLOCK;48MHz,100ppm,10TTL/CMOS	1	SA
....4	X1303	2806-001308	OSCILLATOR-VCXO;27MHZ,-,30PF,TP,3.3V,50M	1	SA
....4	F103	2901-001114	FILTER-EMI SMD;25VDC,2.0ADC,-,100nF,3.2x	1	SA
....4	T0568	3301-001082	BEAD-SMD;60ohm,3225,TP,43ohm/40MHz,83ohm	1	SNA
....4	T0568	3301-001145	BEAD-SMD;60ohm,4516,TP,70ohm/45MHz,82ohm	1	SNA
....4	T0568	3301-001145	BEAD-SMD;60ohm,4516,TP,70ohm/45MHz,82ohm	1	SNA
....4	T0568	3301-001145	BEAD-SMD;60ohm,4516,TP,70ohm/45MHz,82ohm	1	SNA
....4	T0568	3301-001145	BEAD-SMD;60ohm,4516,TP,70ohm/45MHz,82ohm	1	SNA
....4	T0568	3301-001145	BEAD-SMD;60ohm,4516,TP,70ohm/45MHz,82ohm	1	SNA
....4	T0568	3301-001145	BEAD-SMD;60ohm,4516,TP,70ohm/45MHz,82ohm	1	SNA
....4	T0568	3301-001145	BEAD-SMD;60ohm,4516,TP,70ohm/45MHz,82ohm	1	SNA
....4	T0568	3301-001145	BEAD-SMD;60ohm,4516,TP,70ohm/45MHz,82ohm	1	SNA
....4	T0568	3301-001145	BEAD-SMD;60ohm,4516,TP,70ohm/45MHz,82ohm	1	SNA
....4	T0568	3301-001145	BEAD-SMD;60ohm,4516,TP,70ohm/45MHz,82ohm	1	SNA
....4	T0568	3301-001145	BEAD-SMD;60ohm,4516,TP,70ohm/45MHz,82ohm	1	SNA
....4	T0568	3301-001145	BEAD-SMD;60ohm,4516,TP,70ohm/45MHz,82ohm	1	SNA
....4	T0568	3301-001236	BEAD-SMD;60ohm,1608,-,-,-	1	SNA
....4	T0568	3301-001236	BEAD-SMD;60ohm,1608,-,-,-	1	SNA
....4	T0568	3301-001236	BEAD-SMD;60ohm,1608,-,-,-	1	SNA
....4	T0568	3301-001236	BEAD-SMD;60ohm,1608,-,-,-	1	SNA
....4	T0568	3301-001236	BEAD-SMD;60ohm,1608,-,-,-	1	SNA
....4	T0568	3301-001236	BEAD-SMD;60ohm,1608,-,-,-	1	SNA
....4	T0568	3301-001236	BEAD-SMD;60ohm,1608,-,-,-	1	SNA
....4	T0568	3301-001236	BEAD-SMD;60ohm,1608,-,-,-	1	SNA
....4	T0568	3301-001404	BEAD-SMD;30ohm,2012,TP,-,-	1	SA
....4	T0568	3301-001404	BEAD-SMD;30ohm,2012,TP,-,-	1	SA
....4	T0568	3301-001404	BEAD-SMD;30ohm,2012,TP,-,-	1	SA
....4	T0568	3301-001404	BEAD-SMD;30ohm,2012,TP,-,-	1	SA
....4	T0568	3301-001404	BEAD-SMD;30ohm,2012,TP,-,-	1	SA
....4	T0568	3301-001404	BEAD-SMD;30ohm,2012,TP,-,-	1	SA
....4	T0568	3301-001404	BEAD-SMD;30ohm,2012,TP,-,-	1	SA
....4	T0568	3301-001404	BEAD-SMD;30ohm,2012,TP,-,-	1	SA
....4	T0568	3301-001404	BEAD-SMD;30ohm,2012,TP,-,-	1	SA
....4	T0568	3301-001404	BEAD-SMD;30ohm,2012,TP,-,-	1	SA
....4	T0568	3301-001404	BEAD-SMD;30ohm,2012,TP,-,-	1	SA
....4	T0568	3301-001404	BEAD-SMD;30ohm,2012,TP,-,-	1	SA
....4	T0568	3301-001404	BEAD-SMD;30ohm,2012,TP,-,-	1	SA
....4	T0568	3301-001404	BEAD-SMD;30ohm,2012,TP,-,-	1	SA
....4	T0568	3301-001404	BEAD-SMD;30ohm,2012,TP,-,-	1	SA
....4	T0568	3301-001404	BEAD-SMD;30ohm,2012,TP,-,-	1	SA
....4	T0568	3301-001404	BEAD-SMD;30ohm,2012,TP,-,-	1	SA
....4	T0568	3301-001404	BEAD-SMD;30ohm,2012,TP,-,-	1	SA
....4	T0568	3301-001404	BEAD-SMD;30ohm,2012,TP,-,-	1	SA
....4	T0568	3301-001404	BEAD-SMD;30ohm,2012,TP,-,-	1	SA
....4	T0568	3301-001404	BEAD-SMD;30ohm,2012,TP,-,-	1	SA
....4	T0568	3301-001404	BEAD-SMD;30ohm,2012,TP,-,-	1	SA
....4	T0568	3301-001404	BEAD-SMD;30ohm,2012,TP,-,-	1	SA
....4	T0568	3301-001404	BEAD-SMD;30ohm,2012,TP,-,-	1	SA
....4	T0568	3301-001404	BEAD-SMD;30ohm,2012,TP,-,-	1	SA
....4	T0568	3301-001404	BEAD-SMD;30ohm,2012,TP,-,-	1	SA
....4	T0568	3301-001404	BEAD-SMD;30ohm,2012,TP,-,-	1	SA
....4	T0568	3301-001404	BEAD-SMD;30ohm,2012,TP,-,-	1	SA
....4	T0568	3301-001404	BEAD-SMD;30ohm,2012,TP,-,-	1	SA
....4	T0568	3301-001404	BEAD-SMD;30ohm,2012,TP,-,-	1	SA

Level	Loc. No.	Code No.	Description & Specification	Q'ty	SA/SNA
....4	T0568	3301-001404	BEAD-SMD;30ohm,2012,TP,-,-	1	SA
....4	T0568	3301-001404	BEAD-SMD;30ohm,2012,TP,-,-	1	SA
....4	T0568	3301-001404	BEAD-SMD;30ohm,2012,TP,-,-	1	SA
....4	T0568	3301-001404	BEAD-SMD;30ohm,2012,TP,-,-	1	SA
....4	T0568	3301-001404	BEAD-SMD;30ohm,2012,TP,-,-	1	SA
....4	T0568	3301-001404	BEAD-SMD;30ohm,2012,TP,-,-	1	SA
....4	T0568	3301-001404	BEAD-SMD;30ohm,2012,TP,-,-	1	SA
....4	T0568	3301-001569	BEAD-SMD;600ohm,2012,1000mA,TP,520ohm/90	1	SNA
....4	JA802	3701-001311	CONNECTOR-HDMI;21P,2R,FEMALE,SMD-S,AU30U	1	SA
....4	JA804	3701-001311	CONNECTOR-HDMI;21P,2R,FEMALE,SMD-S,AU30U	1	SA
....4	CN330	3711-005291	HEADER-BOARD TO CABLE;BOX,2P,1R,2MM,SMD-	1	SA
....4	CN330	3711-005292	HEADER-BOARD TO CABLE;BOX,3P,1R,2MM,SMD-	1	SA
....4	CN330	3711-005497	HEADER-BOARD TO CABLE;BOX,15P,1R,1.25MM,	1	SA
....4	CN330	3711-005499	HEADER-BOARD TO CABLE;BOX,8P,1R,1.25mm,S	1	SA
....4	L101	BN27-00008A	COIL CHOKE-SMD;SMD12*12*8.5,GH15/17PS,22	1	SA
....4	L102	BN27-00008A	COIL CHOKE-SMD;SMD12*12*8.5,GH15/17PS,22	1	SA
....4	MAIN	BN97-00965A	ASSY MICOM-AMZ;T_BORDNUS0-1022,LN-S2641D	1	SNA
.....5	IC115	1107-001228	IC-FLASH MEMORY;28F640,64Mbit,8Mx8/4Mx16	1	SA
....4	SUB	BN97-00965D	ASSY MICOM-AMZ;T-BORDNUS5-1000,LNS2641,0	1	SNA
.....5	IC520	0903-001389	IC-MICROCONTROLLER;S3F866B,8Bit,QFP,44P,	1	SNA
....4	T0077	BN41-00679B	PCB MAIN;FR-4,4,0.1,1.486,240x192	1	SNA
....4	T0087	1203-003952	IC-POSI.FIXED REG.;KA7805ERTM,DPAK,3P,6.	1	SA
....4	IC104	0801-002198	IC-CMOS LOGIC;74LVC14,INVERTER,SOP,14P,1	1	SA
....4	C106	2402-001268	C-AL,SMD;100uF,+-20%,25V,WT,REEL,8x6.3	1	SA
....4	C112	2402-001268	C-AL,SMD;100uF,+-20%,25V,WT,REEL,8x6.3	1	SA
....4	C113	2402-001268	C-AL,SMD;100uF,+-20%,25V,WT,REEL,8x6.3	1	SA
....4	C119	2402-001268	C-AL,SMD;100uF,+-20%,25V,WT,REEL,8x6.3	1	SA
....4	C140	2409-001065	C-ORGANIC;82uF,20%,16V,WT,TP,8X6.9mm,-	1	SA
....4	C160	2409-001065	C-ORGANIC;82uF,20%,16V,WT,TP,8X6.9mm,-	1	SA
....4	IC112	1103-001385	IC-EEPROM;24C256,256Kbit,32Kx8,SOP,8P,5x	1	SA
...3	T0568	BP39-00217A	CBF IF;HLR5668WAX,1PIN,1365#26,80mm,BK,D	1	SA
...3	T0066	BP62-00047B	HEAT SINK-ES;MU15UO,A6063S,T2.5,13,13,TA	1	SNA
...3	T0066	BP62-00017A	HEAT SINK-ES;SP-50L2HX,A6063S,T2.0,26.2,	1	SNA
1	M0003	BN92-01699C	ASSY BOX;40T70,UO(XAP),SONOMA	1	SNA
..2		BN69-01310A	BOX-01,SET;40T7,DY-01,AB,YEL,A1,W1205,D8	1.01	SNA
1	M0113	BN92-01702A	ASSY P/MATERIAL;40T70,SONOMA	1	SNA
..2	T0376	6902-000061	BAG AIR;LDPE,T0.2,L1000,W500,TRP,,,	0.061	SNA
..2	T0376	6902-000379	BAG AIR;LDPE,T0.2,W1000,L1800,TRP,-,--	0.018	SNA
..2	T0081	6902-000604	BAG WRAPPING;LDPE,T0.02,W500,L10000,TRP,	14.32	SNA
..2	T0524	6902-000411	BAG PE;HDPE/NITRON,T0.015/T0.5,W1300,L13	1	SNA
1	M0019	BN92-01801K	ASSY LABEL;LNS4041DX/XAA	1	SNA
1	M0045	BN92-01867D	ASSY ACCESSORY;LNS4041WX/XAP	1	SNA
..2	M0045	BN96-03700Q	ASSY ACCESSORY;LNS4041DX/XAP	1	SA
...3	T0268	3903-000144	CBF-POWER CORD;DT,US,BP3/Y,U(IEC C13-RA)	1	SA
...3	T0524	6902-000110	BAG PE;LDPE,T0.05,W250,L400,TRP,28,2	2	SNA
...3	T0238	AA68-03727A	MANUAL FLYER-WARRANTY CARD;All,SAMSUNG,S	1	SNA
...3	T0074	BN59-00511A	REMOCON;Bordeaux,TM87B,SAMSUNG 28P+EEPRO	1	SA
...3	T0531	BN63-02416A	COVER-BOTTOM;SONOMA 40,HIPS,V0,BK500	1	SNA
...3	M0284	BN68-01001A	MANUAL USERS-02;COMM,SAMSUNG,3Langs,N.Am	1	SNA
...3	ACCESSORY	BN68-01003A	MANUAL FLYER-QSG(01);COMM,SAMSUNG,Englis	1	SNA
...3	ACCESSORY	BN69-01052A	BOX ACCESSORY-00;ALL,CB-SW1,YEL,W603,D67	1	SNA
...3	ACCESSORY	AA68-03242F	MANUAL FLYER-01,SAFETY GUIDE;All Model,S	1	SNA

7 Block Diagram

- This Document can not be used without Samsung's authorization

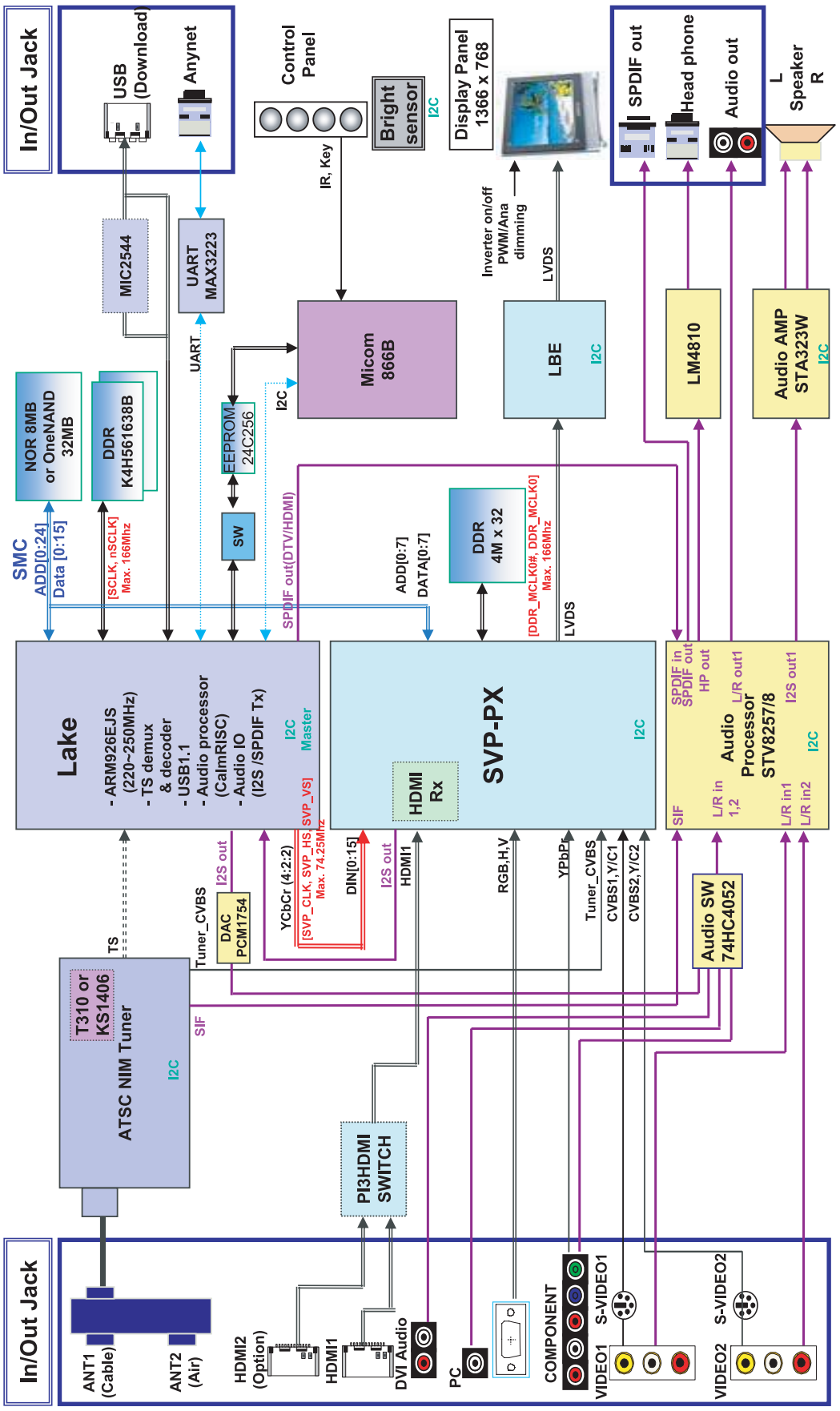

Memo

8 Wiring Diagram

8-1 Wiring Diagram

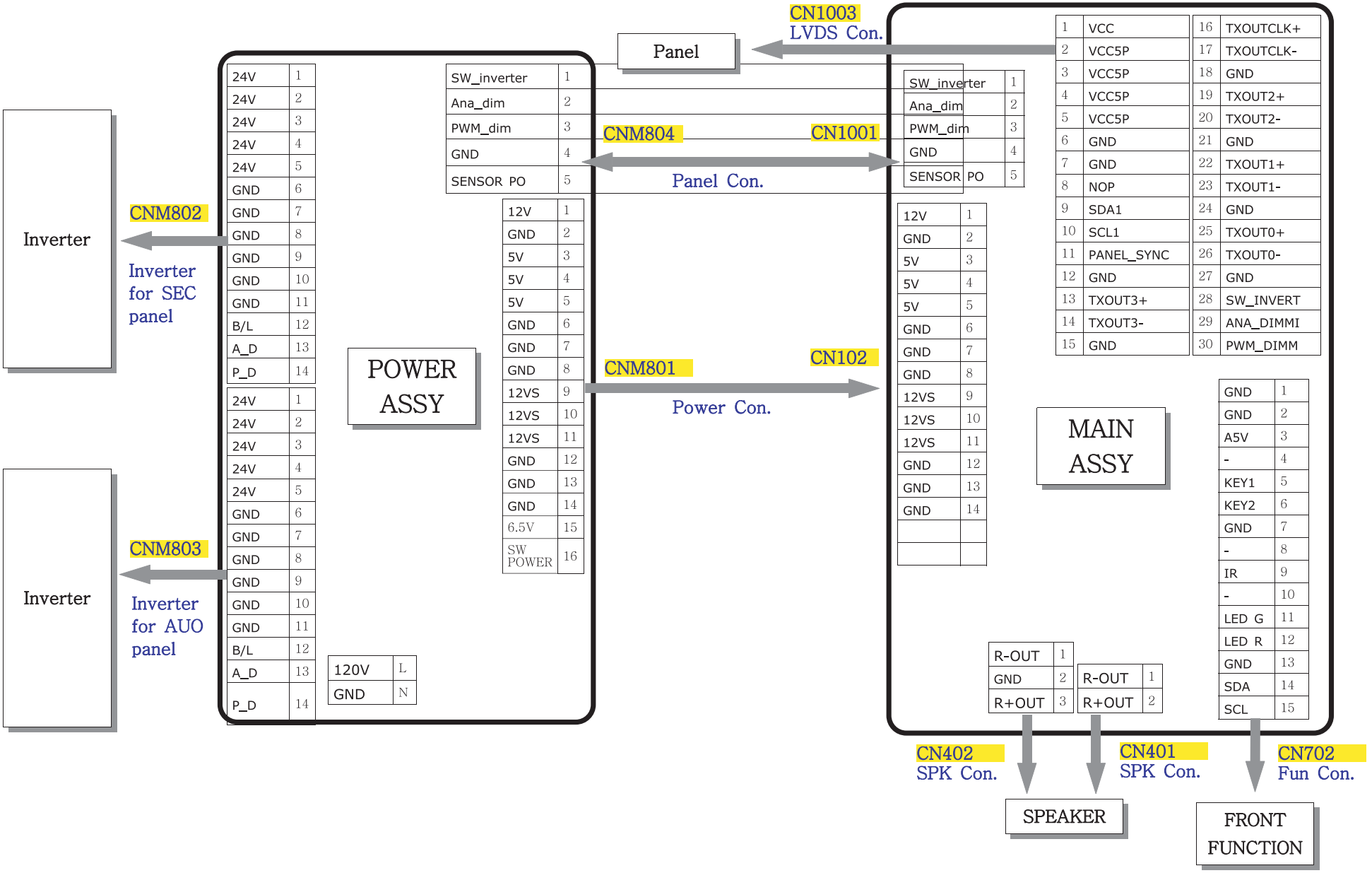

Memo

9 Schematic Diagrams

- This Document can not be used without Samsung s authorization.

9-1 Power Schematic Diagram

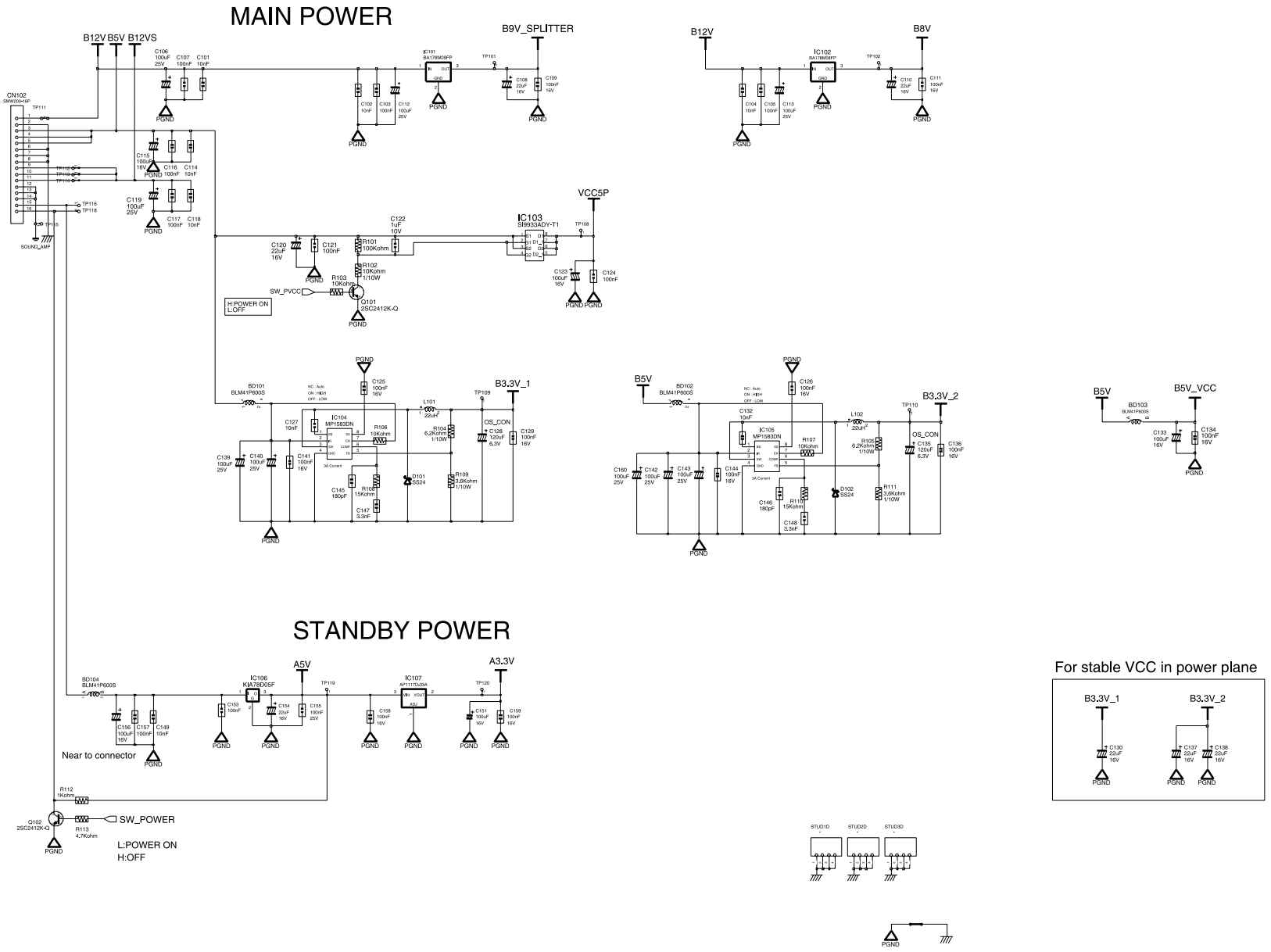

- This Document can not be used without Samsung s authorization.

9-2 Stand by Micom Schematic Diagram

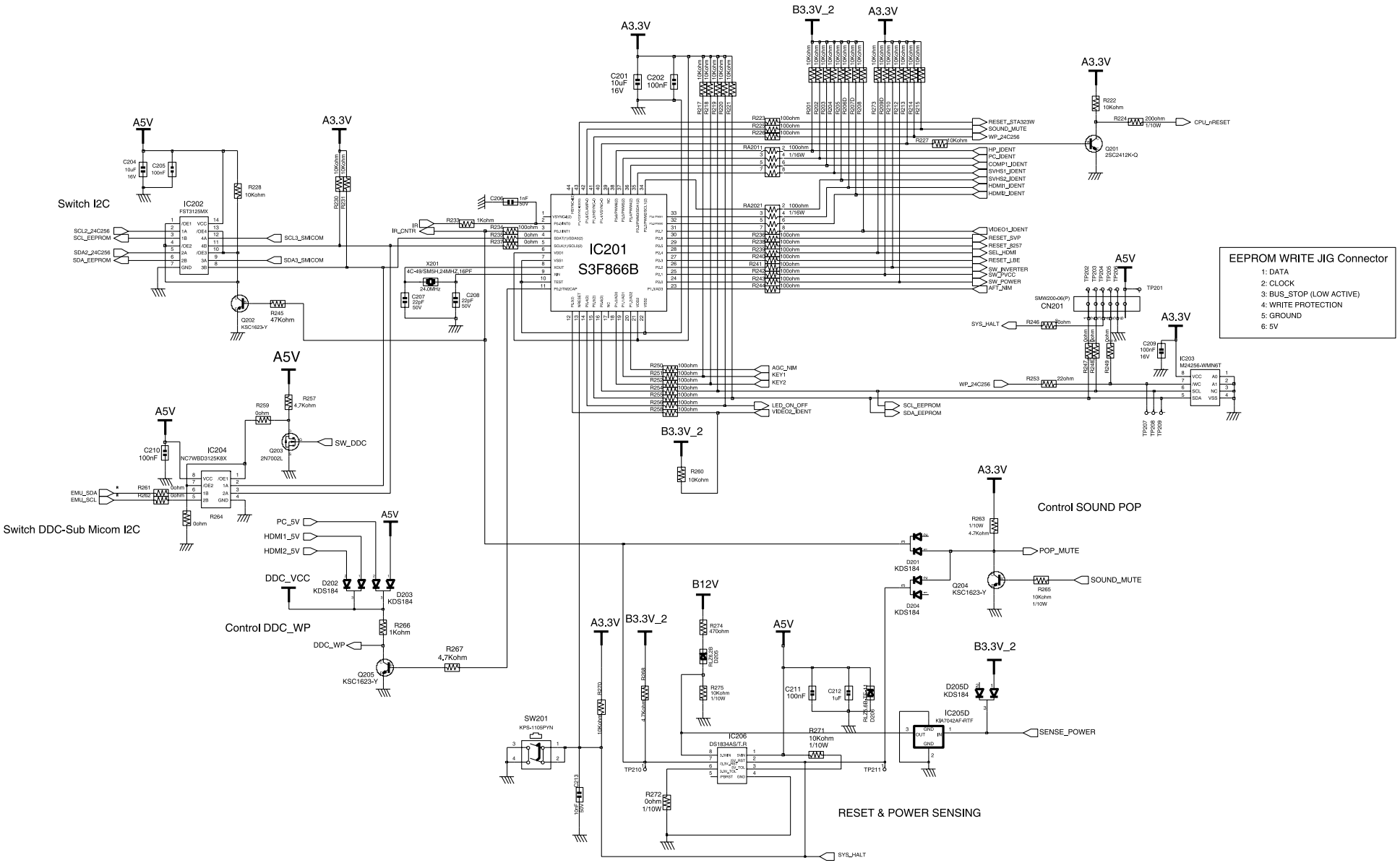

- This Document can not be used without Samsung s authorization.

9-3 STV8257 Diagram

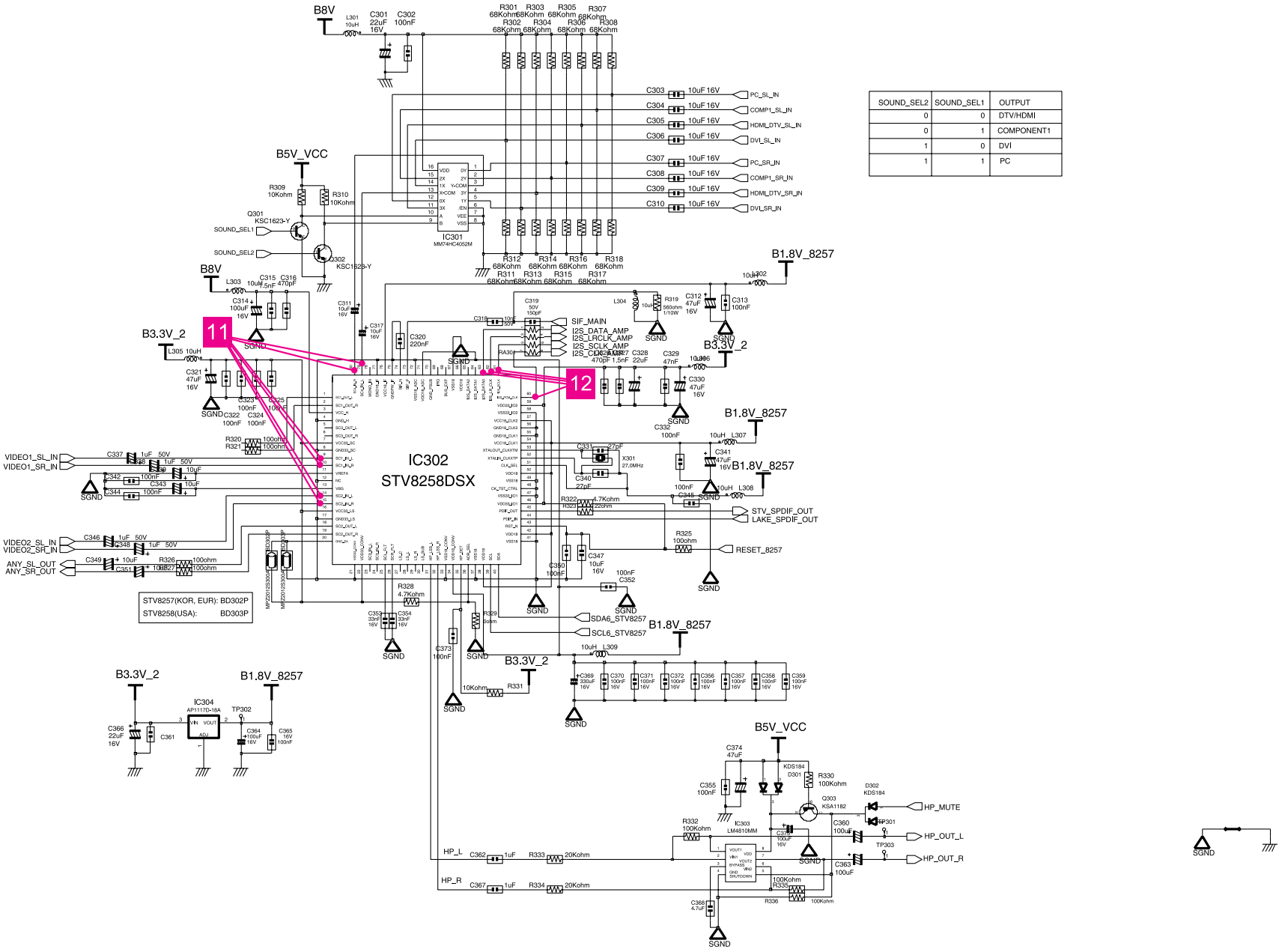

SOUND_SEL2	SOUND_SEL1	OUTPUT
0	0	DTV/HDMI
0	1	COMPONENT1
1	0	DVI
1	1	PC

- This Document can not be used without Samsung s authorization.

9-4 STA323W Schematic Diagram

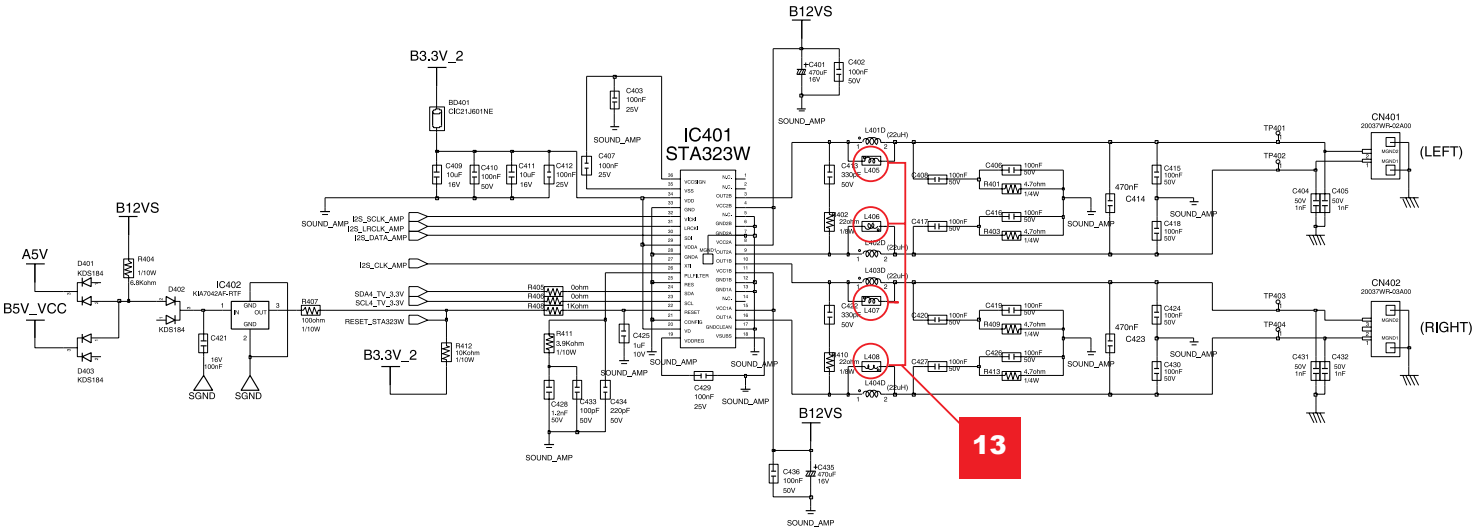

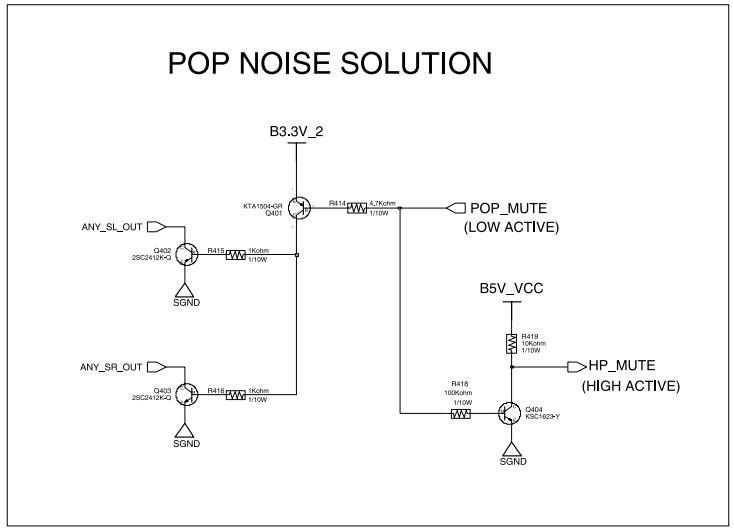

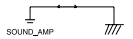

- This Document can not be used without Samsung s authorization.

9-5 TUNER_SPLITTER Schmetic Diagram

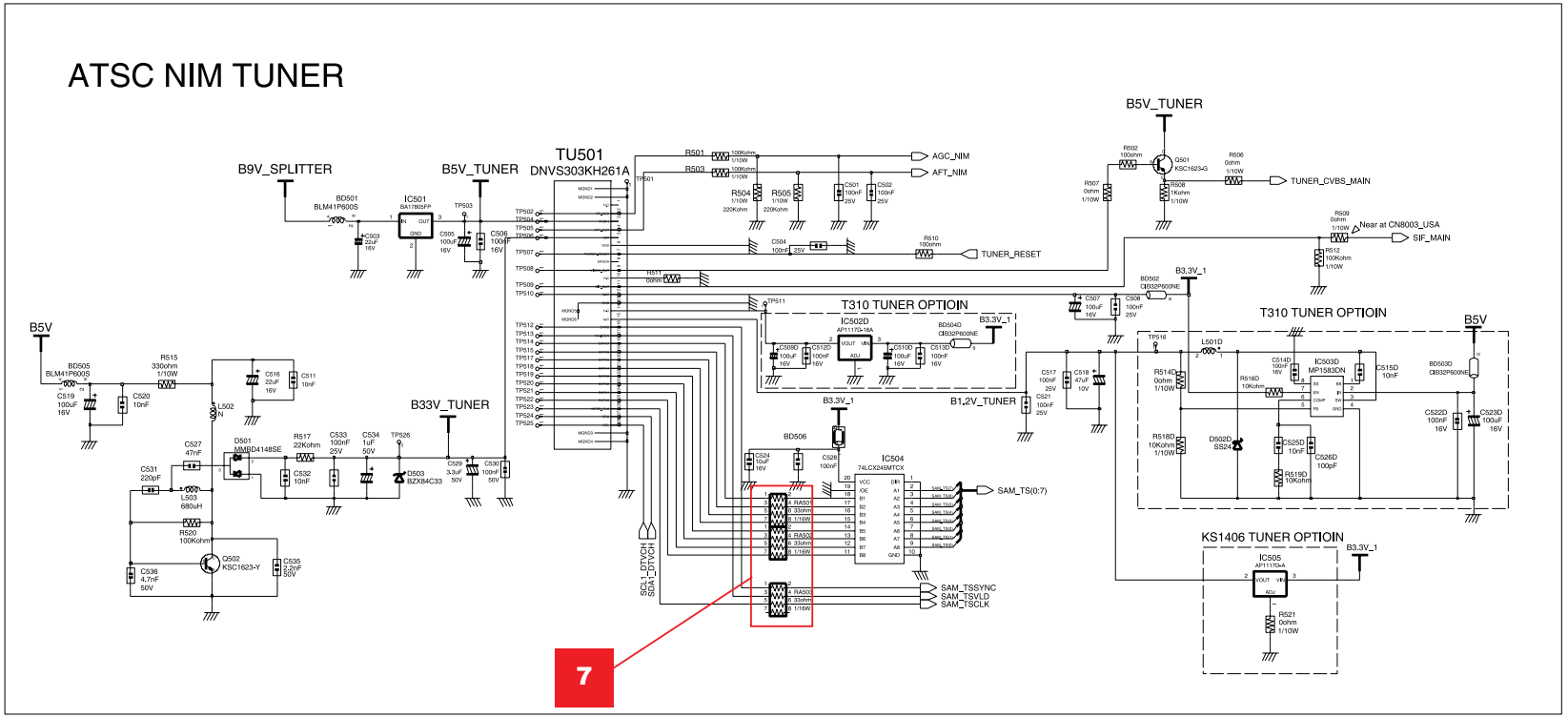

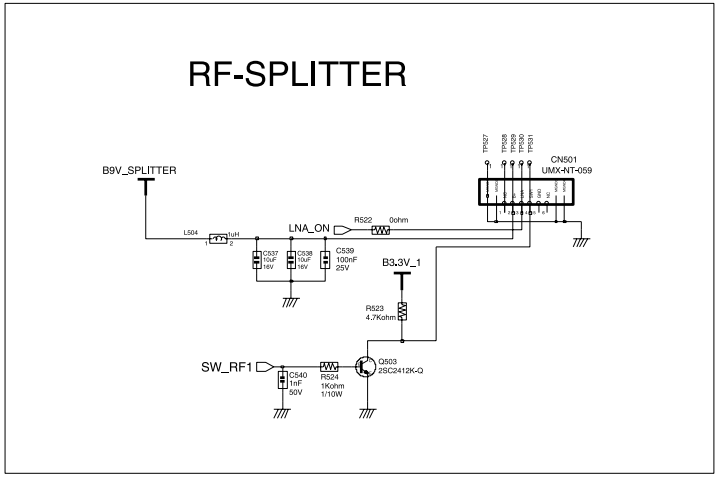

- This Document can not be used without Samsung s authorization.

9-6 AV_IN_OUT_1 Schmetic Diagram

AV INPUT 1

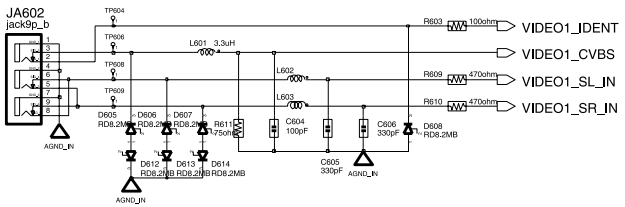

SVHS INPUT 1

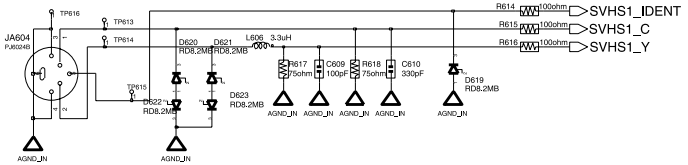

ANYNET_SOUND_OUT

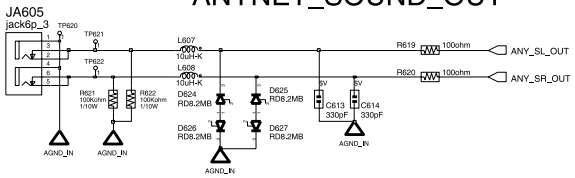

COMPONENT 1

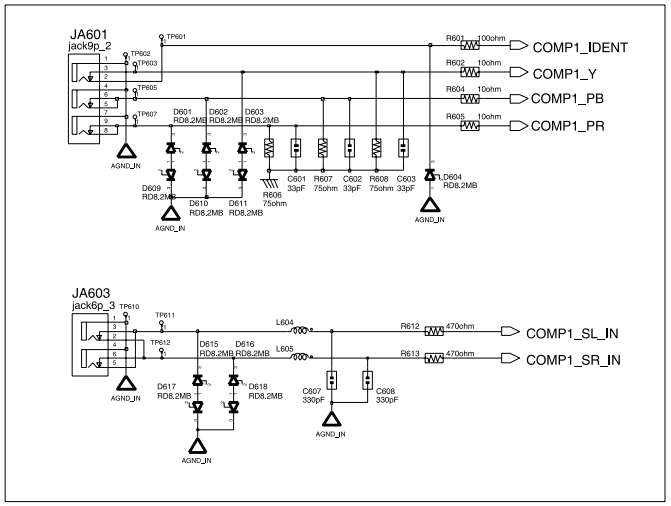

OPTICAL SPDIF OUT

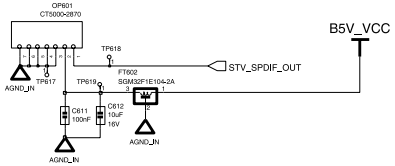

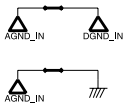

- This Document can not be used without Samsung s authorization.

9-7 AV_IN_OUT_2 Schmetic Diagram

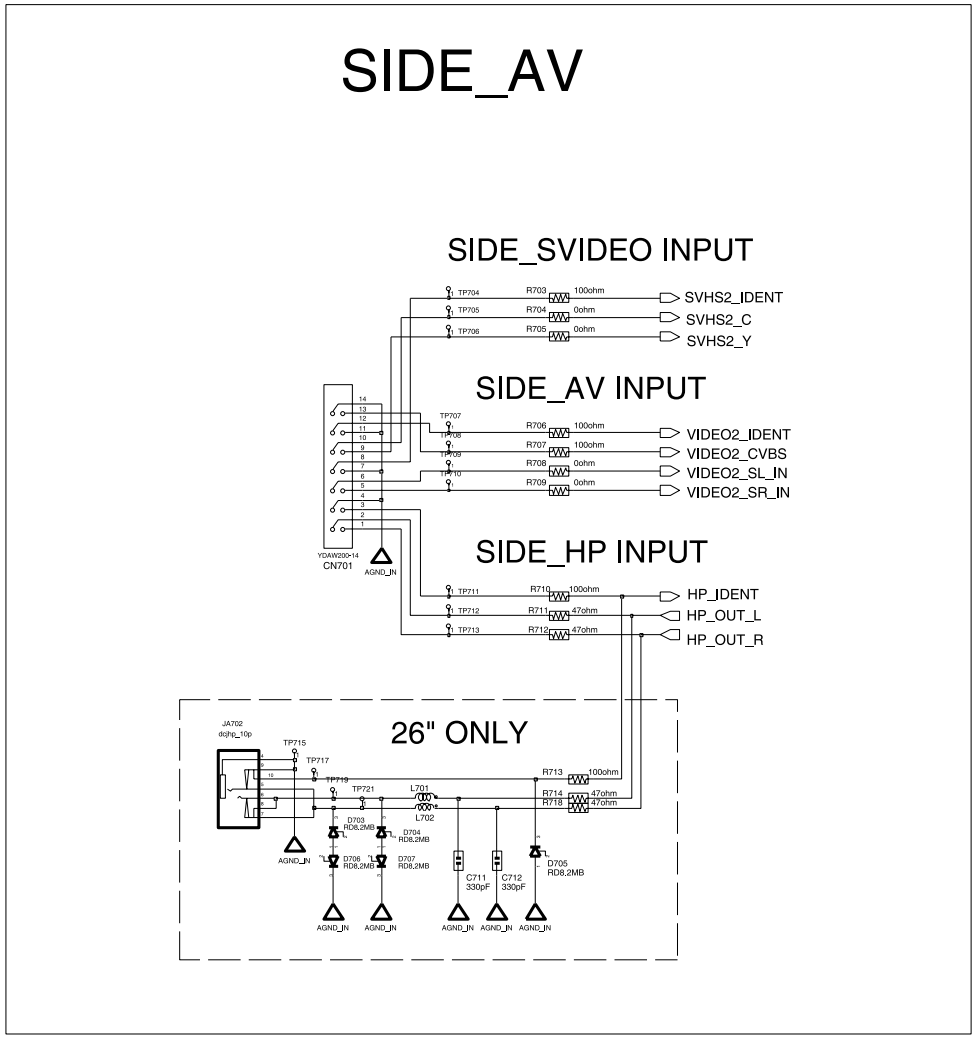

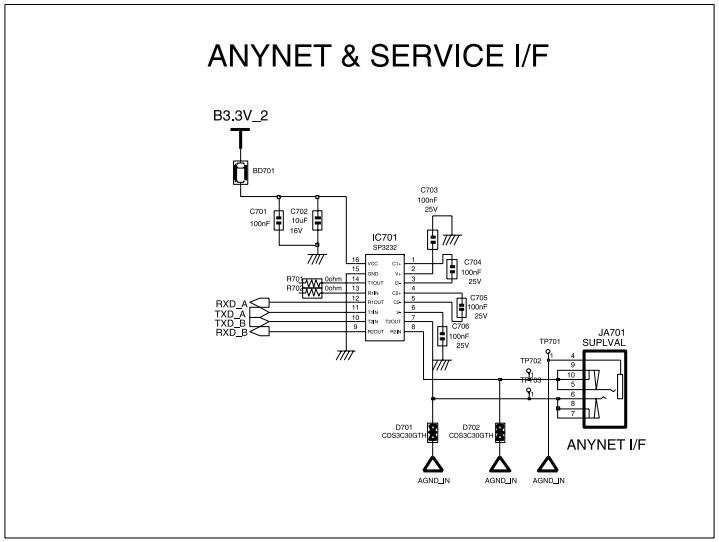

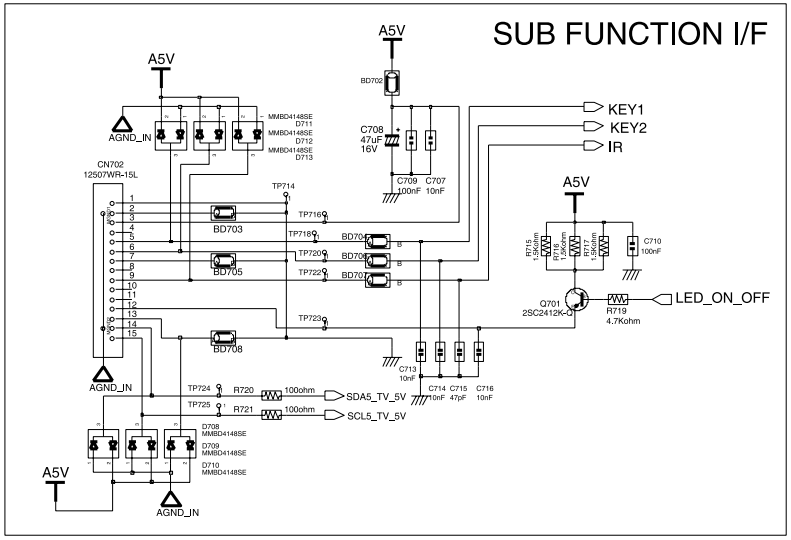

- This Document can not be used without Samsung s authorization.

9-8 PC_HDMI_INPUT Schmetic Diagram

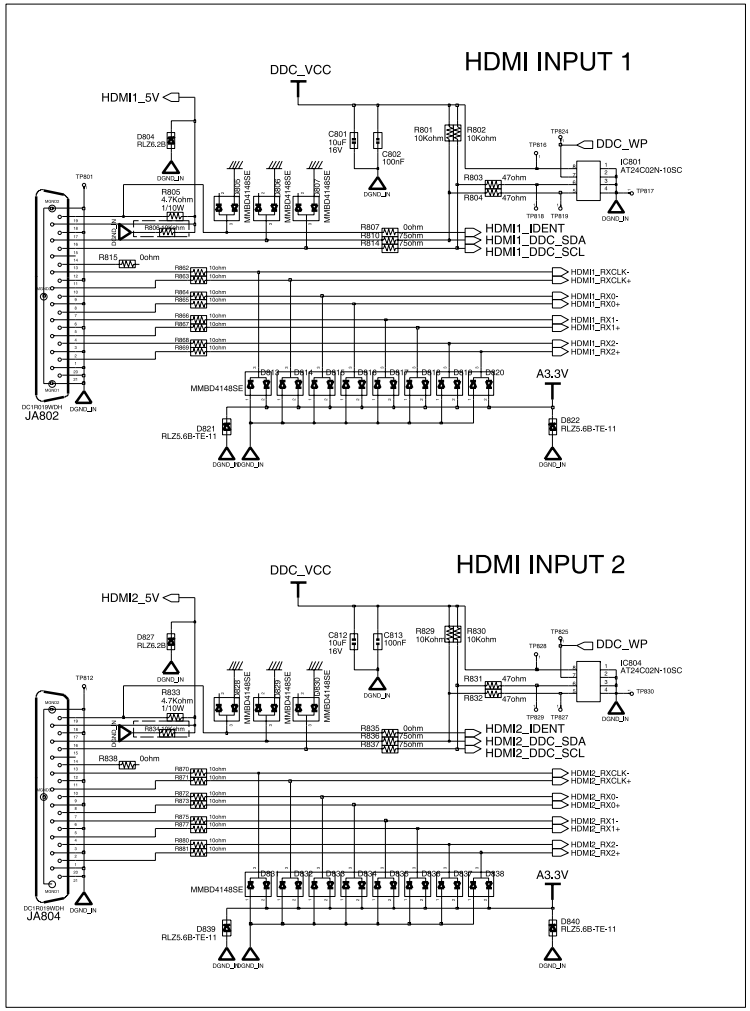

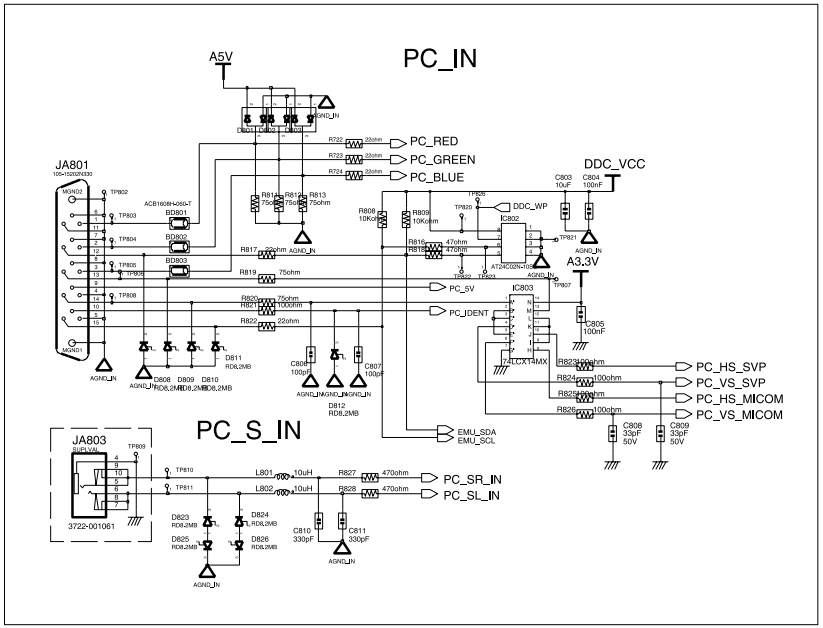

4

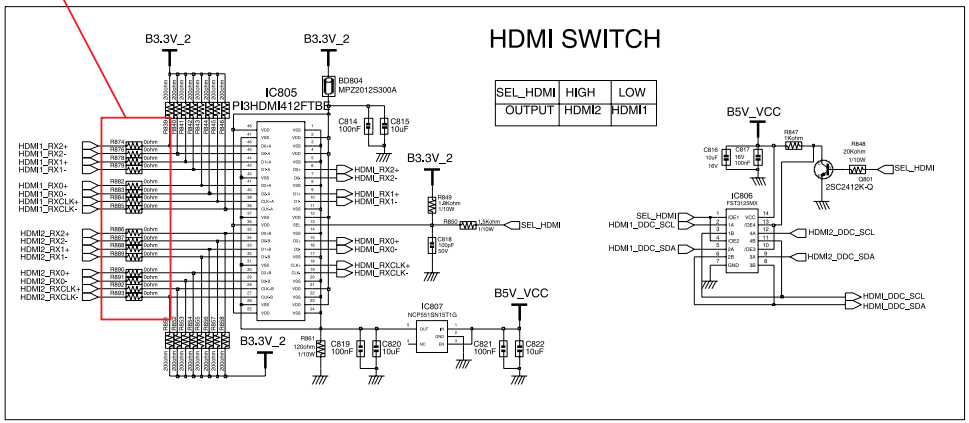

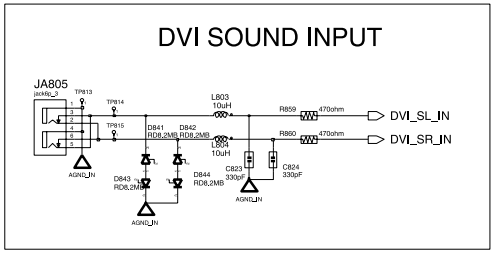

- This Document can not be used without Samsung s authorization.

9-9 SVP_PX Schmetic Diagram

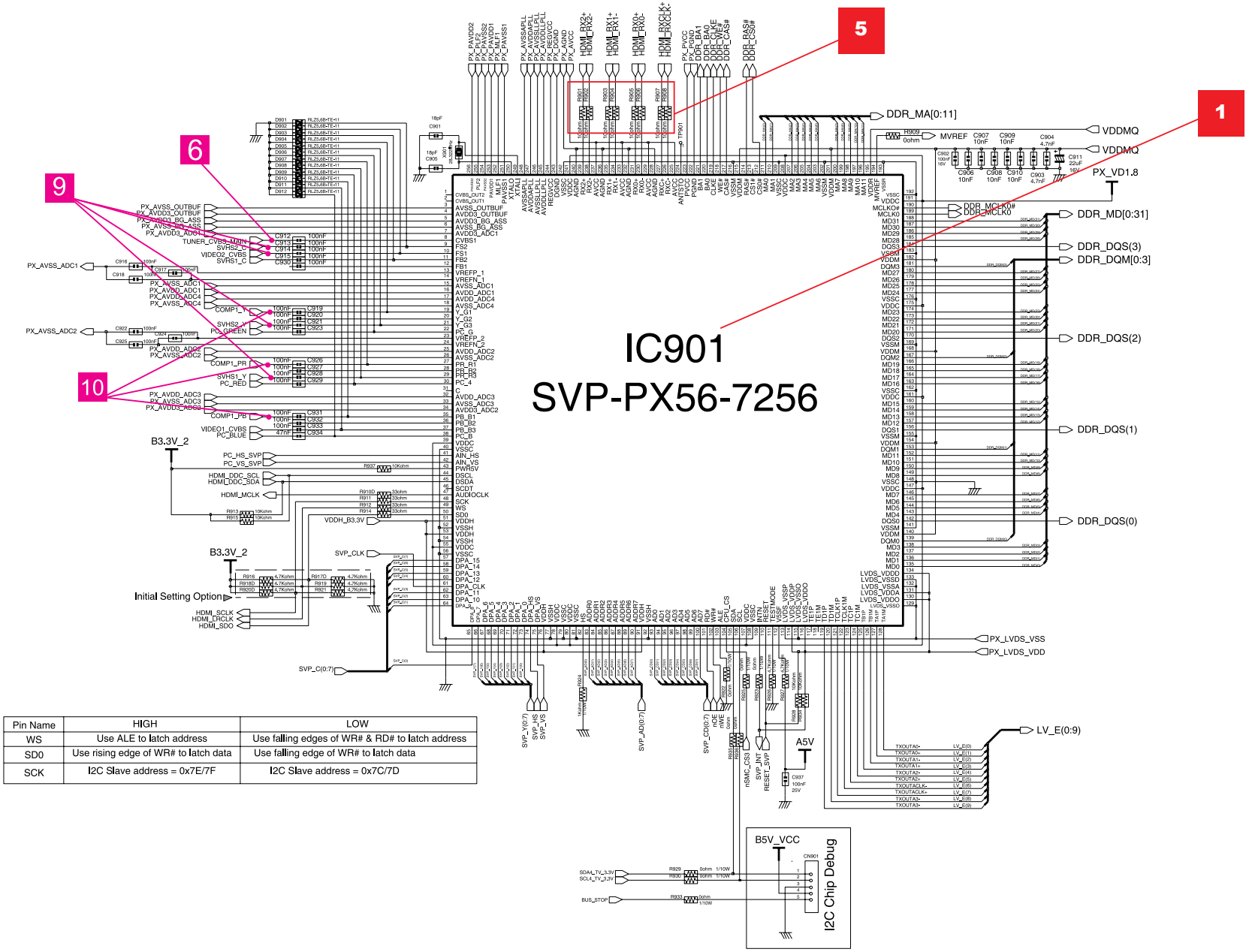

Pin Name	HIGH	LOW
WS	Use ALE to latch address	Use falling edges of WR# & RD# to latch address
SD0	Use rising edge of WR# to latch data	Use falling edge of WR# to latch data
SCK	I2C Slave address = 0x7E/7F	I2C Slave address = 0x7C/7D

- This Document can not be used without Samsung s authorization.

9-10 LBE Schmetic Diagram

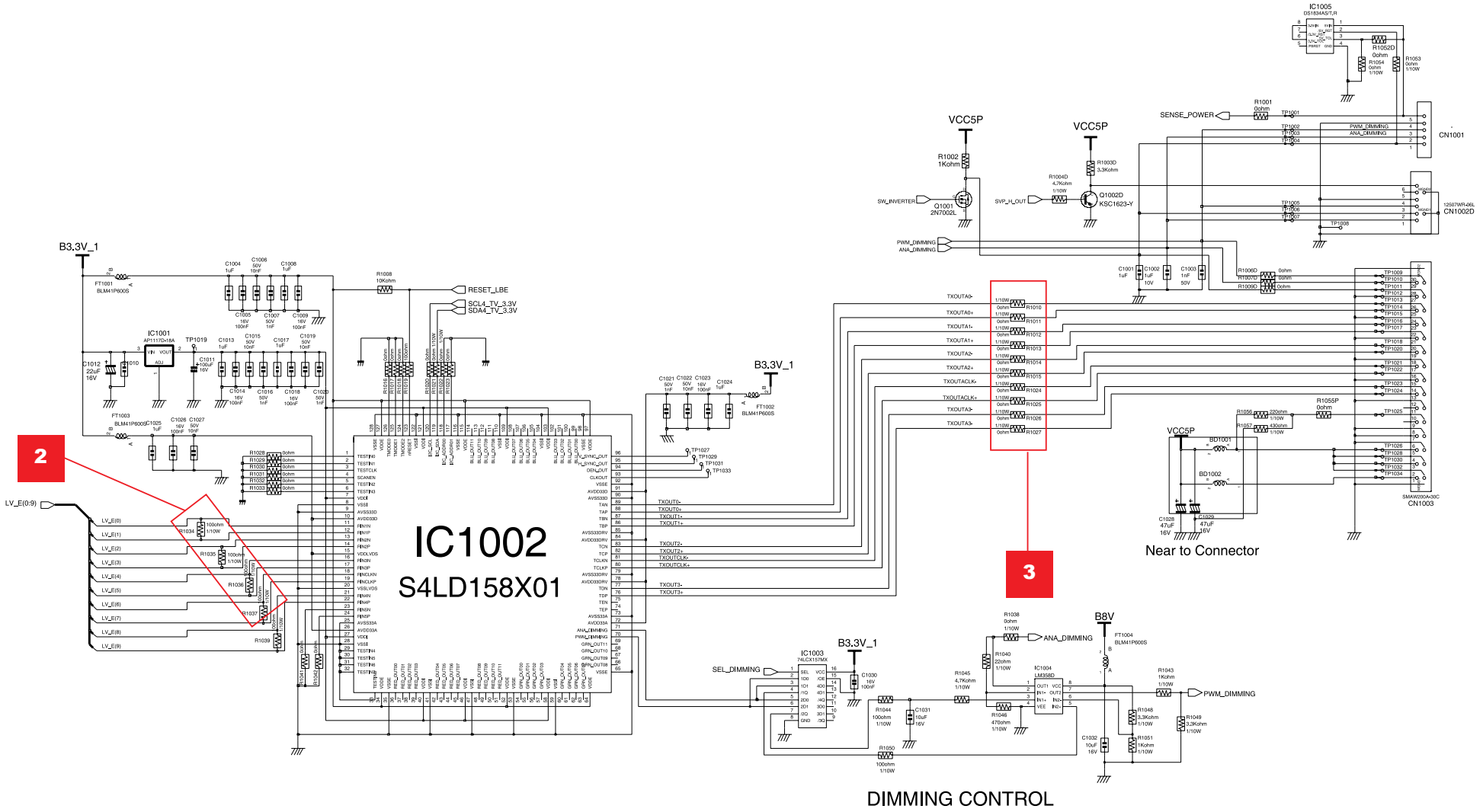

- This Document can not be used without Samsung s authorization.

9-11 SVP_PX_POWER Schmetic Diagram

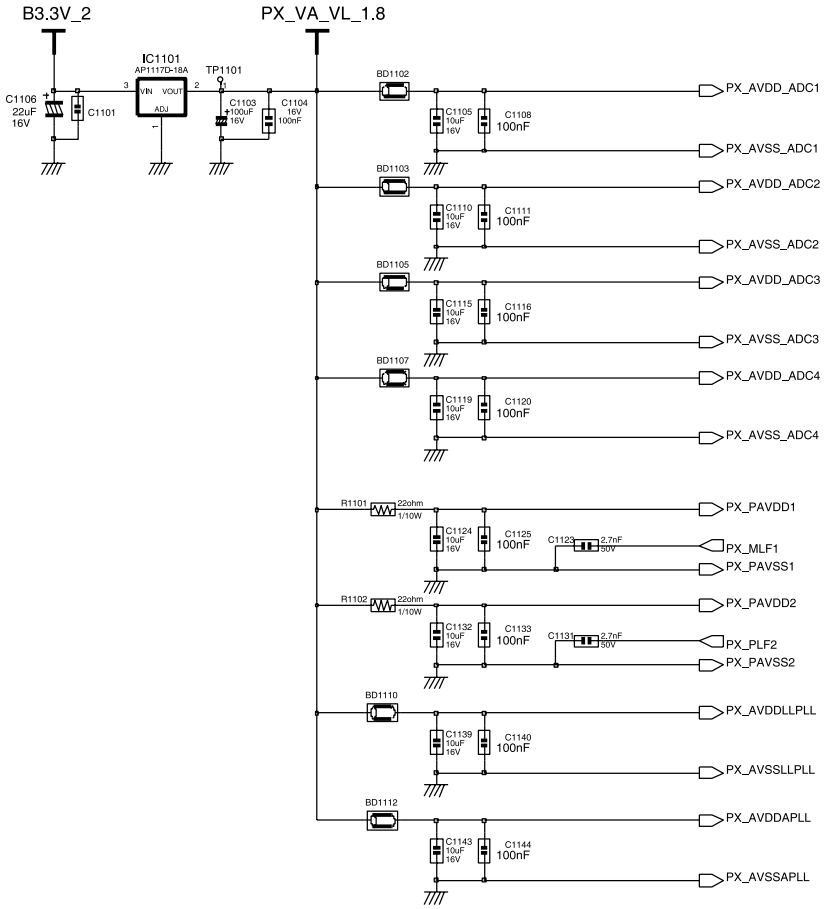

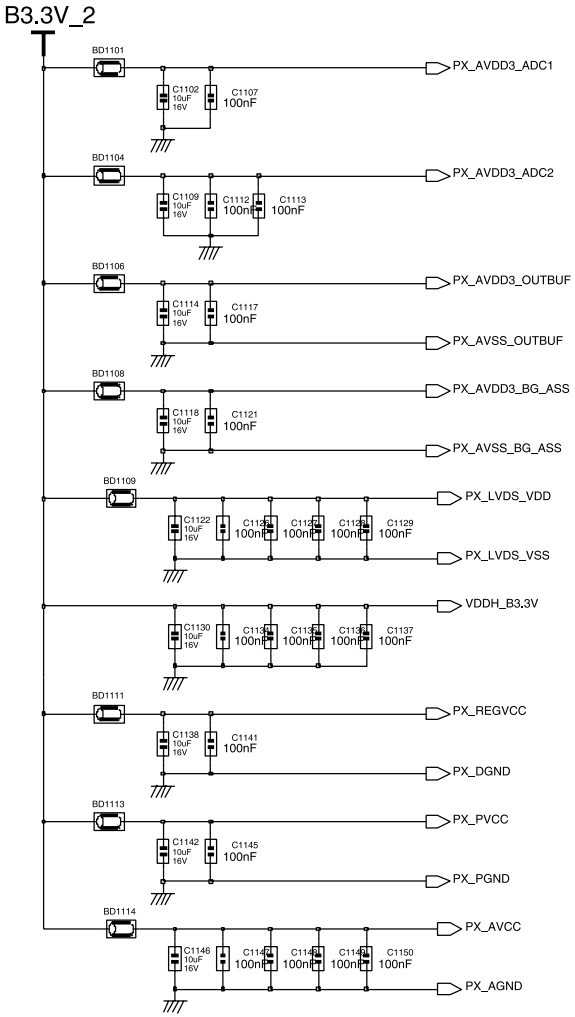

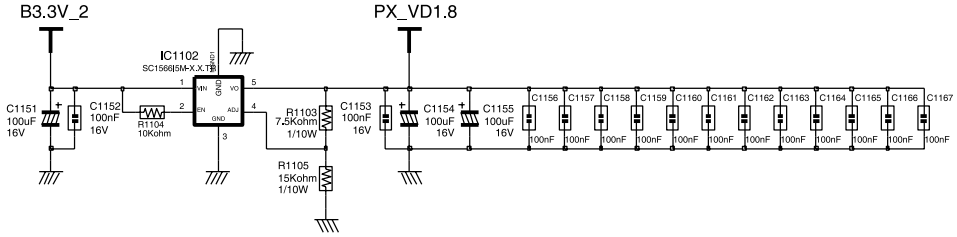

- This Document can not be used without Samsung s authorization.

9-12 SVP_PX_DDR Schmetic Diagram

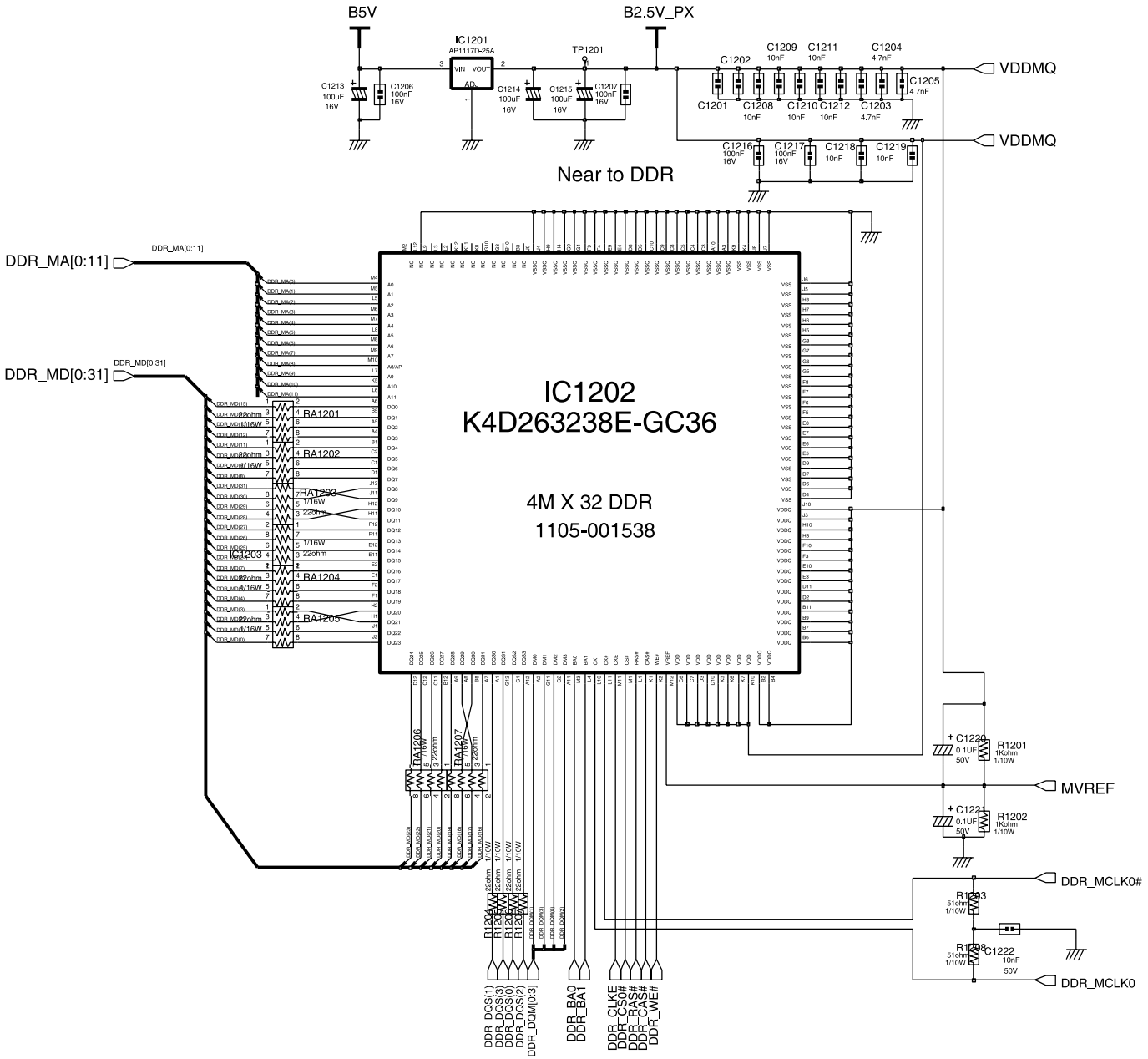

- This Document can not be used without Samsung s authorization.

9-13 LAKE_I2C_GPIO_USB_UART_ETC Schmetic Diagram

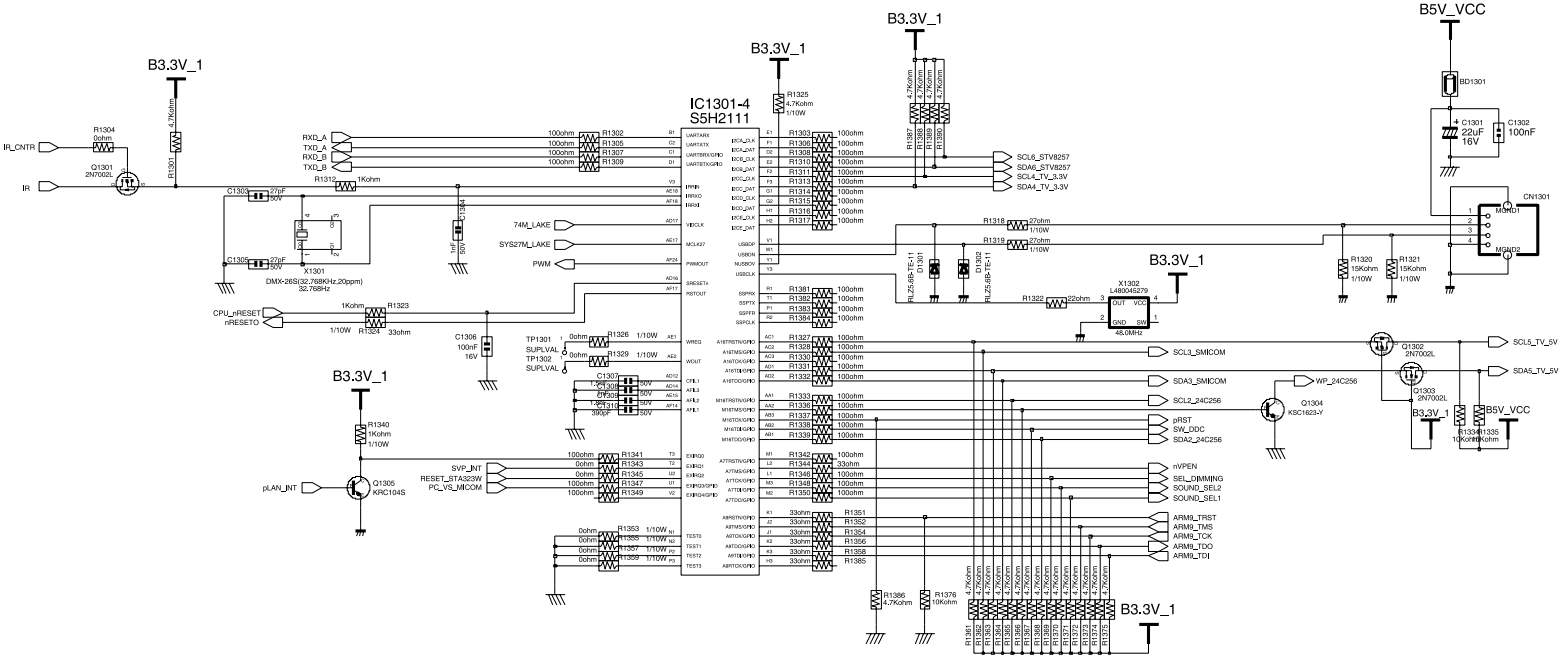

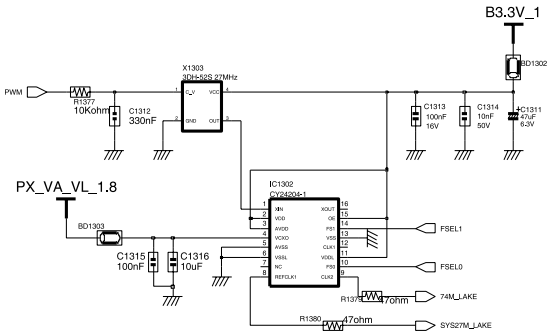

FSEL0	FSEL1	CLK1/CLK2
L	L	27Mhz
H	L	27.027Mhz
L	H	74.250Mhz
H	H	74.175Mhz

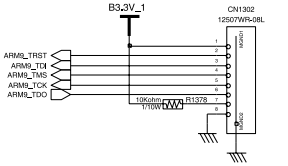

- This Document can not be used without Samsung s authorization.

9-14 LAKE_I2SINOUT_YCbCr_OUT Schmetic Diagram

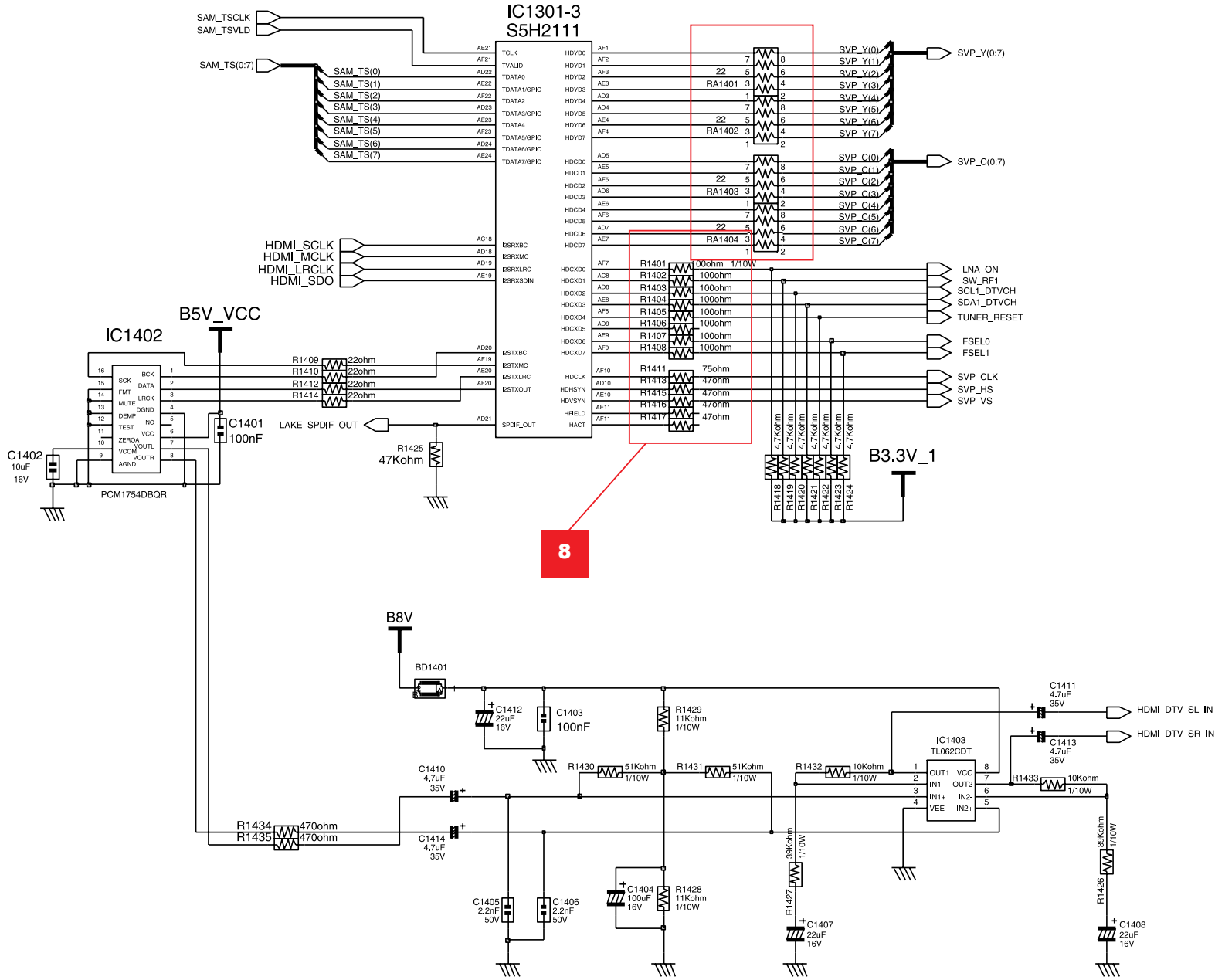

- This Document can not be used without Samsung s authorization.

9-15 LAKE_DDR Schmetic Diagram

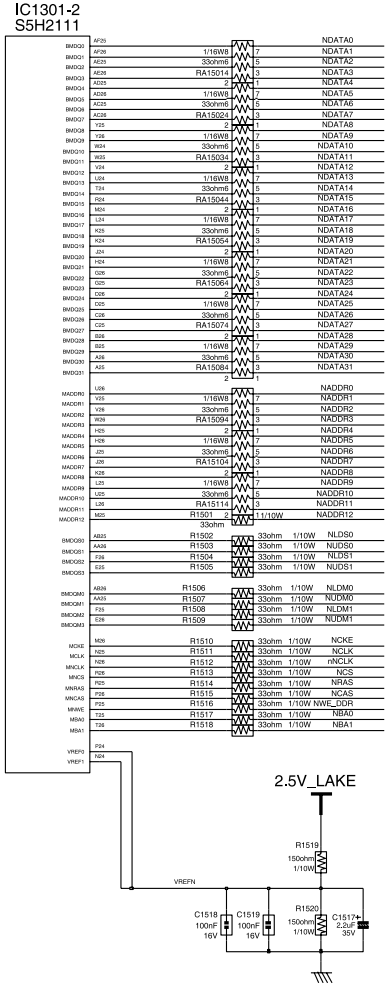

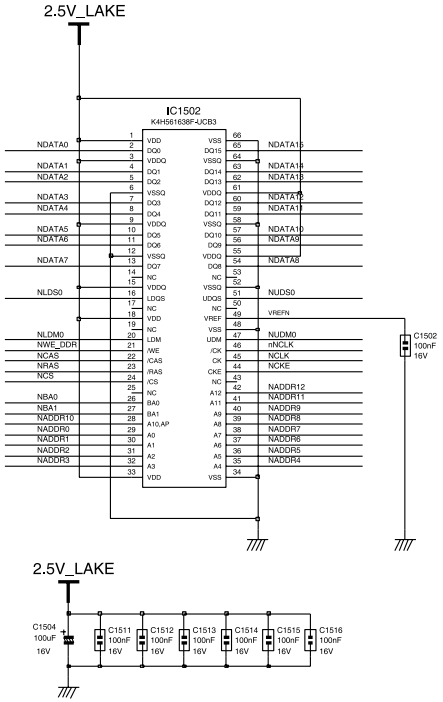

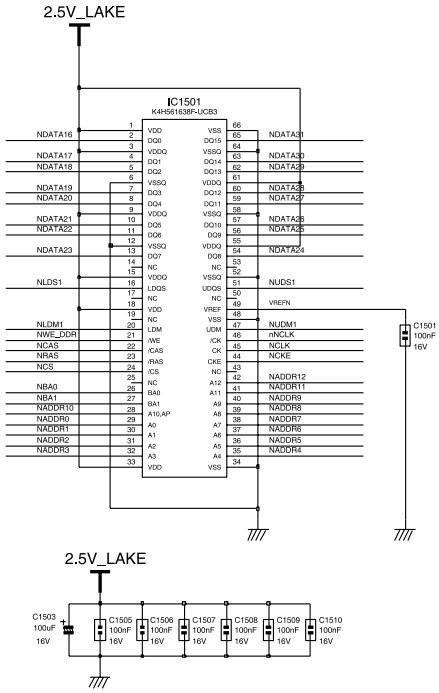

- This Document can not be used without Samsung s authorization.

9-16 LAKE_FLASH_DEBUG Schmetic Diagram

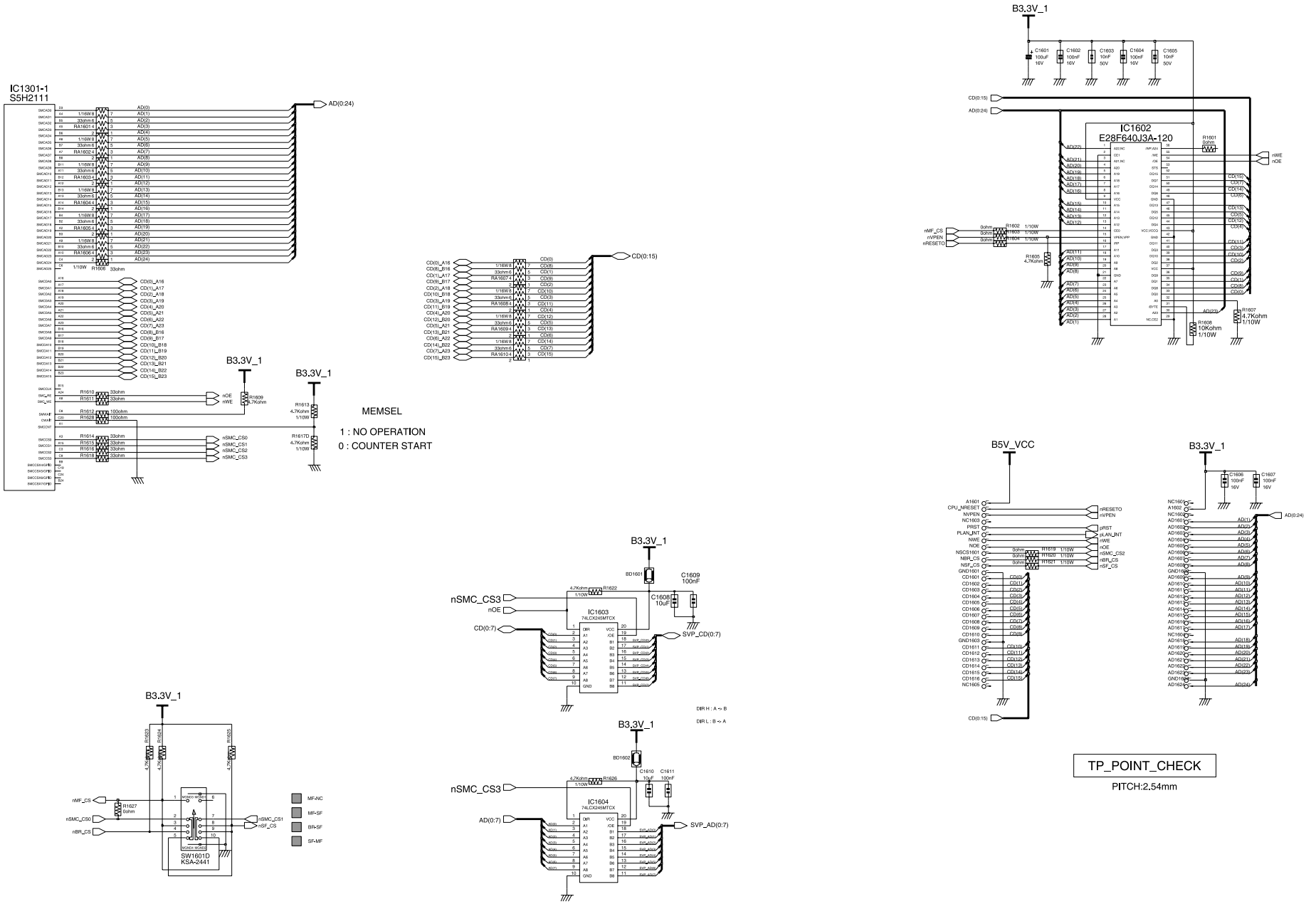

- This Document can not be used without Samsung s authorization.

9-17 LAKE_POWER Schmetic Diagram

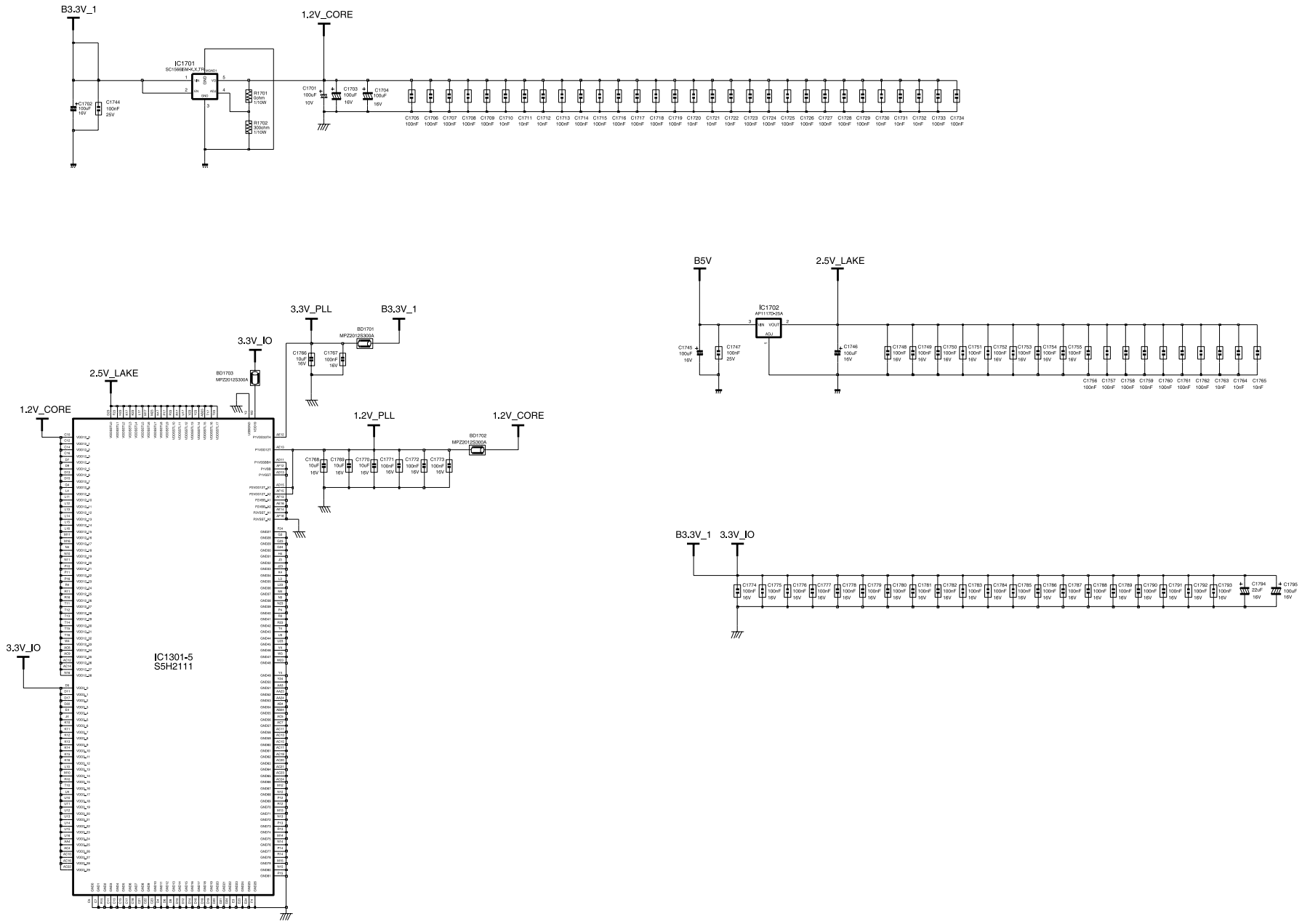

Memo