9V to 27V Input WLED Current Balance Controller with Boost Driver

Specification Rev. 2.2

FEATURES

- Wide Input Range: 9V to 27V
- Adjustable Switching Frequency Setting
- Current Mode Control
- SLP (Short LED Lamp Protection)
- OLP (Open LED Lamp Protection)
- OCP (Over Current Protection)
- OVP (Output Over Voltage Protection)
- VCC OVP (Input Over Voltage Protection)
- OTP (Over Temperature Protection)
- PWM Dimming Input

APPLICATIONS

- LED Backlight

GENERAL DESCRIPTION

The PF7001 S is a wide input voltage range WLED controller with boost driver which can be operated from 9V to 27V. By driving BJT, the low total BOM cost WLED driver can be achieved. PF7001 S integrated the current mode PWM controller with a high driving capability MOSFET driver, over current protection, over temperature protection, over output voltage protection, and input over voltage protection in a SOP-14 package to minimize the PCB size as well as the component counts. The adjustable frequency setting helps users to select the optimized operation frequency.

CONFIDENTIAL
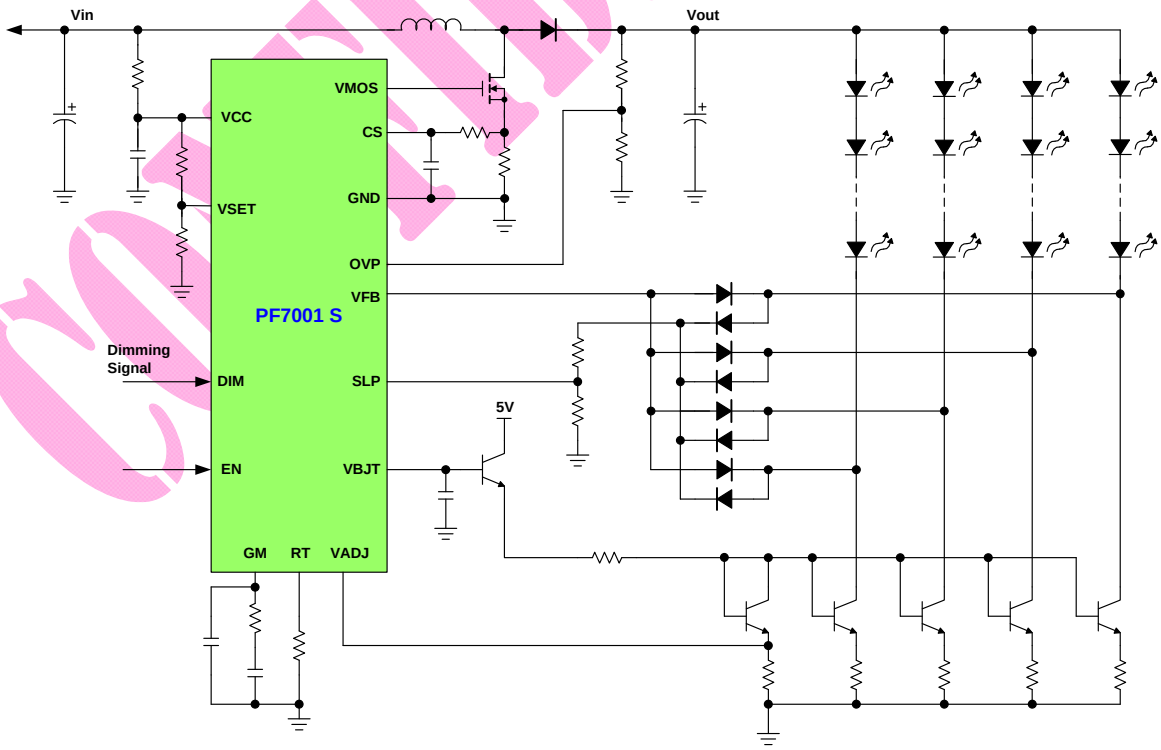
TYPICAL APPLICATION