SERVICE MANUAL

MODEL : 28LEM-3002/T2C;32LEM-3002/T2C

(SOLUTION MSD308C)

CONTENTS

SAFETY PRECAUTION

SPECIFICATION

BLOCK DIAGRAM

CIRCUIT DIAGRAM

FACTORY MODE&ADJUSTMENT

UPGRADE SOFTWAR

TROUBLE SHOOTING

APPENDIX

This manual is the latest at the time of printing, and does not include the modification which may be made after the printing, by the constant improvement of product.

IMPORTANT SAFETY INSTRUCTIONS

This symbol indicates " dangerous voltage " inside the product that presents a risk of electric shock or personal injury.

This symbol indicates important instructions accompanying the product.

Please read this manual carefully before using this product.

- Before connecting the AC power cord ,make sure the voltage designation of the LCD TV corresponds to the local electrical supply .
  If you are unsure of your power supply , ask your local power company .

- Never insert anything metallic into the cabinet openings of the liquid crystal display LCD TV/monitor;otherwise it may create the danger of electric shock.

- To avoid electric shock, Never touch the inside of the LCD TV/monitor .
  Only a qualified technician should open the case of the LCD TV/monitor.

- Never use your LCD TV/monitor if the power cord has been damaged .
  Do not allow anything to rest on the power cord, and keep the cord away from place where people can trip over it .

- Be sure to hold the plug, not the cord, when disconnecting the power cord from an electric socket.

- Openings in the LCD TV/monitor cabinet are provided for ventilation.
  To prevent overheating, these openings should not be blocked or covered. Also, avoid using the LCD TV/monitor on a bed ,sofa ,rug, or other soft surface. Doing so may block the ventilation openings in the bottom of the cabinet. If you put the LCD TV/monitor in a bookcase or some other enclosed space, be sure to provide adequate ventilation.

- Do not expose the LCD TV/monitor to extreme temperature conditions or to extreme humidity conditions.

- The apparatus shall not be exposed to dripping or splashing and that no objects filled with liquids.

PRODUCT SPECIFICATION

Model	28LEM-3002/T2C;32LEM-3002/T2C	
Solution	MSD308C	
ATV System	PAL BG/DK/ I SECAM BG/DK/L	
	48.25~863.25 MHz	
	Picture I.F.	38.90MHz （BG,DK,I）
	Sound I.F.	32.40MHz(DK,L)
		32.90MHz(I)
	Tuning System	FS With PLL
	Tuner Band	Standard system with hyper band
	Auto Channel Scanning	Yes
	Number Of Preset Channels	100
DTV System	DVB-T	COFDM 2K/8K QPSK, 16QAM, 64QAM
	DVB-T2	COFDM 8K/32K QPSK, 16QAM, 64QAM, 256QAM
	DVB-C	COFDM 8K/32K QPSK, 16QAM, 64QAM, 256QAM
	Receiving	VHF (174MHz – 230MHz) UHF (474MHz - 862MHz)
	Bandwidth	7MHz/8MHz
	Video System	MPEG-2, MPEG-4,H.264 video decoding
	Sound System	MPEG Audio,Dolby Digital
AV	Color system	PAL/NTSC/SECAM
	Video	1Vp-p@75ohm
	Audio	500mV rms
HDMI	Audio	500mVrms
	Format	Max. 1080P
Antenna Impedance	75 Ohm Unbalanced	
Power Supply	Power supply: AC 100V-240V, 50/60Hz	
Back Panel Viewing	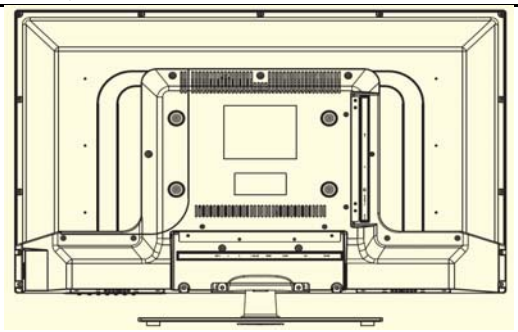	
	TV KEY	STANDBY,SOURCE, MENU, CH+/CH-, VOL +/-
	USB2.0 Socket	
Front Panel Viewing	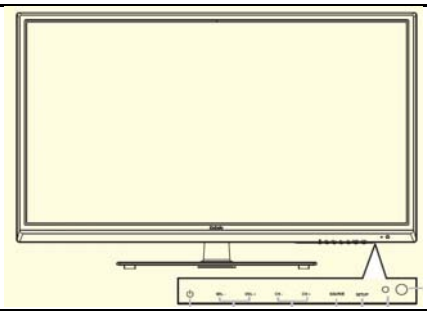	
	LED Indicators (Red/Green)	Standby/On
Terminals	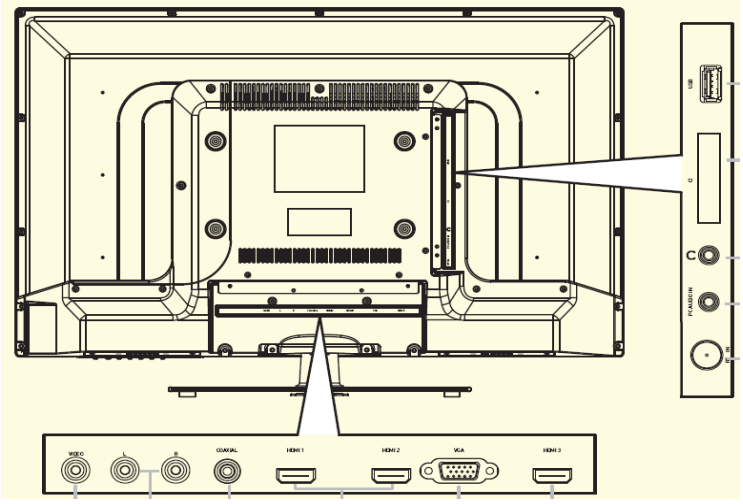	

Terminals	Audio In	RCA Audio (L/R) Jack - White/Red		X 1
		φ3.5 Stereo Jack		X 1
	VGA In	D-sub 15 Pin VGA Connector		X 1
	USB	USB2.0 Host		X 1
	COAX Output	RCA Jack (Black) optional		X 1
	Audio Output	φ3.5 Earphone Jack		X 1
Audio	Output Power (1 KHz 10% THD)			2.5W
	NICAM / STEREO			Yes
	Bass			Yes
	Treble			Yes
	Balance			Yes
OSD Language	Russian , English			
LCD Panel (Only For Reference, Parameters according to panel model)	LED2462 HD	Brand		CMO
		Model		M230HGE
		Size		23.6”
		Backlight		LED
		Pixel Pitch		0.265 mm x 0.265mm
		Resolution	Horizontal (dots)	1920
			Vertical (Lines)	1080
Support Resolution(For PC)	Horizontal (dots) (Max)			1920
	Vertical (Lines) (Max)			1080
Speaker	4 Ohm /5W			x2pcs
Power Consumption	On working			45W Max
	Standby			≦0.5W
Remote Control				
	Color	Black		
	Batteries	1.5V AAA X2		
	Customer Code	09F6		
	Remark	RC-LED100		

Note: Specifications are subject to change without notice

BLOCK DIAGRAM

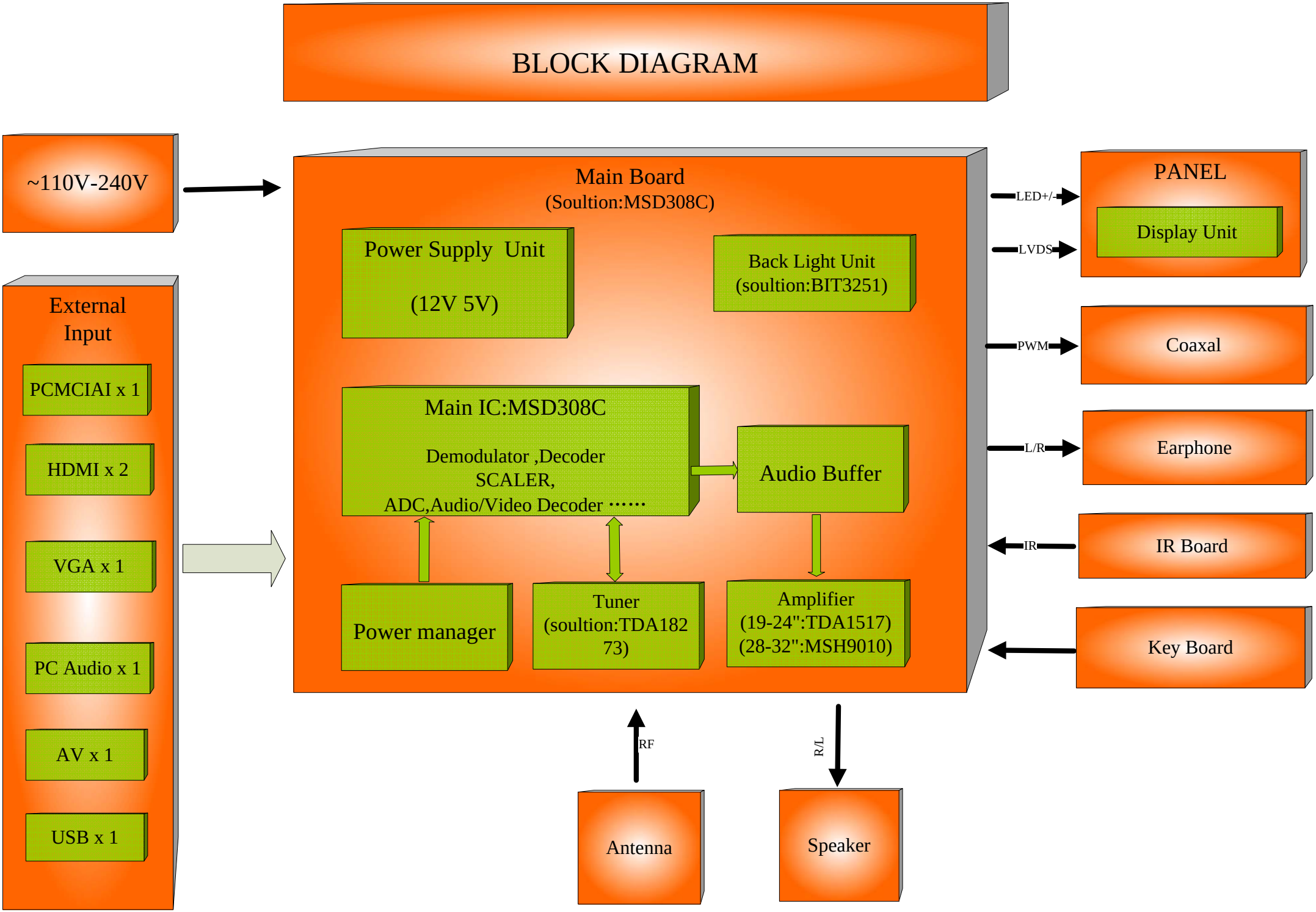

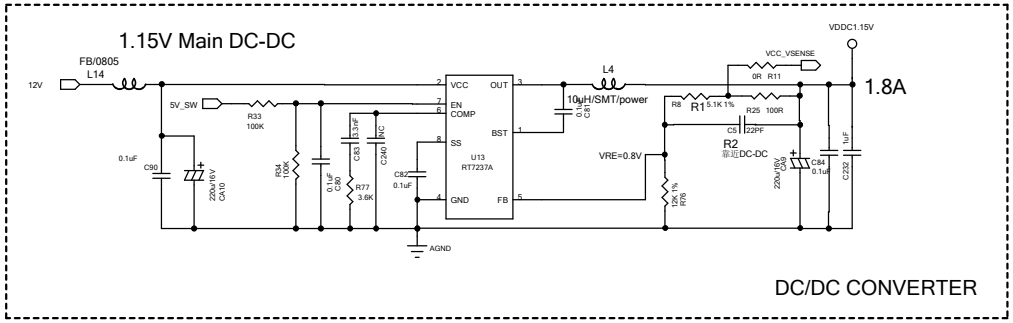

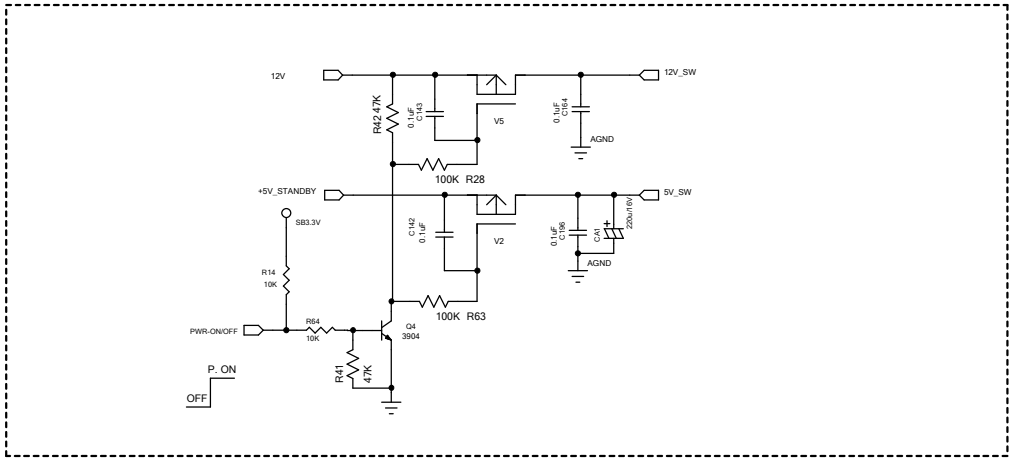

SCREW HOLE & SHIELD BOX

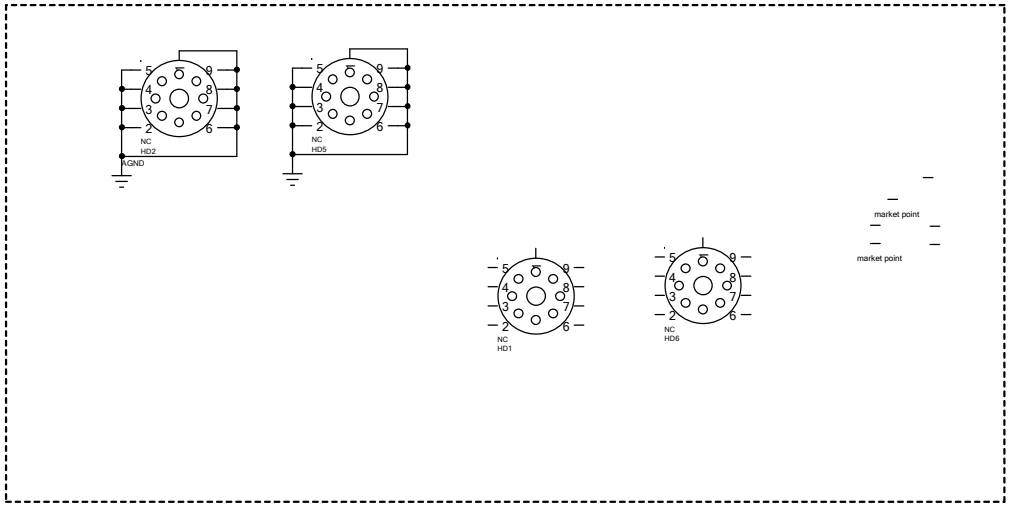

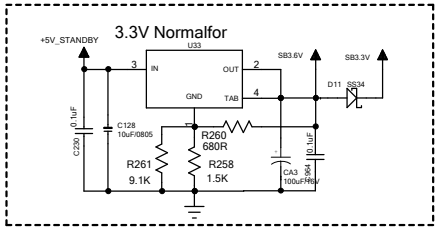

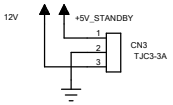

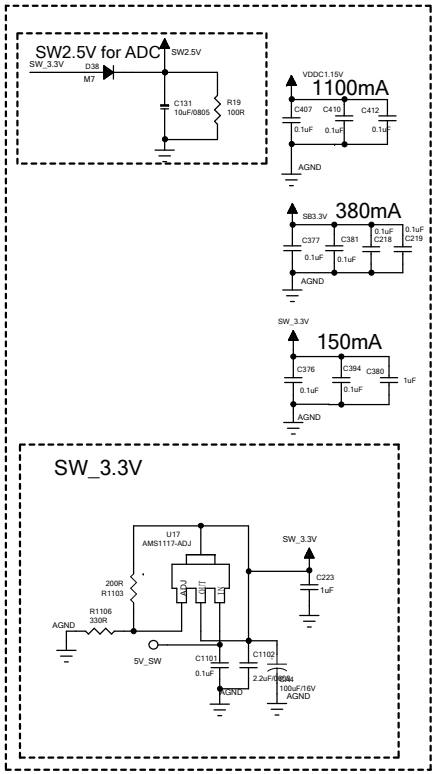

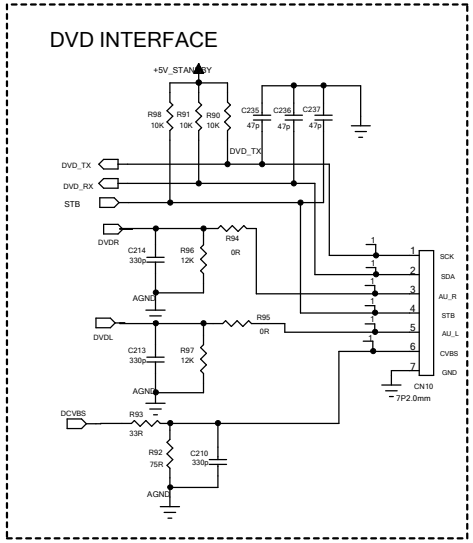

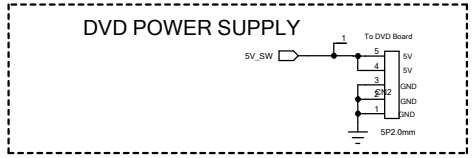

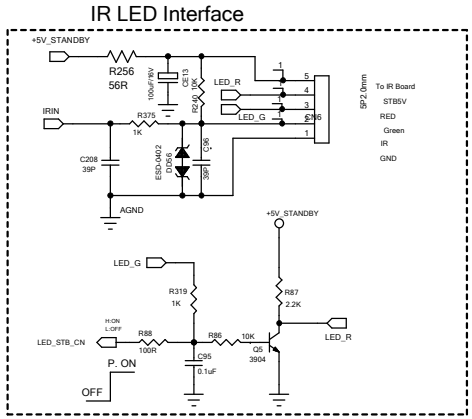

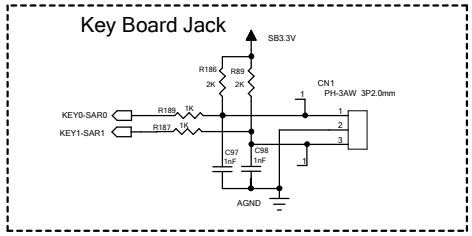

FORESEE TECHNOLOGY	
Title	POWER SUPPLY
Size A	Document Number
Rev	1.0
Date: 2009/11/25	Sheet 1 of 6

RGB & CVBS & USB

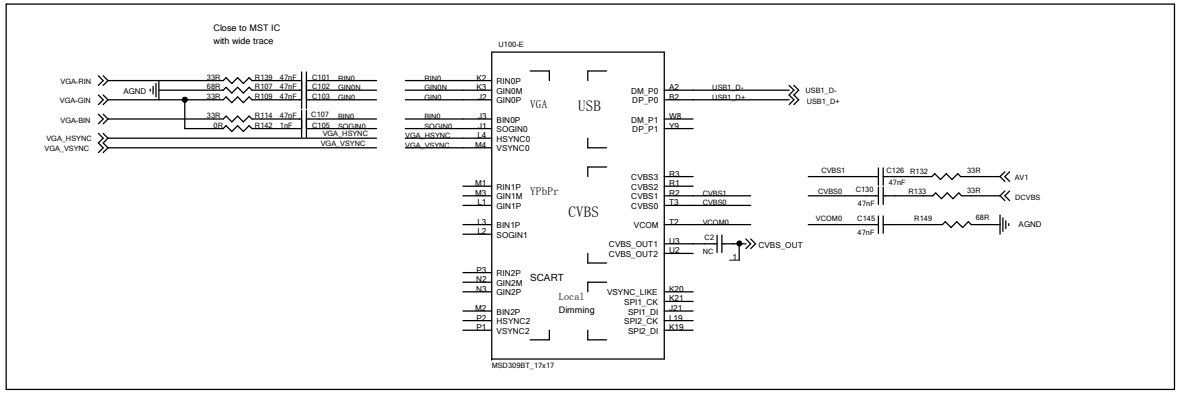

HDMI & Audio

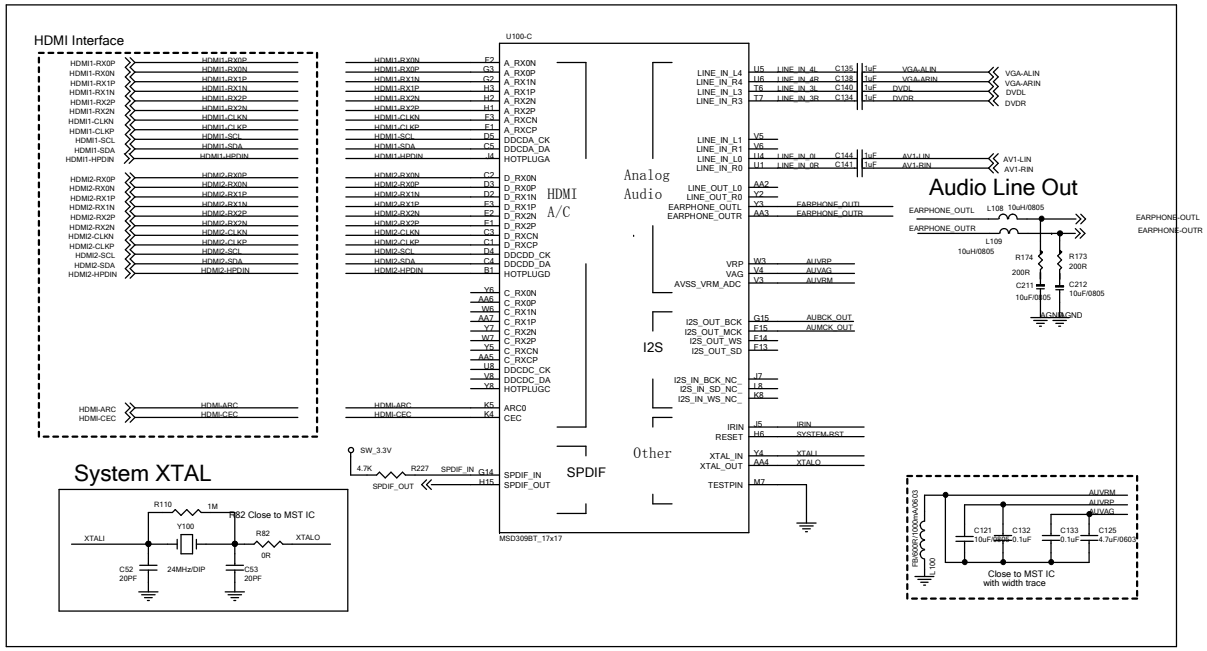

Mode Selection

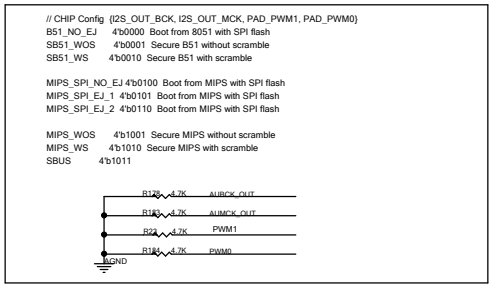

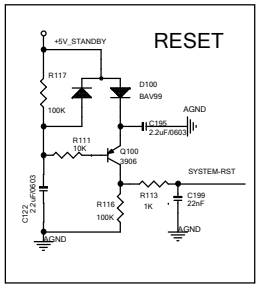

CI & TS & Front End

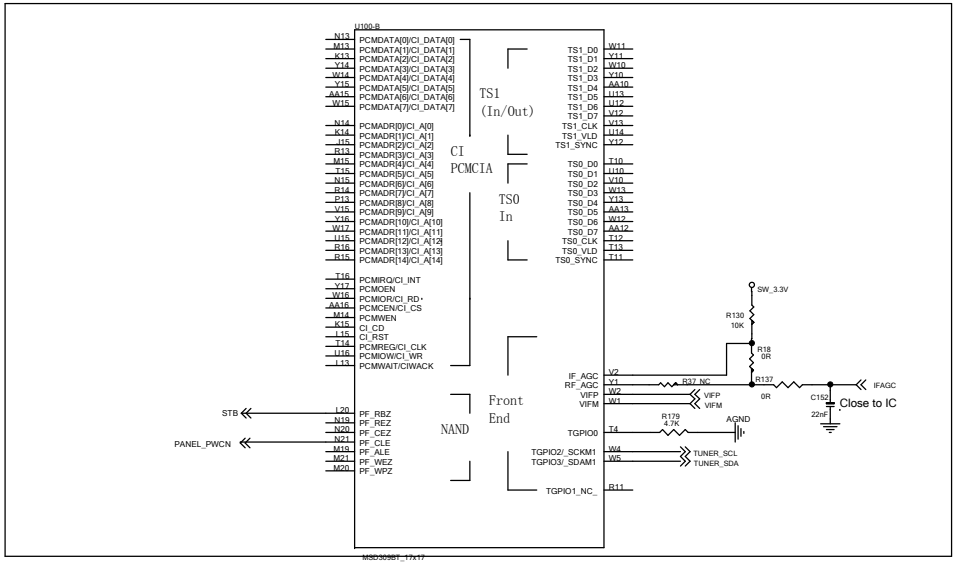

GPIO & LVDS

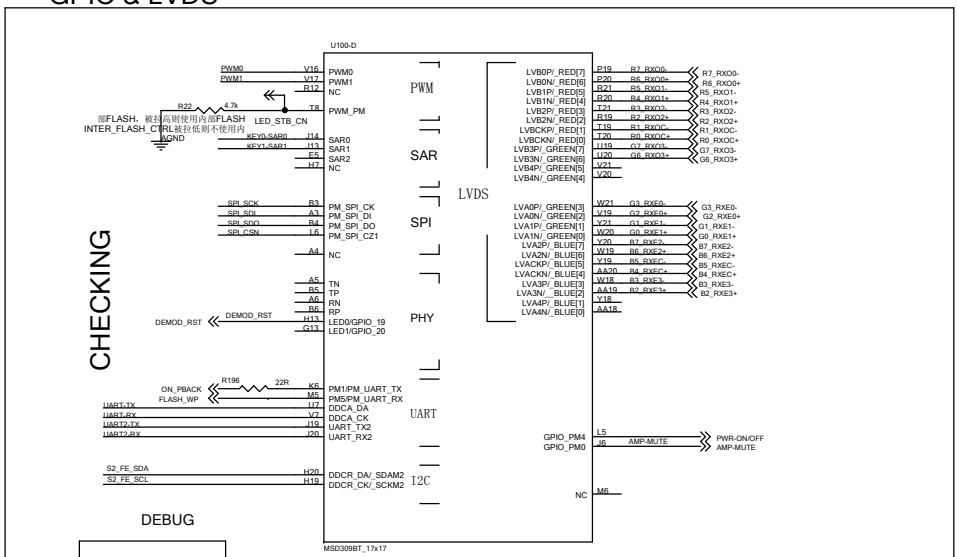

FORESEE TECHNOLOGY

Title	309BT		
Size A	Document Number		Rev 1.0
Date: 2009/11/25	Sheet 1 of 6		

MSD39BT Power interface

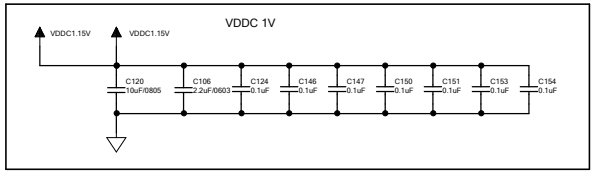

2.5V

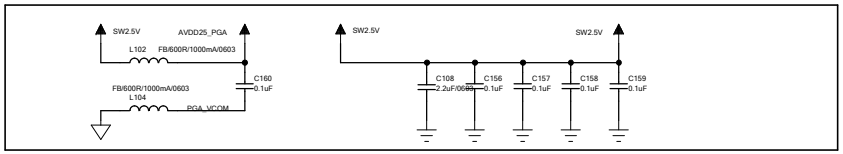

Standby Power 3.3V

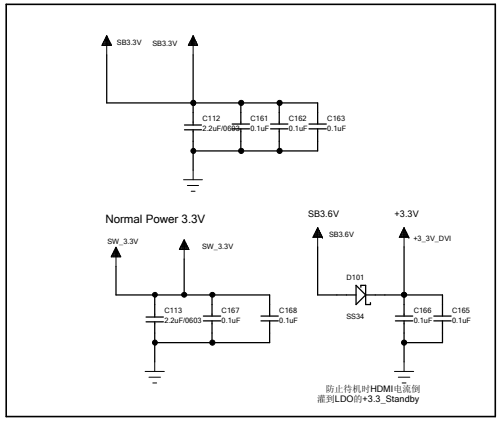

DDR3 1.5V

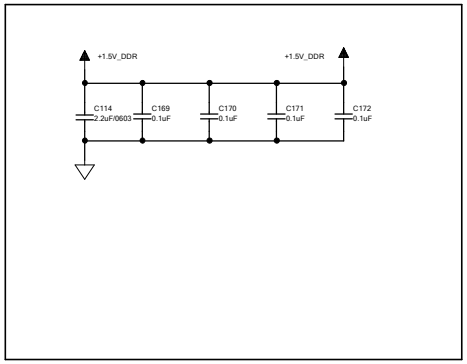

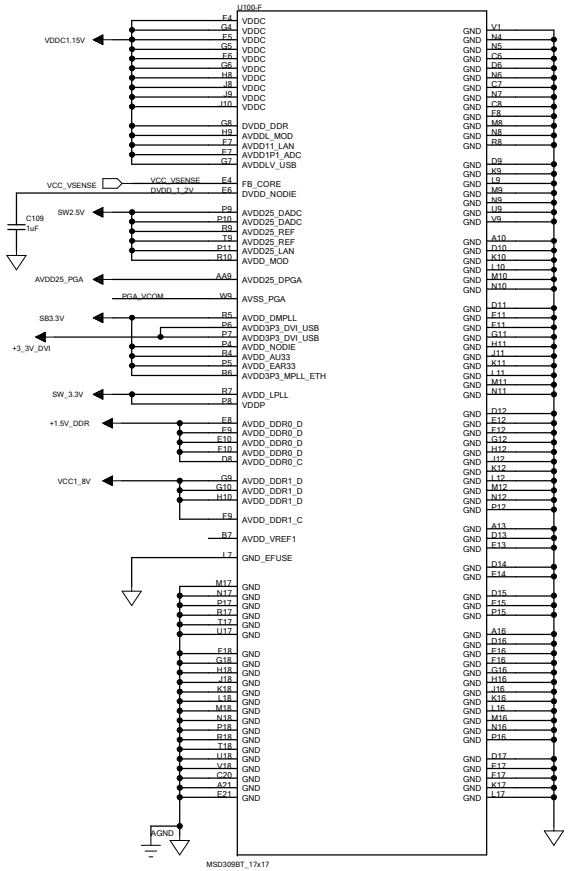

HEADPHONE

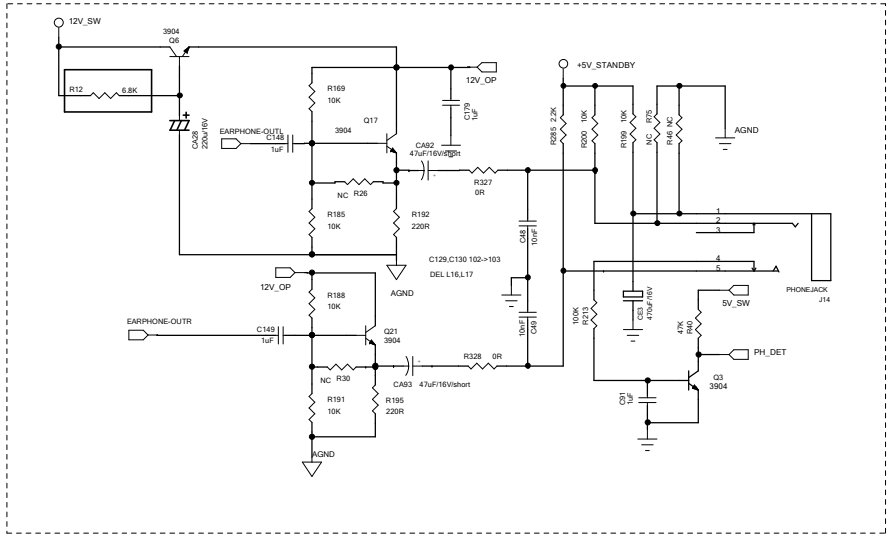

SA7454 AMPLIFIER

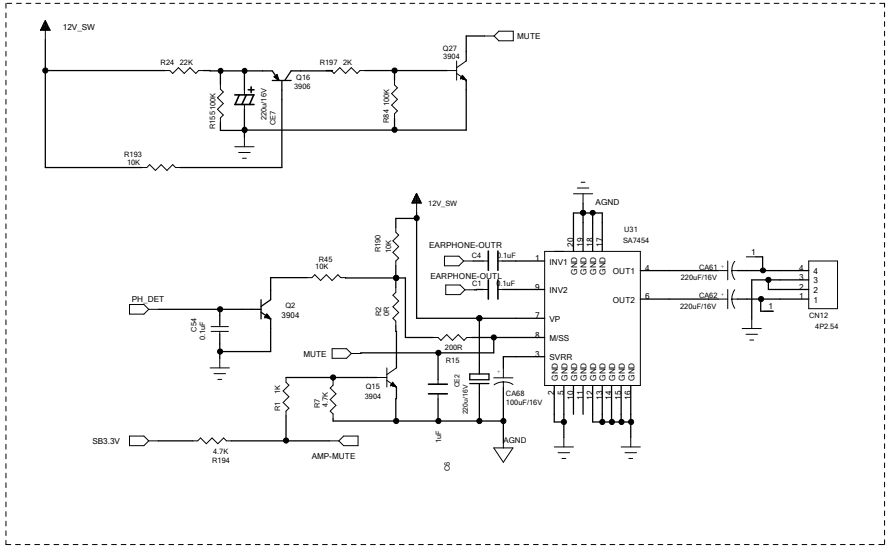

FORESEE TECHNOLOGY	
Title	309BT_POWER SUPPLY
Size A	Document Number
Rev	1.0
Date: 2009/11/25	Sheet 1 of 6

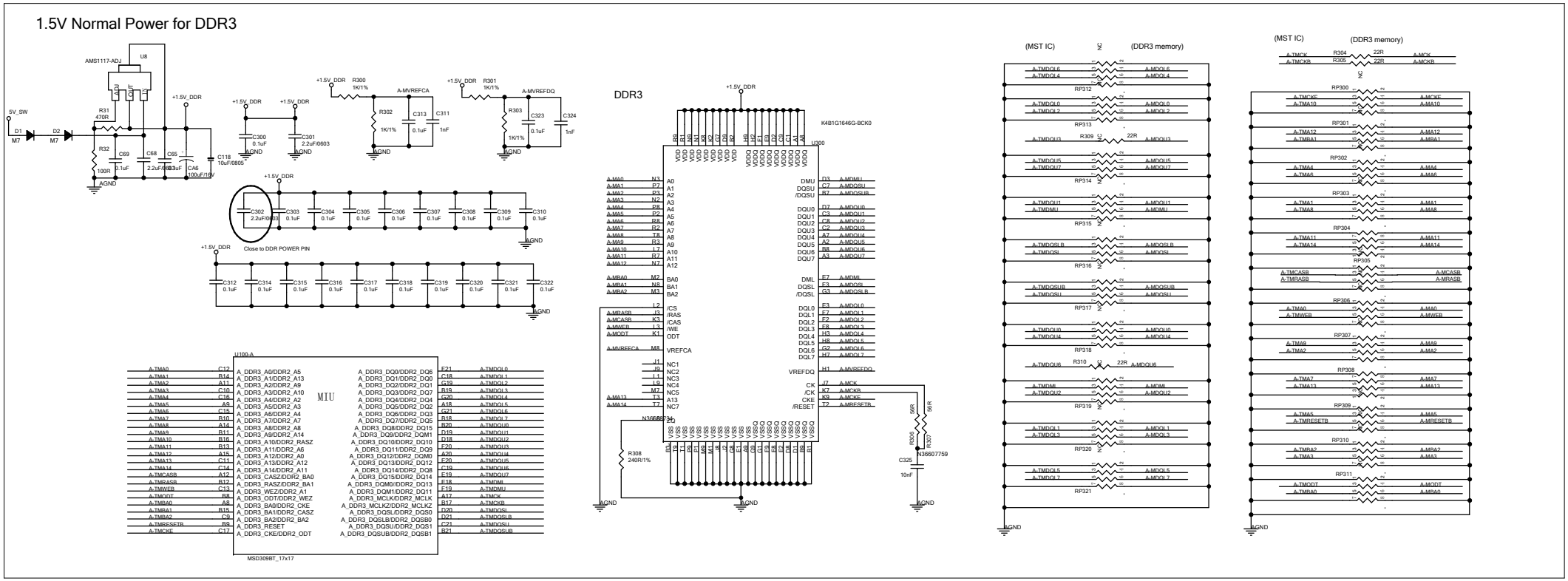

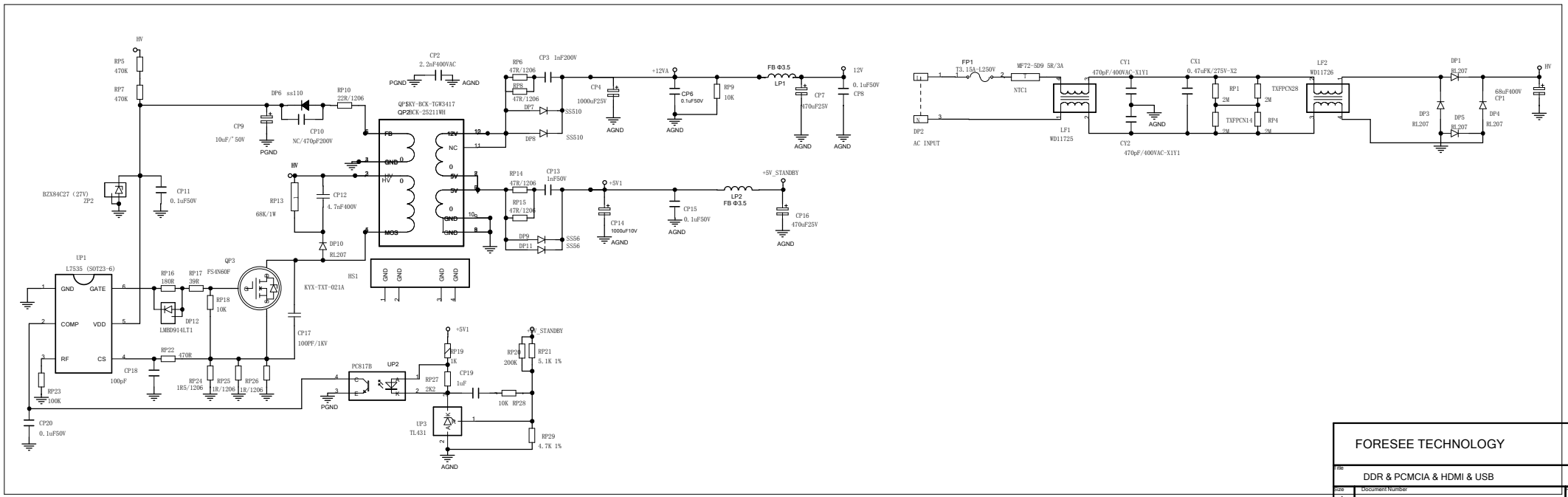

FORESEE TECHNOLOGY	
Title	DDR & PCMCIA & HDMI & USB
Size: A	Document Number:
Rev	1.0
Date: 2009/11/25	Sheet 1 of 6

HDMI

HDMI1

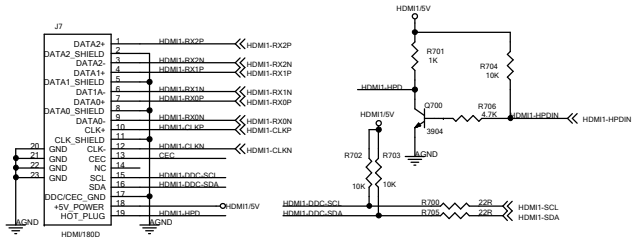

CEC & ARC

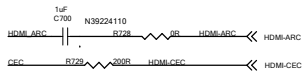

HDMI2

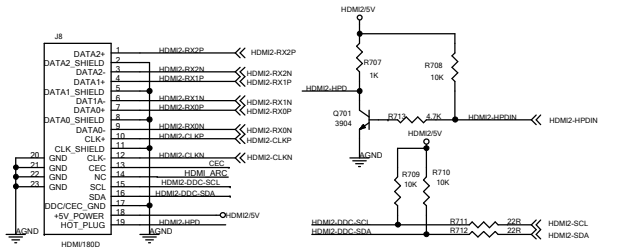

USB INTERFACE

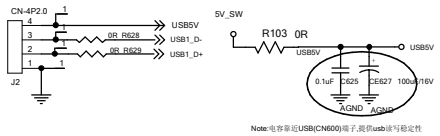

Note:电容靠近USB(CN600)端子,提供usb读写稳定性

AVINPUT

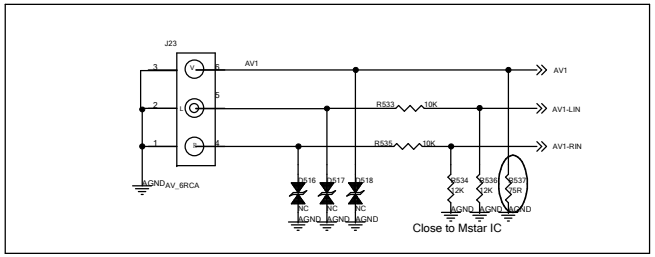

VGA INPUT

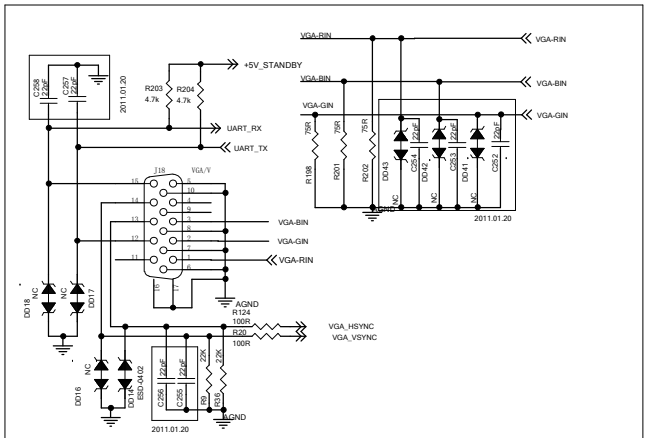

PC AUDIO INPUT

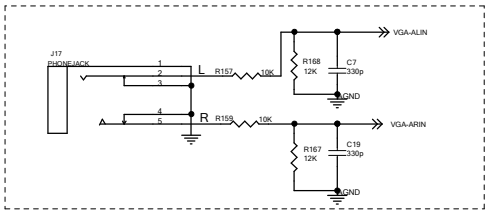

LVDS Connector

Note:靠近Panel端子

Net to other page

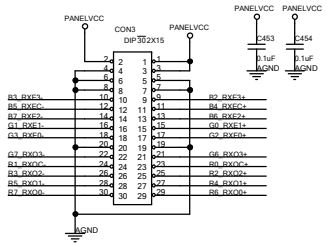

Power decouple

PANEL POWER SUPPLY

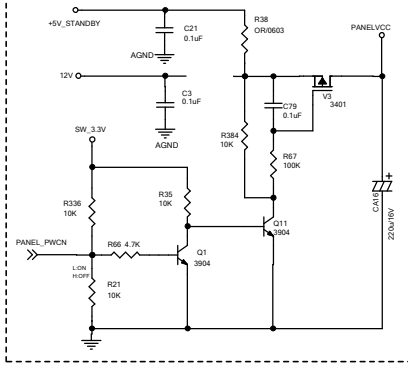

COAXIAL OUTPUT

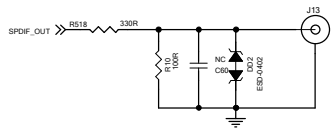

FORESEE TECHNOLOGY

Title	LVDS	
Size A	Document Number	Rev 1.0
Date: 2009/11/25	Sheet 1 of 6	

ATV/DVB-T TUNER

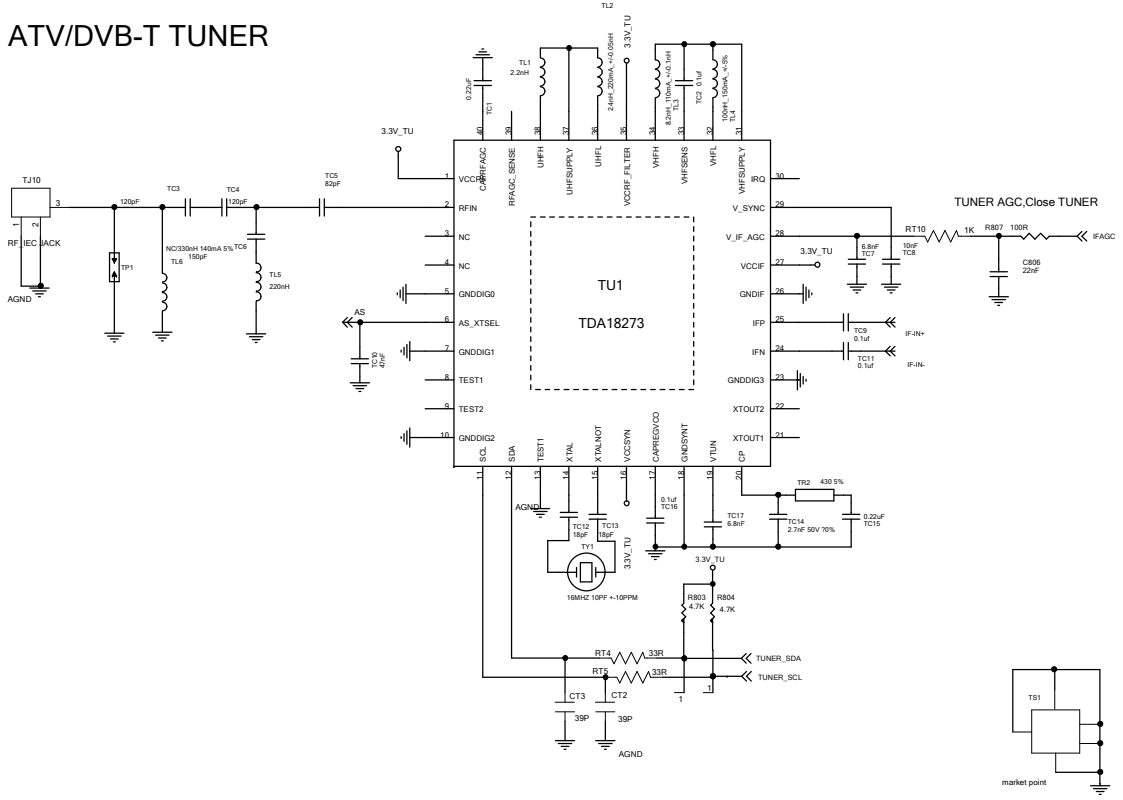

LED BACKLIGHT

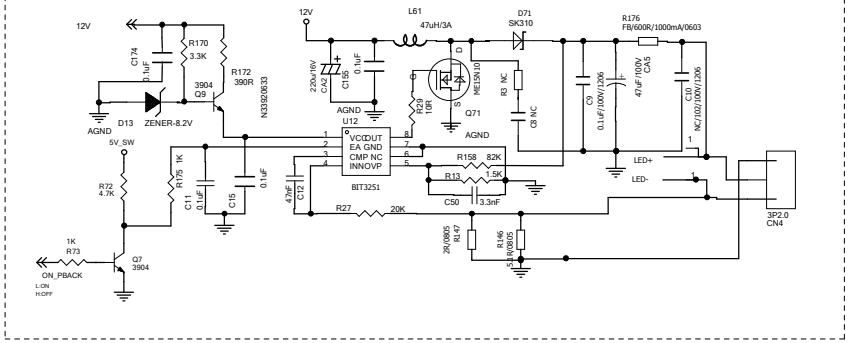

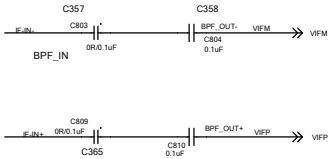

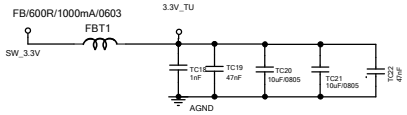

Each of these Vcc pins of TDA18273 is decoupled by a single capacitor (pin 1, 16, 27, 35)

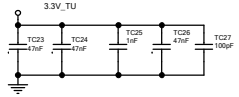

FORESEE TECHNOLOGY	
Title	TUNER
Size A	Document Number
Rev	1.0
Date: 2009/11/25	Sheet 1 of 6

IR BOARD SCHEMATICS

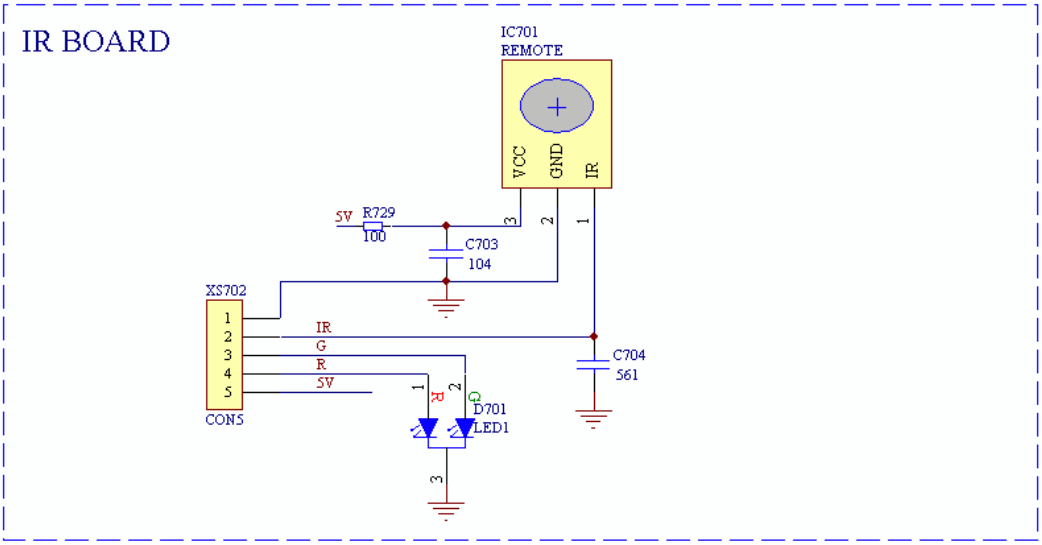

TV&DVD KEY BOARD SCHEMATICS

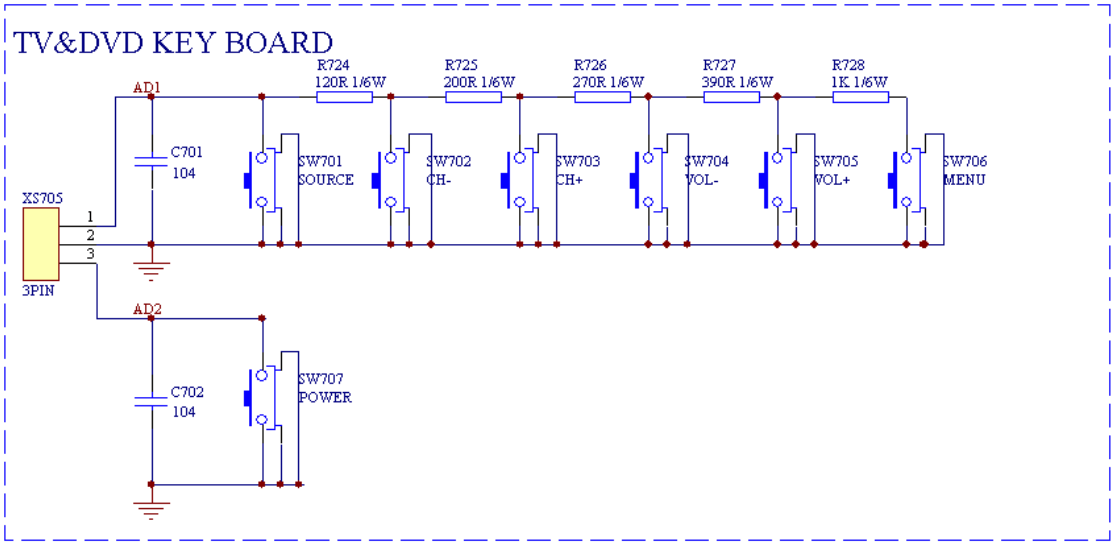

1) How to enter service mode
   Press “Source” button on the remote control, then press”2580”, the service menu will be displayed.

Service mode description

Color Temp: select a color temperature mode that you want to adjust;
R Gain: red gain for white balance adjusting;
G Gain: green gain for white balance adjusting;
B Gain: blue gain for white balance adjusting;
R Offset: red offset for white balance adjusting;
G Gain: green offset for white balance adjusting;
B Gain: blue offset for white balance adjusting;
Aging: to turn on or off aging mode, optional setting: On /Off;
ADC ADJUST: adjust ADC channel difference, only available in VGA mode;
Restore Factory Default: rest seting data to factory default.
Panel Control: select different panel for factory;
DivX:USB Div function switch.

Main Board Software upgrade

1 Please burn the software to USB device. Noted please, software name have to be MERGE309B.bin.

2 Power on TV, and switch source to ATV.

3 Insert USB device to TV, then screen will display a message window to inform you upgrade TV or not. Press” LEFT” direction button to upgrade

4 It will cost 40 seconds to upgrade. In this process, please don’t unplug USB device, don’t power off TV.

Fault finding tree

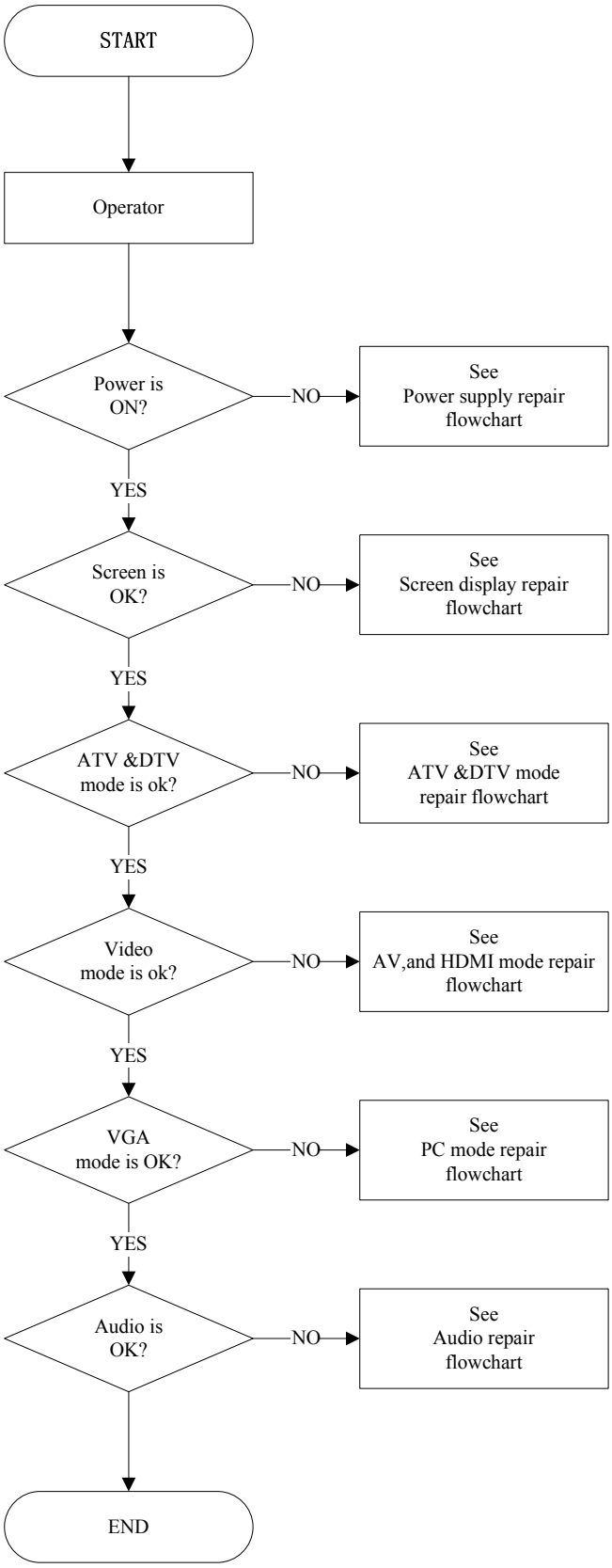

Power supply repair flowchart

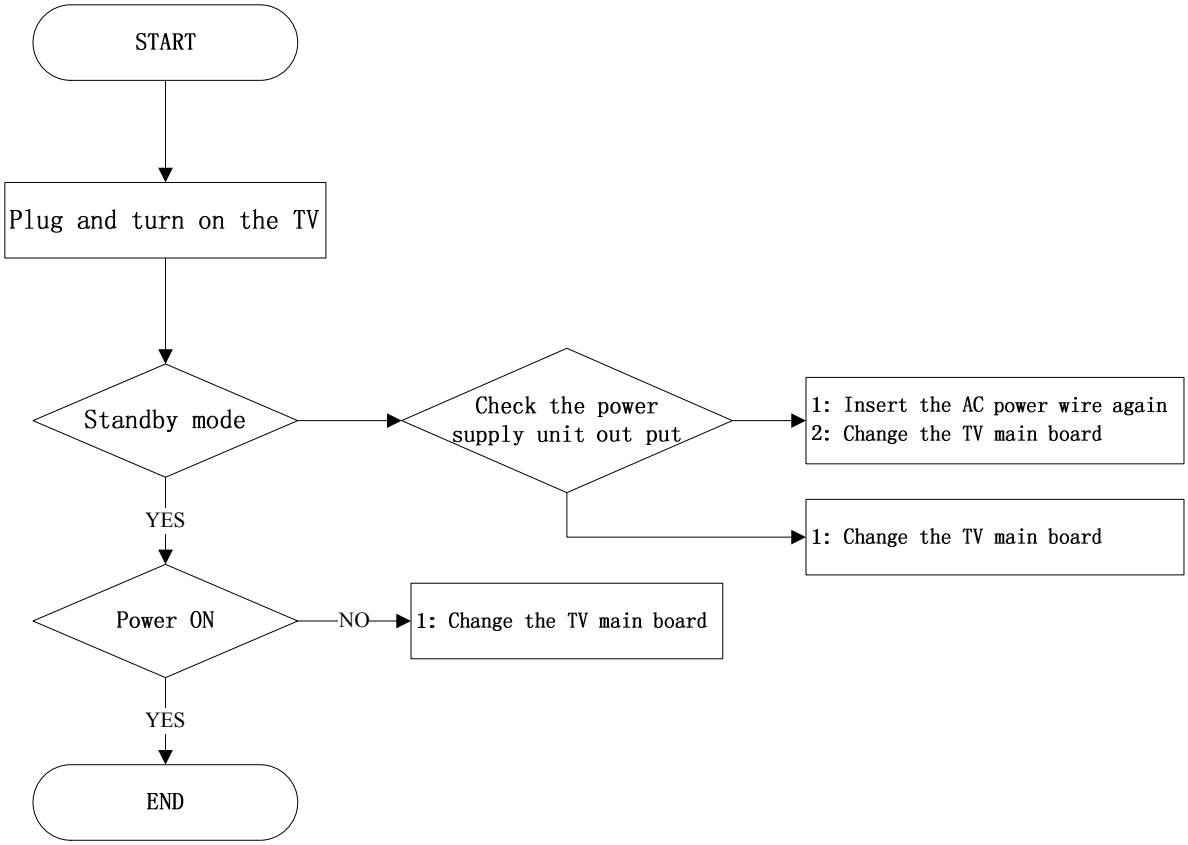

Screen Display repair flowchart

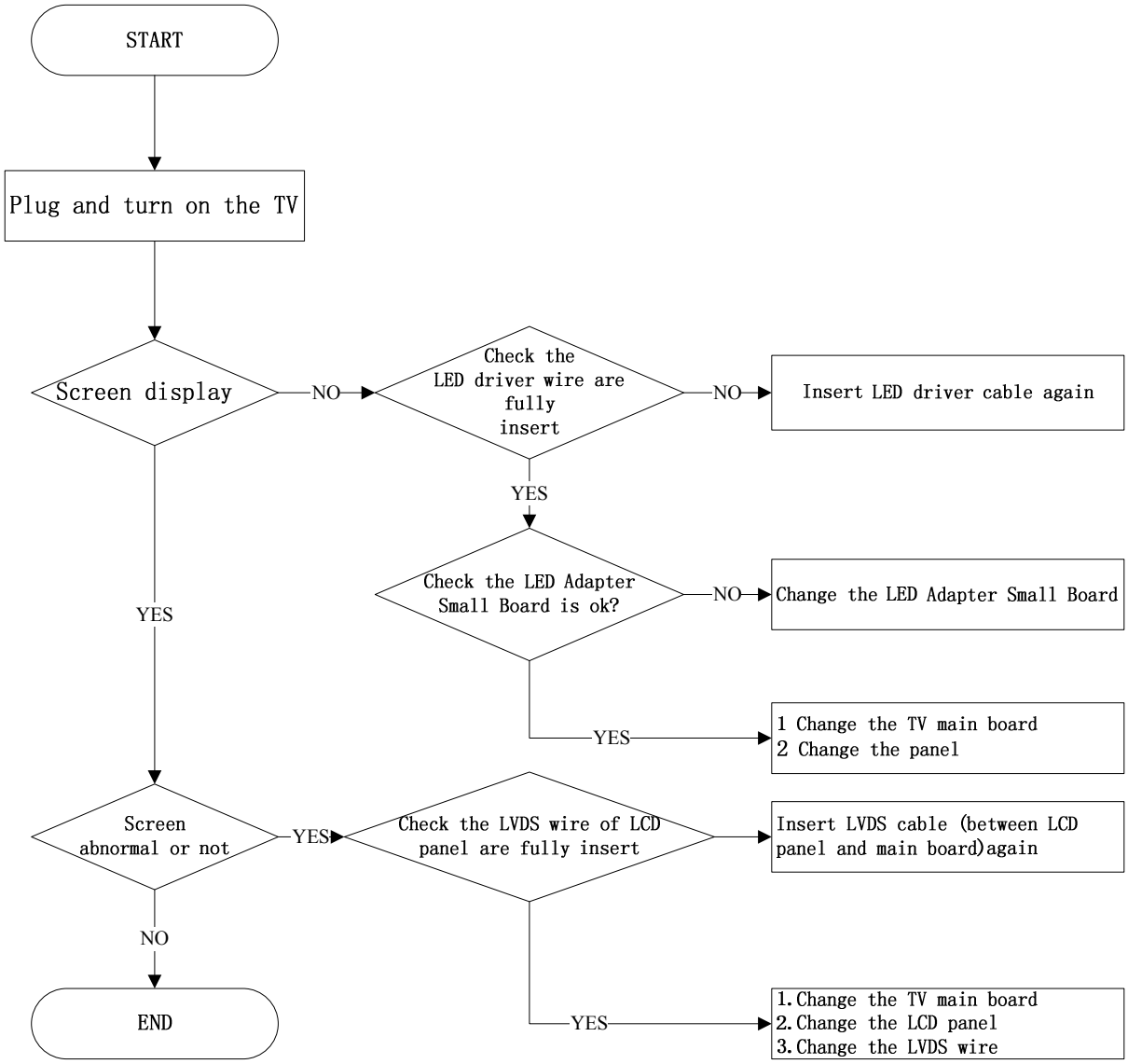

ATV&DTV mode repairflowchart

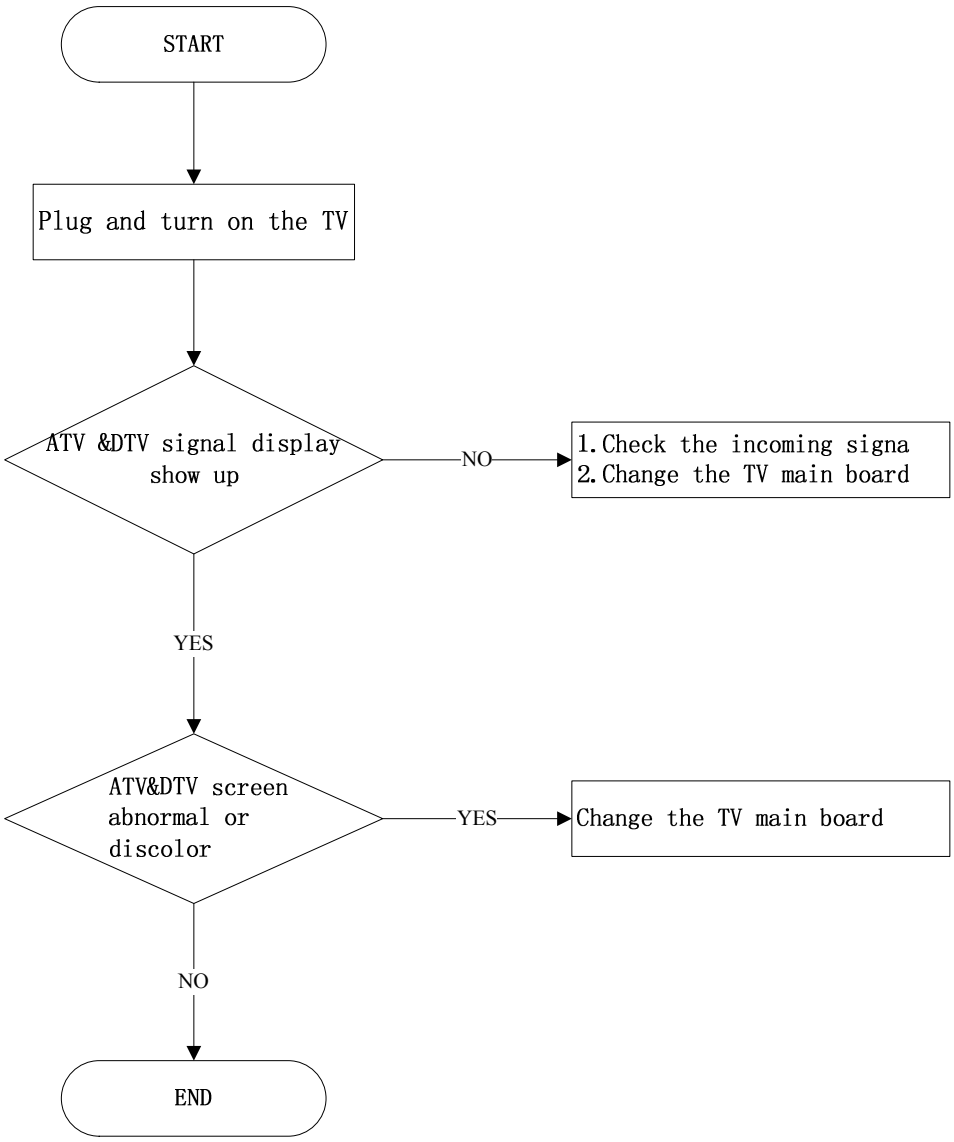

AV,and HDMI1&2 mode repair flowchart

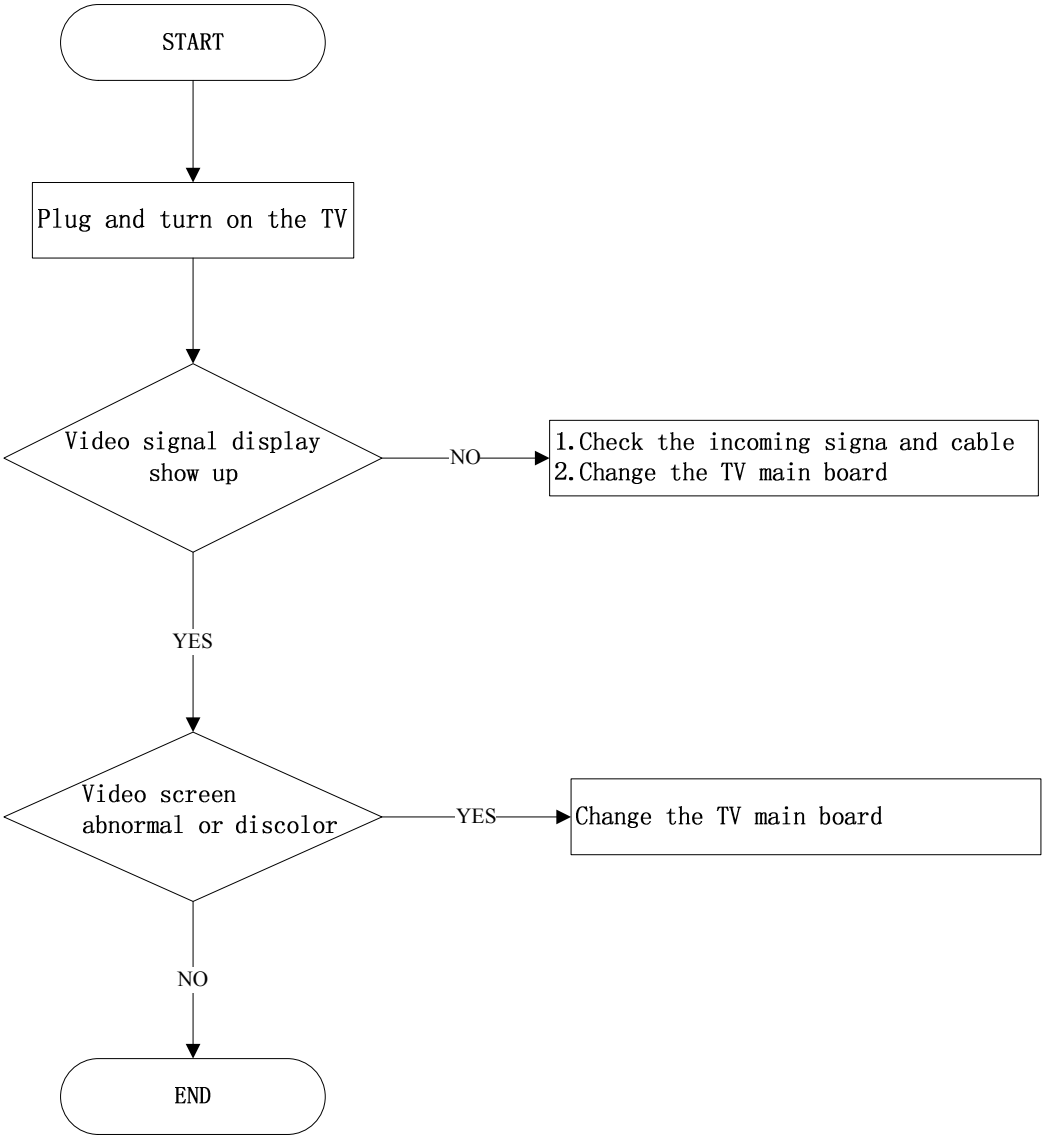

PC mode repairflowchart

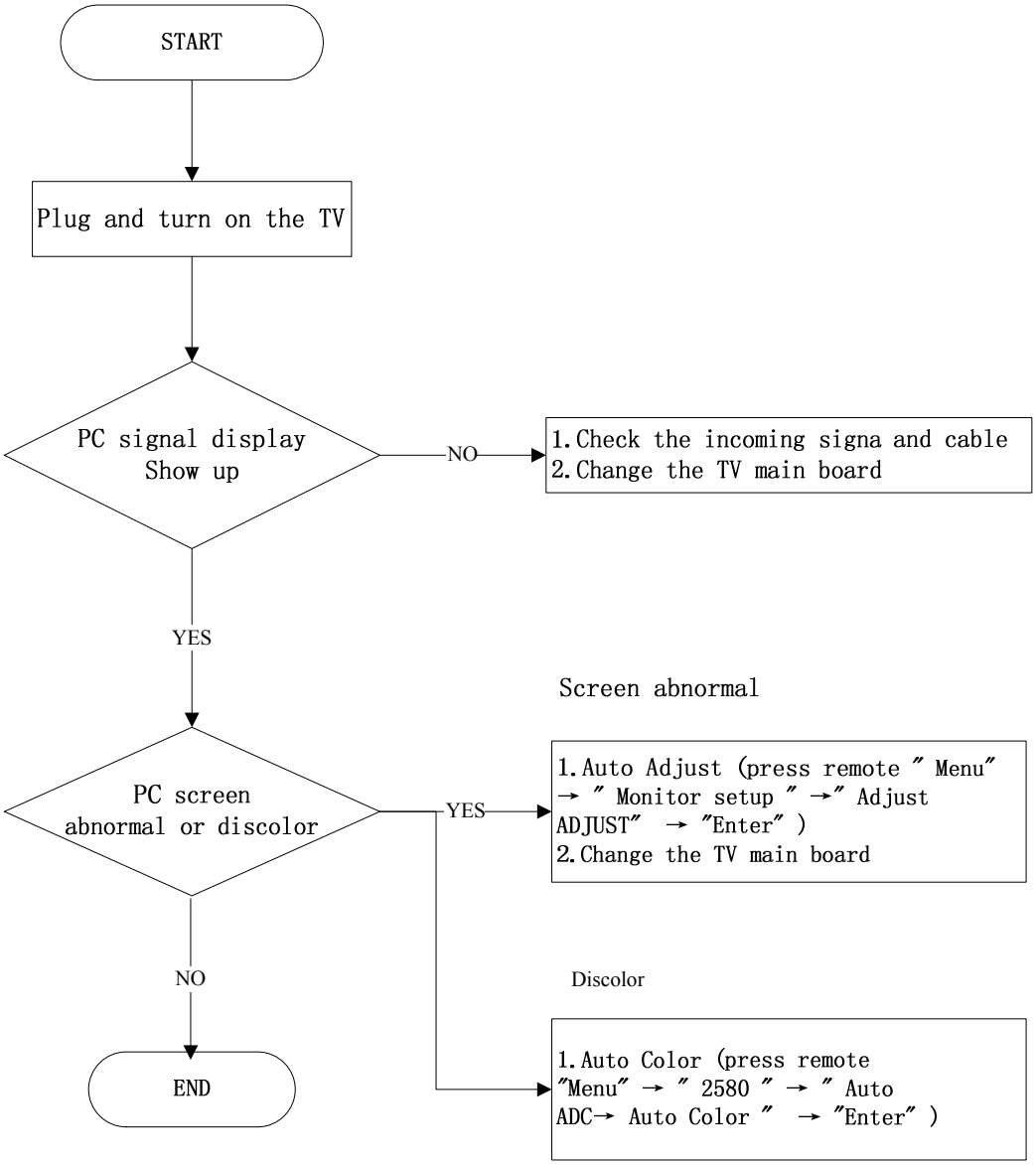

Audio repair flowchart

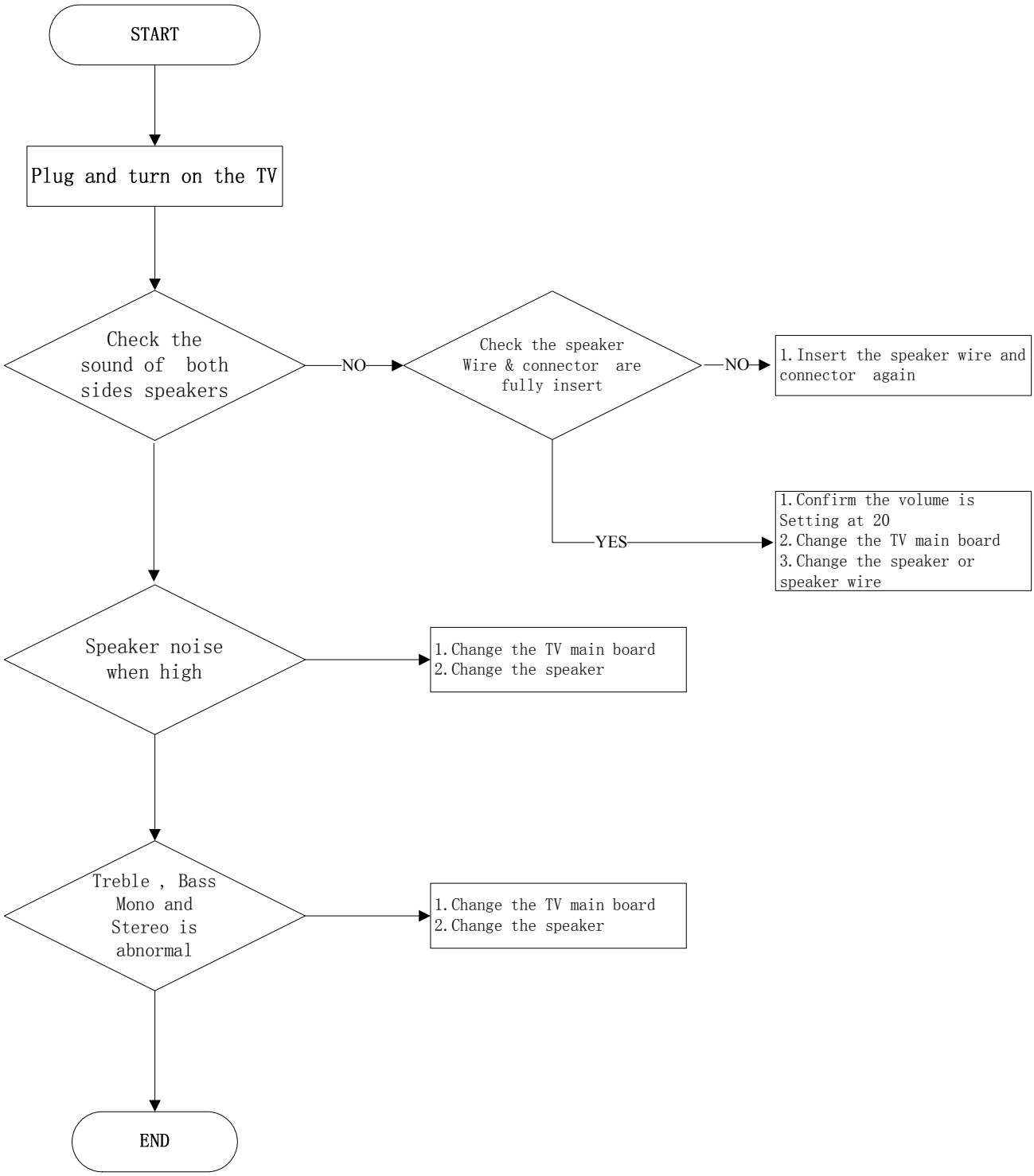

USB Repair Flowchart

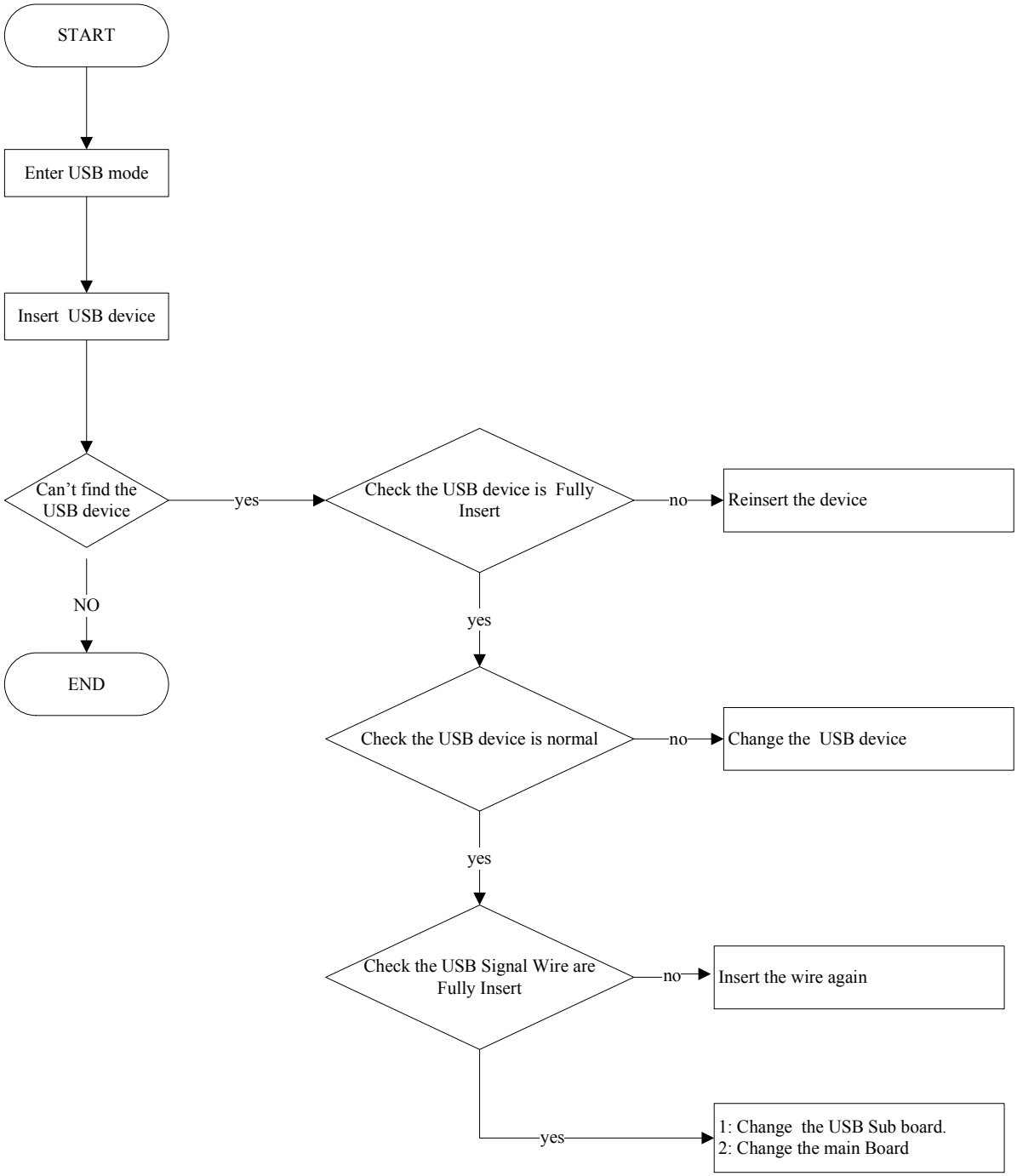

Interface Description

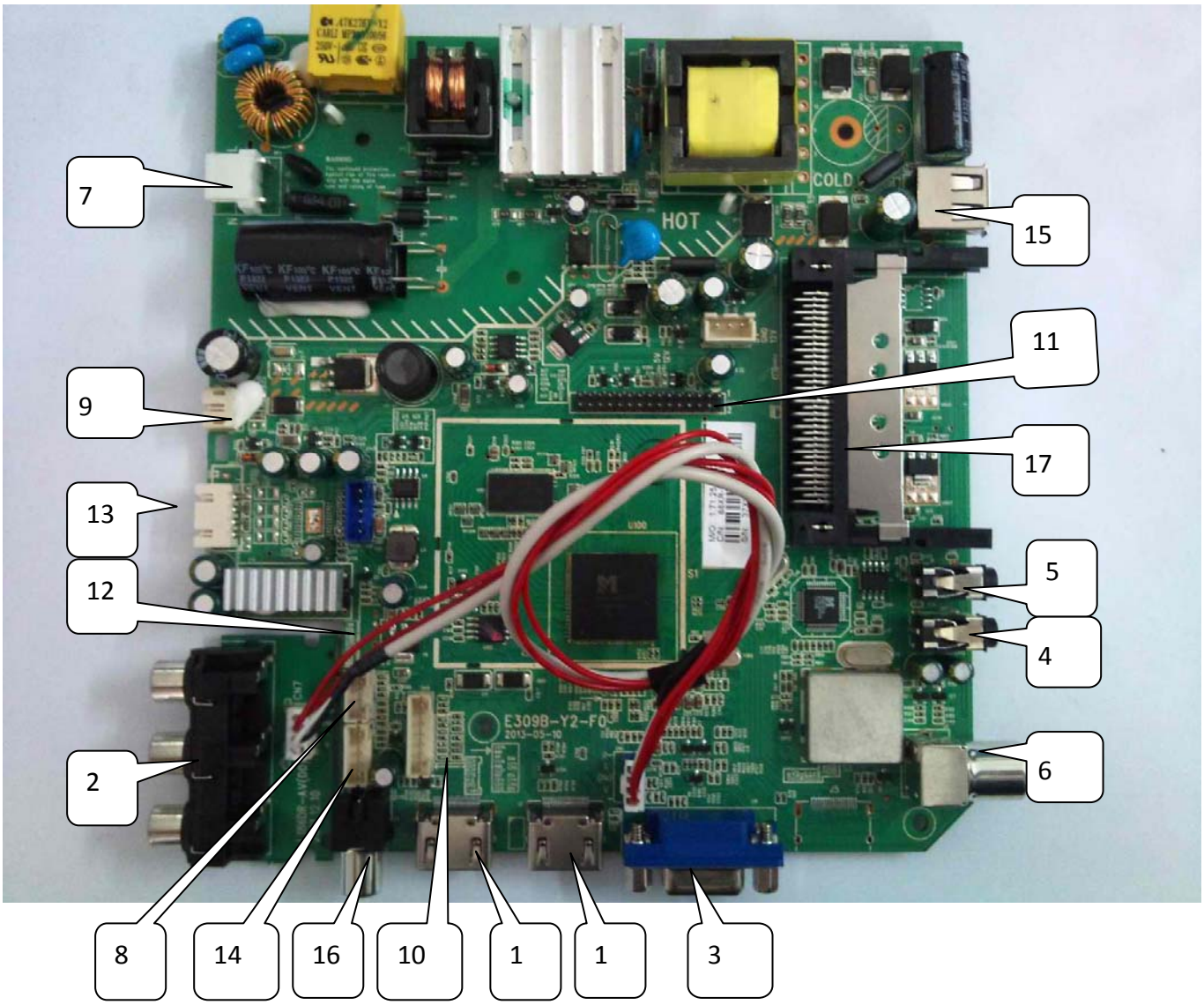

NO	Ref	Description	NO	Ref	Description
1	J2, J4	HDMI Input	10	CN10	DVD Interface
2	CN6	AV Input	11	CON4	LVDS Interface
3	J18	VGA Input	12	CN2	DVD power supply jack
4	J17	PC Audio Input	13	CN12	Speaker Jack
5	J6	Headphone output	14	CN6	IR Jack
6	J11	RF Input	15	J22	USB 2.0 input
7	DP2	AC IN	16	J13	Coaxial output
8	CN104	Key Jack	17	CONN2	PCMCIA SLOT
9	CN4	LED Driver Jack			

★CN4(3PIN2.0) LED Driver Jack

NO.	Definition	Description
1	GND	GND
2	LED-	LED Driver Negative
3	LED+	LED Driver Positive

★CON12(4PIN2.54) Speaker jack

NO.	Definition	Description
1	R	Right Speaker Output
2	GND	GND
3	GND	GND
4	L	Left Speaker Output

★ CN104:(5PIN2.0) Key jack

NO.	Definition	Description
1	K1	Key 1 (ADC Input)
2	GND	GND
3	K2	Key 2 (ADC Input)
4	VCC	VCC5V

★CN10: (7PIN2.0) DVD INTERFACE

NO.	Definition	Description
1	SCK	SPI Communication Protocol SCL
2	SDA	SPI Communication Protocol SDA
3	DRIN	Right Channel of DVD Audio Input
4	STB	SPI Communication Protocol STB
5	DLIN	Left Channel of DVD Audio Input
6	CVBS	DVD Video Signal
7	GND	GND

★CN2: (5PIN2.0) DVD Power jack

NO.	Definition	Description
1	5V	DVD 5V Power Supply
2	5V	DVD 5V Power Supply
3	GND	GND
4	GND	GND
5	GND	GND

★CN6: IR&LED jack

NO.	Definition	Description
1	GND	GND
2	IR	Remote Receiver
3	LED-G	Green Indicator
4	LED-R	Red Indicator
5	5V	Power Supply

★DP2: (2PIN3.94mm) AC Power Input

NO.	Definition	Description
1	N	Internal AC220V Power Supply
2	L	Internal AC220V Power Supply

★J22: (4PIN2.0)

NO.	Definition	Description
1	5V	USB 5V Power Supply
2	D-	USB Negative Signal
3	D+	USB Positive Signal
4	GND	GND

★CON4: LVDS Interface

NO.	Definition	Description
1	LCD-VDD	Power for Panel
2	LCD-VDD	Power for Panel
3	LCD-VDD	Power for Panel
4	GND	GND
5	GND	GND
6	GND	GND
7	GND	GND
8	GND	GND
9	EDA3+	LVDS EVEN3+ Signal
10	EDA3-	LVDS EVEN3+ Signal
11	ECK+	LVDS EVEN Clock + Signal
12	ECK-	LVDS EVEN Clock - Signal
13	EDA2+	LVDS EVEN2 + Signal
14	EDA2-	LVDS EVEN2 - Signal
15	EDA1+	LVDS EVEN1 + Signal
16	EDA1-	LVDS EVEN1 - Signal
17	EDA0+	LVDS EVEN0 + Signal
18	EDA0-	LVDS EVEN0 - Signal
19	GND	GND
20	GND	GND
21	ODA3+	LVDS ODD3 + Signal
22	ODA3-	LVDS ODD3 + Signal
23	OCK+	LVDS ODD Clock + Signal
24	OCK-	LVDS ODD Clock - Signal
25	ODA2+	LVDS ODD2 + Signal
26	ODA2-	LVDS ODD2 - Signal
27	ODA1+	LVDS ODD1 + Signal
28	ODA1-	LVDS ODD1 - Signal
29	ODA0+	LVDS ODD0 + Signal
30	ODA0-	LVDS ODD0 - Signal