TV Productor Service Manual

DATE： 2014-03-25

YOUR COMPANY NAME:

YOUR MODEL NAME:

Production & Function Describtion:

Action：CV9202L-T

Function： USB、HDMI、CVBS/AUDIO、 PC AUDIO IN 、VGA、ATV、COAXIAL OUT 、EARPHONE OUT

TV System：PAL+SECAM

Approved Signatures:

Approved By Customer Project Leader	Reviewed By Project Leader	Issued By D.C.C.

Express Luck Industrial Limited

Address:No.88,BaoTong,NanRoad,Xikeng,HengGangTown,LongGangDistric,Shenzhen,Guangdong, China

TEL ： 0086-0755-89739888 FAX ： 0086-0755-89739666

1. Basic Function & Specifications
2. Maintenance & Safety
3. Instruments
4. Software Upgrade
5. Main Function & Specifications
6. Main board circuit diagram
7. Main board service manual
8. Power board Function & Specifications
9. Power board circuit diagram

1. Basic Specifications

Working Temp：0～40℃
Storage Temp：-20～60℃
Humidity（Working）：10～90%
Humidity（Store）：10～90%
LED Lifespan（50 Lum，Tube current < Rating）：60000 hour（Il=4.5Ma 25℃）
MTBF:50000 hour (Panel Module NOT inculded)
Power requirement：Voltage 100~240 V 50 / 60 Hz
(Note: The above specifications are suitable for most of the TV models, and for your reference only.)

2. Maintenance & Safety

2.1 Safety Warning:
(1) The inside key components in the LED must be offered and replaced by qualified and
appointed manufacturer. Otherwise it may generate electricshocks,
fires or other important unsafety cases.
(2) Don't try to change the circuits without authorized permission.
(3) Ensure to study the maintenance and service manual thoroughly before doing any of
the maintaining actions.
2.2 High Voltage Warning:
Please be highly noted the high voltages in the circuit.
2.3 Electricshocks and Fires Warning:
*Connect the insulate transformer between the AC current to the LED before repairing the panel.
*Take care of the Soldering Pad related to the high voltage circuit. When there occurs
short-circuit case, please replace the overheated components in time.
*All protective equipments must be re-installed according to the original design.
*Check the rosin joints, stack welds and the insulations, ensure there is no objection attached.
2.4 Antistatic Warning:
*The inner circuit boards in the LED TV are sensitive to the statics. Please take care of the
ESD protection when replace the circuit boards.
*The circuit boards must be packed by antistatic bags.
*Please wear antistatic ring and gloves when during repairing works.
2.5 Attention:
LVDS VDD – if the LED is in 5V, it must be switched to the setting of 5V. And

if the LED is in 12V, it must be switched to the setting of 12V. (Switch setting: CN9 -- 5V or 12V)

3. Instruments

3.1 Multimeter:
Max Input Current : over 1A / Max Input Voltage : 500Vdc
Measurement Range : 10Mvr~100Vdc / Accuracy : 0.03%
3.2 Oscillograph
Frequency Band : over 20M /Input Impedance : over 1M
Input Capacitance : below 30pF / Max Input Voltage : 250V
3.3 PC: XGA (1024X768@60Hz)
3.4 HD Singal Generator: 480P 576P 720P 1080i@50/60HZ
3.5 DVD Player: Audio/Video output, S-VIDEO output, HDMI output.
3.6 VGA cable, S-VIDEOcable, RCA cable, YpbPr cable and HDMI cable.

4. Software Upgrade

The chip inside the LED is designed with a FLASH ROM memory program: it can be erased
and reprogrammed, it can be also updated via the USB port. the program is related to the chip fucntion ---Different functions of chips need to be planted with different versions of prgrams.
Please ugrade the new software by the USB port the instruction steps below:
-------Please copy the new software to the USB
-------Power ON the TV and press MENU to display the main menu ,then press / to the
OPTION menu. And then select the software in the root of your USB memory , Press ENTER .then press to update and to cancel.
Remarks: When the first upgrading is finished, the action of turning on the tv will be a little slow. So when you turn on the TV at the first time, you need to press the "power" key on the remote control several times until you turn on the tv. Turning on the TV at the first time is very important, you need to operate it carefully to avoid the upgrading is not successful.

LCD TV CONTROL BOARD SPECIFICATION

MODEL : CV9202L-T-12

AUTHOR :

CHECKED BY :

APPROVED BY :

PUBLISHED DATE: Aug. 16, 2013

Shenzhen Cultraview Digital Technology CO., LTD

6F, M-6 Building, Maqueling, High-Tech Park Zone, Nanshan, Shenzhen

TEL.: +86-0755-26507726 FAX: +86-0755-26509299

http:// WWW.CULTRAVIEW.COM

CULTRAVIEW

ITEM

1. CHANGE THE LIST OF UPGRADES 2
2. GENERAL DESCRIPTION 3
3. FEATURES 4
4. PRESET MODE FOR USB 5
5. ELECTRICAL CHARACTERISTICS 6
6. SUBSTITUTABLE PRIMARY MATERIALS 7
7. PICTURE 9
8. INTERFACE DEFINITION 12
9. CONFIGURATION 16
10. APPLICATION REQUIREMENT 18
11. EXCURSUS 19

CULTRAVIEW

1. CHANGE THE LIST OF UPGRADES

Version	Description	Page	redaction	Checked	Date
V1.0	First Release	All	CH.Huang		Aug. 16, 2013

2. GENERAL DESCRIPTION

This product is digital and analogue TV board, it can receive the PAL/SECAM analogue television and digital television (DVB-T/C/T2) signals. It supports H.264 Video decode. It is applicable to Europe (include UK), etc.

- Supports DVB-T /T2 MPEG-4 extended ASP up to 1080p@30fps;
- Supports H.264 MP/HP@L4.1 for SD and HD decoding;
- Supports DVB-C 16,32,64,128 and 256-QAM (Option);
- Supports USB 2.0 multimedia play, supports audio and video play; supports txt and picture browse.
- Analogue and digital HD port input signal largest support 1080P.
- Support analogue & digital 1000 Pages Teletext
- The largest support various TFT-LCD 1920x1080 resolutions module.
- HDMI 1.4a compliant and DVI 1.0 compliant receiver support up to 225MHz @1080P 60Hz with 12-bit deep color resolution, HDCP 1.4a compliant receiver.
- Supports 3D Video Decoder NTSC-M,NTSC-J,NTSC-4.43,PAL I(B,G,H,D,N), PAL-M,PAL-N,PAL-60 and SECAM standards;
- Enhanced motion adaptive 3D Y/C separation comb filter for NTSC/PAL system;
- Supports USB update.
- Supports Video SDTV at 480i/576i and 480p/576p;
- Supports Video HDTV at 720P and 1080i and 1080P;
- Supports PC RGB input up to UXGA@60Hz(165MHz);
- Reliable EMC and ESD handle

CULTRAVIEW

3. FEATURES

PANEL	Type	TFT-LED
	Resolution	Max. 1920X1080
	Interface	Single/ Double LVDS
	Voltage	3V3,5V, 12V
ATV	Receiving range	49MHz – 863MHz
	Input Impedance	75Ω
	Video System	PAL ,SECAM
	Sound System	BG, DK, I, L/L’
		NICAM/A2
DTV	Receiving range	VHF (174MHz – 230MHz)
		UHF (474MHz - 862MHz)
	Input Impedance	75Ω
	Bandwidth	7MHz/8MHz
	Modulation	DVB-T:COFDM 2K/8K QPSK, 16QAM, 64QAM
		DVB-C:16QAM, 32QAM, 64QAM, 128QAM, 256QAM
		DVB-T2:COFDM 2K/8K QPSK,16QAM,64QAM,256QAM
	Video System	MPEG 2 MP@HL, MPEG-2, MP@HL, H.264
	Sound System	MPEG-1 Layer 1/2, MPEG-2 Layer 2, DD, DD+
RGB	Sync	H: 30-75KHz V: 56-75Hz
	Video Level	0.7Vp-p@75ohm
	MODE	Max 1920X1080@60Hz
AV	Color system	PAL/NTSC/SECAM
	Video Level	1Vp-p@75ohm
	Audio Level	500mV rms
YPbPr	Video Level	Y:1Vp-p@75ohm, PbPr:0.7Vp-p@75ohm
	Audio Level	500mVrms
	Format	480i, 480p, 576i, 576p, 720p, 1080i, 1080p
HDMI	Video	Standard TMDS
	Format	480i, 480p, 576i, 576p, 720p, 1080i, 1080p
SCART	Video	CVBS&RGB input, CVBS output
	Video output/input	RBG: 0.7Vp-p@75ohm
		CVBS: 1Vp-p@75ohm
	Audio output/input	500mVrms
Keyboard	Power/Menu/Source/ Up/ Down/ Left/ Right	
OSD Language	English/French/German/Spanish/Italian	
Audio Amplifier	2 X3W @ 4ohm THD<10%	
Power input	5V&12V、12V	
Standby	< 0.2W(Main Board Only)	

CULTRAVIEW

4. PRESET MODE FOR USB

USB FORMAT MODE

Type	Container	Video Decoder	Max Resolution
MOVIE	AVI	MPEG-4 ASP;H.264;DivX;Xvid WMV 9 / VC - 1	1920 x 1080
		MPEG-4 SP	CIF (352 x 288) QCIF (176 x 144)
		MJPEG	1280 x 720
	MPEG 1/2	MPEG-1 Video MPEG-2 Video	1920 x 1080
	MPEG4	MPEG-2 Video;MPEG-4 ASP; H.264;Xvid;MJPEG;H.264	1920 x 1080
	WMV	WMV 9 / VC-1	1920 x 1080
	Real Media	RV30 / RV40	1920 x 1080
	Flash	Sorenson H.263; H.264	1920 x 1080
	QuickTime	MPEG-4 ASP; H.264;MJPEG	1920 x 1080
	ASF	WMV3 / WVC1; MP4S / M4S2	
	Matroska Video	MPEG-2 Video; MPEG-4 ASP; H.264;Xvid; DivX;DivX Plus HD; RV30 / RV40; WMV9 / VC-1;	1920 x 1080
	DivX	MPEG-4 ASP; DivX; Xvid;	1920 x 1080
	TS Stream	MPEG-2 Video;H.264; WMV 9 / VC-1;	1920 x 1080
Type	**Container**		**Max Resolution**
PHOTO	JPEG		165370
	Progressive JPEG		61648
	BMP		101439
	PNG		101439
	GIF		
	TIFF		
MUSIC	WAVE		LPCM; ADPCM
	WMA		WMA STD; WMA Prof
	AAC		AAC-LC / HE-AAC
	AC3		AC3; E-AC3
	MPEG		MP1; MP2; MP3; AAC-LC; HE-AAC;
	Read Audio		AAC / HE AAC; Cook
	Ogg		Vorbis
	FLAC		FLAC
	DTS		DTS

CULTRAVIEW

Special Note：

1) USB only supports PHOTO, MUSIC and MOVIE. The system automatically classified files, only show the supported files.

2）Supports hard disk，the maximum storage capacity is **1T**.

3) Photo Not support EXIF format.

4) Flash non-support animation.

5) Support for text files.

5. ELECTRICAL CHARACTERISTICS

Power	Symbol	Range	Max Current	Ripple
Built-In Power Supply				
VCC_+5V	+5V	+5.0V--+5.2V	2A	50mV
VCC_+12V	+12V	+12V--+12.5V	1.5A	100mV
Adapter Power Supply				
VCC_+12V	+12V	+12V--+12.5V	2A	100mV
The current of panel, Inverter and extension modules are not included in max current.				

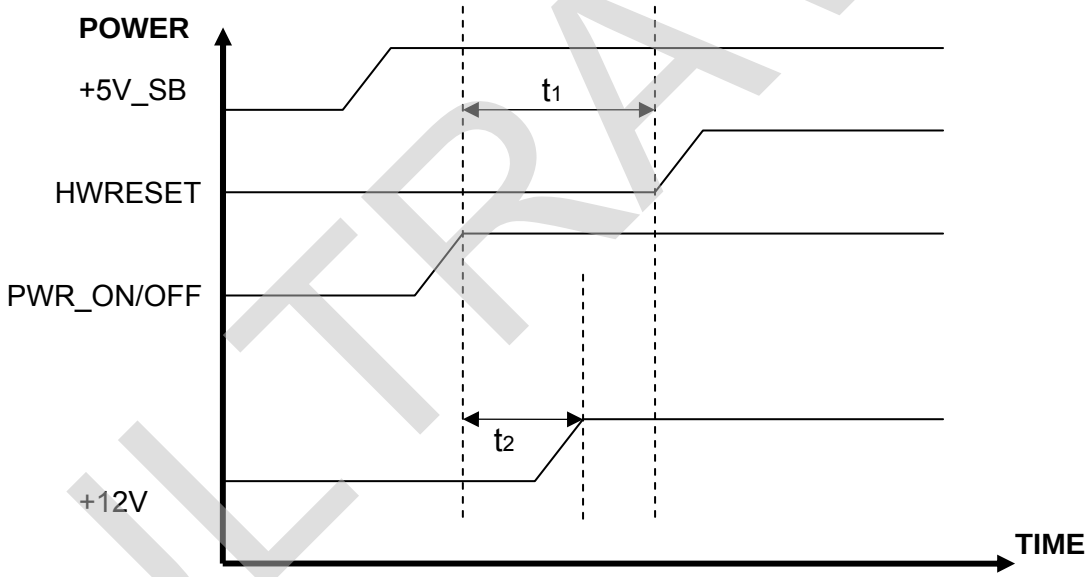

alternation	DESCRIPTION	Min	Type	Max	Unit
t1	Hardware Reste Width	50	200	/	ms
t2	Pwr_on/off t_{setup} TO +12V t_{setup}	/	/	150	ms

CULTRAVIEW

6. SUBSTITUTABLE PRIMARY MATERIALS

General materials

Including SMT capacitors, SMT resistors, diodes, transistors, MOSFET, connectors, common inductance, electrolytic capacitor, PCB etc., and having no obvious changes in appearance or color. Our company has two or three alternative suppliers with these materials, maybe we will alternative use these materials for follow-up mass production due to delivery time, stock or other reasons. We no longer notice your company the alternative materials used. If necessary, you can apply for using related materials (mention as above) in samples stage.
(Note: The alternative materials which have been accepted by our materials confirmation department and PP will enter our system.)

Key materials

Including crystals, LDO, SAW Filter, DC-DC, Amplifier, Audio &Video switch, and having obvious changes in appearance and color of general materials, Our company has two or three alternative suppliers with these materials (See following table for detail), maybe we will alternative use these materials for follow-up mass production due to delivery time, stock or other reasons. We will notice your company the alternative materials used in written form. If necessary, you can apply for using related materials (mention as above) in samples stage.

Name	Main Type	Brand	Backup Type	Brand
LDO	BL1117	BL	SA1117	SA
			BM1117	BM
Audio Amplifier	YD1517P	YD	TDA1517P	NXP
			BM1517P	BM
Crystal	27MHz +-20PPM 20PF HC 49US	RS	27MHz +-20PPM 20PF HC 49US	ZG
				TJ
Crystal	24MHz +-20PPM 10PF HC 49US	RS	24MHz +-20PPM 10PF HC 49US	ZG
				TJ
Crystal	20.48ZHz +-20PPM 20PF HC 49US	ZG	20.48MHz +-20PPM 20PF HC 49US	RS
				TJ

Core materials

Including DDR, FLASH, TUNER, and the materials related to change software. Our company has two or three alternative suppliers with these materials (See following table for detail), maybe we will alternative use these materials for follow-up mass production due to delivery time, stock or other reasons. We will notice your company in written form and we must get your company confirm whether accept before using the alternative materials.

CULTRAVIEW

Name	Main Type	Brand	BackupType	Brand
Chipset	SPV9202B	SUNPLUS	--	--
DDR	K4B1G1646G-BCK0	SAMSUNG	H5TQ1G63DFR-PBC	HYNIX
			NT5CB64M16DP-DH	NANYA
			W631GG6KB-12	Winbond
FLASH	W25Q64FVSIG	WINBOND	EN25Q64-104HIP	EN
			W25Q64BVSSIG	Winbond
TUNER	SIL2158	Siliconlabs	SIL2157	Siliconlabs
			18257	NXP
			18274	NXP

CULTRAVIEW

7. PICTURE

The picture is for a reference only,the actual item is the standard.

The optional connectors and terminals are marked with “*” .

Board Type 1:

TOP VIEW

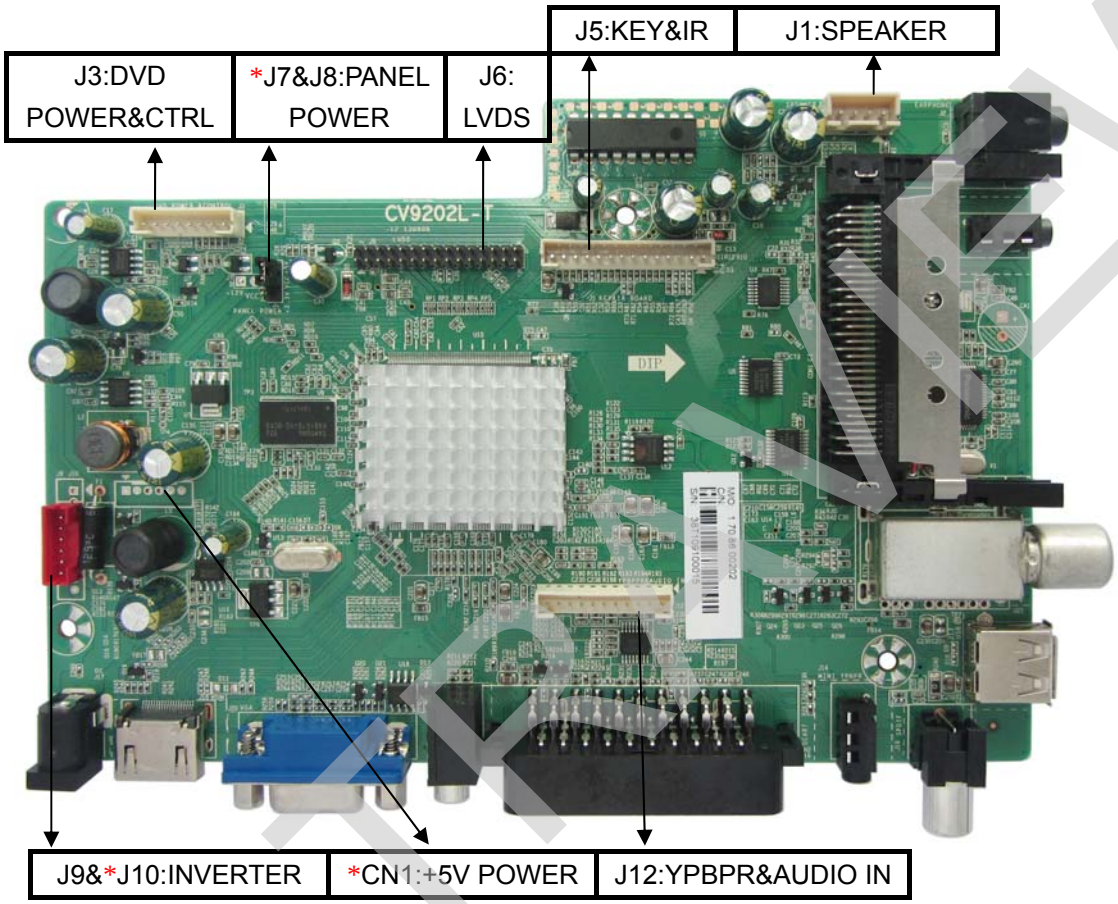

FRONT VIEW

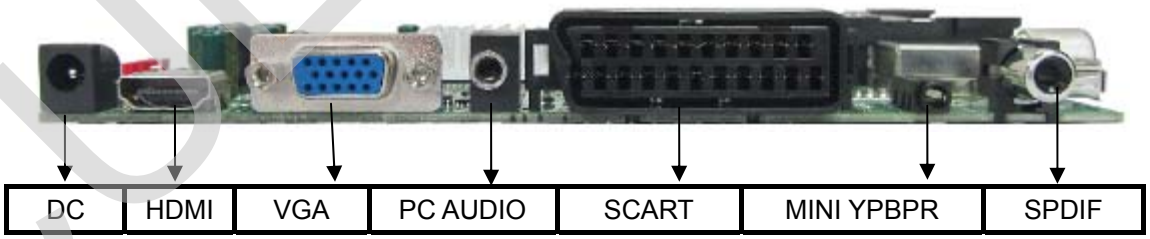

CULTRAVIEW

SIDE VIEW

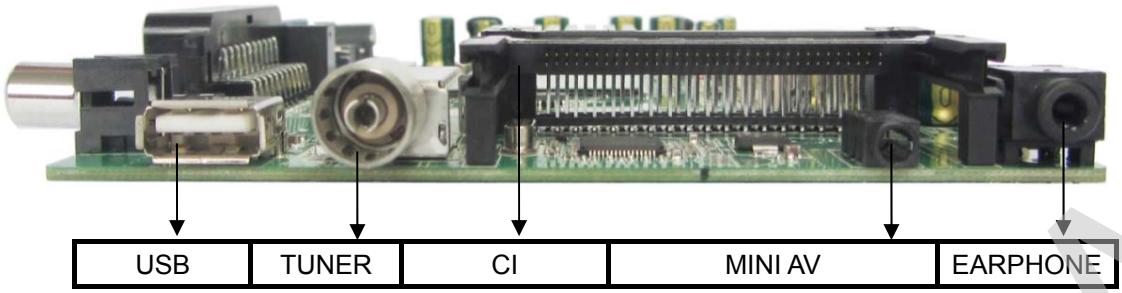

Board Type 2:

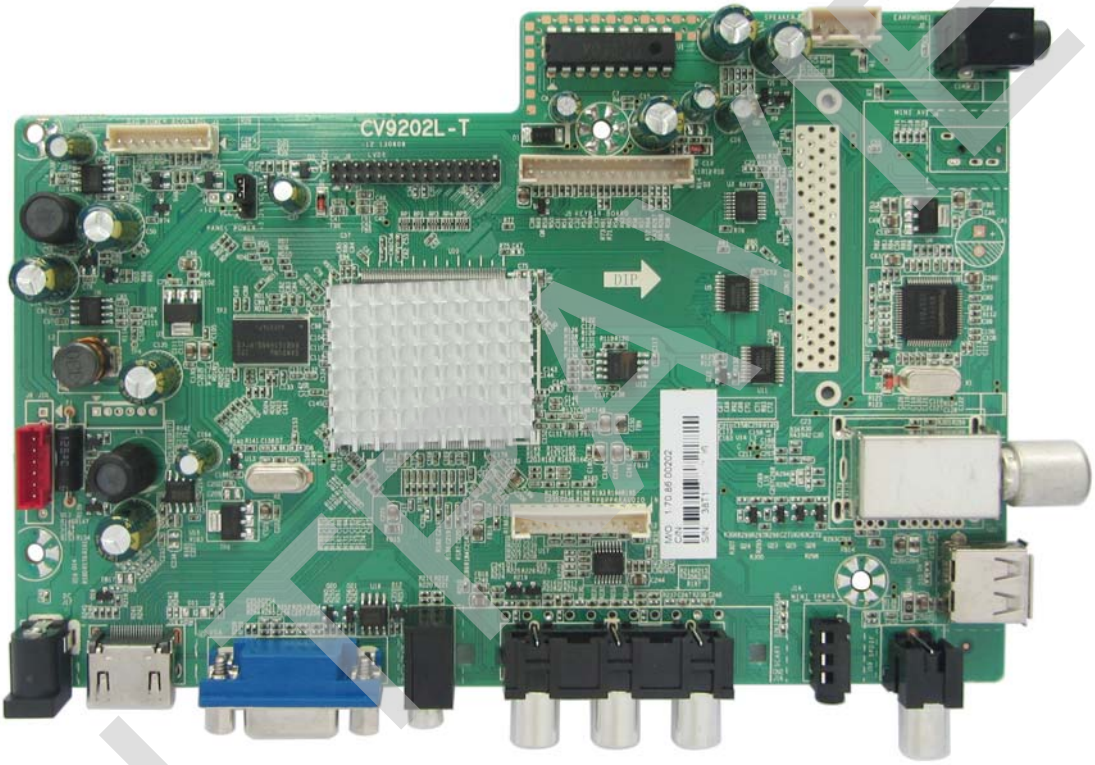

FRONT VIEW

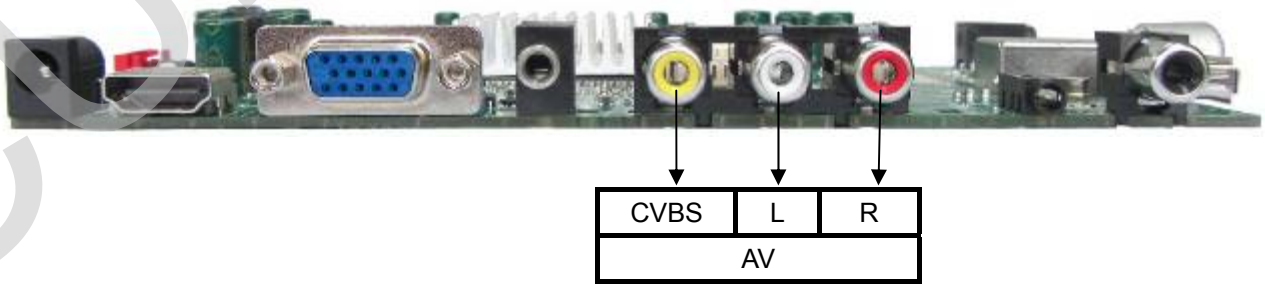

All rights reserve, if the specification has fluctuation and take real object as quasi

SIDE VIEW

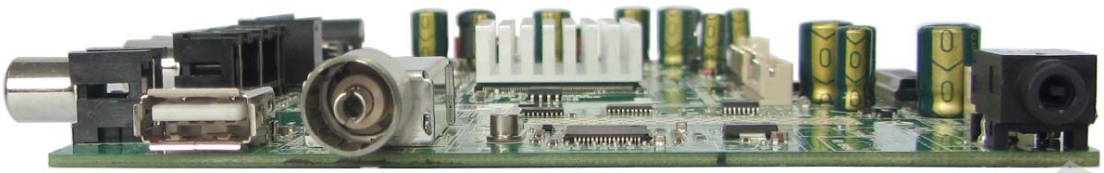

EXTERNAL CONNECTORS

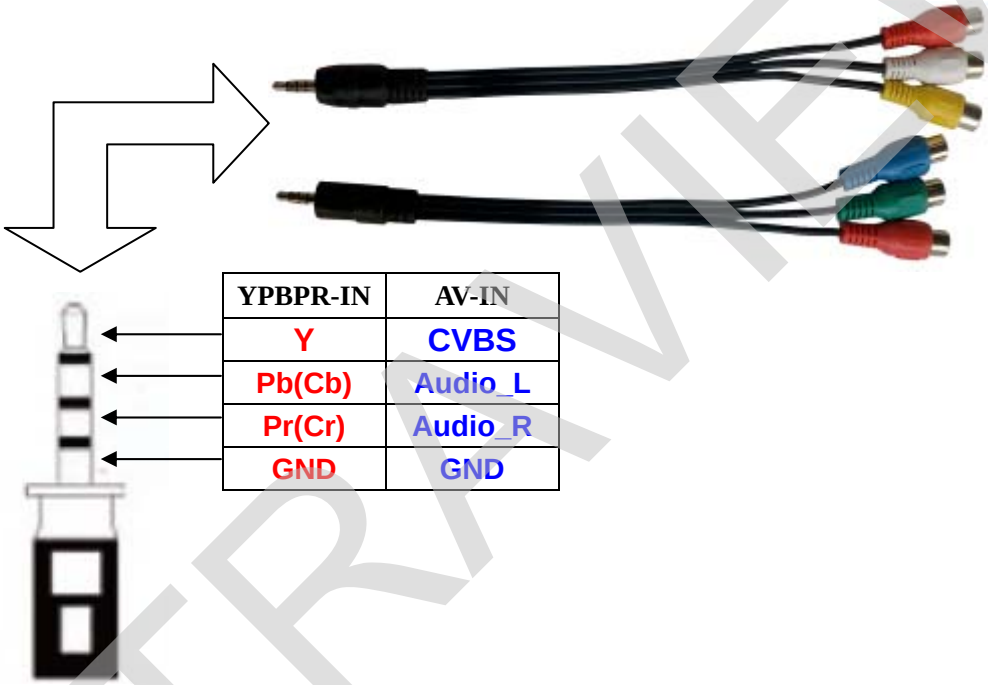

YPBPR-IN	AV-IN
Y	CVBS
Pb(Cb)	Audio_L
Pr(Cr)	Audio_R
GND	GND

CULTRAVIEW

8. INTERFACE DEFINITION

All jack recognize the square pad as first pin.

J1 SPEAKER CONNECTOR(4PIN/2.54)

NO.	SYMBOL	DESCRIPTION
1	ROUT	Audio R Channel Output
2	GND	Ground
3	GND	Ground
4	LOUT	Audio L Channel Output

J3 (8pin/2.0): DVD POWER&CONTROL

NO.	SYMBOL	DESCRIPTION
1	NC	NC
2	DVD_AUTO	DVD AUTO
3	DVD_IR	IR Data Transfer to DVD
4	+12V	+12V DC Power Supply for DVD
5	GND	Ground
6	GND	Ground
7	+5V	+5V DC Power Supply for DVD
8	+5V	+5V DC Power Supply for DVD

J5 KEY&IR BOARD CONNECTOR (14PIN/2.0)

NO.	SYMBOL	DESCRIPTION
1	GND	Ground
2	K7	Key7(Reserved)
3	POWER	POWER KEY
4	VOL+	VOL+ KEY
5	VOL-	VOL- KEY
6	INPUT	INPUT KEY
7	CH+	CH+ KEY
8	CH-	CH- KEY
9	MENU	MENU KEY
10	GND	Ground
11	IR	IR Receiver
12	LED_G	Green Indicator
13	LED_R	Red Indicator
14	+5V	+5V DC Power Supply

CULTRAVIEW

J6 LVDS INTERFACE (2×15PIN/2.0)

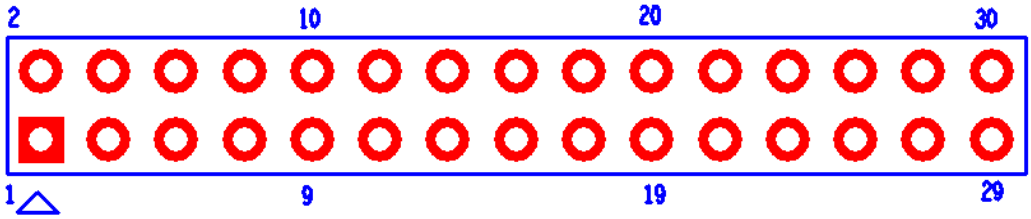

NO.	SYMBOL	DESCRIPTION
1	VCC	Power Supply for Panel
2	VCC	Power Supply for Panel
3	VCC	Power Supply for Panel
4	GND	Ground
5	GND	Ground
6	GND	Ground
7	RXO0-	LVDS ODD 0- Signal
8	RXO0+	LVDS ODD 0+ Signal
9	RXO1-	LVDS ODD 1- Signal
10	RXO1+	LVDS ODD 1+ Signal
11	RXO2-	LVDS ODD 2- Signal
12	RXO2+	LVDS ODD 2+ Signal
13	GND	Ground
14	GND	Ground
15	RXOC-	LVDS ODD Clock- Signal
16	RXOC+	LVDS ODD Clock + Signal
17	RXO3-	LVDS ODD 3- Signal
18	RXO3+	LVDS ODD 3+ Signal
19	RXE0-	LVDS EVEN 0- Signal
20	RXE0+	LVDS EVEN 0+ Signal
21	RXE1-	LVDS EVEN 1- Signal
22	RXE1+	LVDS EVEN 1+ Signal
23	RXE2-	LVDS EVEN 2- Signal
24	RXE2+	LVDS EVEN 2+ Signal
25	GND	Ground
26	GND	Ground
27	RXEC-	LVDS EVEN Clock- Signal
28	RXEC+	LVDS EVEN Clock + Signal
29	RXE3-	LVDS EVEN 3- Signal
30	RXE3+	LVDS EVEN 3+ Signal

CULTRAVIEW

* J7 PANEL POWER SUPPLY (1×2PIN/2.54/NC)

NO.	SYMBOL	DESCRIPTION
1	+12V	+12V Panel Power in
2	VCC_Panel	Panel Power in

J8 PANEL POWER SUPPLY (1×3PIN/2.54)

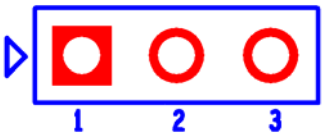

NO.	SYMBOL	DESCRIPTION
1	+3.3V	+3.3V Panel Power in
2	VCC_Panel	Panel Power in
3	+5V	5V Panel Power in

J9 INVERTER CONNECTOR (6PIN/2.0)

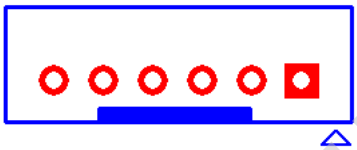

NO.	SYMBOL	DESCRIPTION
1	GND	Ground
2	GND	Ground
3	ADJ	Brightness Adjustment for Panel(Volts DC Output)
4	ON/OFF	Back-Light ON/OFF Control for Panel (1：ON/0: OFF)
5	+12V	INVERTER +12V DC Power Supply
6	+12V	INVERTER +12V DC Power Supply

* J10 INVERTER CONNECTOR (10PIN/2.0/NC)

NO.	SYMBOL	DESCRIPTION
1	GND	Ground
2	GND	Ground
3	GND	Ground
4	GND	Ground
5	ADJ	Brightness Adjustment for Panel(Volts DC Output)
6	ON/OFF	Back-Light ON/OFF Control for Panel (1：ON/0: OFF)
7	+12V	INVERTER +12V DC Power Supply
8	+12V	INVERTER +12V DC Power Supply
9	+12V	INVERTER +12V DC Power Supply

CULTRAVIEW

10	+12V	INVERTER +12V DC Power Supply

J12 DVD VIDEO&AUDIO INPUT CONNECTOR (11PIN/2.0)

NO.	SYMBOL	DESCRIPTION
1	GND	Ground
2	Y	YPbPr-Y Input
3	GND	Ground
4	Pr	YPbPr-Pr Input
5	GND	Ground
6	Pb	YPbPr-Pb Input
7	LIN	Left Channel Input
8	GND	Ground
9	RIN	Right Channel Input
10	GND	Ground
11	SPDIF	SPDIF Input

*** CN1 5V POWER CONNECTOR (6PIN/2.0)**

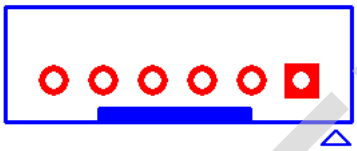

NO.	SYMBOL	DESCRIPTION
1	NC	NC
2	+5V	+5V DC Power Supply
3	GND	Ground
4	GND	Ground
5	+5V	+5V DC Power Supply
6	+5V	+5V DC Power Supply

CULTRAVIEW

9. CONFIGURATION

Board Type 1:

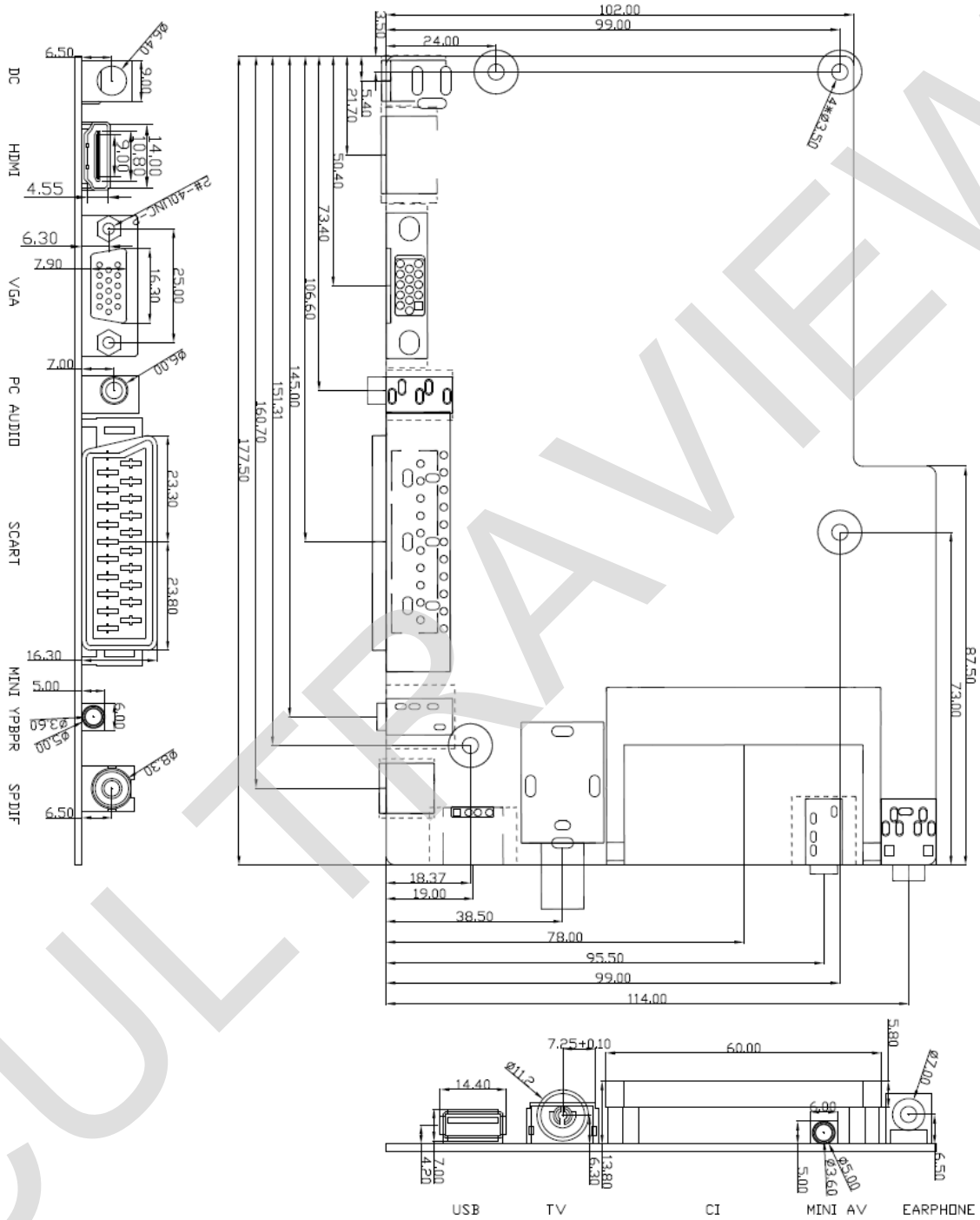

The PCB board is thick :1.6mm
Component the tallest altitude:16.5mm
Install diameter inside the bore 3.5mm

CULTRAVIEW

Board Type 2:

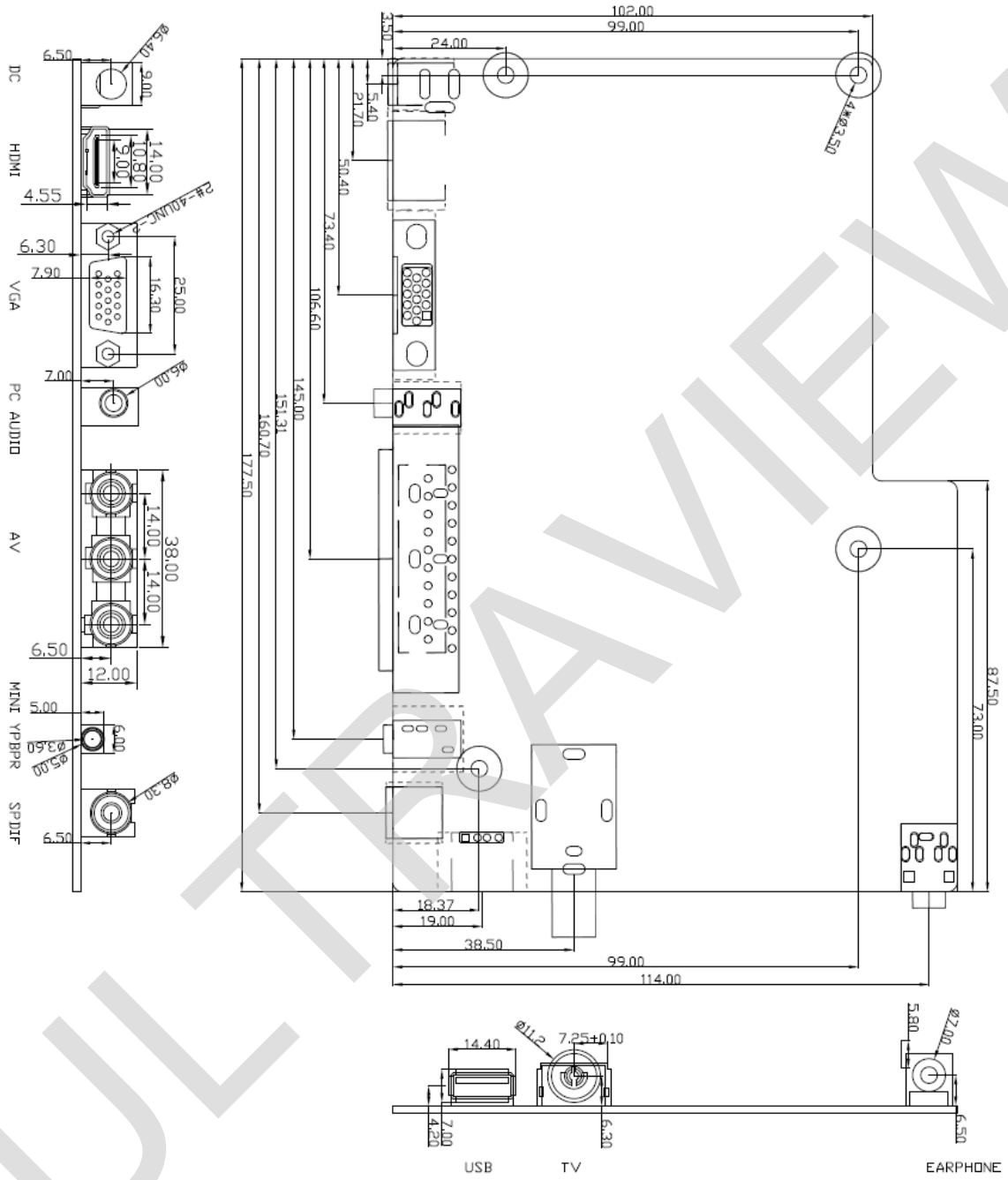

The PCB board is thick :1.6mm
Component the tallest altitude:13.5mm
Install diameter inside the bore 3.5mm

CULTRAVIEW

10. APPLICATION REQUIREMENT

- Relative humidity ≤80%
- Store temperature -10~+60 ℃
- Use temperature 0~+40 ℃
- The procedure of the whole machine assembles and transports need to attend ESD transaction.
- When the whole set assemble, it can down pack or side pack, but don't make the board transform or distort, don't be subjected to heavy pressure.
- The hole of each port does not be opened too small, especially the HDMI port hole, avoid the whole set morphing to cause the extrusion of port when installing.
- The hole of RGB socket is recommended the situation of not using the screw stationary on the RGB socket to fix on the structure board.
- The connected wire which between the other boards and this board can't be leaded too long, or affect performance and image quality.
- The whole set inner wires matching reasonable, each connected wire try to not directly cross the PCB board, especially cross over from the main IC, avoid affect the whole set EMC performance.
- n order to obtain better EMC effect of the whole set, we suggest the LVDS twisted pair wire between the main board and panel must be tied up well and try to use shielding wire. If it’s possible, try to put on the magnetic belt ring on the wire which near the board terminal.
- The HDMI and HDCP on the main board are all passed the related certifications, but we just provide testing certification of the inner usage standard. If you need to use legal HDMI and HDCP, please apply related association as formal member by yourself.
- There is ROHS identification on the board and package, the board match ROHS standard.

CULTRAVIEW

11. EXCURSUS

Keyboard and remote definition

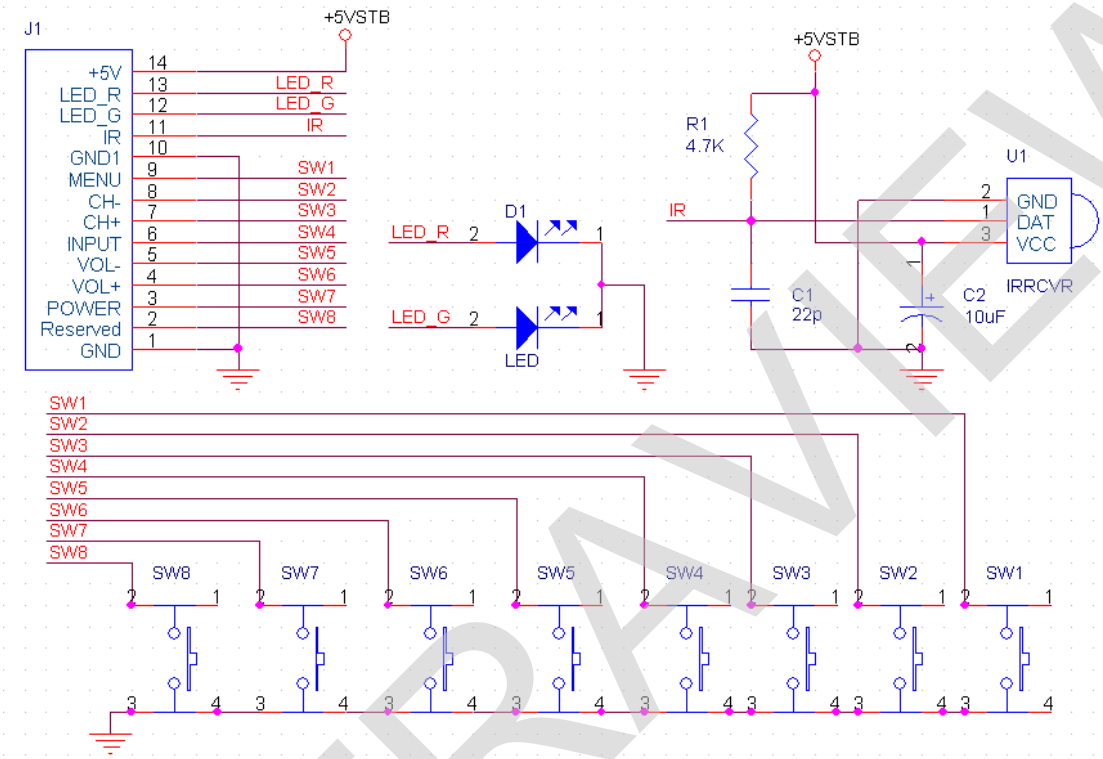

NOTE: POWER KEY Position Can't be changed,Please don't move it !

CULTRAVIEW

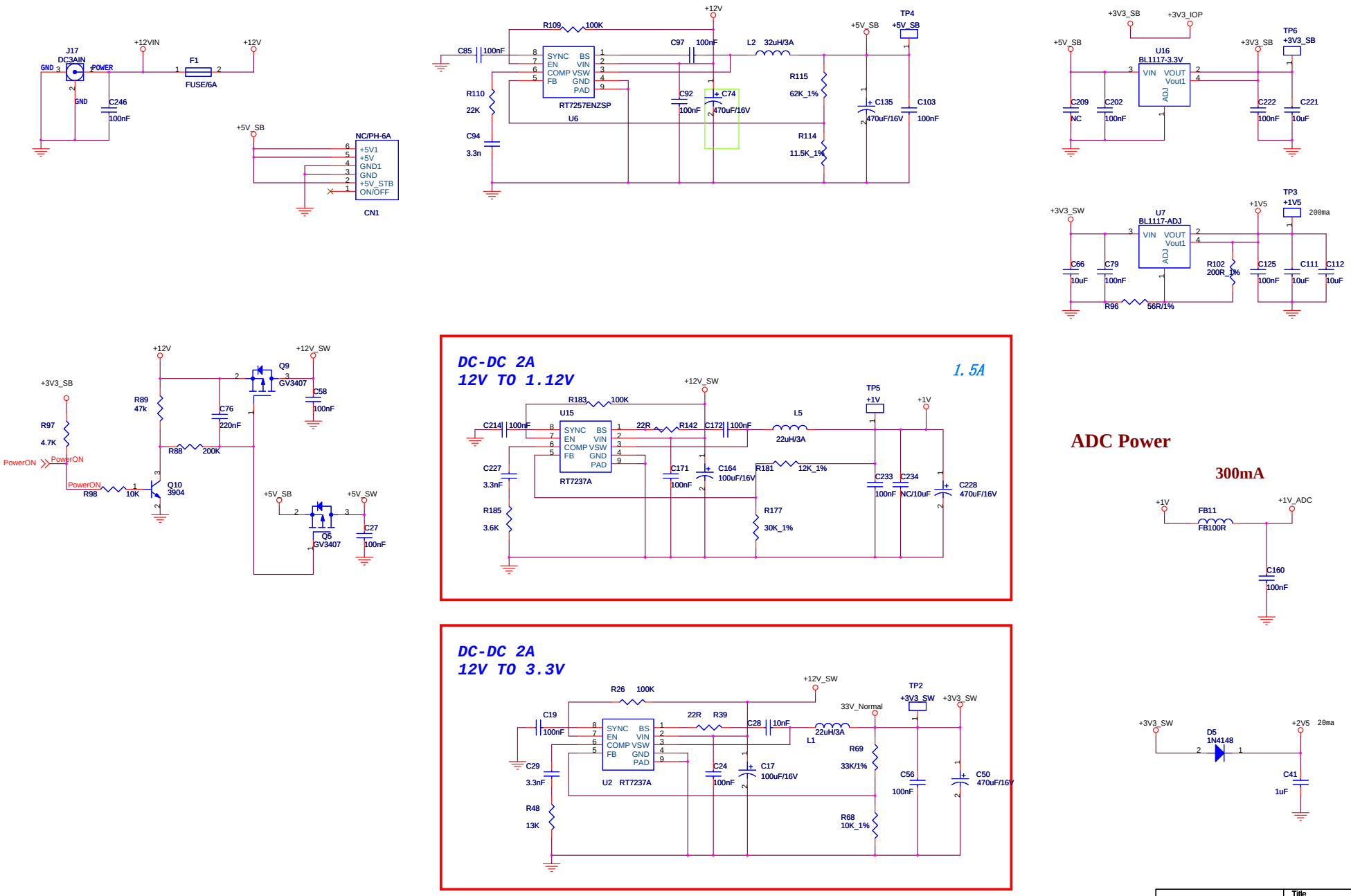

锐显数码 CULTRAVIEW	Title: CV9202L-T
Size: Custom	Document Number: POWER
Rev: 12	
Date: Friday, August 23, 2013	Sheet 1 of 12

PC Analog Input

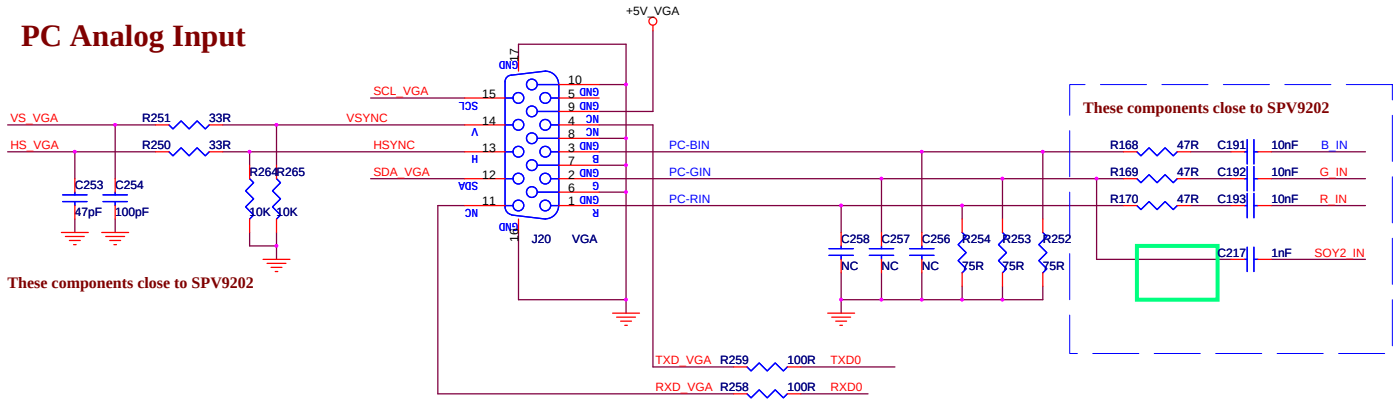

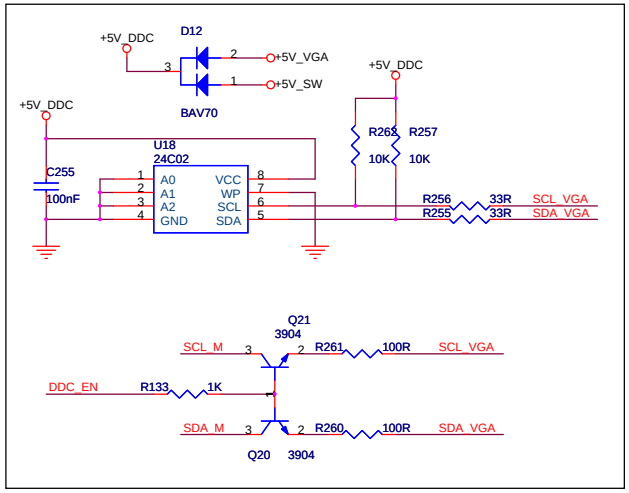

SCART Input

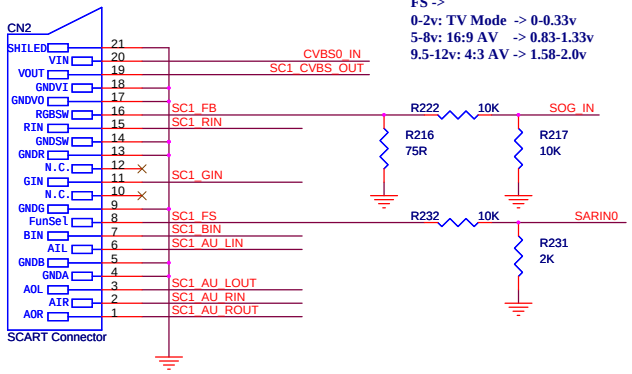

FS ->
0-2v: TV Mode -> 0-0.33v
5-8v: 16:9 AV -> 0.83-1.33v
9.5-12v: 4:3 AV -> 1.58-2.0v

SCART_CVBS_OUT

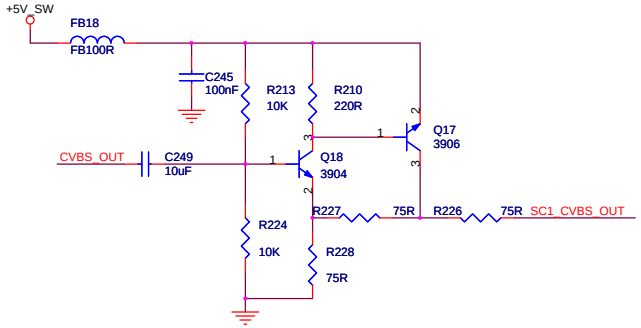

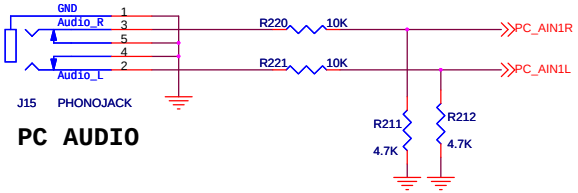

PC AUDIO

These components close to SPV9202

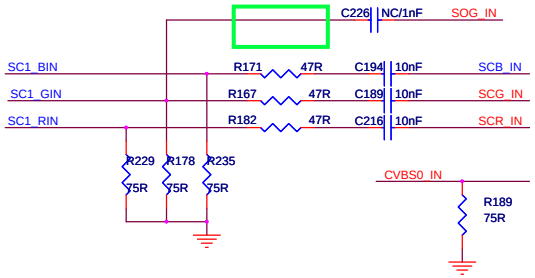

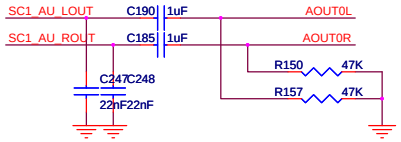

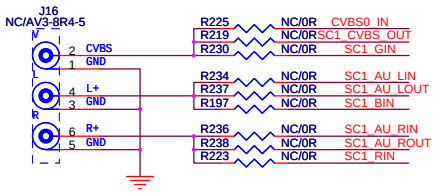

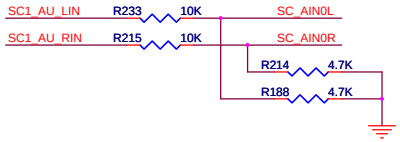

DDC_EN	DDC_EN	7,9,11
SCL_M	SCL_M	7,9,11
SDA_M	SDA_M	7,9,11
CVBS_OUT	CVBS_OUT	11
SC_AIN0R	SC_AIN0R	8
SC_AIN0L	SC_AIN0L	8
AOUT0L	AOUT0L	11
AOUT0R	AOUT0R	11
SARIN0	SARIN0	11
SOG_IN	SOG_IN	11
B_IN	B_IN	11
G_IN	G_IN	11
R_IN	R_IN	11
VS_VGA	VS_VGA	11
HS_VGA	HS_VGA	11
TXD0	TXD0	7,9,11
RXD0	RXD0	7,9,11
Trap2	Trap2	11
SOY2_IN	SOY2_IN	7,9,11
SCB_IN	SCB_IN	7,9,11
SCG_IN	SCG_IN	11
SCR_IN	SCR_IN	11
CVBS0_IN	CVBS0_IN	7,9,11

锐显数码 CULTRAVIEW

Title: CV9202L-T

Size: A3 | Document Number: PC/SCART | Rev: 12

Date: Friday, August 23, 2013 | Sheet 2 of 12

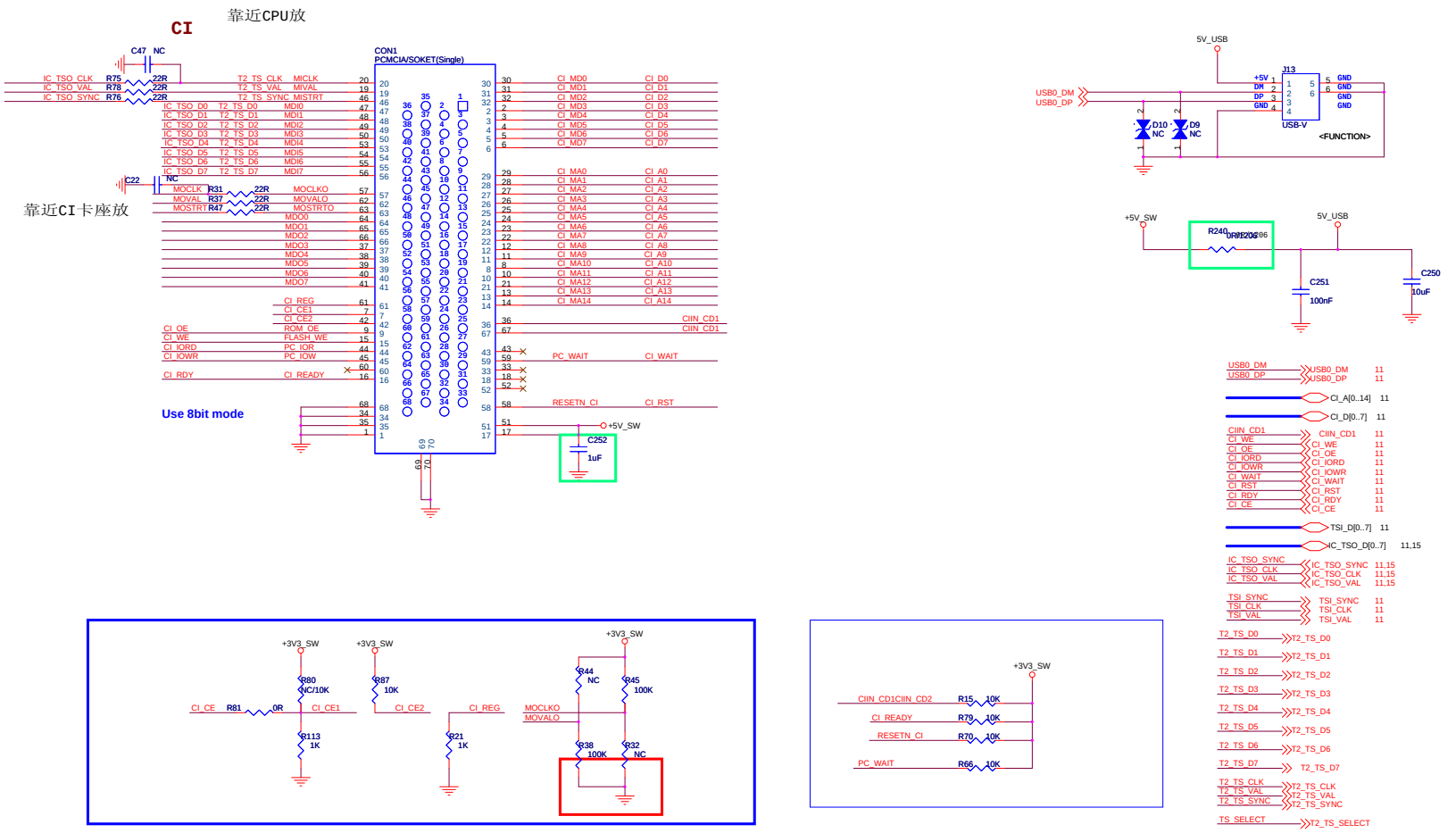

锐显数码 CULTRAVIEW	Title: CV9202L-T
Size: C	Document Number: CI/USB
Rev: 12	
Date: Friday, August 23, 2013	Sheet 3 of 12

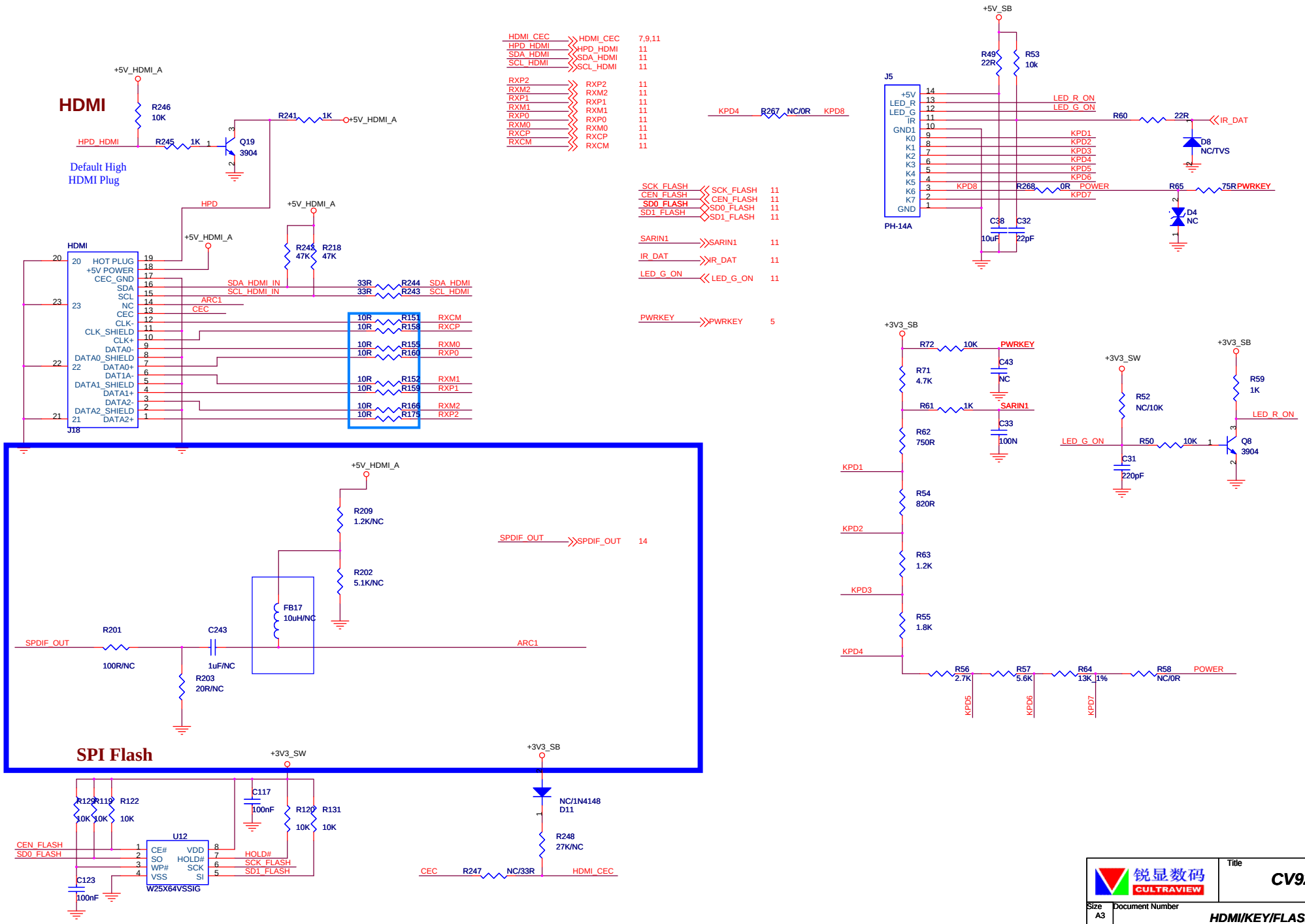
HDMI
+5V_HDMI_A
R246 10K
HPD_HDMI
R245 1K
Q19 3904
R241 1K
Default High
HDMI Plug
HPD
R242 47K
R218 47K
HDMI
J18
HOT PLUG
+5V POWER
CEC_GND
SDA
SCL
NC
CEC
CLK-
CLK_SHIELD
CLK+
DATA0-
DATA0_SHIELD
DATA0+
DAT1A-
DATA1_SHIELD
DATA1+
DATA2-
DATA2_SHIELD
DATA2+
SDA_HDMI_IN
SCL_HDMI_IN
ARC1
CEC
R244 SDA_HDMI
R243 SCL_HDMI
R151 RXCM
R158 RXCP
R155 RXM0
R160 RXP0
R152 RXM1
R159 RXP1
R166 RXM2
R175 RXP2
HDMI_CEC 7,9,11
HPD_HDMI 11
SDA_HDMI 11
SCL_HDMI 11
RXP2 11
RXM2 11
RXP1 11
RXM1 11
RXP0 11
RXM0 11
RXCP 11
RXCM 11
KPD4 R267 NC/0R KPD8
SCK_FLASH 11
CEN_FLASH 11
SD0_FLASH 11
SD1_FLASH 11
SARIN1 11
IR_DAT 11
LED_G_ON 11
PWRKEY 5
+5V_SB
R49 22R
R53 10k
J5
PH-14A
LED_R_ON
LED_G_ON
R60 22R
IR_DAT
D8 NC/TVS
KPD1
KPD2
KPD3
KPD4
KPD5
KPD6
KPD7
KPD8
R268 0R POWER
R65 75R PWRKEY
D4 NC
C38 10uF
C32 22pF
+3V3_SB
R72 10K PWRKEY
C43 NC
R71 4.7K
R61 1K SARIN1
C33 100N
R62 750R
R54 820R
R63 1.2K
R55 1.8K
R56 2.7K
R57 5.6K
R64 13K 1%
R58 NC/0R POWER
+3V3_SW
R52 NC/10K
LED_G_ON
R50 10K
C31 220pF
R59 1K
LED_R_ON
Q8 3904
+5V_HDMI_A
R209 1.2K/NC
R202 5.1K/NC
SPDIF_OUT
SPDIF_OUT 14
FB17 10uH/NC
R201 100R/NC
C243 1uF/NC
R203 20R/NC
ARC1
SPI Flash
+3V3_SW
R123 10K
R119 10K
R122 10K
C117 100nF
R120 10K
R131 10K
U12
CE#
SO
WP#
VSS
VDD
HOLD#
SCK
SI
W25X64VSSIG
CEN_FLASH
SD0_FLASH
HOLD#
SCK_FLASH
SD1_FLASH
C123 100nF
+3V3_SB
NC/1N4148 D11
R248 27K/NC
CEC
R247 NC/33R
HDMI_CEC
锐显数码
CULTRAVIEW
Title
CV9202L-T
Size A3
Document Number
HDMI/KEY/FLASH
Rev 12
Date: Friday, August 23, 2013
Sheet 4 of 12

AV Input

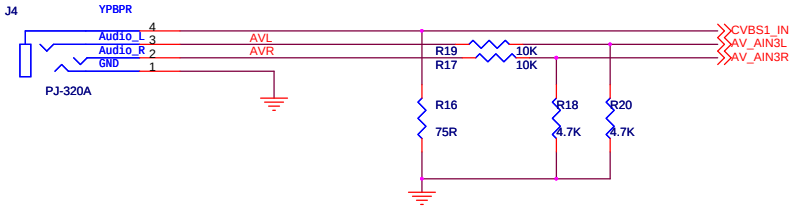

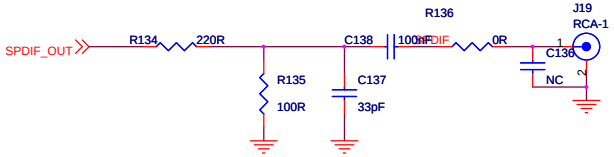

YPBPR

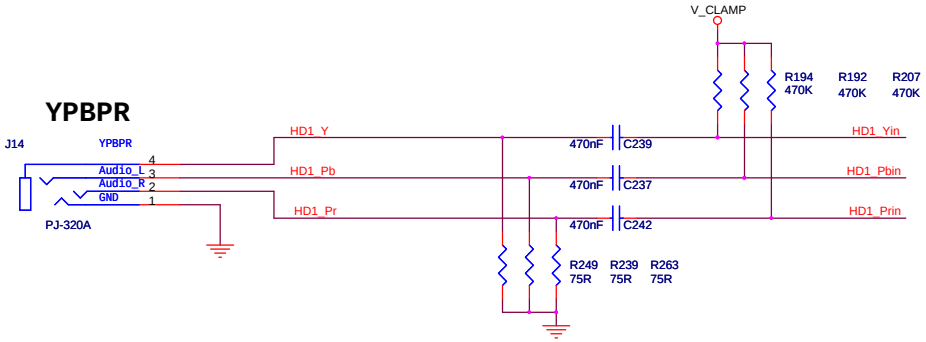

YUV Input

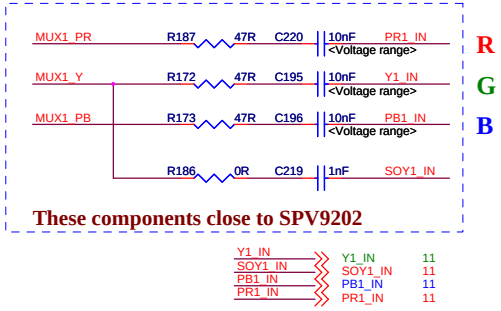

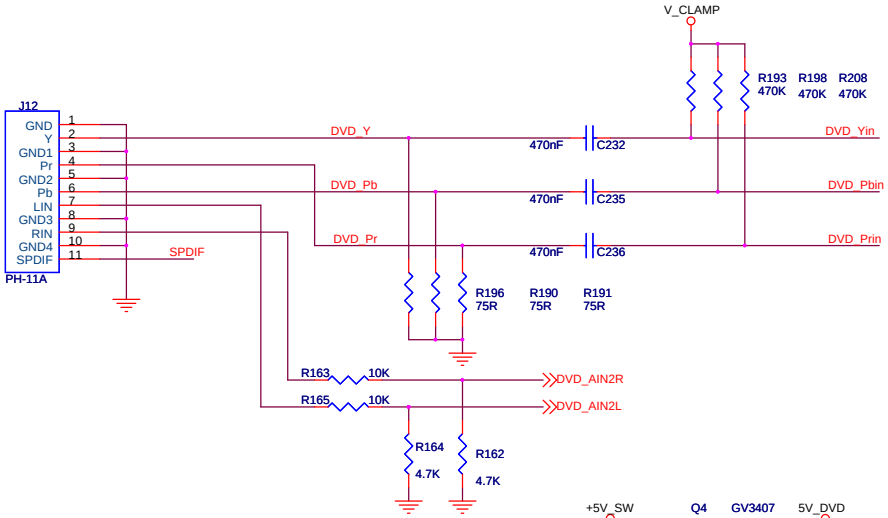

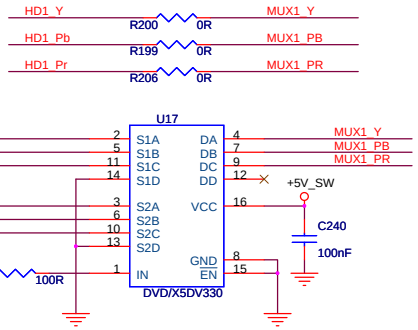

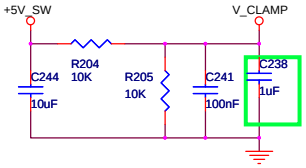

0	YPBPR
1	DVD

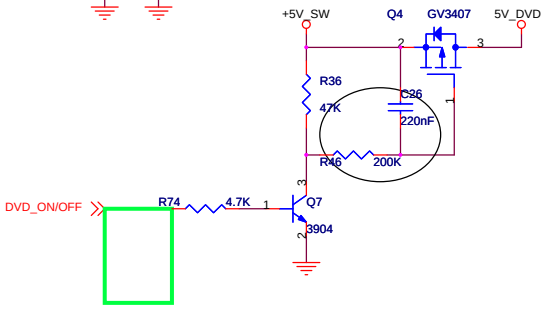

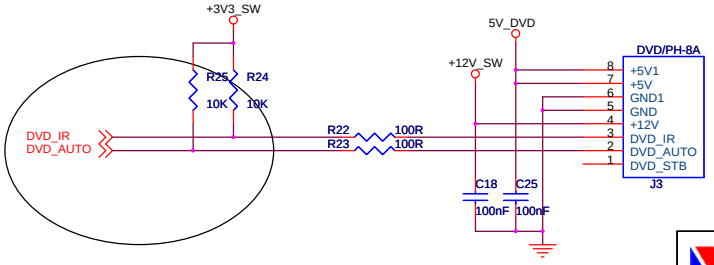

锐显数码 CULTRAVIEW	Title	CV9202L-T	
Size A3	Document Number	AV/YPBPR/DVD/SPDIF	Rev 12
Date: Friday, August 23, 2013	Sheet 5 of 12		

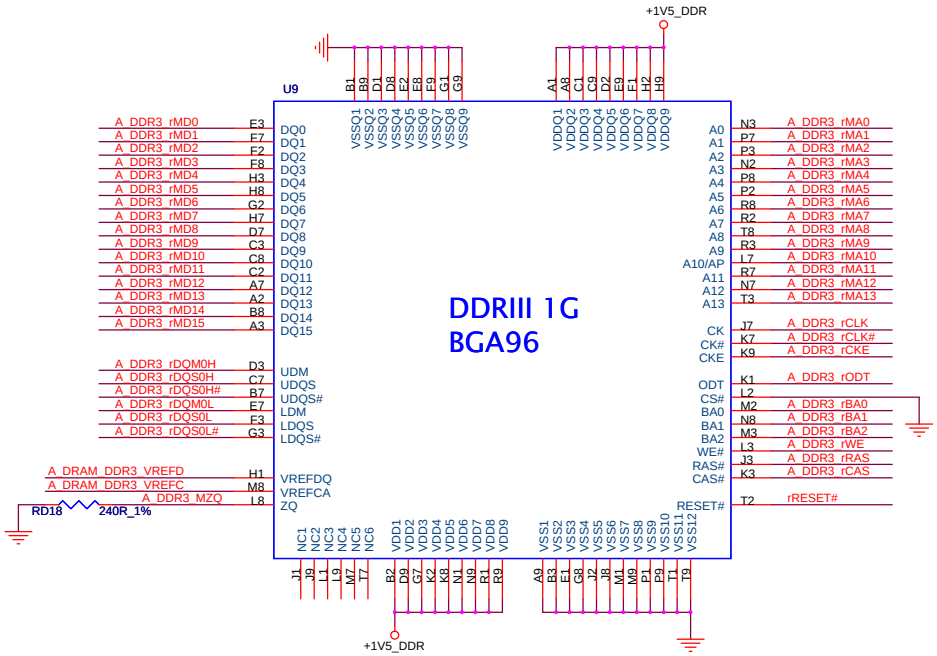

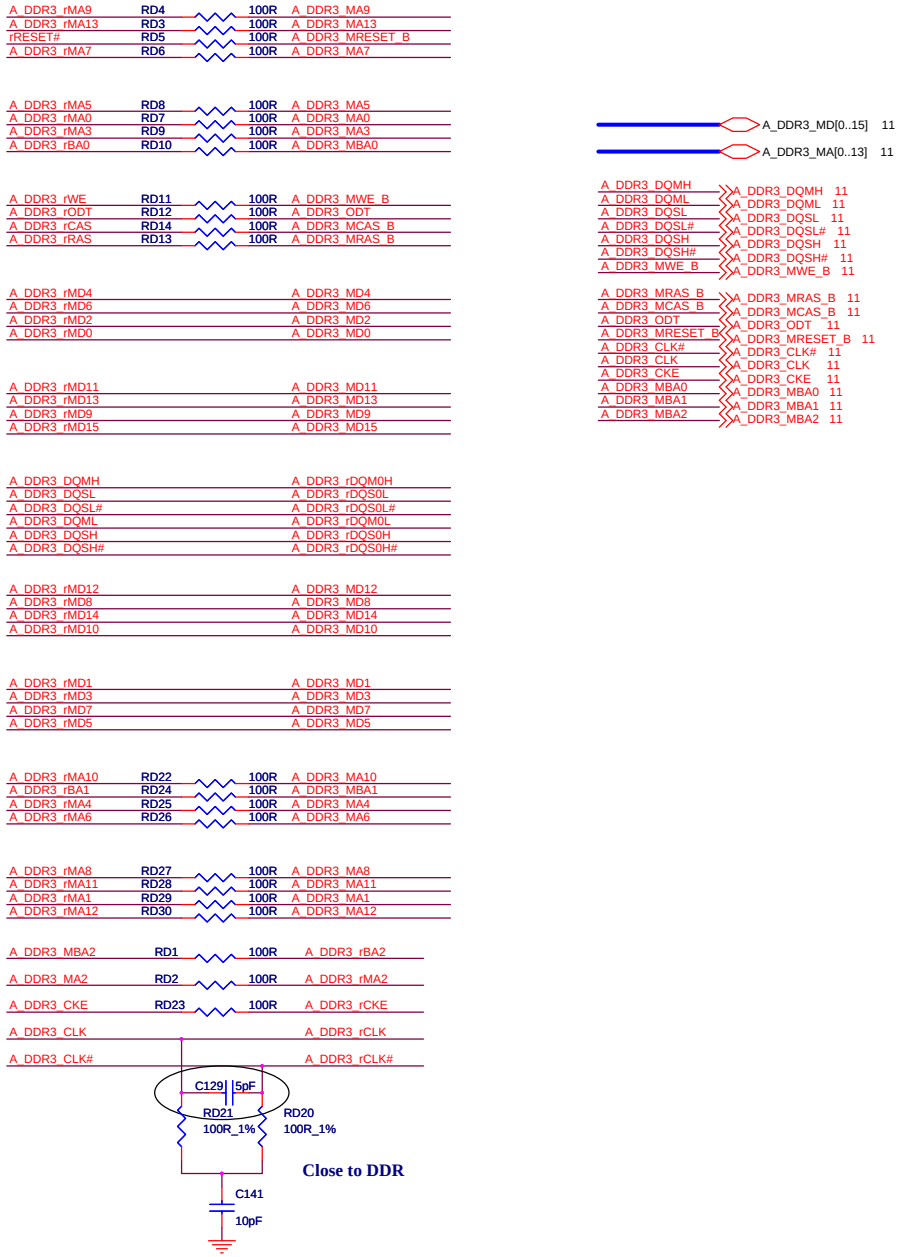

SOURCE POWER/GND (1.5V)

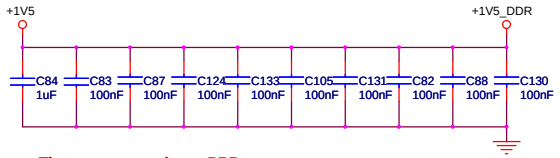

These components close to DDR

Power bypass cap. for VREF

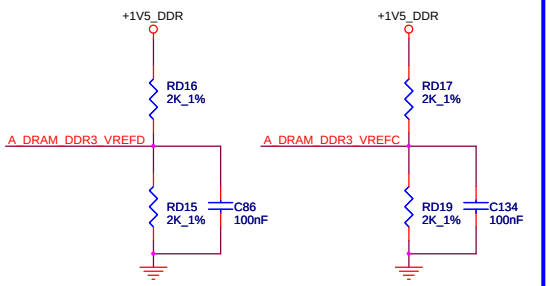

锐显数码 CULTRAVIEW	Title	CV9202L-T	
Size A3	Document Number	DDR	Rev 12
Date: Friday, August 23, 2013	Sheet 6 of 12		

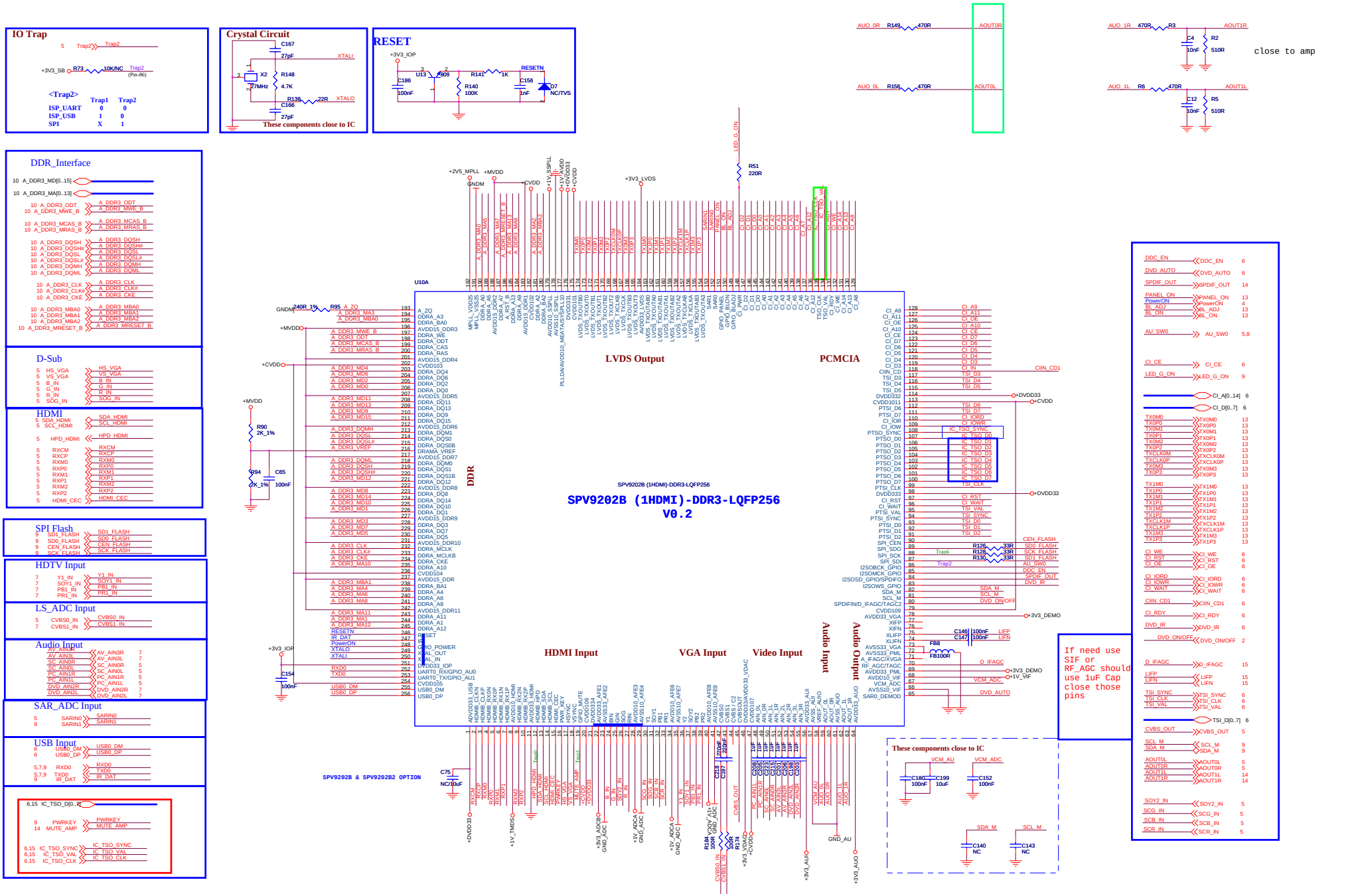
IO Trap
Crystal Circuit
RESET
DDR_Interface
D-Sub
HDMI
SPI Flash
HDTV Input
LS_ADC Input
Audio Input
SAR_ADC Input
USB Input
close to amp
LVDS Output
PCMCIA
DDR
HDMI Input
VGA Input
Video Input
Audio Input
Audio Output
SPV9202B (1HDMI)-DDR3-LQFP256
SPV9202B (1HDMI)-DDR3-LQFP256
V0.2
SPV9202B & SPV9202B2 OPTION
These components close to IC
If need use SIF or RF_AGC should use 1uF Cap close those pins
CV9202L-T
SPV9202B
Friday, August 23, 2013

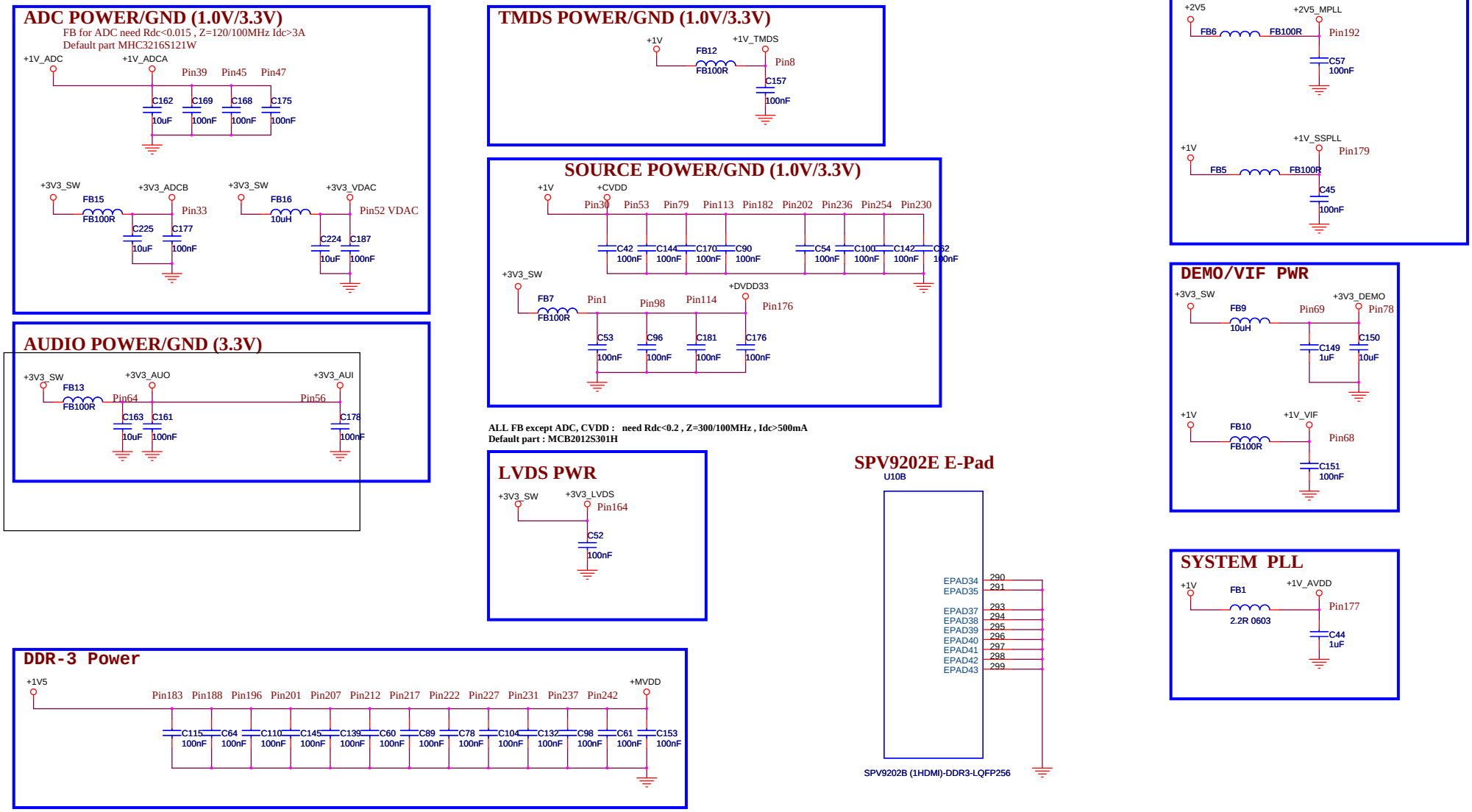
ADC POWER/GND (1.0V/3.3V)
FB for ADC need Rdc<0.015 , Z=120/100MHz Idc>3A
Default part MHC3216S121W
+1V_ADC
+1V_ADCA
Pin39 Pin45 Pin47
C162 10uF
C169 100nF
C168 100nF
C175 100nF
+3V3_SW
FB15 FB100R
+3V3_ADCB
Pin33
C225 10uF
C177 100nF
+3V3_SW
FB16 10uH
+3V3_VDAC
Pin52 VDAC
C224 10uF
C187 100nF
AUDIO POWER/GND (3.3V)
+3V3_SW
FB13 FB100R
+3V3_AUO
Pin64
C163 10uF
C161 100nF
+3V3_AUI
Pin56
C178 100nF
TMDS POWER/GND (1.0V/3.3V)
+1V
FB12 FB100R
+1V_TMDS
Pin8
C157 100nF
SOURCE POWER/GND (1.0V/3.3V)
+1V
+CVDD
Pin30 Pin53 Pin79 Pin113 Pin182 Pin202 Pin236 Pin254 Pin230
C42 100nF
C144 100nF
C170 100nF
C90 100nF
C54 100nF
C100 100nF
C142 100nF
C62 100nF
+3V3_SW
FB7 FB100R
Pin1 Pin98 Pin114
+DVDD33
Pin176
C53 100nF
C96 100nF
C181 100nF
C176 100nF
ALL FB except ADC, CVDD : need Rdc<0.2 , Z=300/100MHz , Idc>500mA
Default part : MCB2012S301H
LVDS PWR
+3V3_SW
+3V3_LVDS
Pin164
C52 100nF
SPV9202E E-Pad
U10B
EPAD34 290
EPAD35 291
EPAD37 293
EPAD38 294
EPAD39 295
EPAD40 296
EPAD41 297
EPAD42 298
EPAD43 299
SPV9202B (1HDMI)-DDR3-LQFP256
PLL POWER/GND (1.0V/2.5V)
+2V5
FB6 FB100R
+2V5_MPLL
Pin192
C57 100nF
+1V
FB5 FB100R
+1V_SSPLL
Pin179
C45 100nF
DEMO/VIF PWR
+3V3_SW
FB9 10uH
Pin69
+3V3_DEMO
Pin78
C149 1uF
C150 10uF
+1V
FB10 FB100R
+1V_VIF
Pin68
C151 100nF
SYSTEM PLL
+1V
FB1 2.2R 0603
+1V_AVDD
Pin177
C44 1uF
DDR-3 Power
+1V5
Pin183 Pin188 Pin196 Pin201 Pin207 Pin212 Pin217 Pin222 Pin227 Pin231 Pin237 Pin242
+MVDD
C115 100nF
C64 100nF
C110 100nF
C145 100nF
C139 100nF
C60 100nF
C89 100nF
C78 100nF
C104 100nF
C132 100nF
C98 100nF
C61 100nF
C153 100nF
*Short these ground planes on PCB
GND_IOP GND_DEMO GND_TMDS GND_ADC GND_AU GNDM GNDP GND_XTAL GNDV GND_AMP GND_TU GND_TA GND_TD
锐显数码
CULTRAVIEW
Title
CV9202L-T
Size A3
Document Number
SPV9202B POWER
Rev 12
Date: Friday, August 23, 2013
Sheet 8 of 12

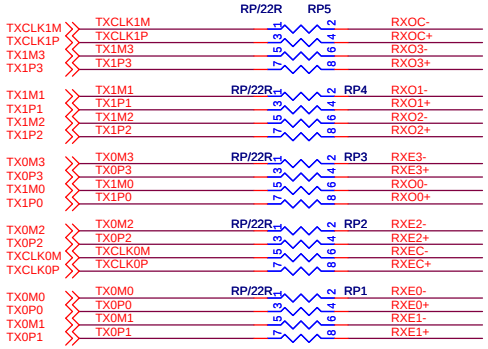

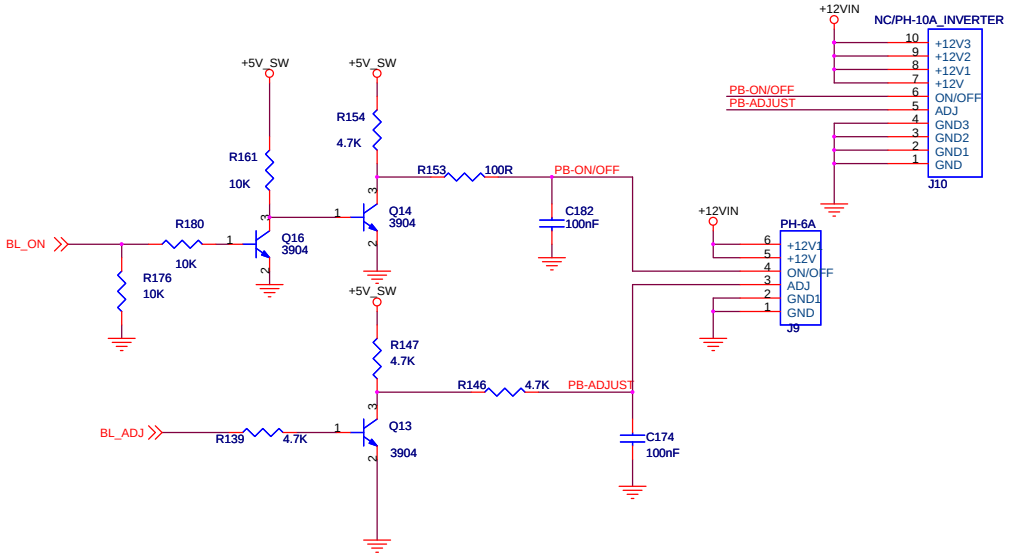

LVDS CONNECTOR

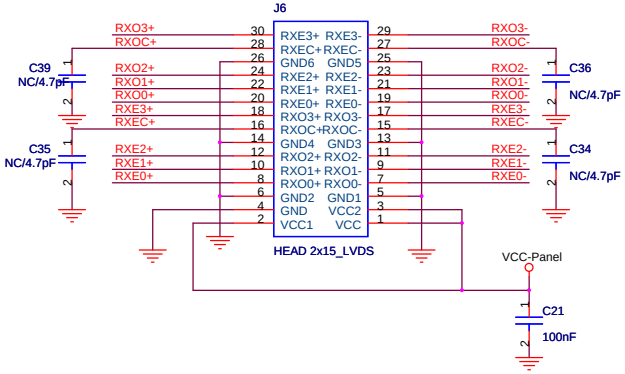

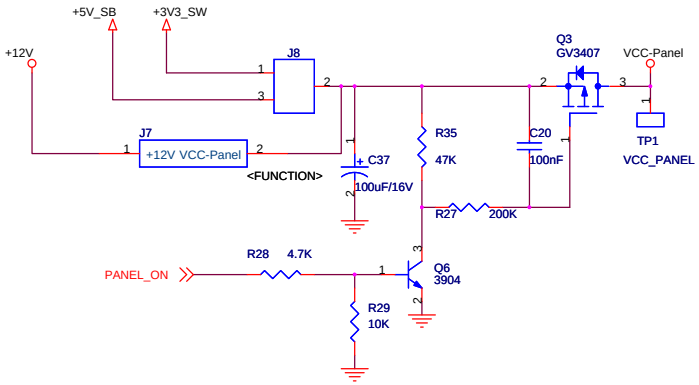

锐显数码 CULTRAVIEW	Title	CV9202L-T
Size A3	Document Number	PANEL	Rev 12
Date: Friday, August 23, 2013	Sheet 9 of 12	

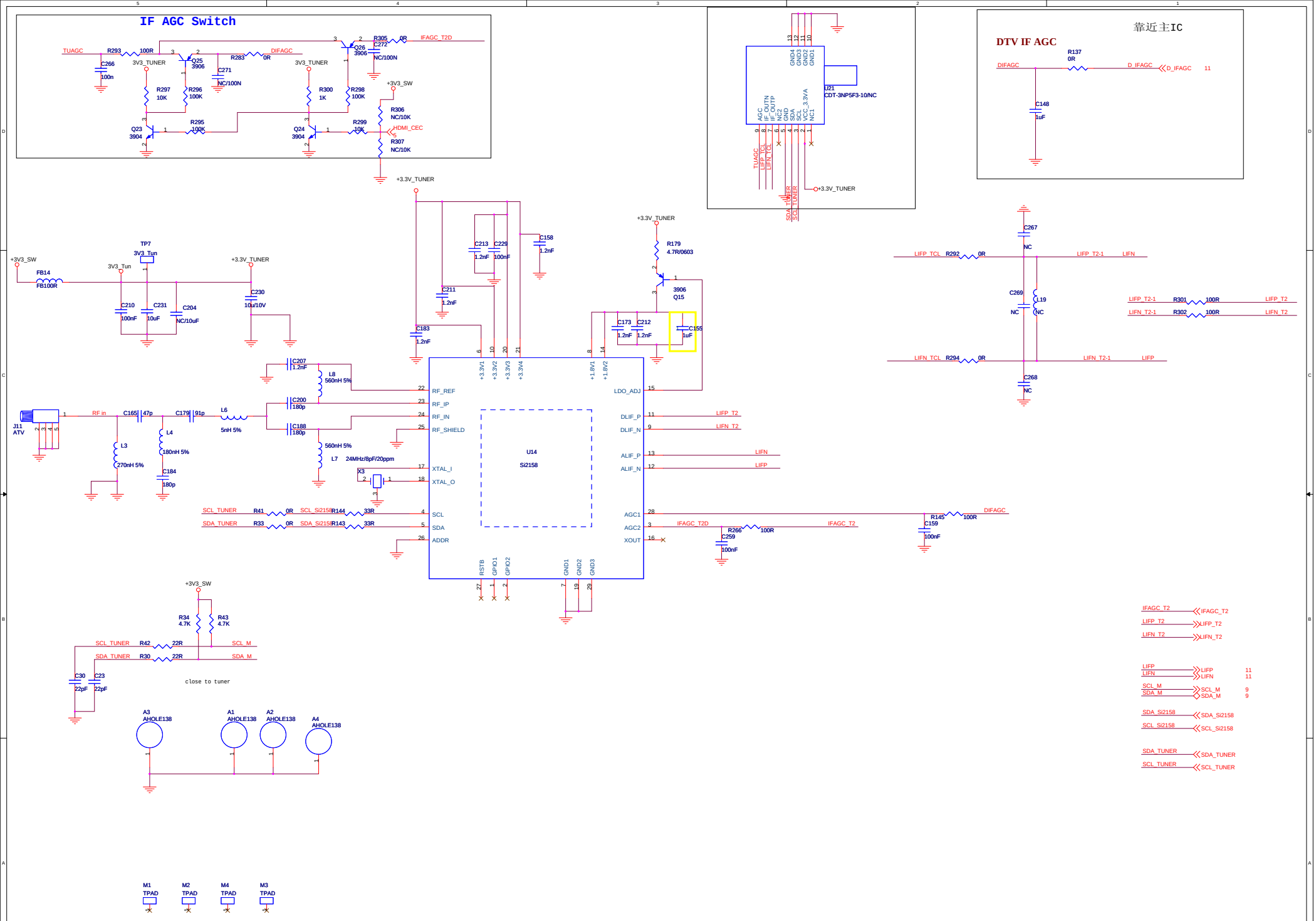

锐显数码 CULTRAVIEW	Title	CV9202L-T	
Size C	Document Number	Tuner	Rev 12
Date: Friday, August 23, 2013	Sheet 10 of 12		

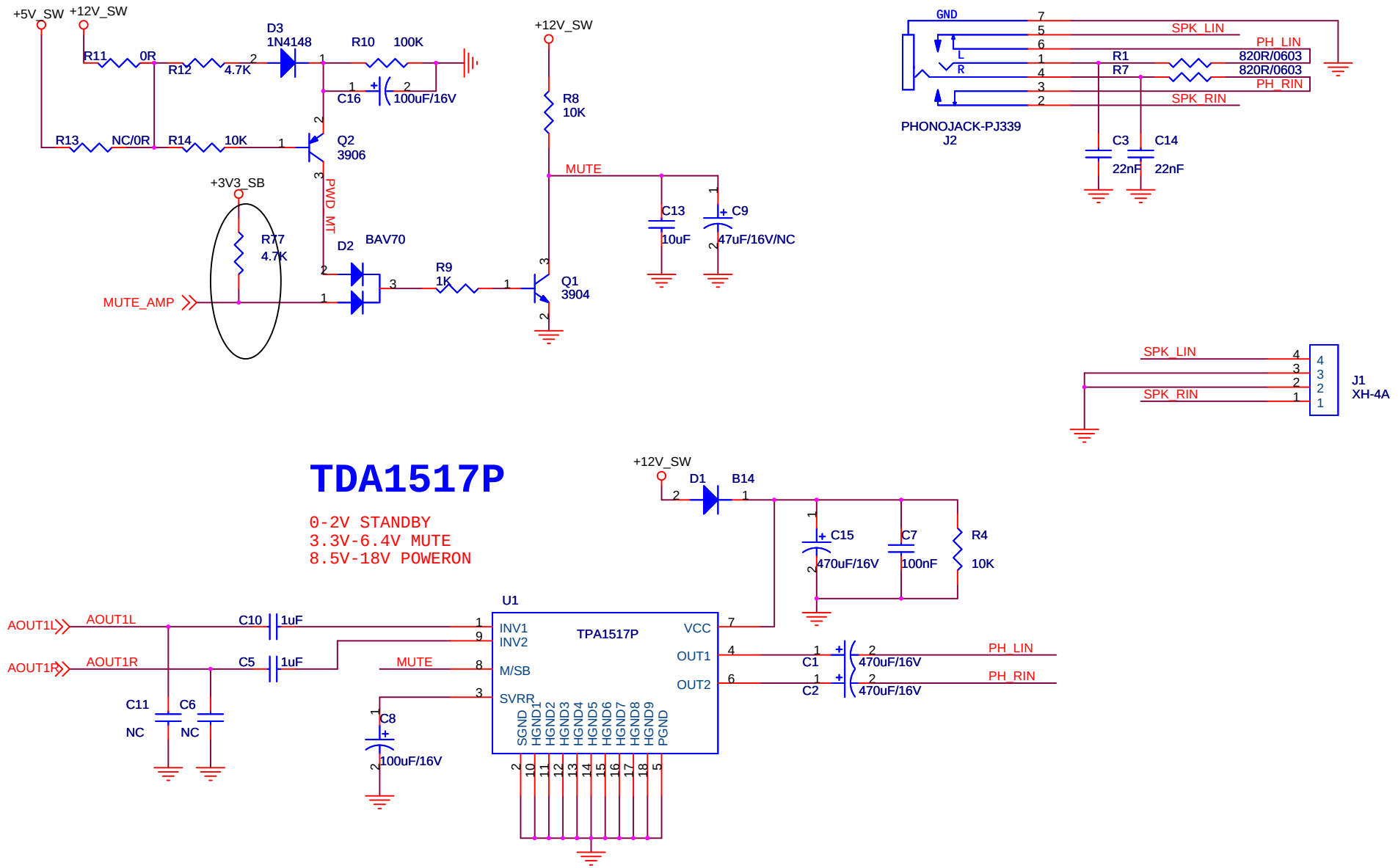

锐显数码 CULTRAVIEW

Title **CV9202L-T**

Size	Document Number	Rev
A4	TPA1517	12

Date: Friday, August 23, 2013 Sheet 11 of 12

Demodulator

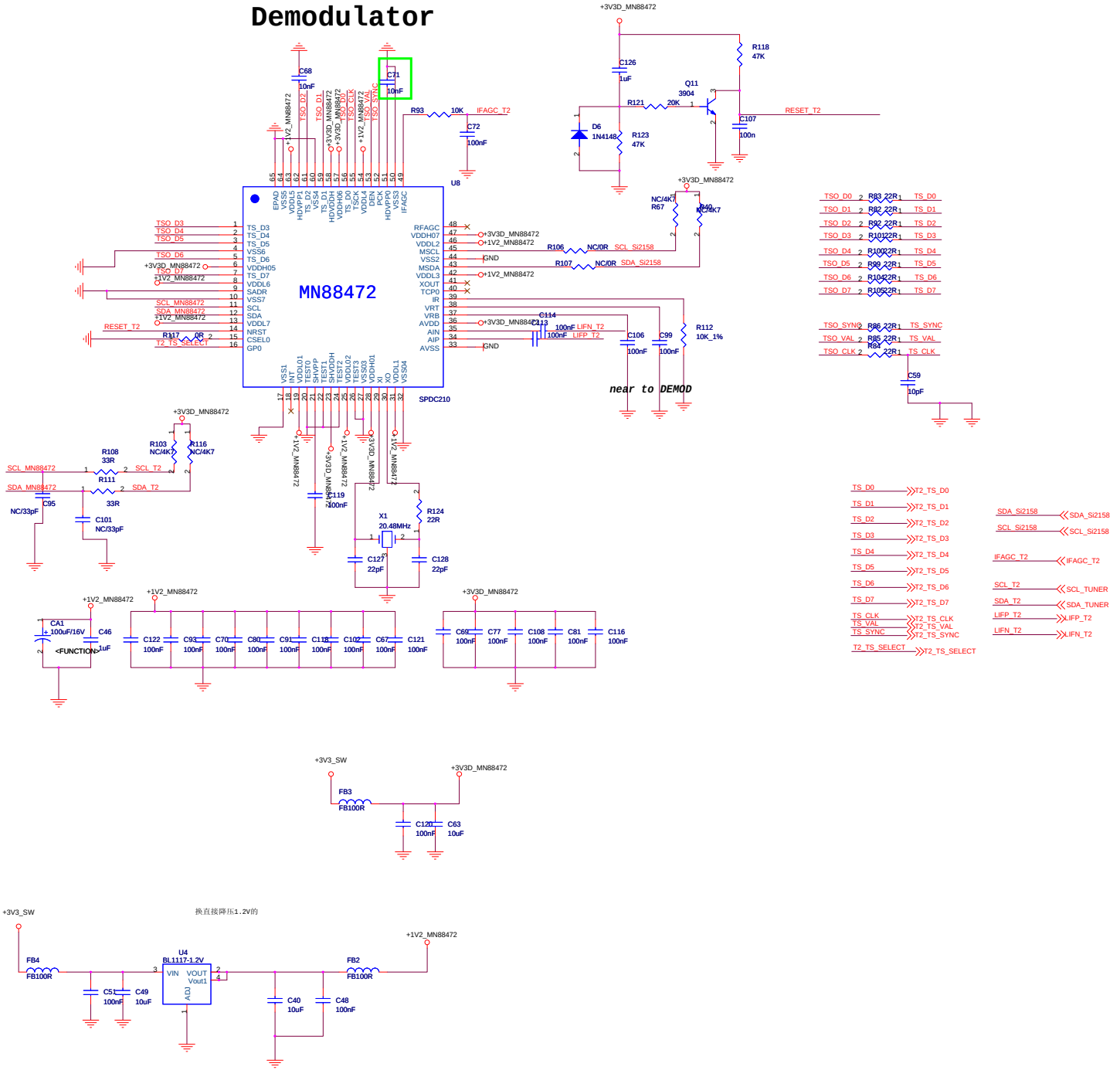

锐显数码 CULTRAVIEW	Title: CV9202L-T
Size: C	Document Number: 12.T2 Demod
Rev: 12	
Date: Friday, August 23, 2013	Sheet 12 of 12

CV9202L-T
Common problems solution

- Power Unit Problem Solving
- Display Unit Problem Solving
- Audio Unit Problem Solving
- Functional Unit Problem Solving

SYSTEM BLOCK

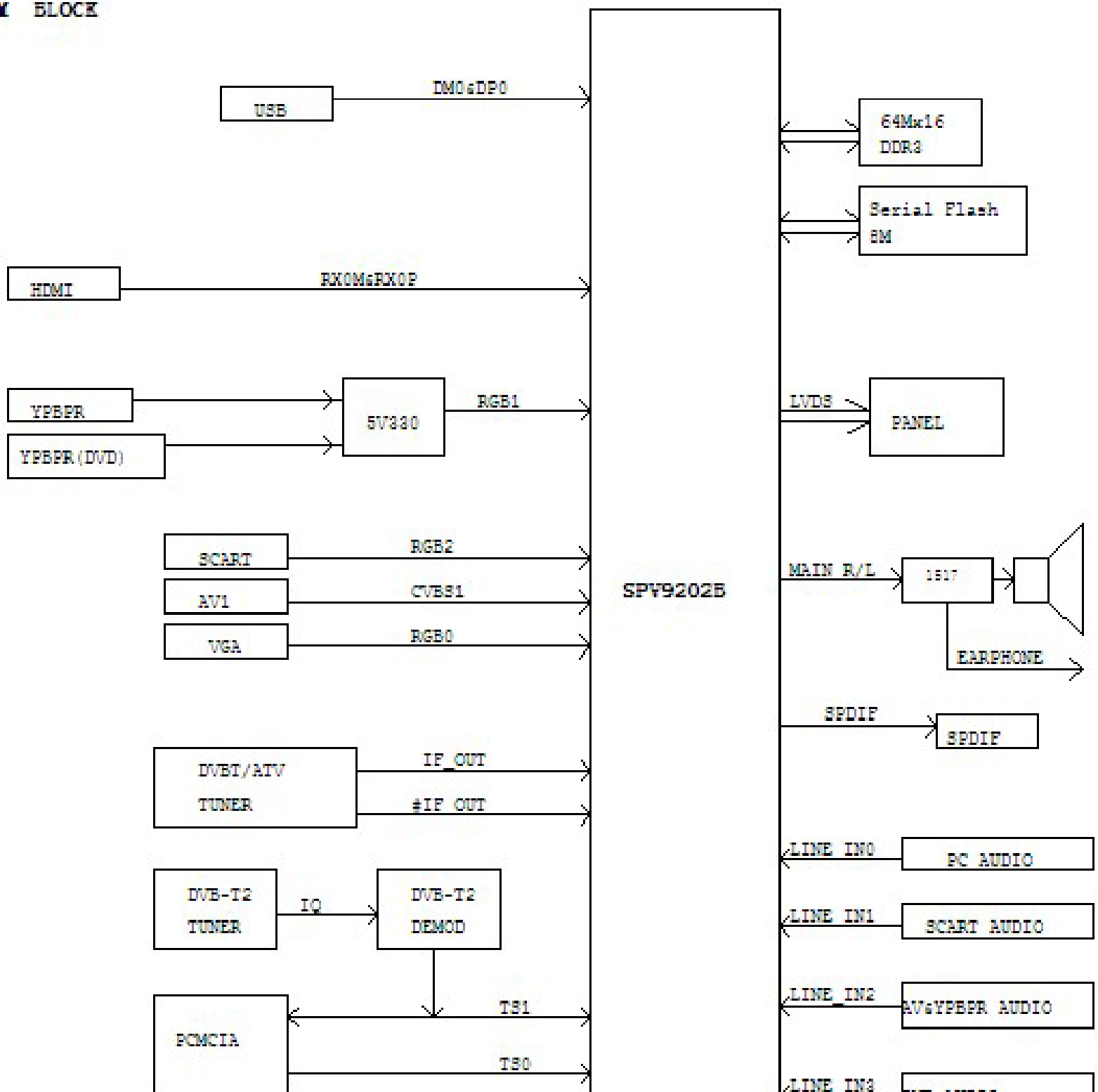

Picture 1: Power Units Problem Solving (Mainboard can not boot)

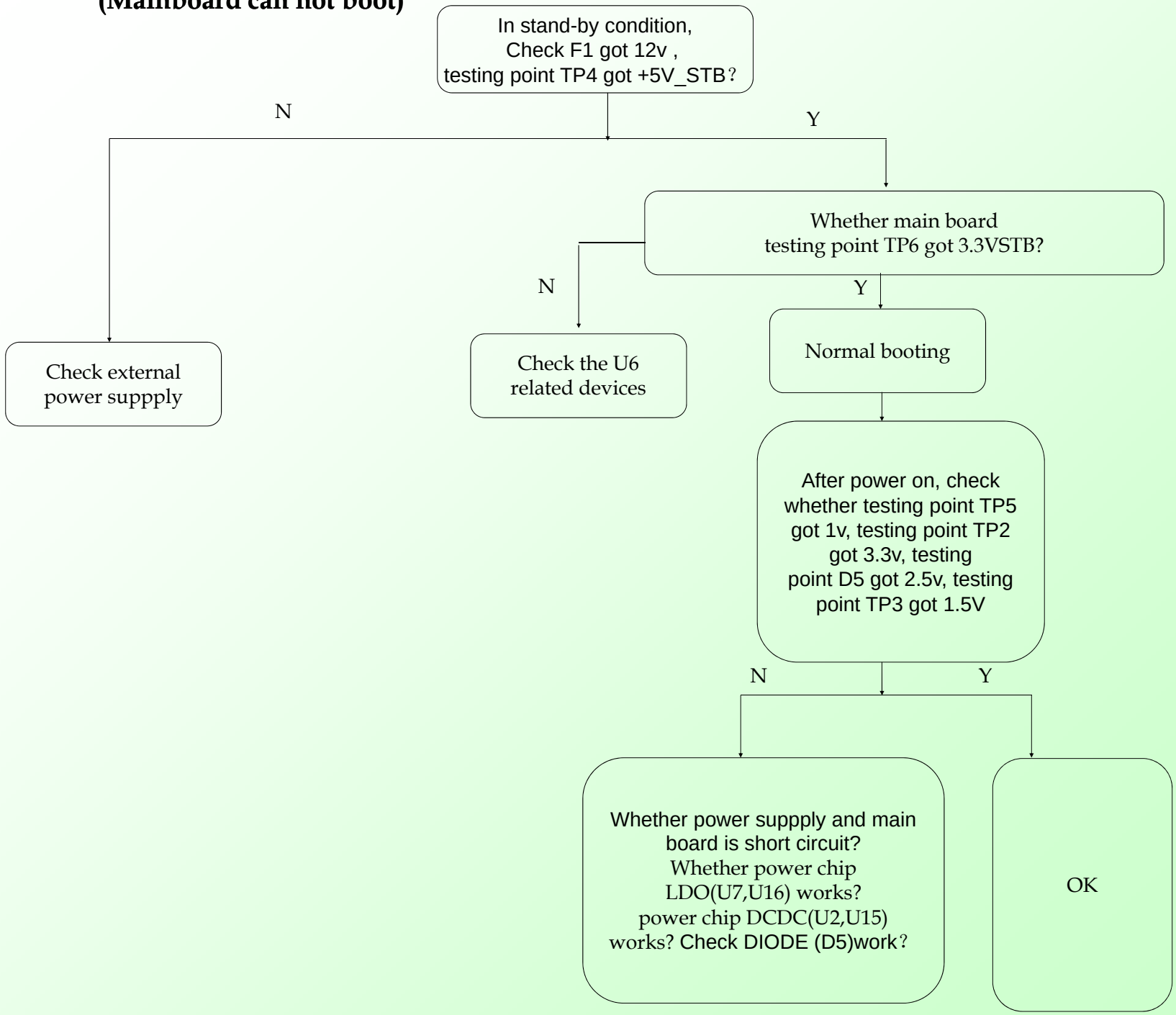

Picture 2

Display unit (black screen)

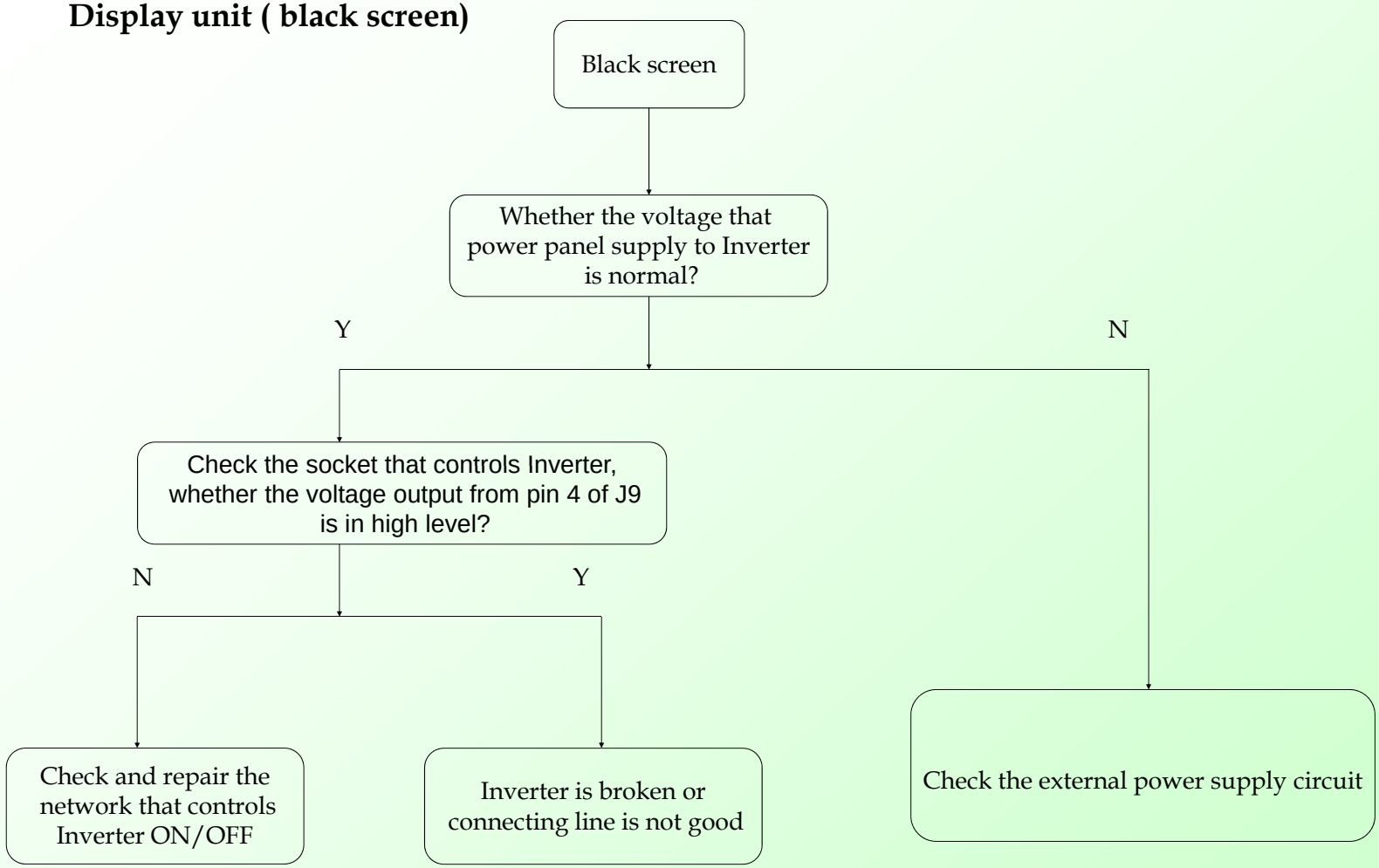

Picture3

Display unit(mess)

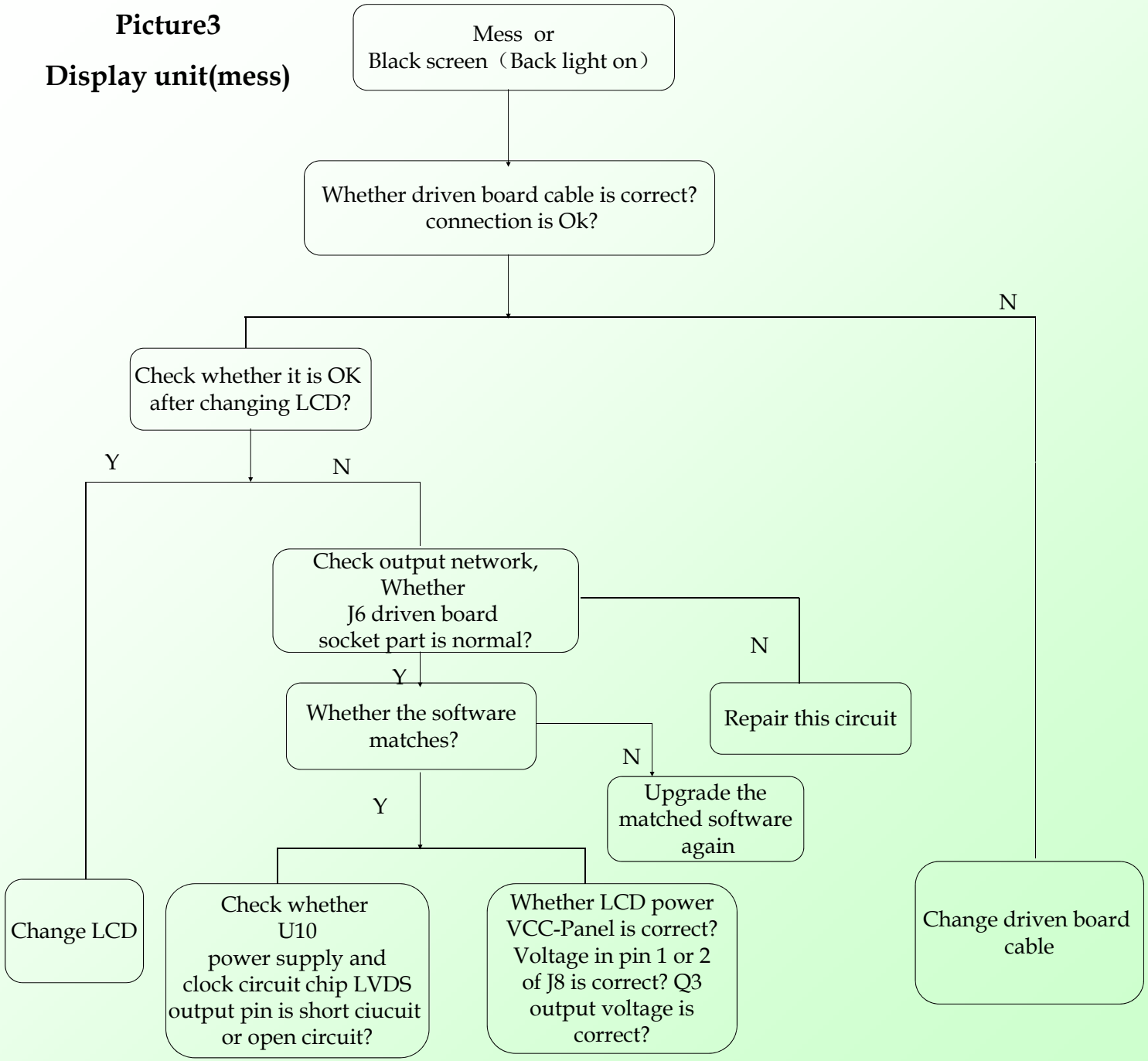

Picture 4

Audio part (no sound)

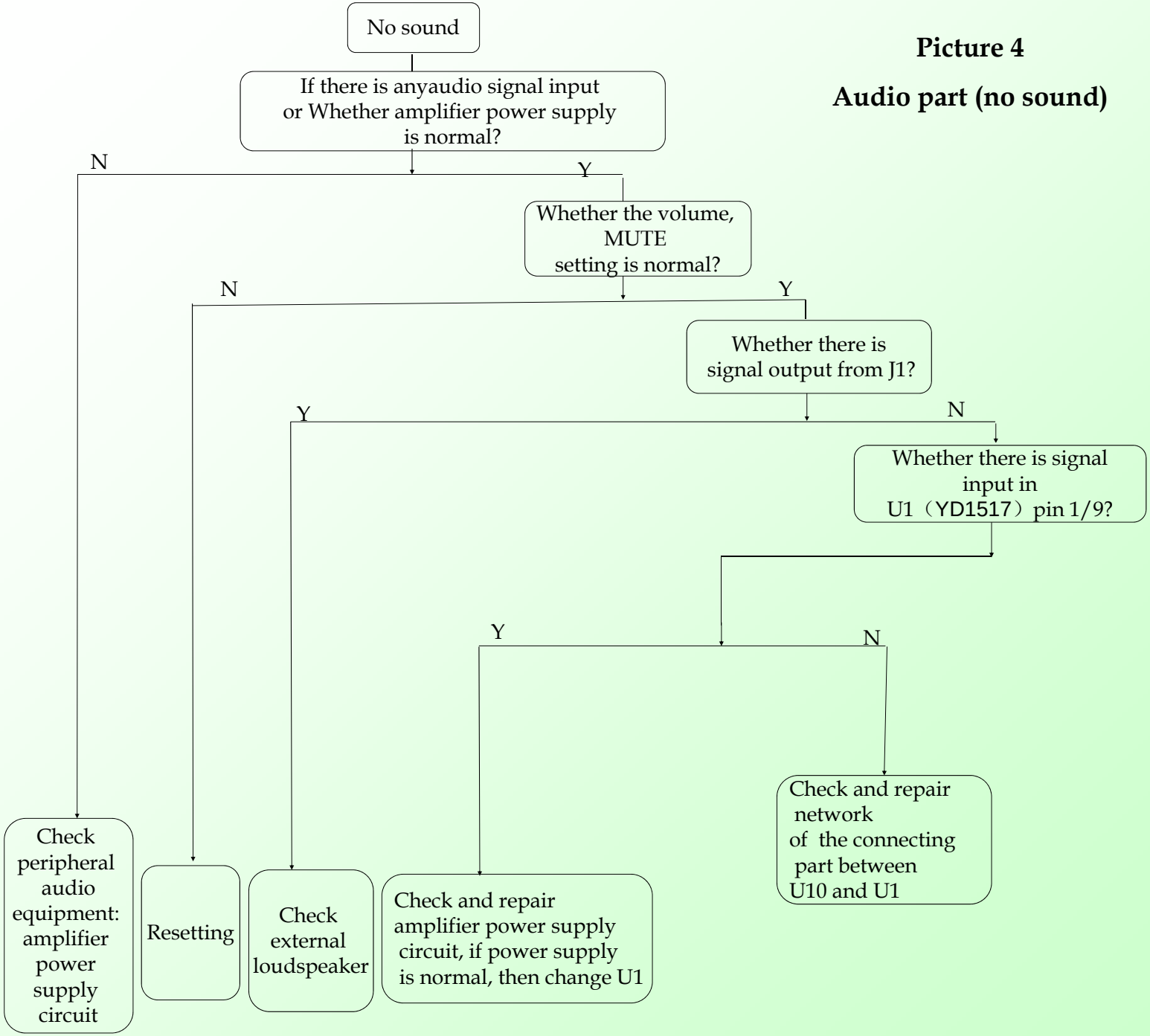

Picture 5
Function unit (ATV video broke down)

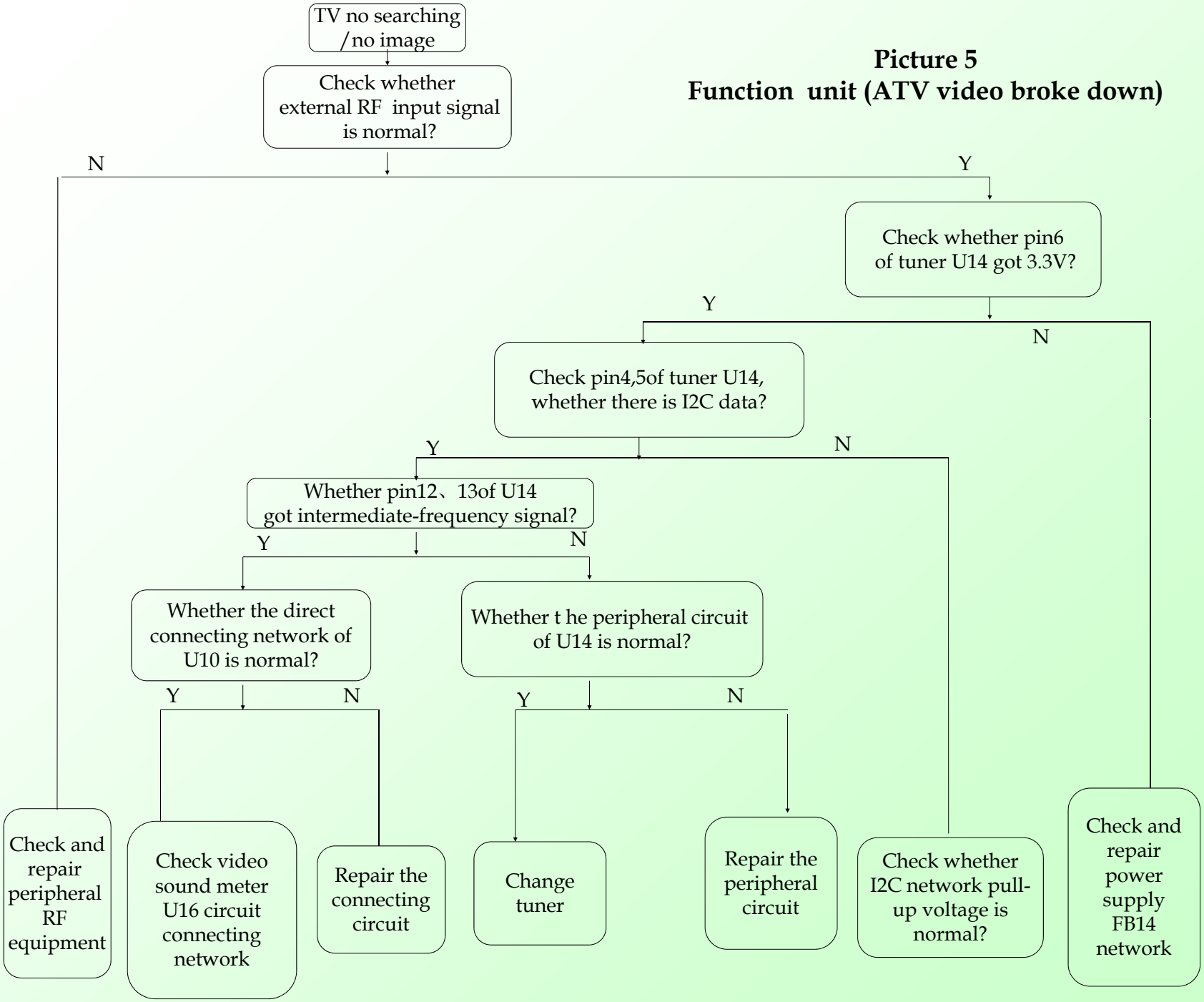

Picture 6

Function unit (ATV/DTV no sound)

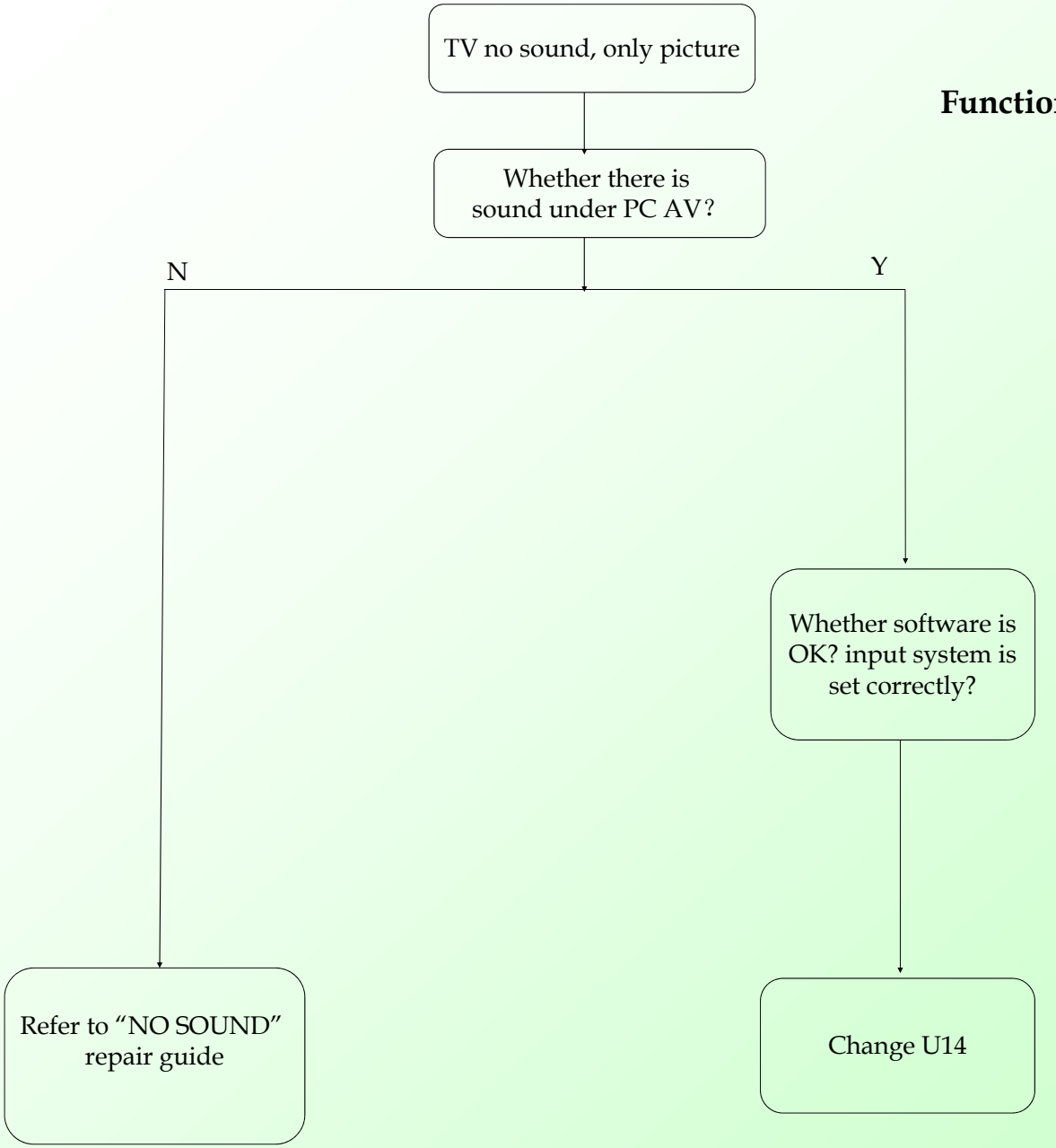

Picture 7

Function unit（PC）

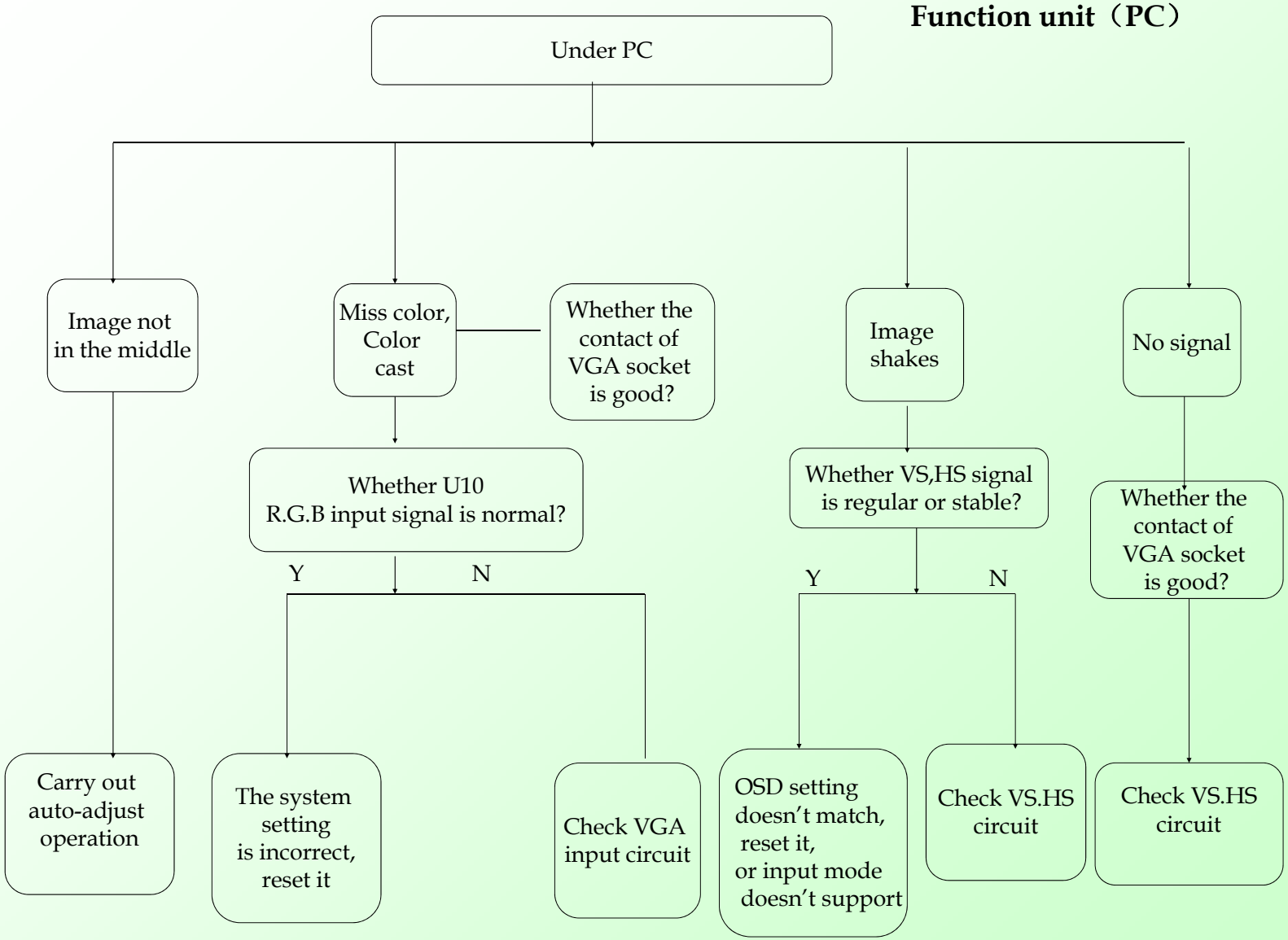

Picture 8

Function unit（HDMI）

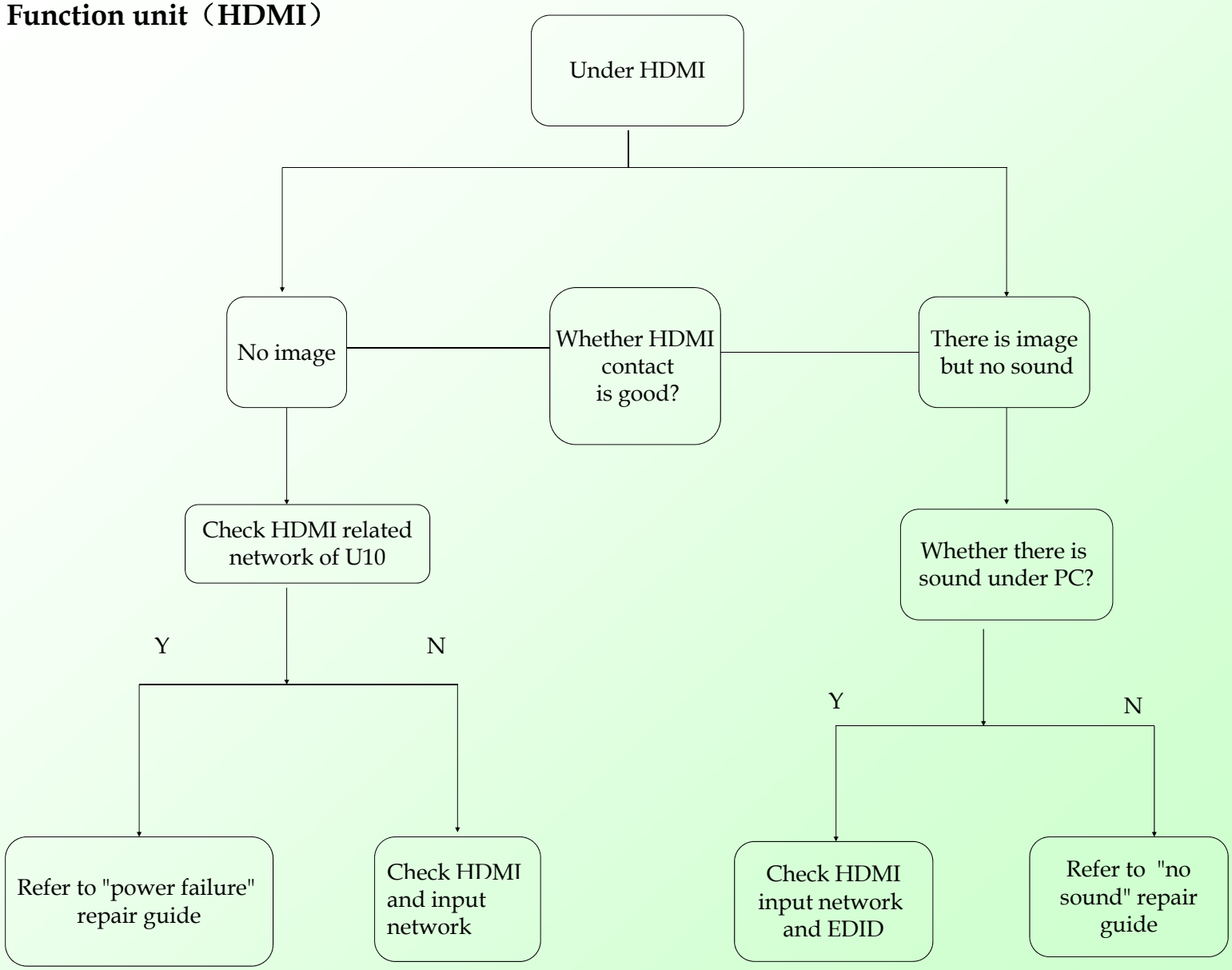

Picture 9
Function unit(DTV-T2 video breakdown)

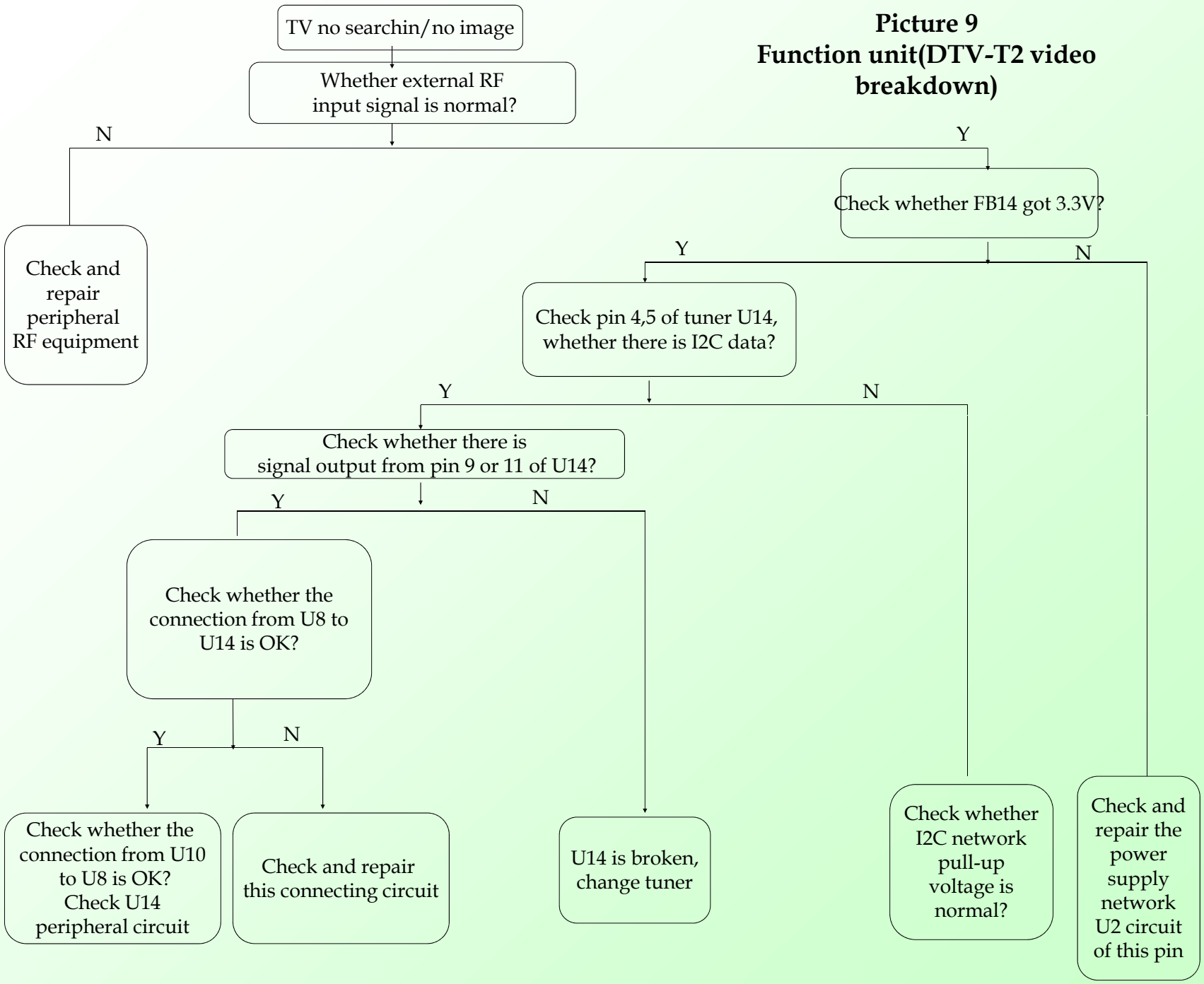

奥源电子科技有限公司
AOYUAN Electronics Technology Co., LTD

东莞市长安镇振安科技园区A7栋
TEL:+86-769-81589595
Fax:+86-769-85473586

Building A7 Zhen'An Technological Industrial Park,ChangAn Town,Dong Guan City, Guang Dong P.R. China
Http://www.ay-power.com

SPECIFICATION
产品规格书

Customer
客　　户 _____

Product Name
产 品 名 称 **LED 二合一**

Model Name
产 品 型 号 **AY042D-1SF67**

Manufacturer 承 制 方			Customer 客 户	
Made 拟制	Checked 审核	Approved 批准	Checked 审核	Approved 批准
研发部 2013.04.27 刘慧	研发部 2013.04.27 何光银	研发部 2013.04.27 陈家词		

Document History

（文件修订记录）

No. 序号	Description 描述	Modified By 修改人	Rev 版本	Date 日期	Approved By 批准人
1	Initial released 首次发行				

Table of Content（目录）

1. SCOPE (范围) **4**

2. FEATURE(特性) **4**

3. PHYSICAL CHARACTERISTICS（物理特性） **4**

3.1 OUTLINE DIMENSIONS(UNIT: MM)(结构图) 4
3.2 WEIGHT（重量） 4
3.3 POWER SUPPLY PIN DEFINITION (电源连接器脚位定义) 5

4. ELECTRICAL REQUIREMENTS（电气特性） **5**

4.1 INPUT ELECTRICAL CHARACTERISTICS OVERVIEW（输入特性） 5
4.2 INRUSH CURRENT(浪涌电流) 5
4.3 OUTPUT VOLTAGES AND LOADS(输出电压与负载) 6
4.4 DC OUTPUT RIPPLE & NOISE(输出纹波与噪音) 6
4.5 PROTECTION(保护) 6
4.6 EFFICIENCY(效率) 7
4.7 GREEN MODE FUNCTION(环保模式) 7
4.8 TURN ON DELAY TIME(开机延迟时间) 7
4.9 HOLD-UP TIME(关机保持时间) 7
4.10 MEAN TIME BETWEEN FAILURES (MTBF) (平均无故障时间) 8
4.11 HI-POT TEST(耐压测试) 8

5. ENVIRONMENTAL REQUIREMENT（工作环境） **8**

5.1 TEMPERATURE（环境温度） 8
5.2 HUMIDITY（环境湿度） 8
5.3ALTITUDE（海拔高度） 8

6. INTERNATIONAL STANDARDS(国际性认证) **8**

6.1 EMC (电磁兼容性) 8
6.2 SAFETY (安全) 9

7. NOTICE（注意事项） **10**

1. Scope (范围)

The AY042D-1SF67 comprises a 36 Watts single-output LED LIPS.
（AY042D-1SF67 是一款单路输出总输出功率为 36 瓦的 LED 二合一电源）

2. Feature(特性)

All products including samples delivered will meet all the requirements as outlined in the document. The basic requirements of the design features are listed below:
（所有提供的产品包括样品将满足本文件所描述的产品规格。其设计基本要求如下）

* Output Voltages: +12V, One String LED Drive.
（输出电压： +12V, 单组通道 LED 驱动）
* Short circuit protection / Over current protection/ Fuse protection
（短路保护/过流保护/保险丝保护）
* High efficiency ： The efficiency is greater than 75%
（效率：大于 75%）

3. Physical characteristics（物理特性）

3.1 Outline dimensions(unit: mm)(结构图)

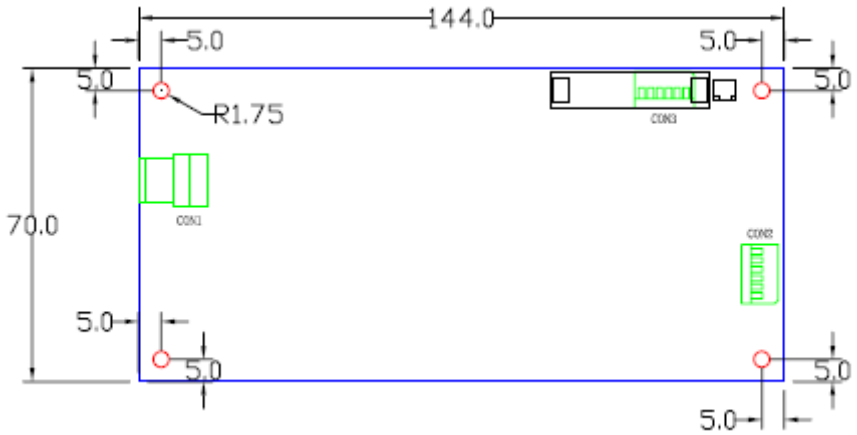

144(L)*70(W)*14(H) mm. (长L *宽W * 高H)

Note: The sample height not include the components pin and PCB
样品的高度不包括元件引脚和 PCB 板

3.2 Weight（重量）

约 125 g

3.3 Power supply pin definition (电源连接器脚位定义)

Table.1 Pin-CON1 Connection and Function（插座 CON1 的引脚定义）

NO.	Pin Connection	Function
1	AC-L	AC INPUT LINE
2	NC	NC
3	AC-N	AC INPUT NEUTRAL

Note: CON1 :90º connection, type: pitch3.96mm(90º 插座 CON1 的间距是 3.96 毫米)

Table 2 Pin-CON2 Connection and Function（插座 CON2 的引脚定义）

NO.	Pin connection	Function
1.2	+12V	+12V OUTPUT
3	ON/OFF	BACK LIGHT ON/OFF CONTROL
4	ADJ	BRIGHTNESS CONTROL
5.6	GND	GROUND

Note: CON2 : 1. 90º connection, type: pitch2.0mm (90º 插座 CON2 的间距是 2.0 毫米)

2. ON/OFF voltage，on is 2.5V，off is 0.8V（开机电压 2.5V，关机电压 0.8V）

3. ADJ voltage is 0~5V。0V is minimum output，5V is maximum output。

（亮度调节电压范围在 0~5V 之间，且 0V 最暗，5V 最亮）

Table3 Pin- CN1F Connection and Function（插座 CN1F 的引脚定义）

NO.	Pin connection	Function
2	LED -	LED current sense for string
1	LED +	LED power supply

Note: CN1F : 90º connection, type: pitch2.0mm (90º 插座 CN1F 的间距为 2.0 毫米)

4. Electrical requirements（电气特性）

4.1 Input Electrical Characteristics Overview（输入特性）

Table. 4 Input Electrical Characteristics(输入特性)

Input voltage range 输入电压	90Vac to 264Vac
Normal voltage range 标称输入	100Vac to 240Vac
Frequency range 频率范围	50Hz/60Hz±5%
Max input ac current 满载输入电流	2.0A max at full load and 90Vac condition

4.2 Inrush Current(浪涌电流)

The cold inrush current must not cause the input fuse to open or cause damage to components

冷启动浪涌电流不会造成保险丝开路或者其它元器件损坏.

4.3 Output Voltages and Loads(输出电压与负载)

Table.5 Output Voltage, Current & Regulation.（输出调整率）

Output Voltage 输出电压	Regulation 调整率	Min. current 最小负载(A)	Rate Load 标称负载(A)	Max. current 最大负载(A)
+12V	+11.4~ 12.6V	0.016	1.5	1.5
LED DRIVE	480mA~550mA	25V	28V	30V

Note: 1. ADJ voltage is 5V（ADJ 电压为 5V）

2. The Max current or power should be test at other of dc output at Rated load, and the max current pulse width within 100ms

最大电流或功率的测试是在其它各组负载在标称值时测试，且脉宽小于 100 毫秒。

3. LED DRIVE should be test at CV mode

LED DRIVE 测试条件为 CV 模式。

4.4 DC Output Ripple & Noise(输出纹波与噪音)

Table.6 Ripple and Noise（输出纹波和噪音）

Signal Name	Ripple & Noise (mV)
+12V	≤240

Note:1. Measurements shall be made with an oscilloscope with 20MHz bandwidth.

示波器须设置在 20 兆赫兹带宽

2. Outputs shall be bypassed at the connector with a 0.1uF ceramic capacitor and a 10uF electrolytic capacitor to simulate system loading.

输出须并联 0.1uF 的陶瓷电容和 10uF 的电解电容来模拟负载

4.5 Protection(保护)

4.5.1 DC Output Over current Protection(输出过流保护)

Table.7 DC Output Over current Protection(输出过流保护)

Output Voltage	Over Current(A)	Specification
+12V	3.0A~6.0A	Hiccup or Shutdown

Note: The over current protection should be test at other of dc output at Rated load.

过电流保护应在其它 DC 输出工作在标称负载条件下测试。

4.5.2 DC Output Short Circuit Protection (输出短路保护)

Table.8 DC Output Over Short Protection(输出短路保护)

Output Voltage	Specification
+12V	Hiccup or Shutdown
LED Drive	Hiccup or Shutdown

Note: Each DC output shall have short circuit protection. A short condition on any of DC outputs shall cause no damage to the power supply. The unit shall recover function automatically or by next AC cycle as soon as the short condition is removed .The Short Circuit protection should be test at other of dc output at Rated load.

每路输出都有输出短路保护功能，且短路时不会对电源造成损害。一旦短路条件解除，电源将尽快自动或通过下一次重新开机恢复正常功能。另外输出短路保护应在其它 DC 输出工作在标称负载条件下测试

4.5.3 Fuse protection (保险丝保护)

The Fuse inside the power supply shall open when the AC input current is over the rated current of fuse. This Fuse protection will cause switching power supply to fail.

当 AC 输入电流超过保险丝的额定电流的时候，电源内部的保险丝将熔断，呈开路状态。保险丝保护启动后电源将不能启动

4.5.4 Reset After Shutdown（保护功能复位）

Recycle the ON/OFF signal, the power supply will restart after the fault removed.

故障去除后，关掉 ON/OFF 信号再打开，电源即可恢复

4.6 Efficiency(效率)

75% min. It will be measured at the nominal load and typical line (230VAC)

效率在标称负载和典型输入电压下测量（230V），效率≥75%

4.7 Green mode function(环保模式)

Green mode function: input power should be under 0.5W at 230Vac.（+12V/16mA）

环保模式：在230V交流输入下，输入功率不超过0.5瓦（+12V/16mA）

4.8 Turn on delay time(开机延迟时间)

The turn on delay form application of AC input power to the establishment of rated DC power voltage should not exceed 3 seconds during the range from 100 Vac to 240 Vac with rated load.

开机延迟时间是指，在 100~240V 范围交流输入与满载情况下，从有交流输入到有额定直流电压输出的时间间隔，并且此时间间隔不能超过 3 秒

4.9 Hold-up time(关机保持时间)

The power supply shall maintain voltage regulation within the specified limits in table 5 for at least 10 milliseconds (one cycle drop) after losing of input voltage under the following conditions:

关机时间是指，在如下的条件下关断输入电压，电源输出电压在满足表格 5 所示的规格的情况下持续的时间，且这段时间最少保持 10 毫秒

Input voltage（输入电压）: 230Vac

Loading（负载）: rated output load（标称输出负载）

4.10 Mean time between failures (MTBF) (平均无故障时间)

50,000hrs at 25 degrees centigrade when calculated using MIL-HDBK-217F. The vendor can use agreed upon F.I.T. (failure - in - time) number in place of MTBF.

在 25 摄氏度条件下，使用 MIL-HDBK-217F 估计电源的平均无故障时间大约为 50,000 小时。也可以使用商用 F.I.T.来计算平均无故障时间

4.11 Hi-pot Test(耐压测试)

100% Hi-pot tested, Primary to second: 3KVAC or 4242VDC 3 second

初级到次级，100%耐高压测试，条件是 3000V 交流或 4242V 直流输入，持续时间 3 秒

5. Environmental requirement（工作环境）

5.1 Temperature（环境温度）

Operating	:	0℃to +50℃ (non-condensing)
Store	:	-20℃ to +70℃

5.2 Humidity（环境湿度）

Operating	:	10% to 90% (non-condensing)
Store	:	5% to 95%

5.3Altitude（海拔高度）

Operating	:	10,000 ft.(max)
Store	:	20,000ft.(max)

6. International Standards(国际性认证)

6.1 EMC (电磁兼容性)

6.1.1 EMI standards (EMI 标准)

The power supply shall compliance with the following radio disturbance Criterion

该电源应符合下列无线电干扰标准

☐ Sound and television broadcast receivers and associated equipment
声音和电视广播接收机及有关设备

EN55013	:	Sound and television broadcast receivers and associated equipment radio disturbance characteristics limits and methods of measurement
GB13837	:	声音和电视广播接收机及有关设备无线电干扰特性限值和测试方法
FCC CFR 47 Part 15 subpart B:美国联邦通信法规第47卷15章内无意式的辐射器材的相关规定		

6.1.2 EMS standards (EMS 标准)

The power supply shall compliance with the following immunity Criterion
该电源应符合下列抗扰度标准

☐ Sound and television broadcast receivers and associated equipment
声音和电视广播接收机及有关设备

EN55020	:	Sound and television broadcast receivers and associated equipment immunity characteristics limits and methods of measurement	
GB/T 9383	:	声音和电视广播接收机及有关设备抗扰度限值和测试方法	
EN61000-4-2	:	Electrostatic discharge immunity test	CON:±4KV; AIR:±8KV; 10 charge/point for Con; 10 charge/point for Air
GB/T17626.2	:	静电放电抗扰度试验	
EN61000-4-3	:	Radiated, radio-frequency, electromagnetic field immunity test	900 MHz, 3 V/m, duty cycle 1/8, 217 Hz repetition frequency
GB/T17626.3	:	射频电磁场抗扰度试验	
EN61000-4-4	:	Electrical fast transient/burst immunity test	AC port:±1KV
GB/T17626.4	:	电快速脉冲群抗扰度试验	

6.2 Safety (安全)

The power supply shall compliance with the following safety Criterion
电源应符合以下安全标准

☐ Sound and television broadcast receivers and associated equipment
声音和电视广播接收机及有关设备

EN60065	:	Audio， video and similar electronic apparatus – Safety requirements
IEC60065	:	Audio， video and similar electronic apparatus – Safety requirements
GB 8898	:	音频、视频及类似电子设备安全要求
UL60065	:	UL Standard for Safety for Audio, Video and Similar Electronic Apparatus – Safety Requirements

7. Notice（注意事项）

7. 1 For safety issue, please keep 4.0mm at least from the metal parts of the system. Or put a high-voltage insulator between the power and the metal parts to avoid the situation of Hi-POT failure or arcing---etc.

出于安全问题的考虑,请在组装时确保板和系统金属材料间保持至少 4mm 以上的距离,或者使用具有足够绝缘等级的绝缘材料加以隔离,以避免产生高压放电

7.2 Don’t twist, deform, drop or knock the power supply during assembly

组装时,请确保无扭曲,弯折, 掉落及碰撞等现象的发生

7.3 The power supply is usually designed without the case. Please take care about ESD at anytime

因为本产品为无外壳之设计, 故在任何时候均应注意静电防护

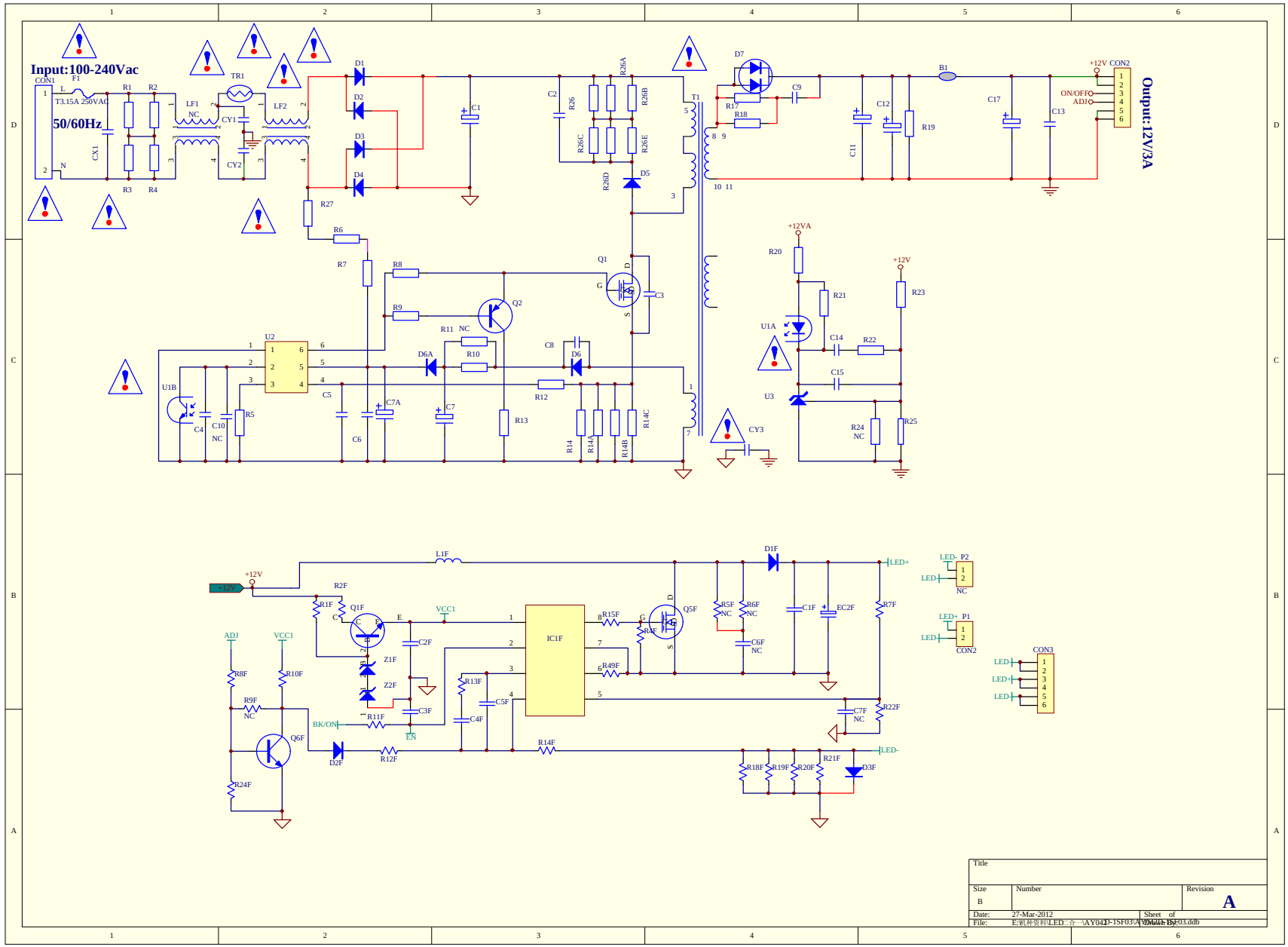

Title

Size	Number	Revision
B		A

Date: 27-Mar-2012 Sheet of

File: E:\机种资料\LED二合一\AY04D-TSF03A\Model 1\AY04D-TSF03.ddb

PDF 文件使用 "pdfFactory Pro" 试用版本创建 www.fineprint.cn