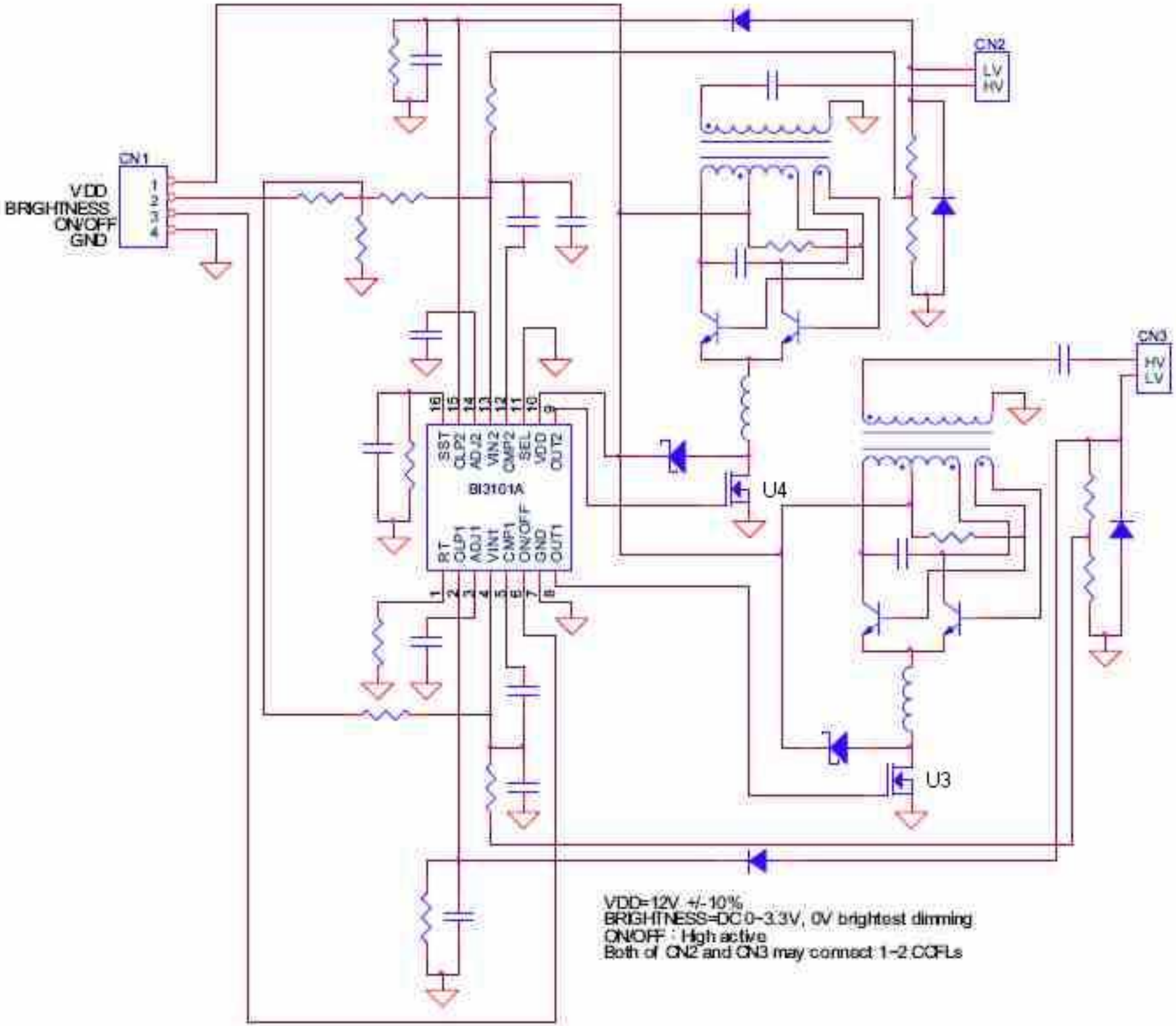
CN1
VDD
BRIGHTNESS
ON/OFF
GND
CN2
LV
HV
CN3
HV
LV
BI3101A
SST
CLP2
ADJ2
VIN2
CMP2
SEL
VDD
OUT2
RT
CLP1
ADJ1
VIN1
CMP1
ON/OFF
GND
OUT1
U4
U3
VDD=12V +/-10%
BRIGHTNESS=DC 0~3.3V, 0V brightest dimming
ON/OFF : High active
Both of CN2 and CN3 may connect 1~2 CCFLs