Circuit Diagram for SF2583 and SF2983

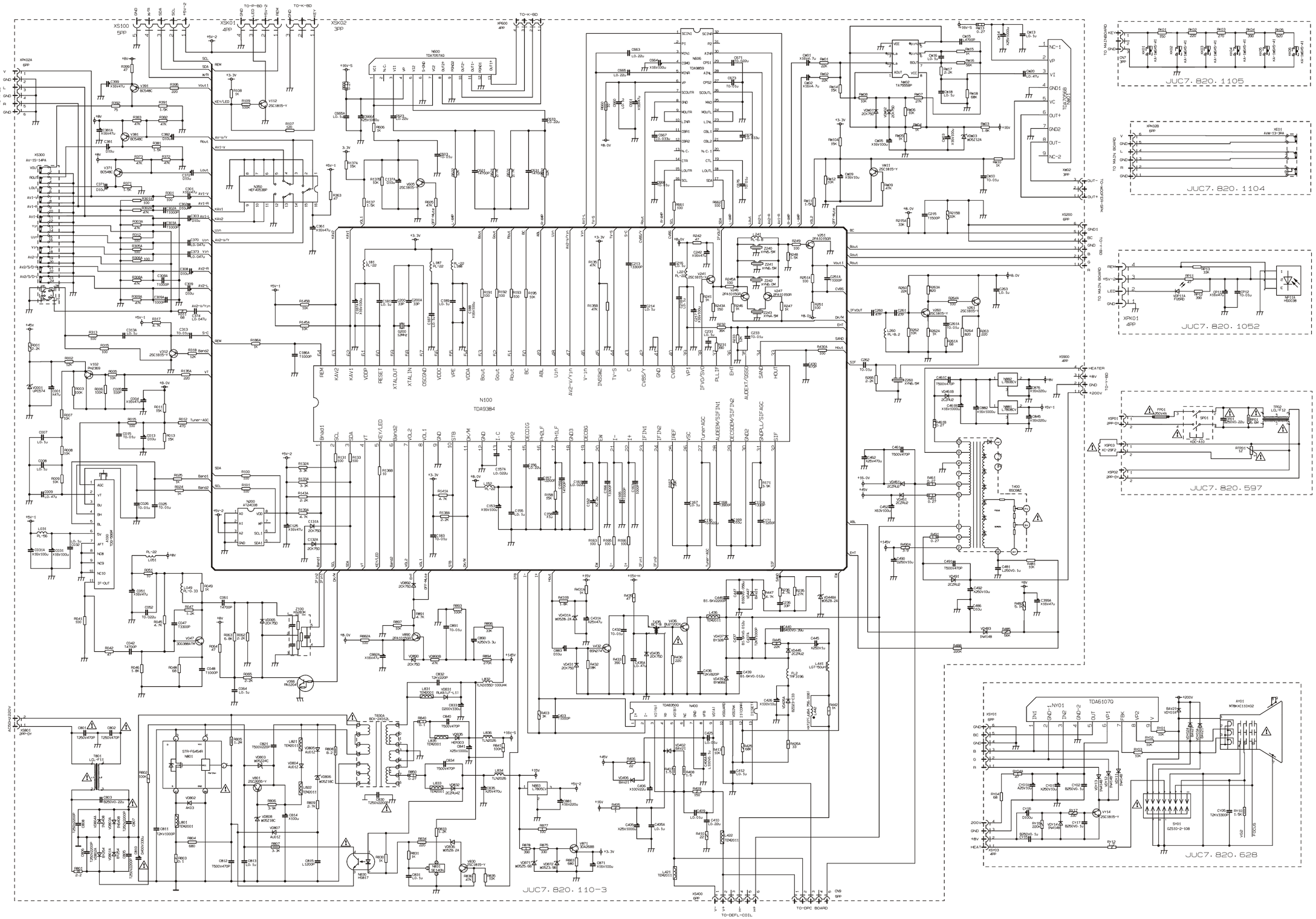

This circuit diagram is only for reference.
Specifications are subject to change without notice.

1. Any components identified by ⚠ have special safety-related characteristics.
   Use replacement components which have the same characteristics as the original parts.
2. ⏚ Cold ground ⊥ Hot ground
3. ⚠ FDA This symbol tells you that replacement components related to high voltage, beam current and X-ray radiation should not be made at will.