DAEWOO 2154 (8)

MAIN BOARD

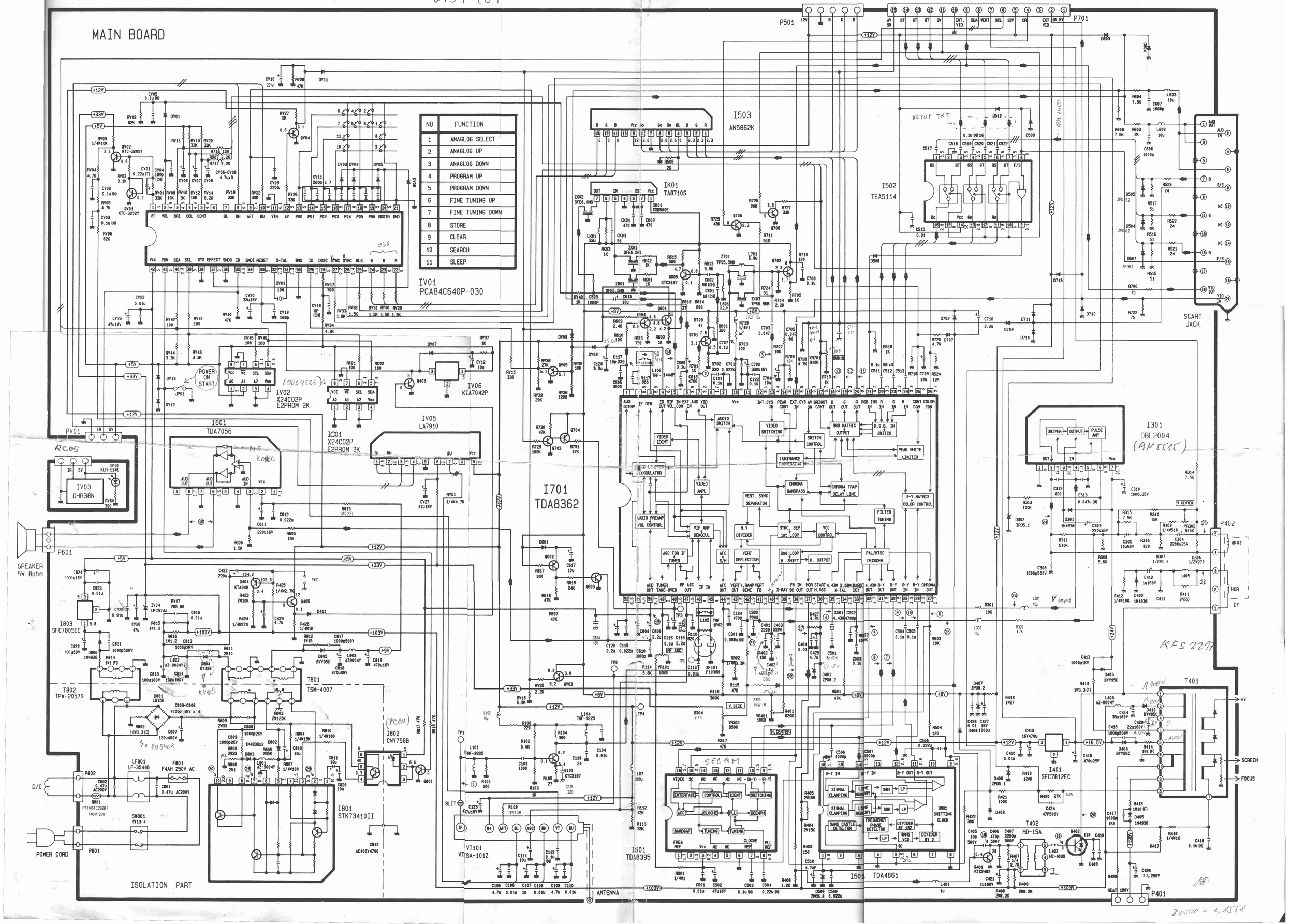

NO	FUNCTION
1	ANAGLOG SELECT
2	ANAGLOG UP
3	ANAGLOG DOWN
4	PROGRAM UP
5	PROGRAM DOWN
6	FINE TUNING UP
7	FINE TUNING DOWN
8	STORE
9	CLEAR
10	SEARCH
11	SLEEP