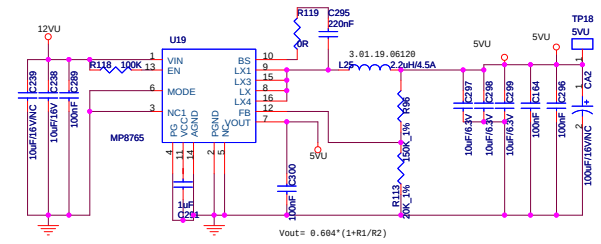

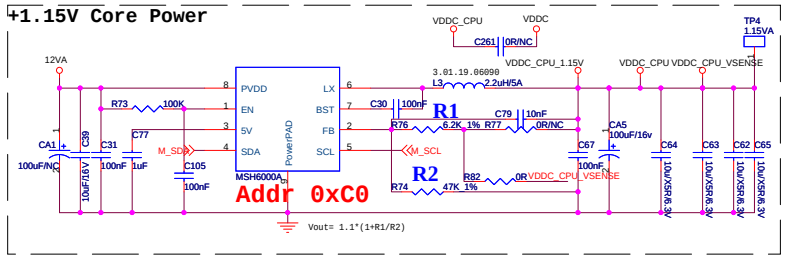

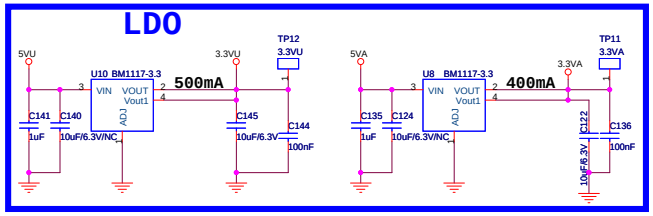

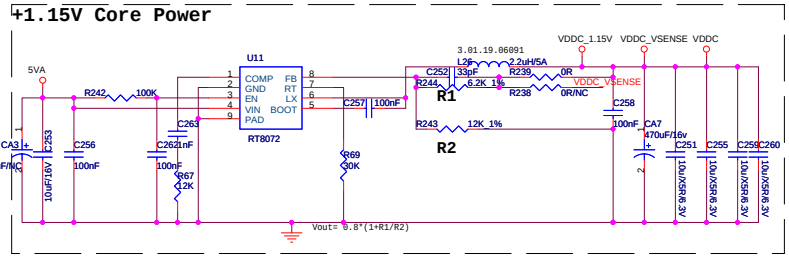

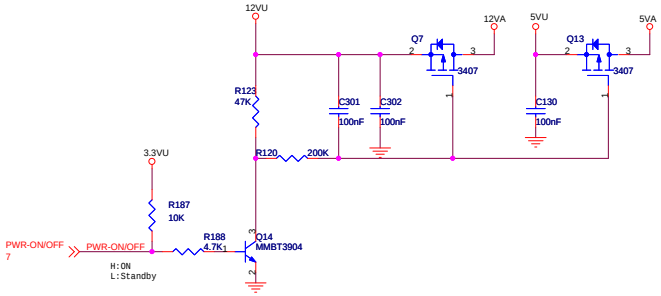

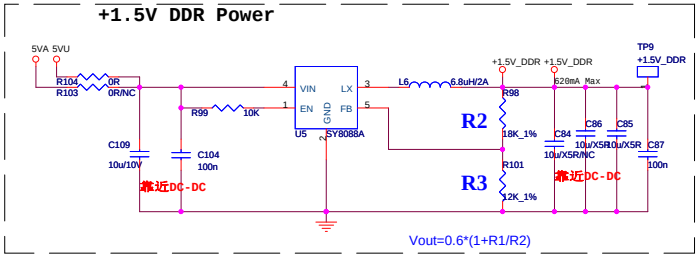

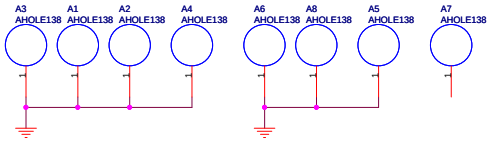

锐显数码 CULTRAVIEW	Title	CV628H-T42	
Size C	Document Number	02.POWER	Rev 11
Date: Monday, February 02, 2015	Sheet 2 of 11		

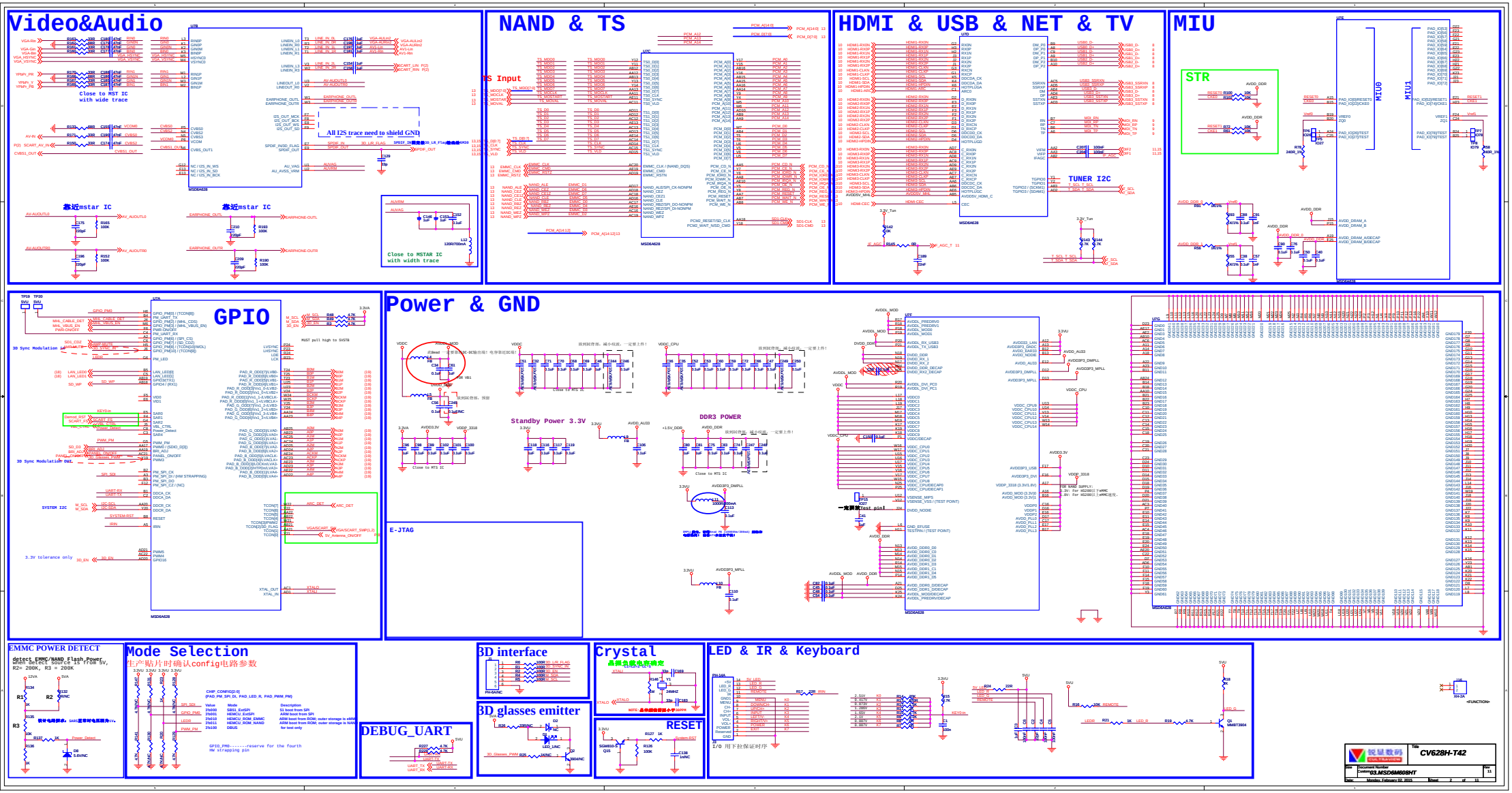
Video&Audio
NAND & TS
HDMI & USB & NET & TV
MIU
GPIO
Power & GND
E-JTAG
EMMC POWER DETECT
Mode Selection
DEBUG_UART
3D interface
3D glasses emitter
Crystal
RESET
LED & IR & Keyboard
CV628H-T42

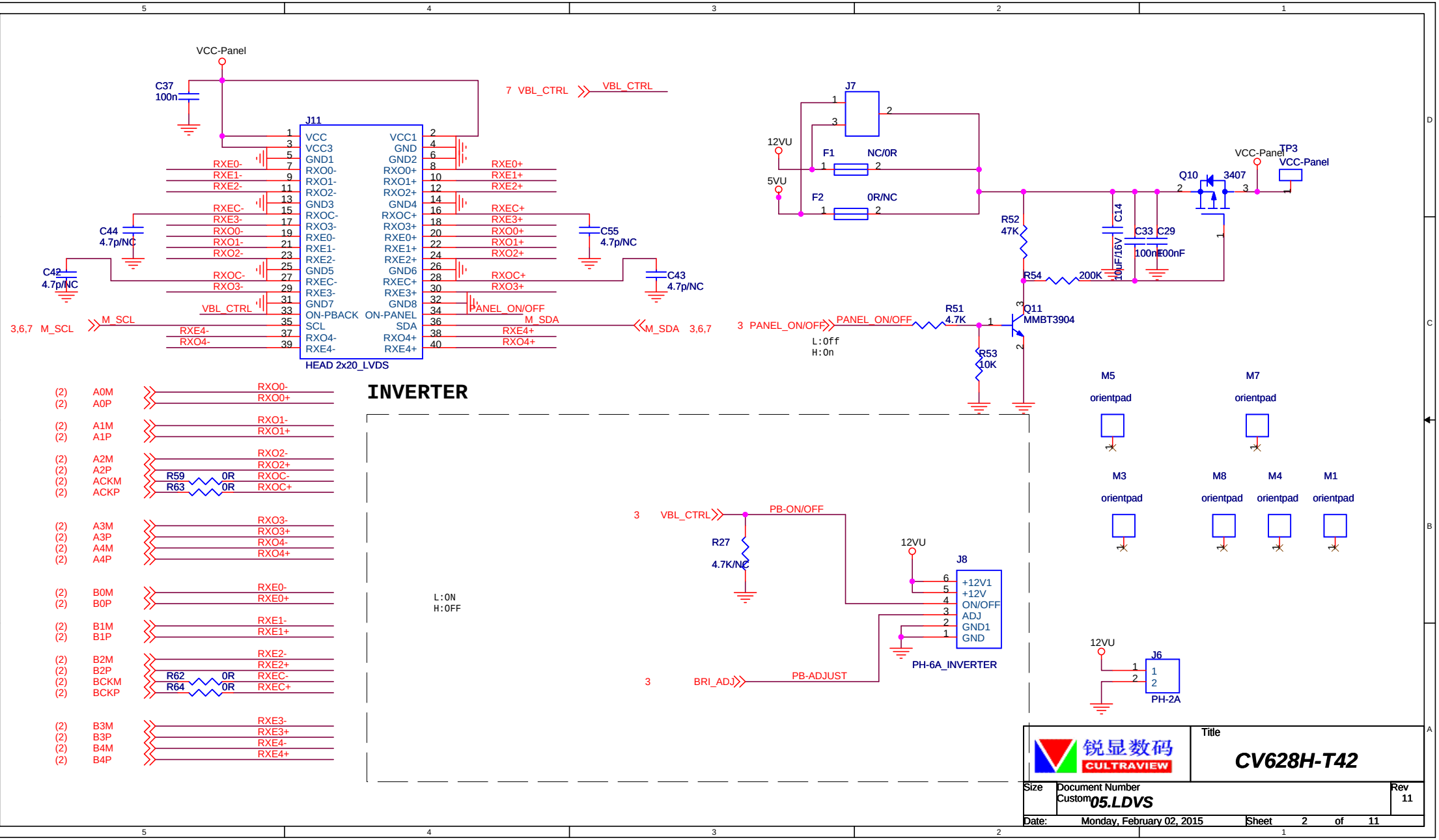
VCC-Panel
C37
100n
J11
HEAD 2x20_LVDS
VCC
VCC3
GND1
RXO0-
RXO1-
RXO2-
GND3
RXOC-
RXO3-
RXE0-
RXE1-
RXE2-
GND5
RXEC-
RXE3-
GND7
ON-PBACK
SCL
RXO4-
RXE4-
VCC1
GND
GND2
RXO0+
RXO1+
RXO2+
GND4
RXOC+
RXO3+
RXE0+
RXE1+
RXE2+
GND6
RXEC+
RXE3+
GND8
ON-PANEL
SDA
RXO4+
RXE4+
7 VBL_CTRL
VBL_CTRL
C44
4.7p/NC
C42
4.7p/NC
C55
4.7p/NC
C43
4.7p/NC
3,6,7 M_SCL
M_SCL
VBL_CTRL
PANEL_ON/OFF
M_SDA
M_SDA 3,6,7
J7
12VU
5VU
F1
NC/0R
F2
0R/NC
R52
47K
R54
200K
C14
10uF/16V
C33
100n
C29
E00nF
Q10
3407
VCC-Panel
TP3
VCC-Panel
3 PANEL_ON/OFF
PANEL_ON/OFF
R51
4.7K
Q11
MMBT3904
R53
10K
L:Off
H:On
INVERTER
(2) A0M
(2) A0P
(2) A1M
(2) A1P
(2) A2M
(2) A2P
(2) ACKM
(2) ACKP
R59 0R
R63 0R
(2) A3M
(2) A3P
(2) A4M
(2) A4P
(2) B0M
(2) B0P
(2) B1M
(2) B1P
(2) B2M
(2) B2P
(2) BCKM
(2) BCKP
R62 0R
R64 0R
(2) B3M
(2) B3P
(2) B4M
(2) B4P
RXO0-
RXO0+
RXO1-
RXO1+
RXO2-
RXO2+
RXOC-
RXOC+
RXO3-
RXO3+
RXO4-
RXO4+
RXE0-
RXE0+
RXE1-
RXE1+
RXE2-
RXE2+
RXEC-
RXEC+
RXE3-
RXE3+
RXE4-
RXE4+
L:ON
H:OFF
3 VBL_CTRL
PB-ON/OFF
R27
4.7K/NC
12VU
J8
+12V1
+12V
ON/OFF
ADJ
GND1
GND
PH-6A_INVERTER
3 BRI_ADJ
PB-ADJUST
M5
orientpad
M7
orientpad
M3
orientpad
M8
orientpad
M4
orientpad
M1
orientpad
12VU
J6
PH-2A
锐显数码
CULTRAVIEW
Title
CV628H-T42
Size
Document Number
Custom
05.LDVS
Rev
11
Date: Monday, February 02, 2015
Sheet 2 of 11

YPBPR & AV IN

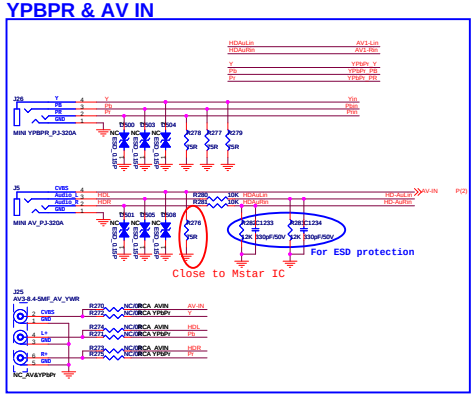

Switcher

SPDIF&OPTICAL

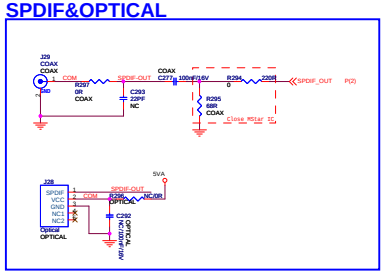

Title	CV628H-T42		
Size D	Document Number 06.VIDEO		Rev 11
Date: Monday, February 02, 2015		Sheet 2 of 11	

VGA & AUDIO

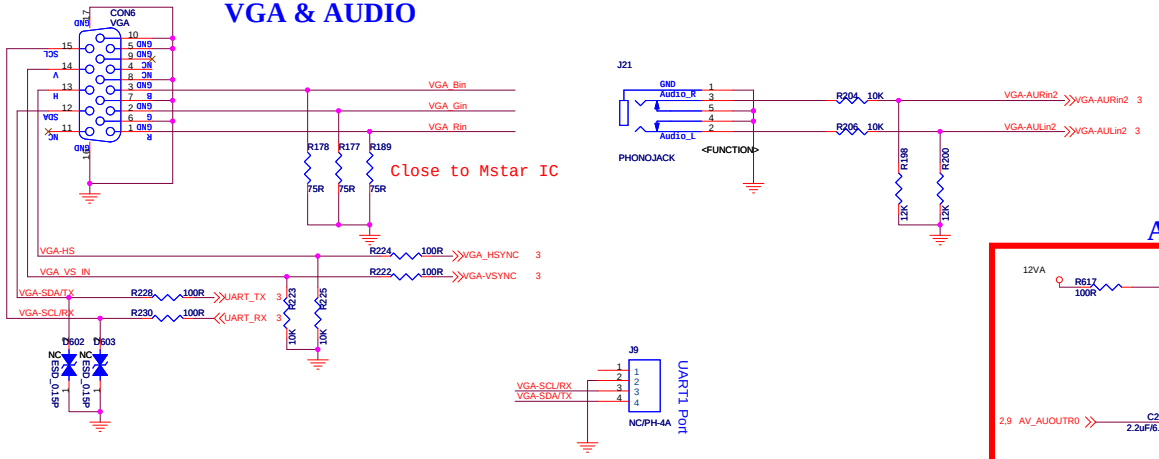

AUDIO OP

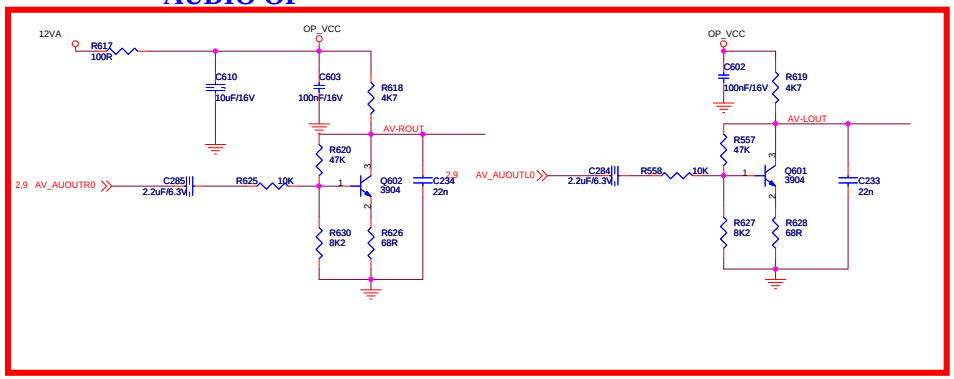

SCART

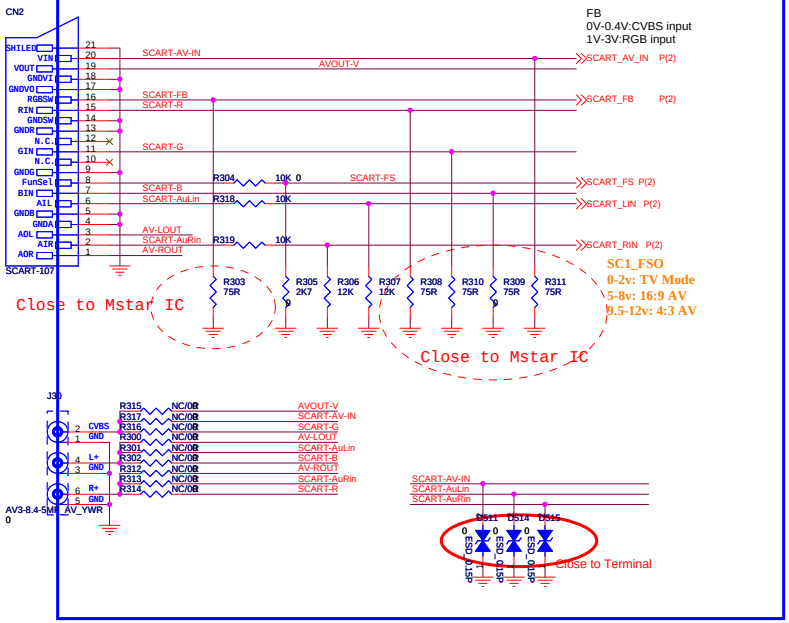

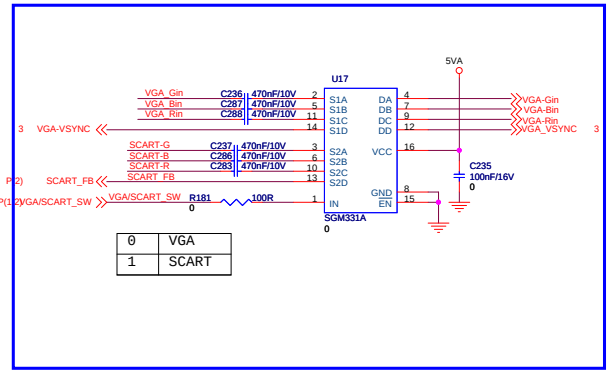

0	VGA
1	SCART

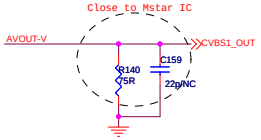

Title	CV628H-T42
Size	C
Document Number	07.VGA
Rev	11
Date:	Monday, February 02, 2015
Sheet	2 of 11

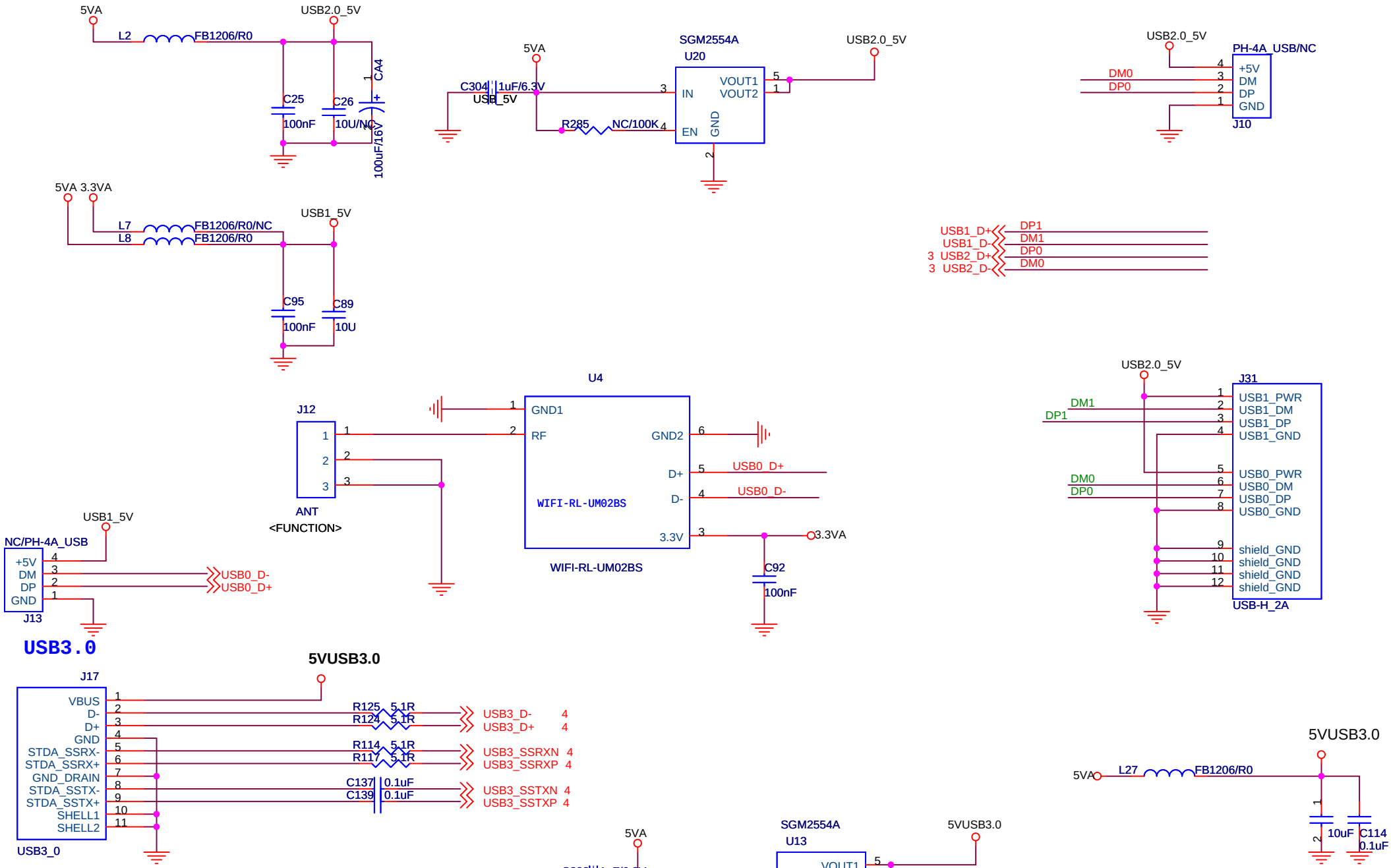

锐显数码 CULTRAVIEW	Title **CV628H-T42**	
Size A4	Document Number **08.USB**	Rev 11
Date: Monday, February 02, 2015	Sheet 2 of 11	

网口用不带灯的封装，料号记录下来

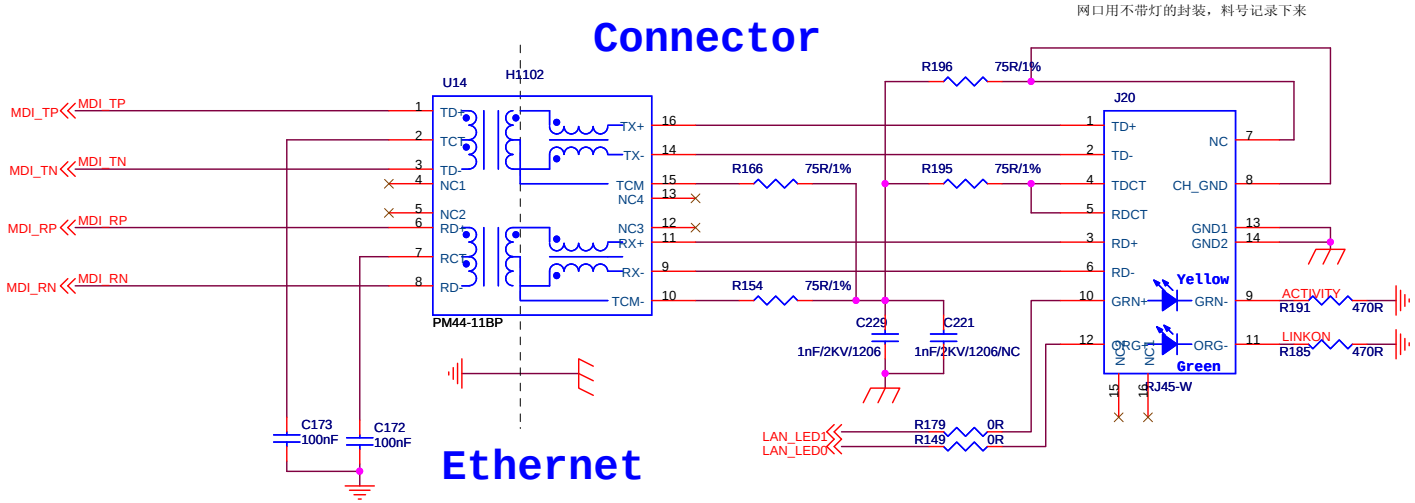

锐显数码 CULTRAVIEW	Title	CV628H-T42
Size B	Document Number 09.Ethernet	Rev 11
Date: Monday, February 02, 2015	Sheet 2 of 11	

HDMI1(ARC)

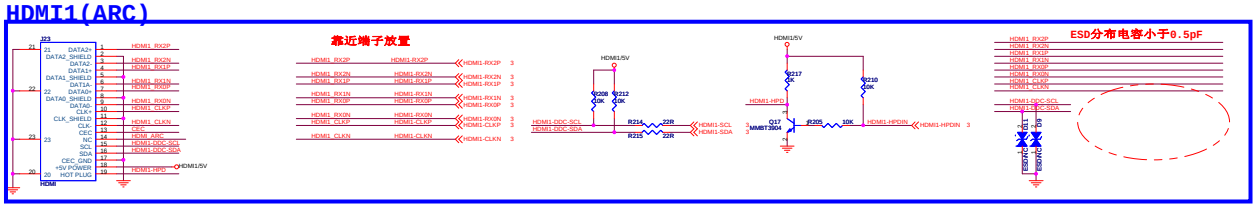

HDMI2

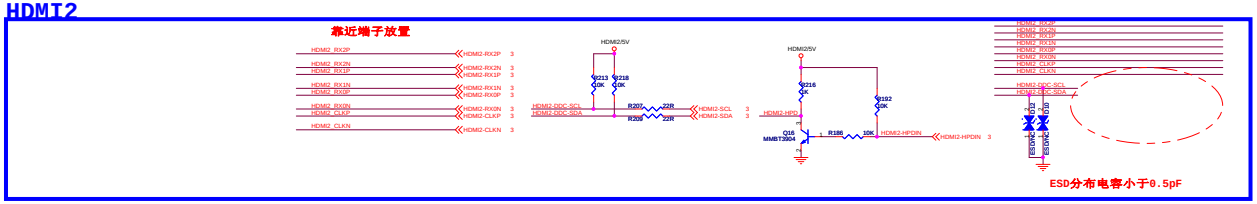

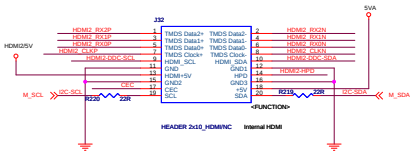

HDMI3(MHL)

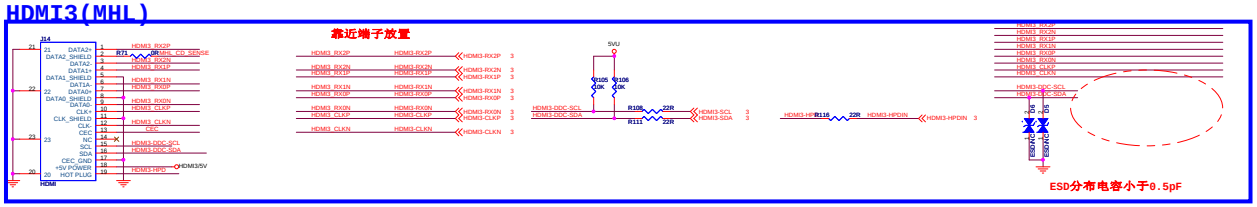

CEC & ARC

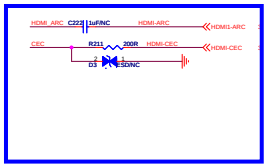

MHL

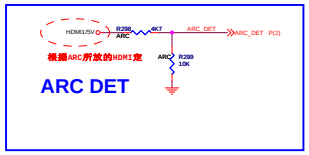

锐显数码 CVD-TEXTEK	Title	CV628H-T42	
Size D	Document Number 10.HDMI		Rev 11
Date: Monday, February 02, 2015	Sheet 2 of 11		

+3.3V SI-TUNER POWER

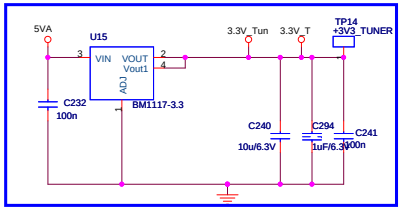

DIF T2

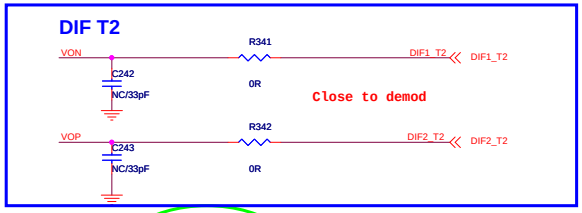

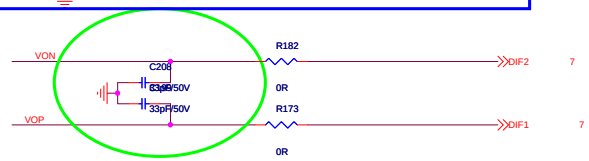

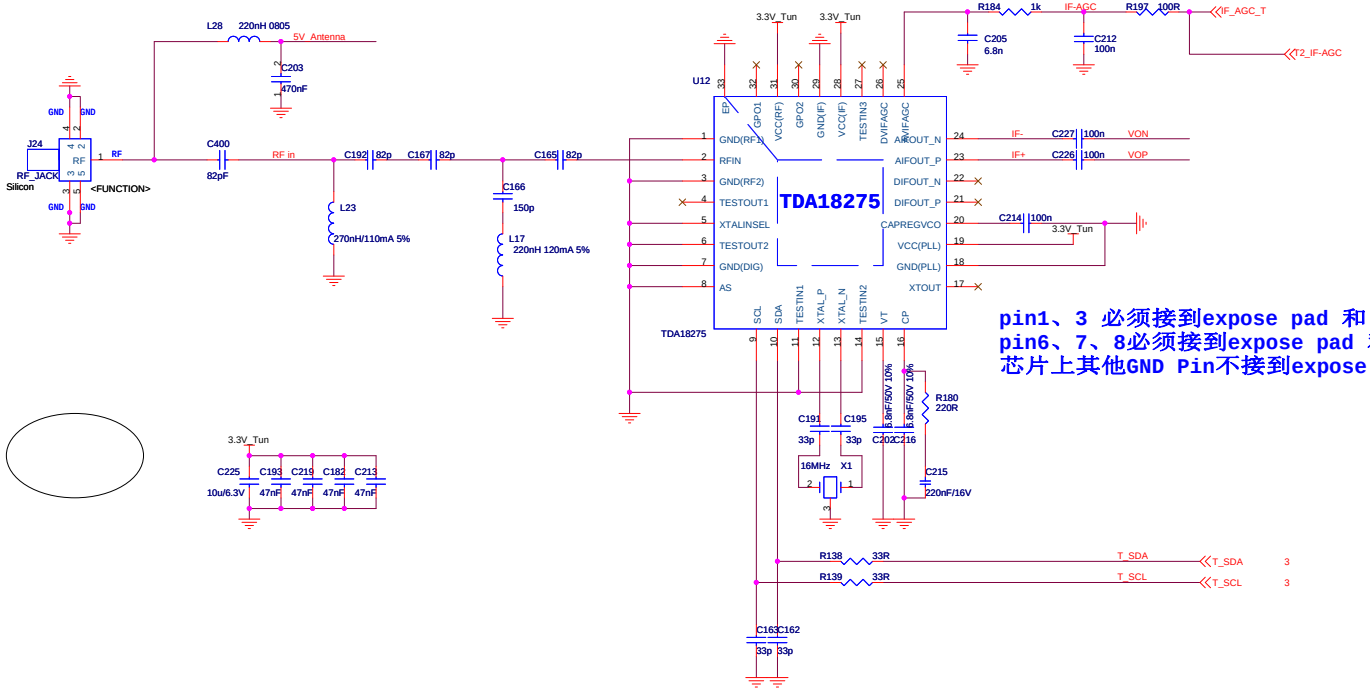

pin1、3 必须接到expose pad 和 芯片外GND
pin6、7、8必须接到expose pad 和 芯片外GND
芯片上其他GND Pin不接到expose pad

Power for Antenna

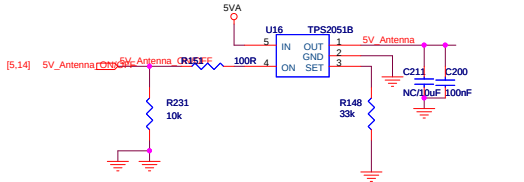

CAN TUNER

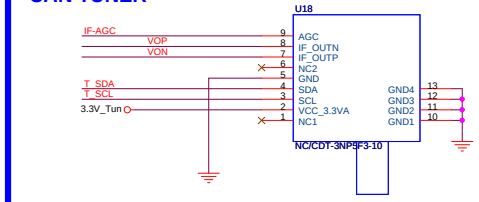

锐显数码 CULTRAVIEW	Title	CV628H-T42	
Size	Document Number Custom 11.TUNER		Rev 11
Date: Monday, February 02, 2015	Sheet 2 of 11		

AUDIO AMP

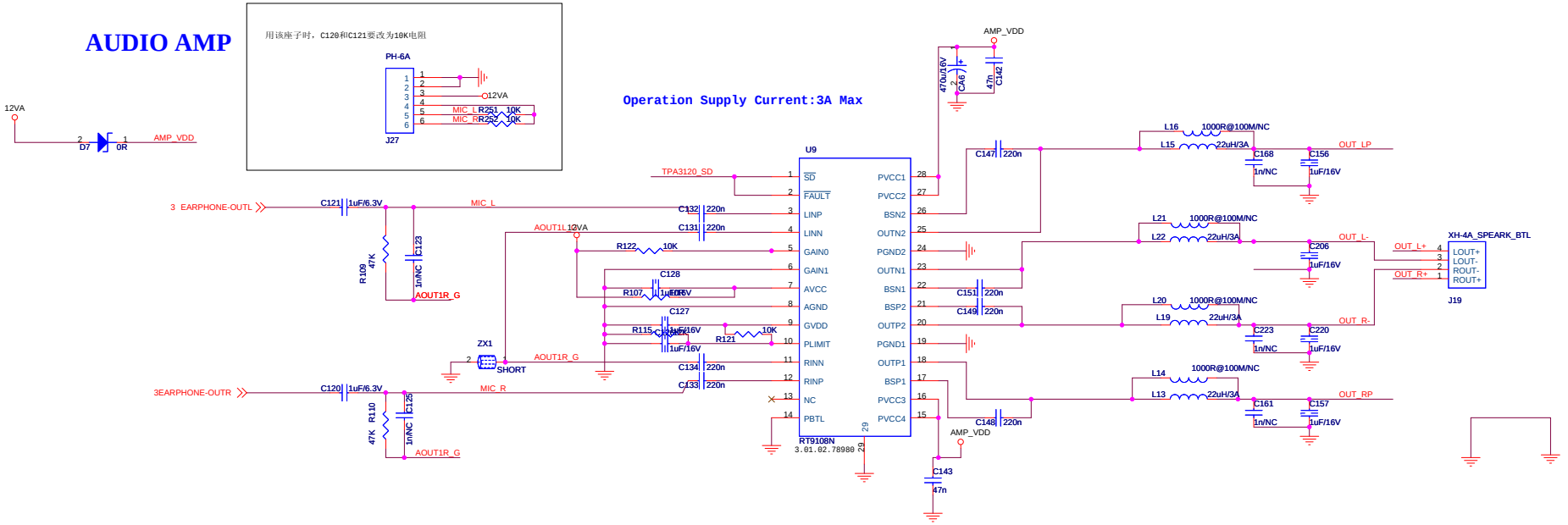

R45的阻值根据主板常用电阻来定，最好在68R以上,小于1K

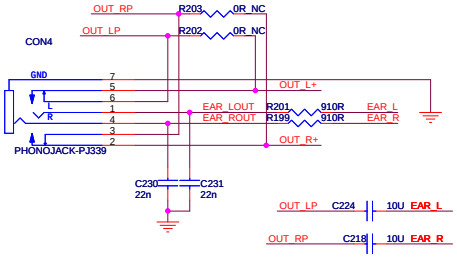

24V功放用CAP SMD 0805 Y5V 10uF -20%～+80% 16V ROHS

锐显数码 CULTRAVIEW	Title CV628H-T42		
Size	Document Number Custom 12.AMP		Rev 11
Date: Monday, February 02, 2015	Sheet 2 of 11		

iNAND FLASH

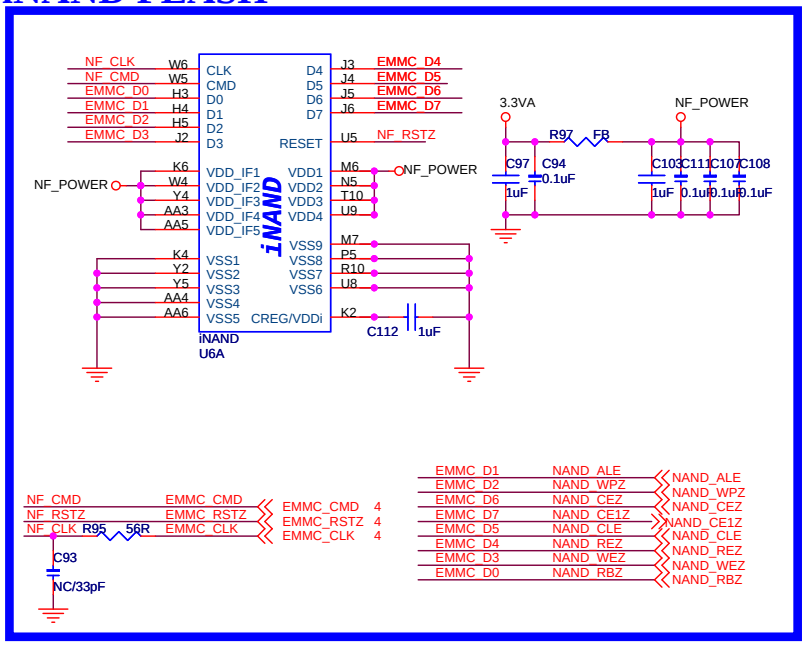

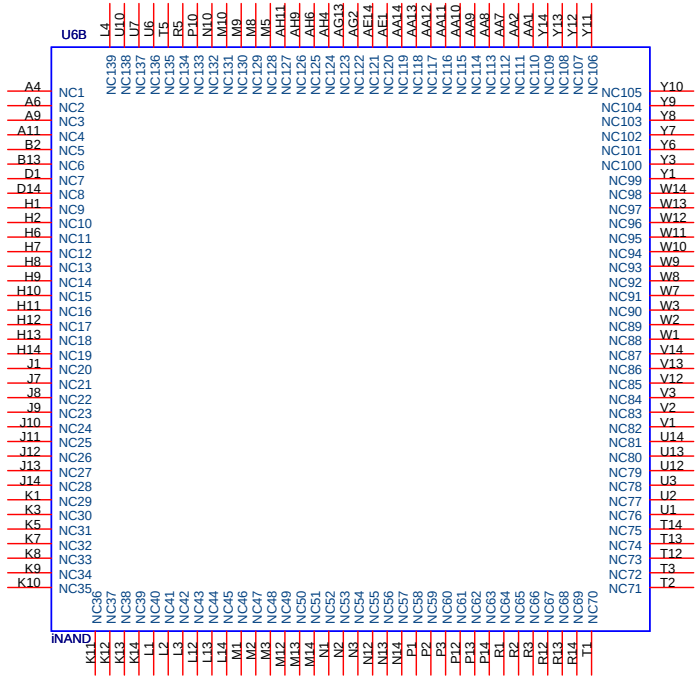

SD/MMC Card Reader

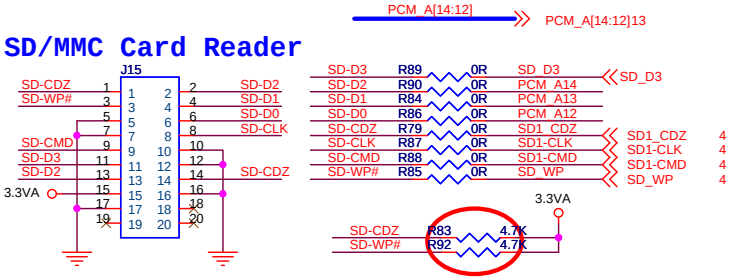

锐显数码 CULTRAVIEW	Title	CV628H-T42
Size B	Document Number 13. NAND	Rev 11
Date: Monday, February 02, 2015	Sheet 2 of 11	

PCMCIA

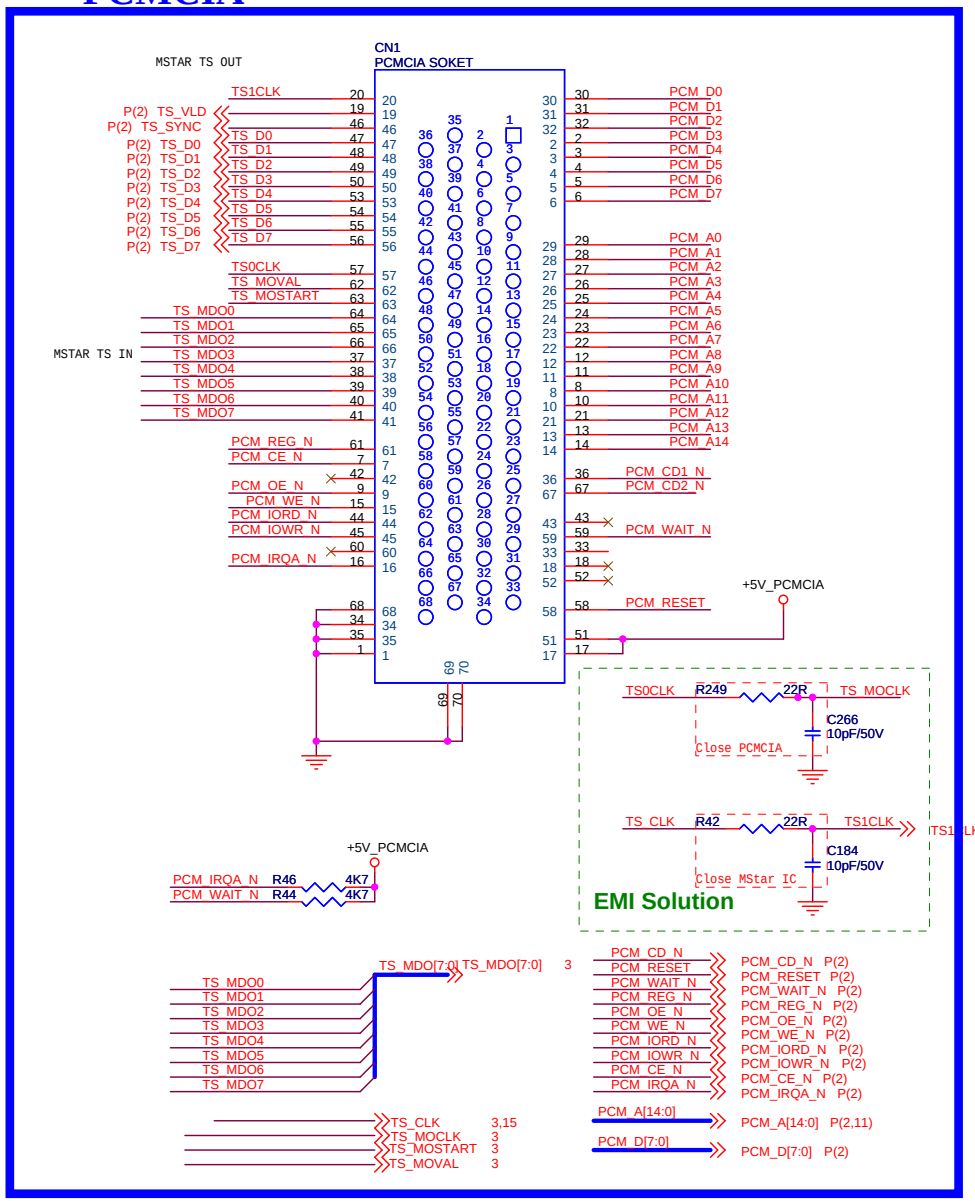

PCMCIA POWER

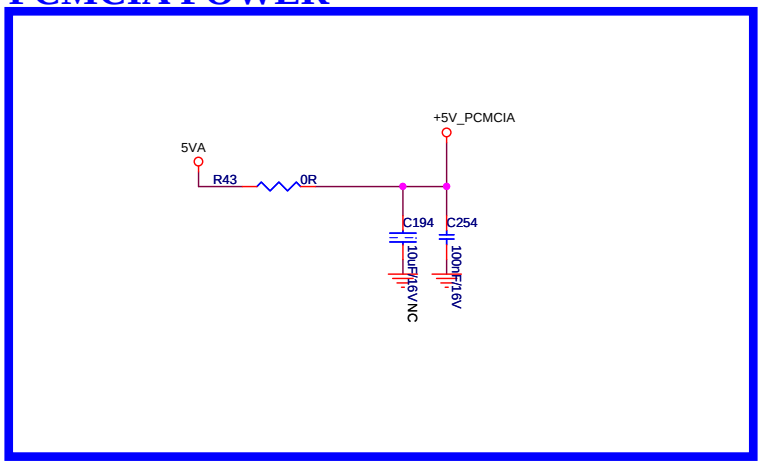

CARD DETECT

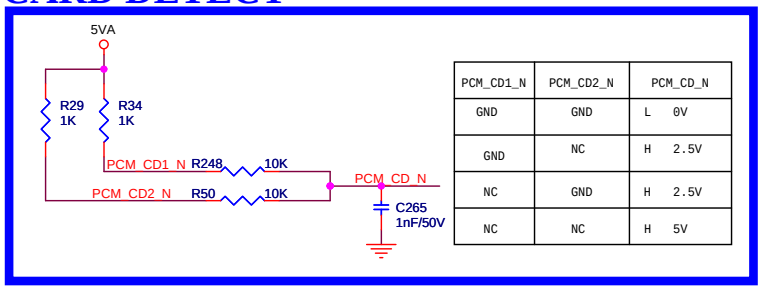

PCM_CD1_N	PCM_CD2_N	PCM_CD_N
GND	GND	L 0V
GND	NC	H 2.5V
NC	GND	H 2.5V
NC	NC	H 5V

锐显数码 CULTRAVIEW	Title	CV628H-T42
Size B	Document Number 13. PCMCIA	Rev 11
Date: Monday, February 02, 2015	Sheet 2 of 11	

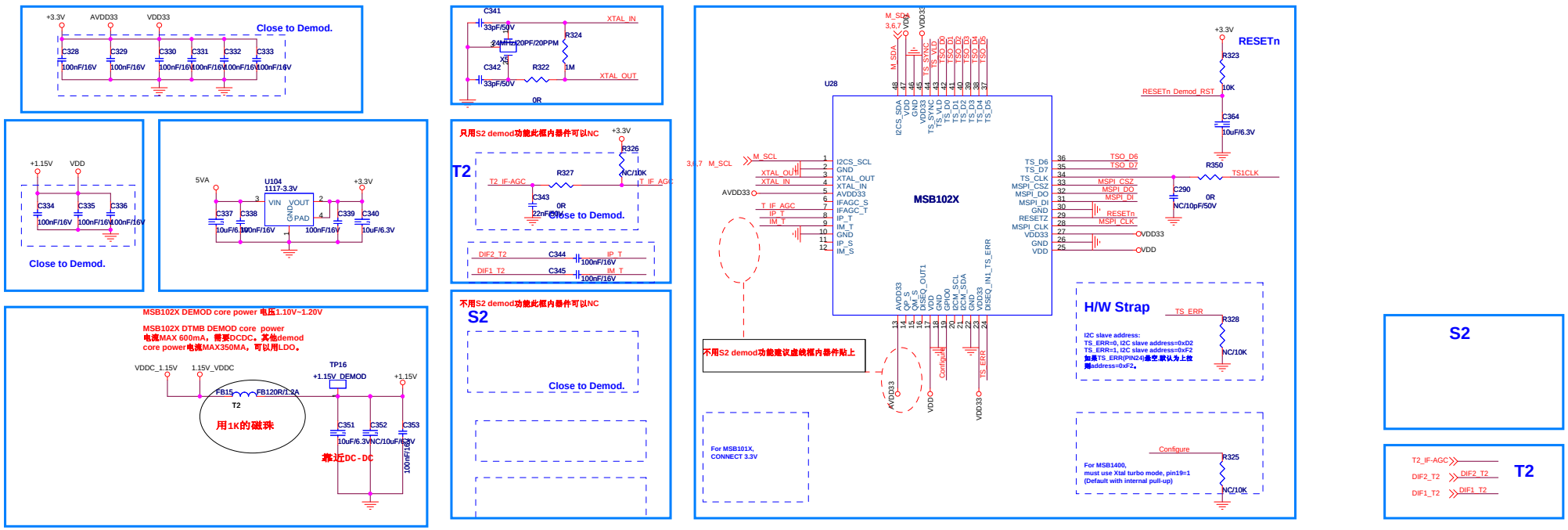

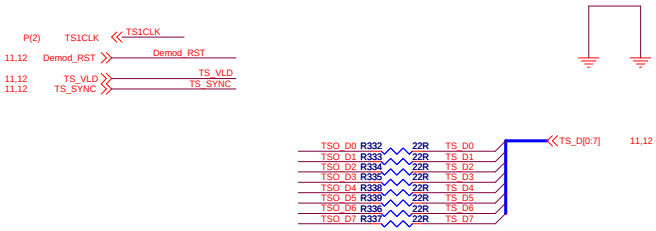

U6 上件说明:
1. 当U4为ISDBT/DTMB/S2 DEMOD chip时,U5 、R25、C32要 NC。
1. 当U4为DVBT/T2 DEMOD chip时,U5 、R25、C32要 上件。

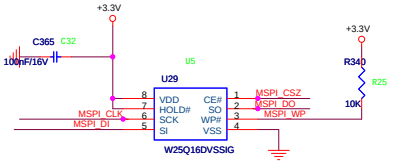

锐显数码 CULTRAVIEW	Title	CV628H-T42	
Size C	Document Number 14. DEMOD		Rev 11
Date: Monday, February 02, 2015	Sheet 2 of 11		

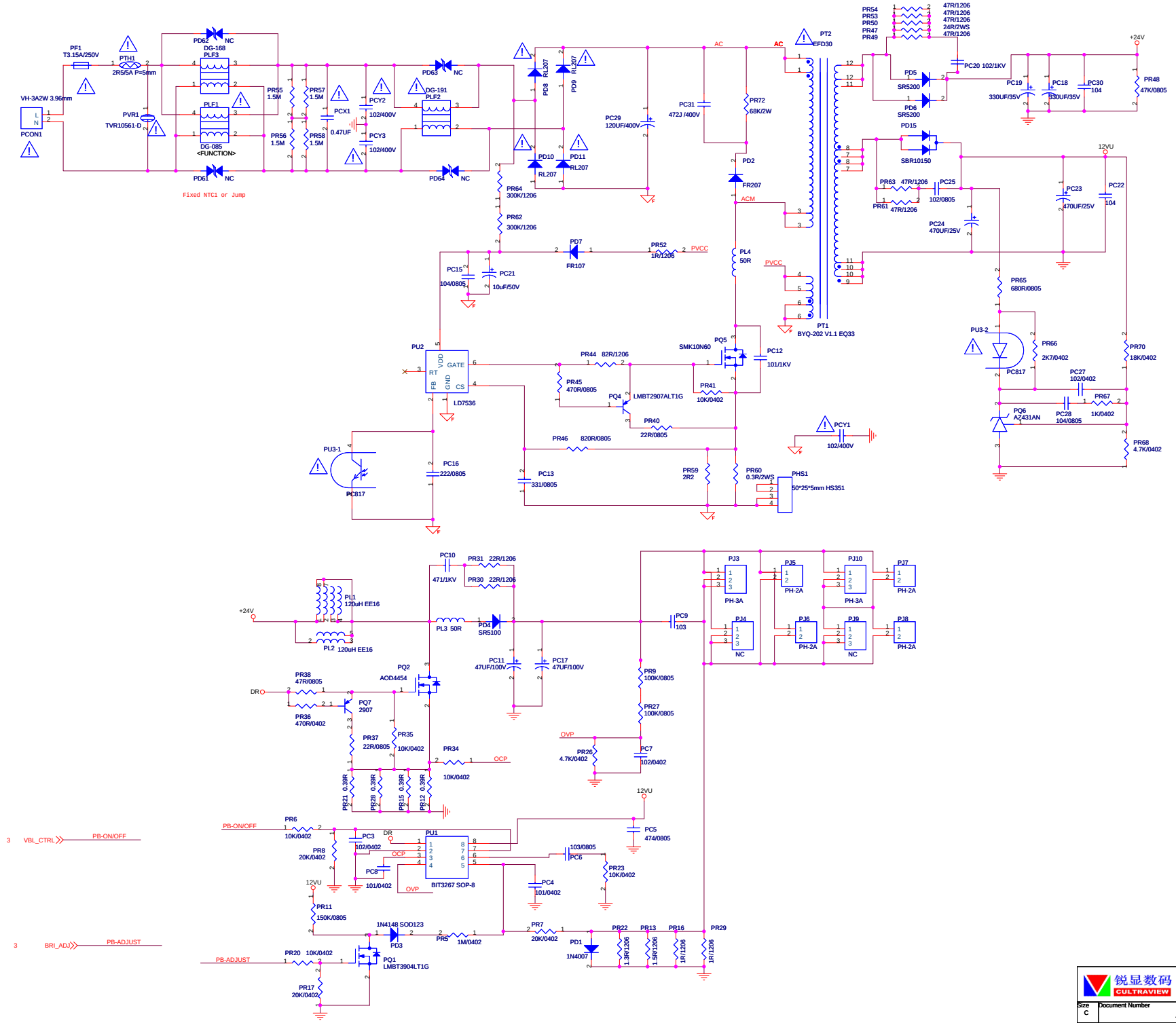

锐显数码 CULTRAVIEW	Title	CV628H-T42
Size C	Document Number	AC_POWER
		Rev 11
Date: Monday, February 02, 2015	Sheet 0 of 16	