Hisense

LCD Television
Service Manual

Chassis：　MTK8222

Product Type：LCD32W58R、LCD32P69R

Ver 1.0

Hisense Electric Co.，Ltd.
May，2009

Contents

Contents - 2 -
Service Manual - 3 -
1. Precautions and notices - 3 -
    1.1 Warning - 4 -
    1.2 Notes - 7 -
2. LCD Panel Spec - 10 -
3. Chassis Layout and Overall Wiring Diagrams - 12 -
    Chassis Layout - 12 -
4. Factory/Service OSD Menu and Adjustment - 13 -
    4.1 To enter the Factory OSD Menu - 13 -
    4.2 Factory OSD Menu - 13 -
5 Software Upgrading - 17 -
    5.1 Get ready for upgrading - 17 -
    5.2 Upgrading with the MtkTool - 19 -
    5.3 Update with USB directly - 23 -
6. Troubleshooting - 25 -
    6.1 Troubleshooting for Remote Control - 25 -
    6.2 Troubleshooting for Function Key - 26 -
    6.3 TV won’t Power On - 27 -
    6.4 Troubleshooting for Audio - 28 -
    6.5 Troubleshooting for TV/VGA/HDMI input - 29 -
    6.6 Troubleshooting for YPbPr input - 30 -
    6.7 Troubleshooting for Video/S-Video input - 31 -
7. Explode View - 32 -
8. Schematic circuit diagram - 32 -

Service Manual

1. Precautions and notices

BEFORE SERVICING THE LCD TV, READ THE SAFETY PRECAUTIONS IN THIS MANUAL.

WHEN REPLACEMENT PARTS ARE REQUIRED, BE SURE TO USE REPLACEMENT PARTS SPECIFIED BY THE MANUFACTURER.

Proper service and repair is important to the safe, reliable operation of all Hisense Electric Co., Ltd Equipment. The service procedures recommended by Hisense and described in this Service Guide are effective methods of performing service operations. Some of these service operations require the use of tools specially designed for the purpose. The special tools should be used when and as recommended.

It is important to note that this manual contains various CAUTIONS and NOTICES which should be carefully read in order to minimize the risk of personal injury to service personnel. The possibility exists that improper service methods may damage the equipment. It is also important to understand that these CAUTIONS and NOTICES ARE NOT EXHAUSTIVE. Hisense could not possibly know, evaluate and advise the service trade of all conceivable ways in which service might be done or of the possible hazardous consequences of each way. Consequently, Hisense has not undertaken any such broad evaluation. Accordingly, a serviceman that uses a service procedure or tools, which are not recommended by Hisense, must first satisfy himself thoroughly that neither his safety nor the safe of the equipment will be jeopardized by the service method selected.

Hereafter throughout this manual, Hisense Electric Co., Ltd will be referred to as Hisense.

1.1 Warning

1.1.1

Critical components having special safety characteristics are identified with a ⚠ by the Ref. No. in the parts list. Use of substitute replacement parts, which do not have the same specified safety characteristics, may create shock, fire, or other hazards.

Under no circumstances should the original design be modified or altered without written permission from Hisense. Hisense assumes no liability, express or implied, arising out of any unauthorized modification of design. Serviceman assumes all liability.

DANGERCAUTION CAUTION

TO ENSURE THE CONTINUED RELIABILITY OF THIS PRODUCT, USE ONLY ORIGINAL MANUFACTURER'S REPLACEMENT PARTS, WHICH ARE LISTED WITH THEIR PART NUMBERS IN THE PARTS LIST SECTION OF THIS SERVICE GUIDE.

1.1.2.

All ICs and many other semiconductors are susceptible to electrostatic discharges (ESD). Careless handling during repair can reduce life drastically. When repairing, make sure that you are connected with the same potential as the mass of the set by a wristband with resistance. Keep components and tools also at this same potential.

1. Never replace modules or other components while the unit is switched on.

2. When making settings, use plastic rather than metal tools. This will prevent any short circuits and the danger of a circuit becoming unstable.

1.1.3

To prevent electrical shock, do not use this polarized ac plug with an extension cord, receptacle, or the outlet unless the blades can be fully inserted to prevent blade exposure. To prevent electrical shock, match wide blade or plug to wide slot, fully insert.

1.1.4

When replacement parts are required, be sure to use replacement parts specified by the manufacturer or have the same characteristics as the original part. Unauthorized substitutions may result in fire, electric shock, or other hazards.

1.1.5

Safety regulations require that after a repair the set must be returned in its original condition. In particular attention should be paid to the following points.

-Note: The wire trees should be routed correctly and fixed with the mounted cable clamps.

-The insulation of the mains lead should be checked for external damage.

1.1.6

(1) Do not touch Signal and Power Connector while this product operates. Do not

touch EMI ground part and Heat Sink of Film Filter.

(2) Do not supply a voltage higher than that specified to this product. This may damage the product and may cause a fire.

(3) Do not use this product in locations where the humidity is extremely high, where it may be splashed with water, or where flammable materials surround it. Do not install or use the product in a location that does no satisfy the specified environmental conditions. This may damage the product and may cause a fire.

(4) If a foreign substance (such as water, metal, or liquid) gets inside the panel module, immediately turn off the power. Continuing to use the product may cause fire or electric shock.

(5) If the product emits smoke, and abnormal smell, or makes an abnormal sound, immediately turn off the power. Continuing to use the product, it may cause fire or electric shock.

(6) Do not disconnect or connect the connector while power to the product is on. It takes some time for the voltage to drop to a sufficiently low level after the power has been turned off. Confirm that the voltage has dropped to a safe level before disconnecting or connecting the connector.

(7) Do not pull out or insert the power cable from/to an outlet with wet hands. It may cause electric shock.

(8) Do not damage or modify the power cable. It may cause fire or electric shock.

(9) If the power cable is damaged, or if the connector is loose, do not use the product:

otherwise, this can lead to fire or electric shock.

(10) If the power connector or the connector of the power cable becomes dirty or dusty, wipe it with a dry cloth. Otherwise, this can lead to fire.

(11) Use only with the cart, stand, tripod, bracket, or table specified by the manufacturer, or sold with the apparatus. When a cart is used, use caution when moving the cart/apparatus combination to avoid injury from tip-over.

1.2 Notes

Notes on Safe Handling of the LCD panel and during service

The work procedures shown with the Note indication are important for ensuring the safety of the product and the servicing work. Be sure to follow these instructions.

- Before starting the work, secure a sufficient working space.
- At all times other than when adjusting and checking the product, be sure to turn OFF the POWER Button and disconnect the power cable from the power source of the TV during servicing.
- To prevent electric shock and breakage of PC board, start the servicing work at least 30 seconds after the main power has been turned off. Especially when installing and removing the power board, start servicing at least 2 minutes after the main power has been turned off.
- While the main power is on, do not touch any parts or circuits other than the ones specified. If any connection other than the one specified is made between the measuring

equipment and the high voltage power supply block, it can result in electric shock or activation of the leakage-detection circuit breaker.

- When installing the LCD module in, and removing it from the packing carton, be sure to have at least two persons perform the work.
- When the surface of the panel comes into contact with the cushioning materials, be sure to confirm that there is no foreign matter on top of the cushioning materials before the surface of the panel comes into contact with the cushioning materials. Failure to observe this precaution may result in, the surface of the panel being scratched by foreign matter.
- When handling the circuit board, be sure to remove static electricity from your body before handling the circuit board.
- Be sure to handle the circuit board by holding the large parts as the heat sink or transformer. Failure to observe this precaution may result in the occurrence of an abnormality in the soldered areas.
- Do not stack the circuit boards. Failure to observe this precaution may result in problems resulting from scratches on the parts, the deformation of parts, and short-circuits due to residual electric charge.
- Routing of the wires and fixing them in position must be done in accordance with the original routing and fixing configuration when servicing is completed. All the wires are routed far away from the areas that become hot (such as the heat sink). These wires are fixed in position with the wire clamps so that the wires do not move, thereby ensuring

that they are not damaged and their materials do not deteriorate over long periods of time. Therefore, route the cables and fix the cables to the original position and states using the wire clamps.

- Perform a safety check when servicing is completed. Verify that the peripherals of the serviced points have not undergone any deterioration during servicing. Also verify that the screws, parts and cables removed for servicing purposes have all been returned to their proper locations in accordance with the original setup.

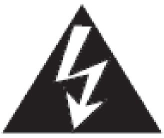

The lightning flash with arrowhead symbol, within an equilateral triangle is intended to alert the user to the presence of uninsulated dangerous voltage within the products enclosure that may be of sufficient magnitude to constitute a risk of electric shock.

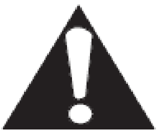

The exclamation point within an equilateral triangle is intended to alert the user to the presence of important operating and maintenance (servicing) instructions in the literature accompanying the set.

2. LCD Panel Spec

LCD32P69R Panel Model: T315XW02VS\JK\ROH
LCD32W58R Panel Model: V315B3-LN1\HS\BL(P03)\ROH

2.1 Panel: T315XW02VS\JK\ROH SN: 1057962

2.1.1General Description

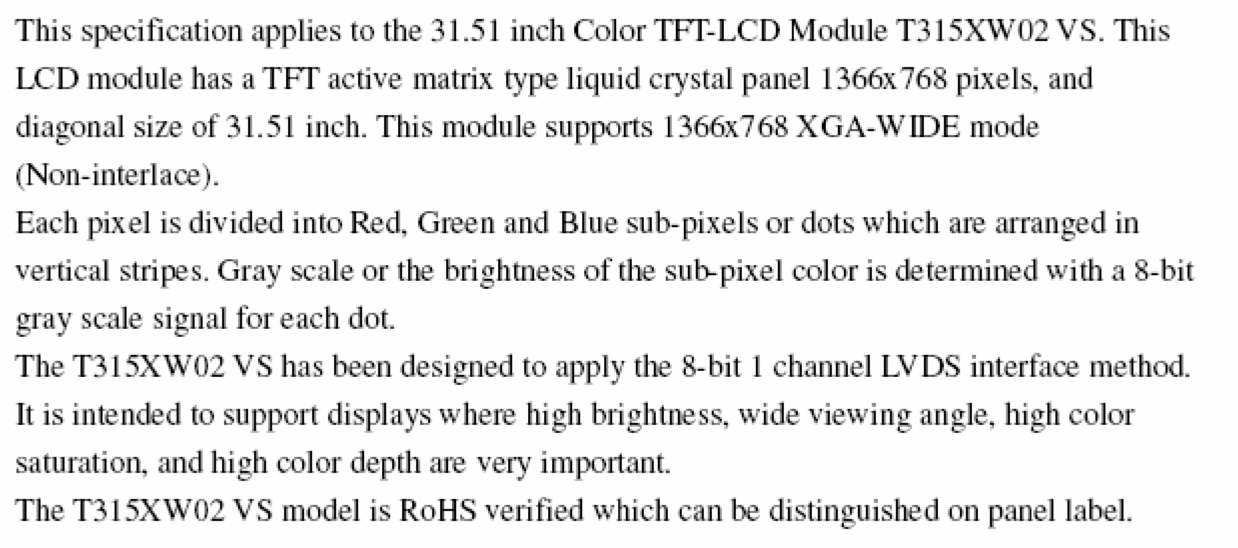

This specification applies to the 31.51 inch Color TFT-LCD Module T315XW02 VS. This LCD module has a TFT active matrix type liquid crystal panel 1366x768 pixels, and diagonal size of 31.51 inch. This module supports 1366x768 XGA-WIDE mode (Non-interlace).

Each pixel is divided into Red, Green and Blue sub-pixels or dots which are arranged in vertical stripes. Gray scale or the brightness of the sub-pixel color is determined with a 8-bit gray scale signal for each dot.

The T315XW02 VS has been designed to apply the 8-bit 1 channel LVDS interface method. It is intended to support displays where high brightness, wide viewing angle, high color saturation, and high color depth are very important.

The T315XW02 VS model is RoHS verified which can be distinguished on panel label.

2.1.2 General Features

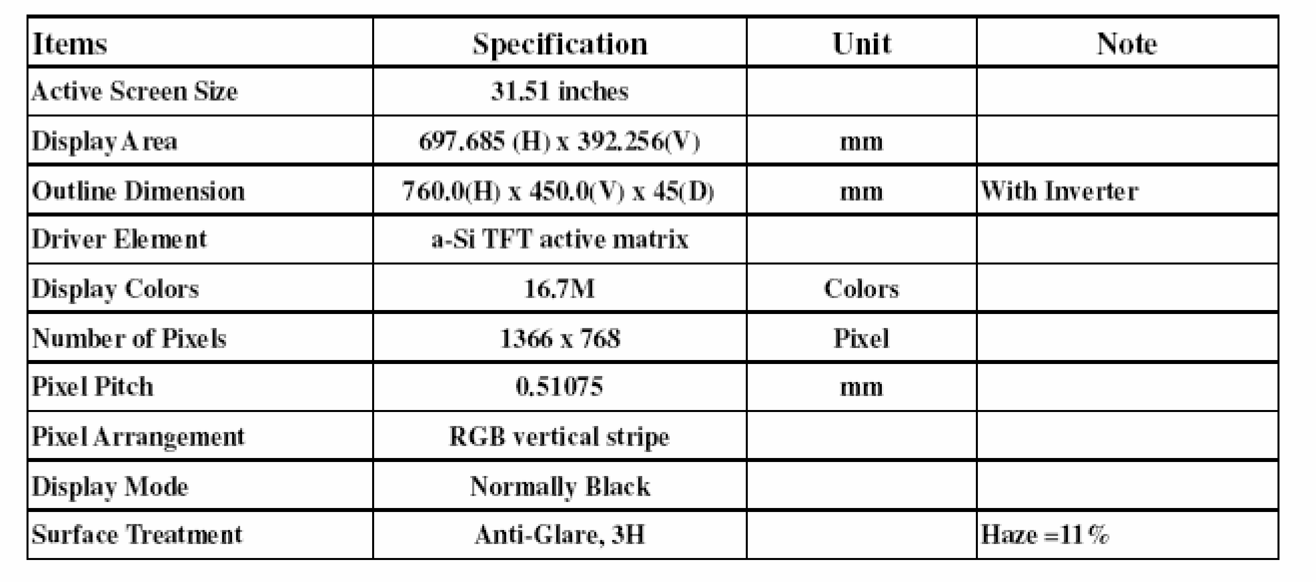

Items	Specification	Unit	Note
Active Screen Size	31.51 inches		
Display Area	697.685 (H) x 392.256(V)	mm	
Outline Dimension	760.0(H) x 450.0(V) x 45(D)	mm	With Inverter
Driver Element	a-Si TFT active matrix		
Display Colors	16.7M	Colors	
Number of Pixels	1366 x 768	Pixel	
Pixel Pitch	0.51075	mm	
Pixel Arrangement	RGB vertical stripe		
Display Mode	Normally Black		
Surface Treatment	Anti-Glare, 3H		Haze =11%

2.2 Panel：V315B3-LN1\HS\BL(P03)\ROH   SN：120765

2.2.1 General Description

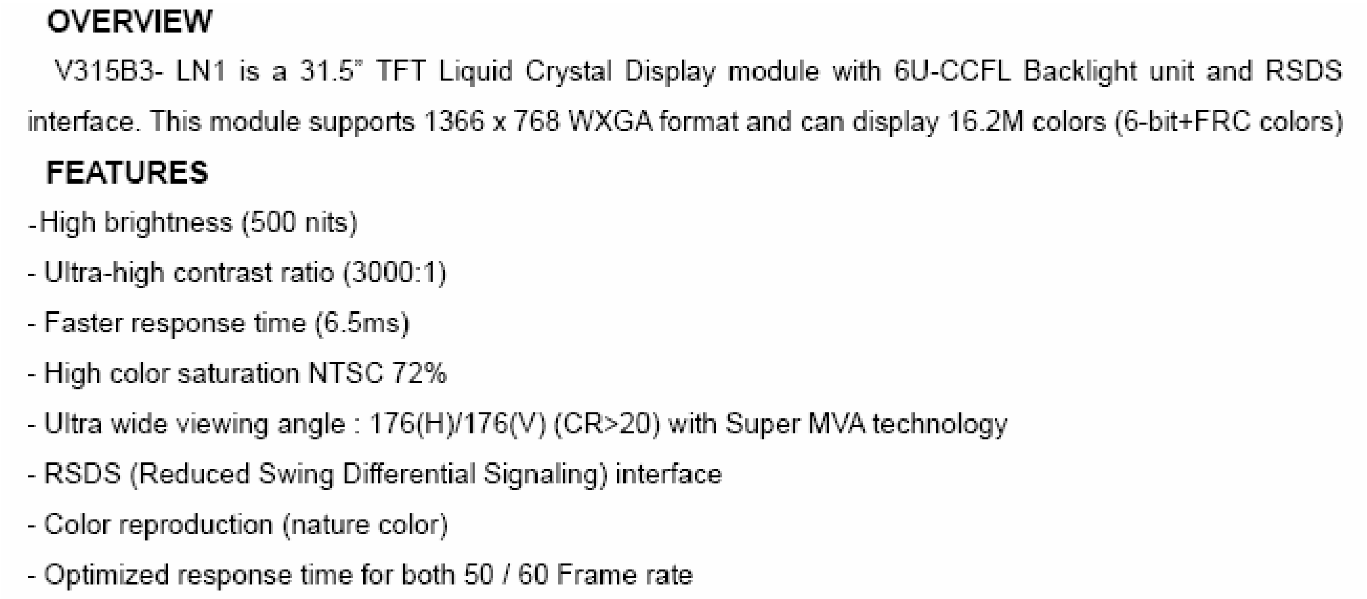

OVERVIEW

V315B3- LN1 is a 31.5" TFT Liquid Crystal Display module with 6U-CCFL Backlight unit and RSDS interface. This module supports 1366 x 768 WXGA format and can display 16.2M colors (6-bit+FRC colors)

FEATURES

-High brightness (500 nits)

- Ultra-high contrast ratio (3000:1)
- Faster response time (6.5ms)
- High color saturation NTSC 72%
- Ultra wide viewing angle : 176(H)/176(V) (CR>20) with Super MVA technology
- RSDS (Reduced Swing Differential Signaling) interface
- Color reproduction (nature color)
- Optimized response time for both 50 / 60 Frame rate

2.2.2 General Features

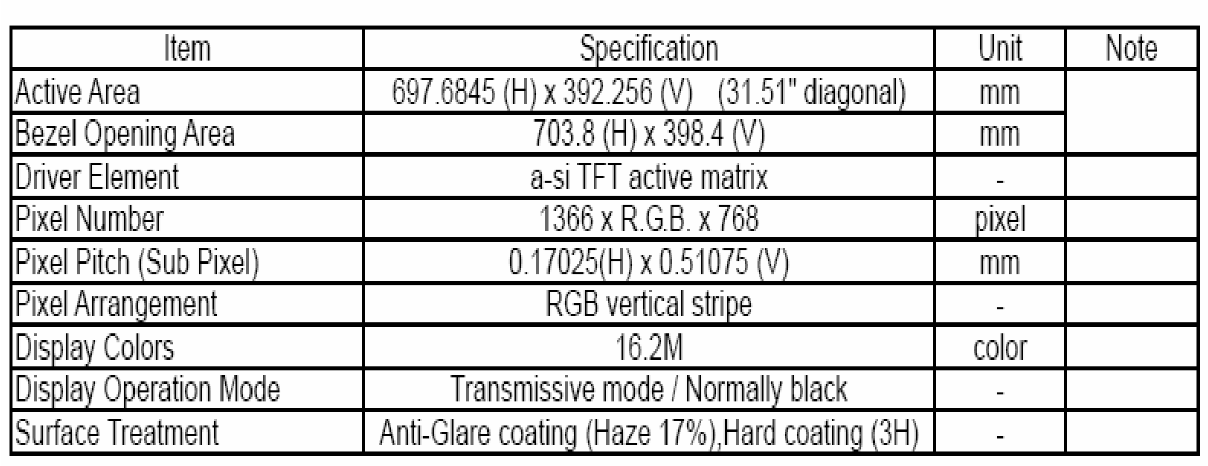

Item	Specification	Unit	Note
Active Area	697.6845 (H) x 392.256 (V) (31.51" diagonal)	mm	
Bezel Opening Area	703.8 (H) x 398.4 (V)	mm	
Driver Element	a-si TFT active matrix	-	
Pixel Number	1366 x R.G.B. x 768	pixel	
Pixel Pitch (Sub Pixel)	0.17025(H) x 0.51075 (V)	mm	
Pixel Arrangement	RGB vertical stripe	-	
Display Colors	16.2M	color	
Display Operation Mode	Transmissive mode / Normally black	-	
Surface Treatment	Anti-Glare coating (Haze 17%),Hard coating (3H)	-	

Appendix

Specification

		1366×768	1366×768
		160W	160W
		6W+6W	6W+6W

Power supply		Refer to rating label
Receiving systems	RF	PAL、SECAM，D/K、B/G、I、L、L’
	AV	PAL,SECAM,NTSC
Channel range		VHF/UHF：48. 25-863. 25MHz
Environmental conditions		Temperature 5°C~ 35°C Humidity:20%-80% RH, Atmospheric pressure: 86kPa-106kPa
Component Input		480I、480P、576I、576P 720P/50Hz、720P/60Hz、1080I/50Hz、1080I/60Hz 1080P/50Hz、1080P/60Hz
VGA Input		VGA（640×480 60Hz）、 SVGA（ 800×600 60Hz） XGA （1024×768 60Hz）
HDMI Input		RGB/60Hz （ 640×480、800×600、1024×768） YUV/50Hz （ 576P、720P、1080I、1080P） YUV/60Hz （480I、480P、720P、1080I、1080P ）
SCART Input		CVBS、RGB、Y/C

3. Chassis Layout and Overall Wiring Diagrams

Chassis Layout

LCD32W58R

No	Description	Part No.	Type/Model	PCB/ Model
（1）	Main Board	120066	RSAG2.908.1497-2\ROH	RSAG7.820.1637\VER.E\ROH
（2）	Power Board	119904	RSAG2.908.1400- 1\ROH	RSAG7.820.1459\VER.F\ROH
（3）	Keypad PCA	113354	RSAG2.908.1088\ROH	RSAG7.820.1101\VER.B\ROH
（4）	IR Board	116295	RSAG2.908.1260-2\ROH	RSAG7.820.1337\VER.B\ROH
（5）	TCON Board	117950	RSAG2.908.1340-1TP\ROH	RSAG7.820.1453\TP\VER.BROH

LCD32P69R

No	Description	Part No.	Type/Model	PCB/ Model
（1）	Main Board	120580	RSAG2.908.1497-5\ROH	RSAG7.820.1637\VER.E\ROH
（2）	Power Board	114538	RSAG2.908.1185-2\ROH	RSAG7.820.1032\VER.H\ROH
（3）	Keypad PCA	113354	RSAG2.908.1088\ROH	RSAG7.820.1101\VER.B\ROH
（4）	IR Board	113523	RSAG2.908.1029-2\ROH	RSAG7.820.996\VER.C\ROH
（5）	Led Board	117467	RSAG2.908.1279-1\ROH	RSAG7.820.1343\VER.D\ROH

4. Factory/Service OSD Menu and Adjustment

4.1 To enter the Factory OSD Menu

a.. With user's RC

1. Power TV On
2. Press Menu button and call up User OSD Menu
3. Select Audio-> Balance
4. Enter 0->5->3 ->2 in sequence.
   Note: If necessary, re-do number keys.
5. Factory OSD appears.
6. Press Menu again and leave factory OSD.

b. With user's RC

7. Power TV On
8. Press Menu button and call up User OSD Menu
9. Select Audio-> Balance
10. Enter 0->5->3 ->2 in sequence.
    Note: If necessary, re-do number keys.
11. Factory OSD appears.
12. Press Menu again and leave factory OSD.

4.2 Factory OSD Menu

4.2.1 White Balance

Note: Different source has different WB values. Before adjusting, please change to desired source.

1. Auto Color

For VGA and Component Video sources, WB values must be adjusted. And at others signal sources, the "auto colour "does not work.

Before adjusting, prepare the signal instruments such as DVD or K-8256 first, and find the video picture with gray and color bars. Then please change to desired source.

	source	Timing	Pattern	Notes
1	ADC VGA	1024*768	gray-3color	For VGA source
2	ADC HDTV	720P	gray-3color	For Component Video

Notes:

a、Press “M” button and enter factory mode.

b、Press “Menu” button and enter factory OSD menu.

c、Select the item “Auto Color”.

d、Press VOL+ button to auto color.

e、Close the OSD menu after 5 seconds.

3.2.2 Factory Option

Item 0	Item 1	Note
White Balance	R DRV	Red Driver adjust
	G DRV	Green Driver adjust
	B DRV	Blue Driver adjust
	R CUT	Red Cut adjust
	G CUT	Green Cut adjust
	B CUT	Blue Cut adjust
Note: Before adjusting, please change to desired source. Different source has different WB values.		
Factory RESET	Zhong Shi	Qingdao Jiangxi Road factory
	Huang Dao	Huangdao Industrial Park
	Gui Yang	Gui Yang Industrial Park
	Liao Ning	Liao Ning Industrial Park
	Hungary	Hisense Hungary
	Australia	Hisense Australia
	France	Hisense France
	Clean Protected	Clean data except WB data and Auto Color data
	Clean All	Clean all data
Auto Color	For VGA and Component Video sources, WB values must be adjusted	And at others signal sources, the “auto colour “does not work.
Color Temp	Color	Standard
	R Offset	
	G Offset	
	B Offset	
Picture Mode	Brightness Min	Min Brightness
	Brightness Mid	Mid Brightness
	Brightness Max	Max Brightness
	Contrast Min	Min Contrast
	Contrast Mid	Mid Contrast
	Contrast Max	Max Contrast s
	Saturation Min	Min Saturation
	Saturation Mid	Mid Saturation
	Saturation Max	Max Saturation

Factory Option	OSD	English
	Logo Option	Devant
	To FAC	M
MODE "M" is only used for factory production.		
SW Version	Version:	Current Software version
	Panel Info:	The date of current version
	Flash:	

Note: The factory menu date varies according to different sources. Incase changing the factory data by error, you can choose to "Clean Protected", by which you can resume the default value.

To clear the EEPROM:

a. Select the item "Clean All".
b. Press VOL+ button to clear the EEPROM data.
c. Close the OSD menu after 5 seconds.
d. Restart the TV.

4.3 Designer Menu

Item 0	**Item 1**	**Item 2**	**Note**
Designer Menu	Picture Mode	SOURCE	The current program source
		Brightness Brightness	Brightness of VIVID mode
		Brightness Contrast	Contrast of VIVID mode
		Brightness Saturation	Saturation of VIVID mode
		STD Brightness	Brightness of STD mode
		STD Contrast	Contrast of STD mode
		STD Saturation	Saturation of STD mode
		Soft Brightness	Brightness of Movie mode
		Soft Contrast	Contrast of Movie mode
		Soft Saturation	Saturation of Movie mode
	Audio Set	Volume Min	When value is 1 Think about the Audio out power

			before adjusting
		Volume 25	When value is 25 Think about the Audio out power before adjusting
		Volume Mid	When value is 50 Think about the Audio out power before adjusting
		Volume 75	When value is 75 Think about the Audio out power before adjusting
		Volume Max	When value is 100 Think about the Audio out power before adjusting
	Audio Mode	Audio Mode	Standard 、 user 、 Music 、 Speech, Music
		120HZ	Different frequencies for different Audio Mode
		500HZ	
		1.5kHZ	
		5kHZ	
		10kHZ	
	Backlight co	PVM 0-350	
		PVM 350-500	
		PVM500-1000	
		PVM 1000-10000	
		PVM 10000-	
	EMI	0	
	Power Mode	Last station	

The above “Factory/Service OSD Menu” are reference only, please refer to the actual units to determine the appearances.

5 Software Upgrading

The first upgrading method:

The software is upgraded by a burning toll-MtkTool, which can burn the program file *.bin to the main board of the unit.

5.1 Get ready for upgrading

5.1.1 Install the driver

Double click the icon MTKtools2.44.04+cp210xDriver.rar , install the driver.

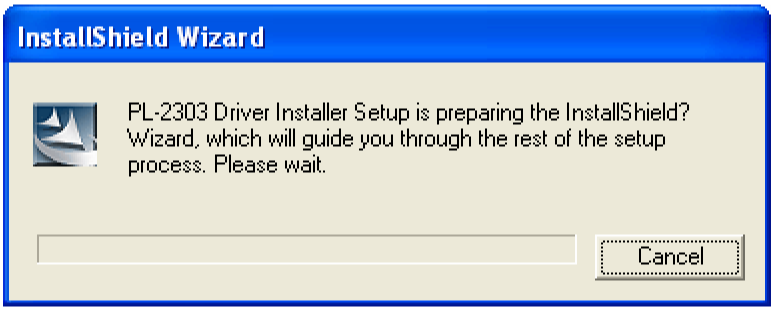

InstallShield Wizard

PL-2303 Driver Installer Setup is preparing the InstallShield? Wizard, which will guide you through the rest of the setup process. Please wait.

Select the default value, the driver will be installed step by step.

5.1.2 Hardware connecting

Connect the unit to your pc with a USB-to-serial port cable. USB port connects to your pc, and serial port to the TV's RS232 port.

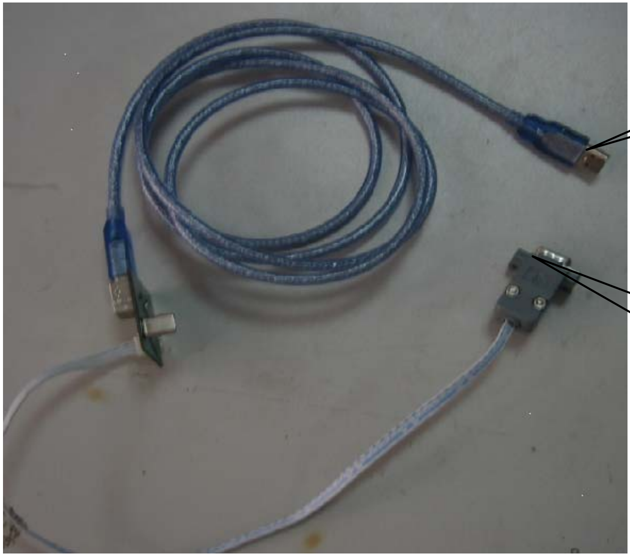

USB connector: to PC.

Serial connector: to TV's RS232 port.

For the first connecting, the pc will recognize and automatically install the USB device. The process is just like the installation of a mini disk, see the following picture.

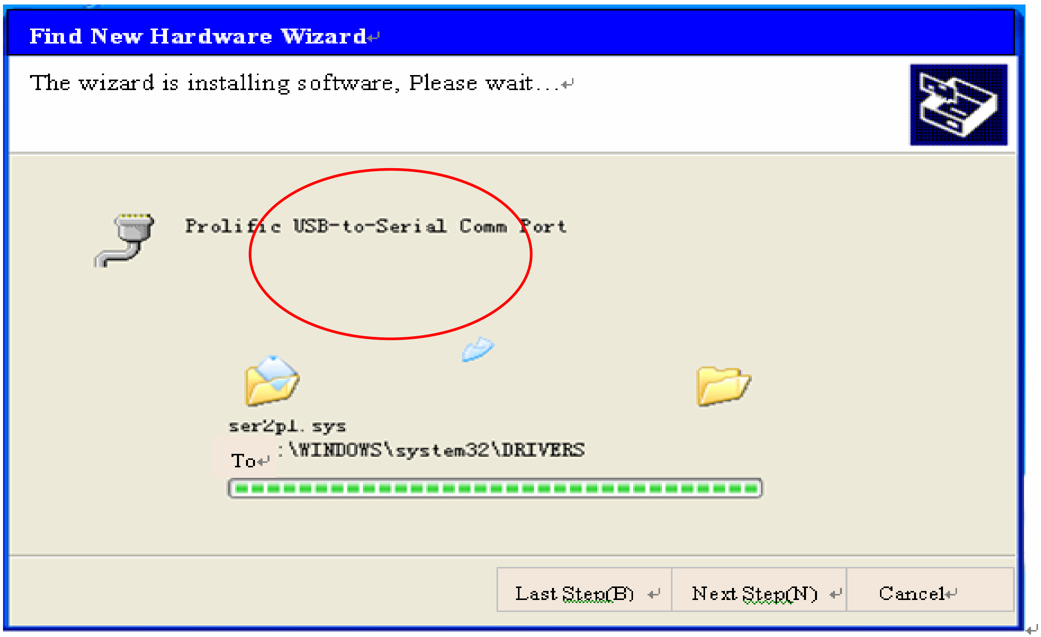

Find New Hardware Wizard

The wizard is installing software, Please wait…

Prolific USB-to-Serial Comm Port

ser2pl.sys

To :\WINDOWS\system32\DRIVERS

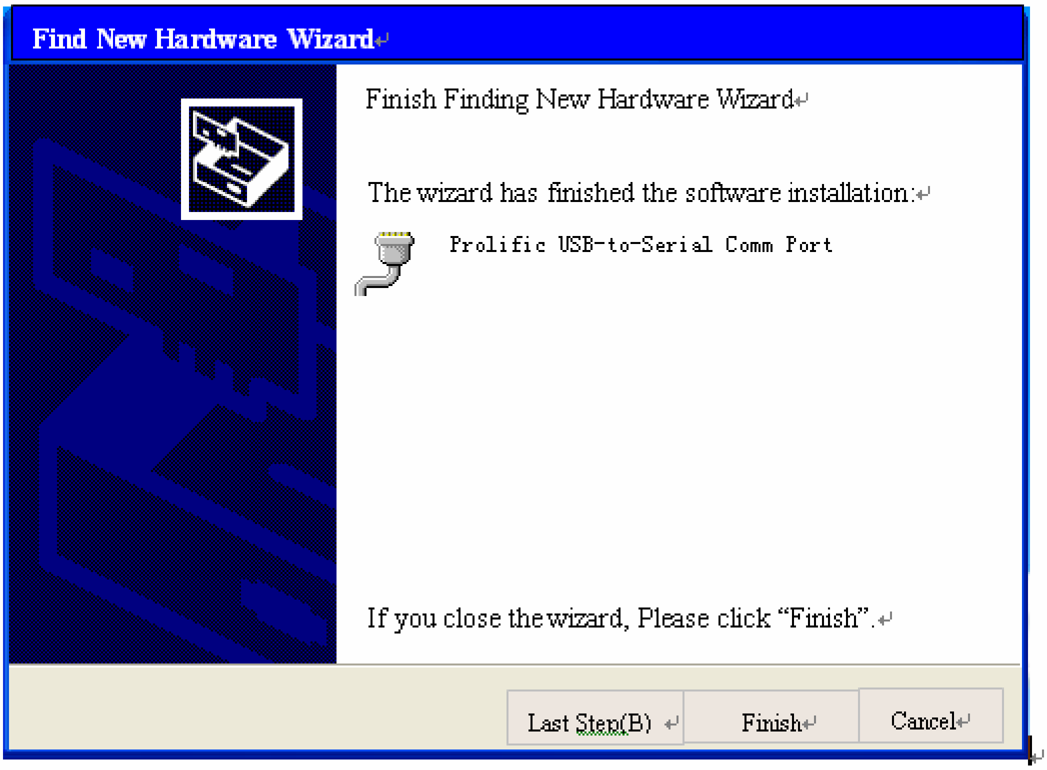

Find New Hardware Wizard

Finish Finding New Hardware Wizard

The wizard has finished the software installation:

Prolific USB-to-Serial Comm Port

If you close the wizard, Please click “Finish”.

5.2 Upgrading with the MtkTool

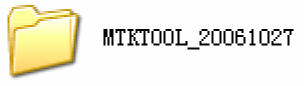
MTKTOOL_20061027

MTKtool is a green program needing no installation. It is saved in the folder . There are five folders/files in this folder altergether.

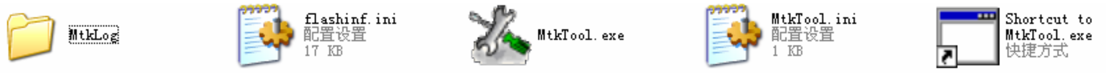
MtkLog
flashinf.ini
配置设置
17 KB
MtkTool.exe
MtkTool.ini
配置设置
1 KB
Shortcut to
MtkTool.exe
快捷方式

The MtkTool using log is restored in the MtkLog folder. It records the running time and date whenever the tool is used. The log will be a txt file named by the date and time.

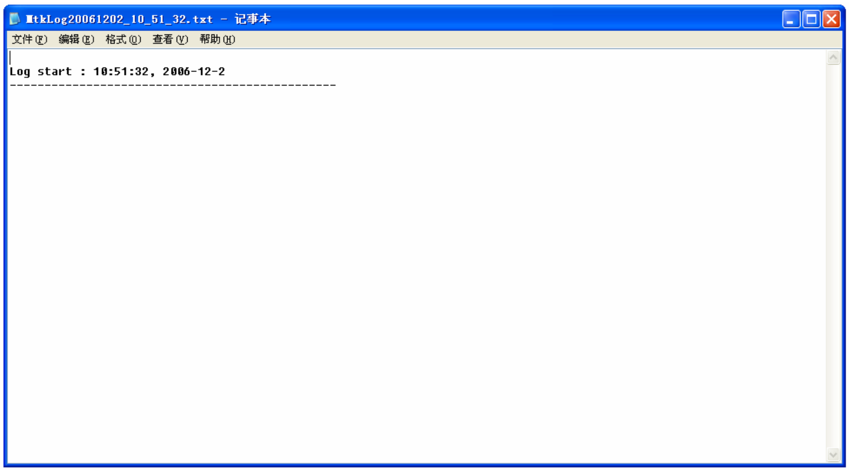
MtkLog20061202_10_51_32.txt - 记事本
文件(F) 编辑(E) 格式(O) 查看(V) 帮助(H)

```
Log start : 10:51:32, 2006-12-2
-----------------------------------------------
```

MtkTool.exe

After connecting the TV with your PC, double click icon, open the MtkTool.

If following error appears, it means the related port is not be set properly.

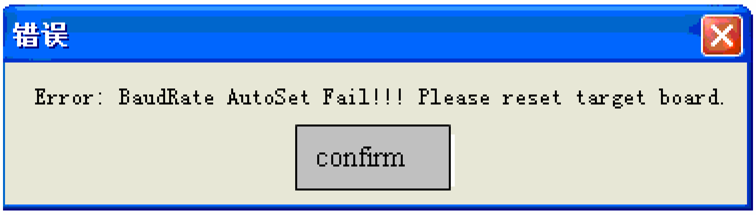

Error: BaudRate AutoSet Fail!!! Please reset target board.

Ignore these errors, click “Confirm” and enter the MtkTool main interface, see the following picture.

Flash chip model

Please refer to follow steps to update the software:

1—Select mode of Flash chip to MT8226 as the below picture.

2—Refer to the next page instruction to select the communicate port.

3—Press the icon beside the baud rate and make sure it is green as the below picture.
4—Set the flash baud rate to 115200 as the below picture.
5—Click the browse button to select the *.bin file that will be updated.
6—Click the "start" button to update software.

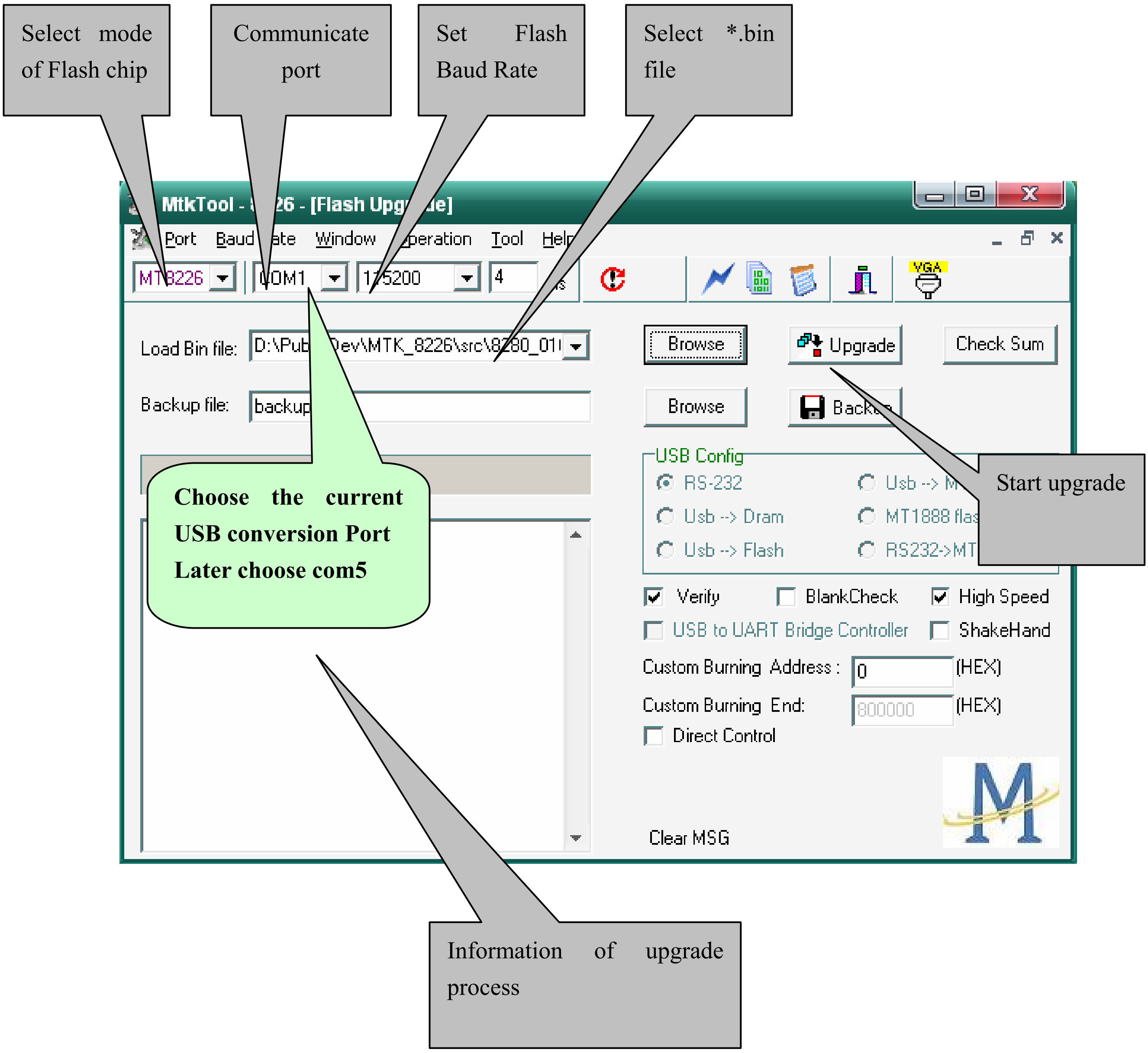
MtkTool - 26 - [Flash Upg de]
Port
Baud ate
Window
peration
Tool
Help
VGA
Browse
Upgrade
Check Sum
Browse
Back
USB Config
Clear MSG

Select mode of Flash chip

Communicate port

Set Flash Baud Rate

Select *.bin file

Start upgrade

Choose the current USB conversion Port Later choose com5

Information of upgrade process

MT8226
COM1
115200
4

Load Bin file: D:\Pub Dev\MTK_8226\src\8280_01

Backup file: backup

● RS-232 ○ Usb --> M
○ Usb --> Dram ○ MT1888 flas
○ Usb --> Flash ○ RS232->MT

☑ Verify ☐ BlankCheck ☑ High Speed
☐ USB to UART Bridge Controller ☐ ShakeHand

Custom Burning Address : 0 (HEX)
Custom Burning End: 800000 (HEX)
☐ Direct Control

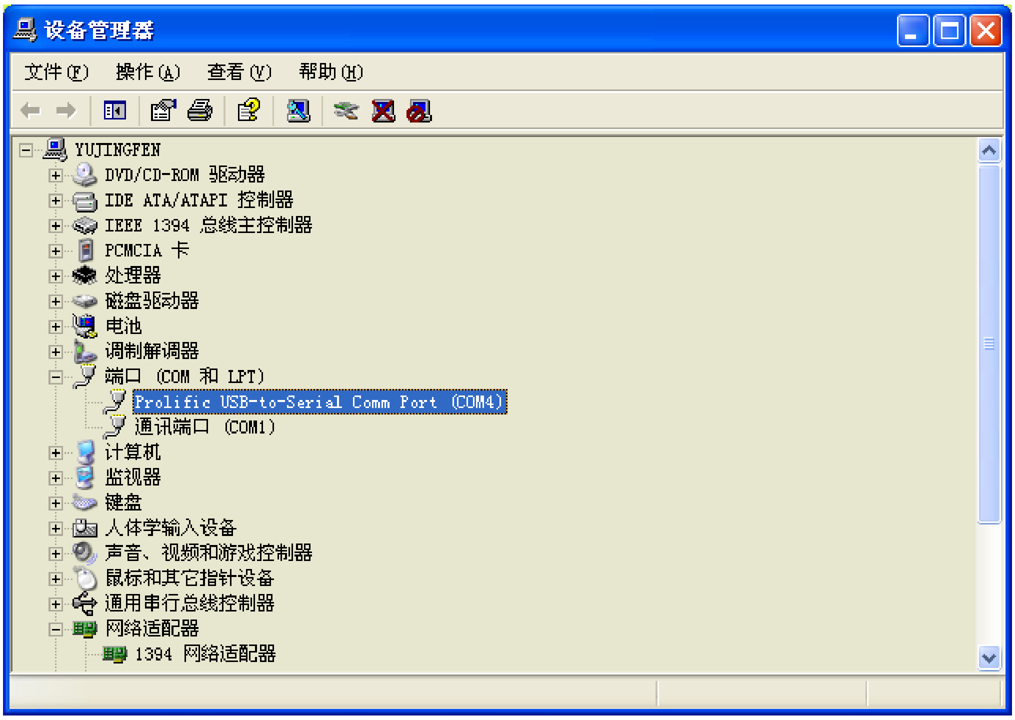
设备管理器
文件(F) 操作(A) 查看(V) 帮助(H)
YUJINGFEN
DVD/CD-ROM 驱动器
IDE ATA/ATAPI 控制器
IEEE 1394 总线主控制器
PCMCIA 卡
处理器
磁盘驱动器
电池
调制解调器
端口 (COM 和 LPT)
Prolific USB-to-Serial Comm Port (COM4)
通讯端口 (COM1)
计算机
监视器
键盘
人体学输入设备
声音、视频和游戏控制器
鼠标和其它指针设备
通用串行总线控制器
网络适配器
1394 网络适配器

Open “Device Manager” and find which port is connected with the TV. In this operation, COM5 is connected to the TV; so, select “COM5” in the MtkTool main interface. Select the right baud rate according to chip model. For this unit(chip model is MT8226), select 115200..So choose “Auto Set Flash BaudRate”

Note: Whether or not click the “Auto Set Flash Baud Rate” in the “window” menu depends on the chip type. If the flash chip does not support high speed transport, do not select this option; otherwise, reserve the selected mood.

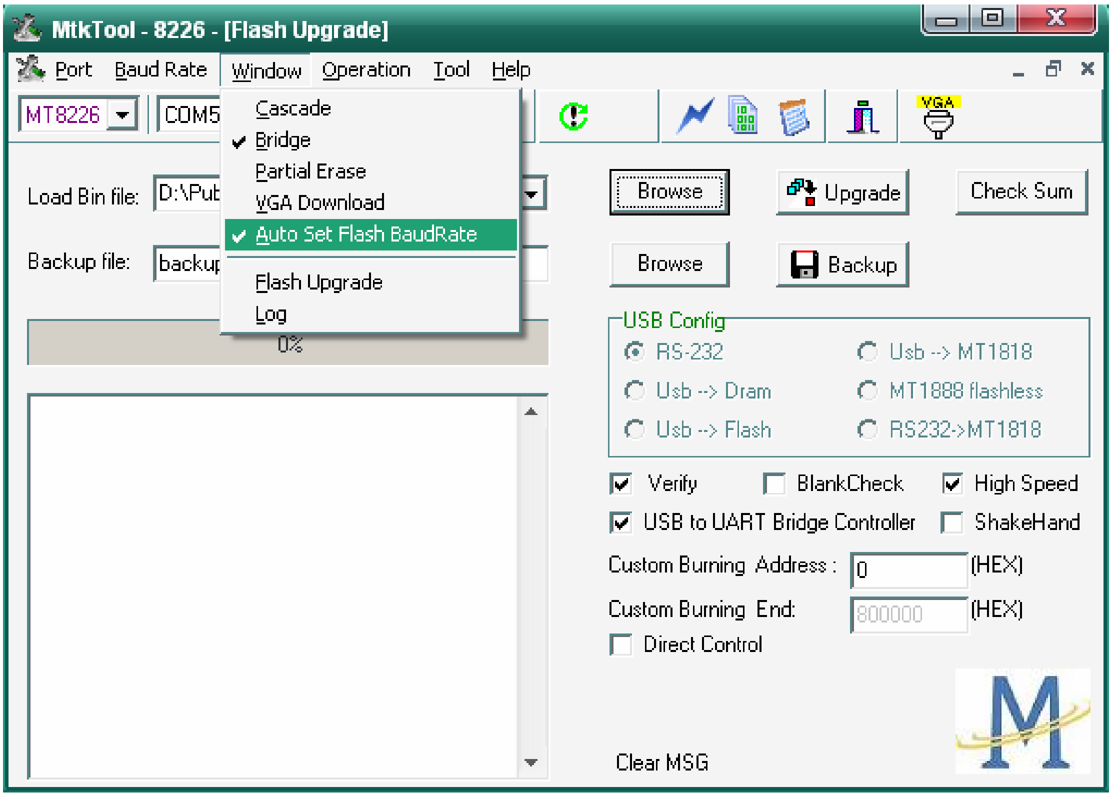
MtkTool - 8226 - [Flash Upgrade]
Port
Baud Rate
Window
Operation
Tool
Help
Cascade
Bridge
Partial Erase
VGA Download
Auto Set Flash BaudRate
Flash Upgrade
Log
Browse
Upgrade
Check Sum
Browse
Backup
USB Config
Clear MSG
VGA

MT8226 | COM5

Load Bin file: D:\Pub

Backup file: backup

0%

USB Config: ● RS-232 ○ Usb --> MT1818 ○ Usb --> Dram ○ MT1888 flashless ○ Usb --> Flash ○ RS232->MT1818

☑ Verify ☐ BlankCheck ☑ High Speed

☑ USB to UART Bridge Controller ☐ ShakeHand

Custom Burning Address : 0 (HEX)

Custom Burning End: 800000 (HEX)

☐ Direct Control

Click “Browse” button, find the upgrading program file, and select it. Press “Upgrade” button and start upgrading.

The following interface appears on the screen, indicating upgrading successfully.

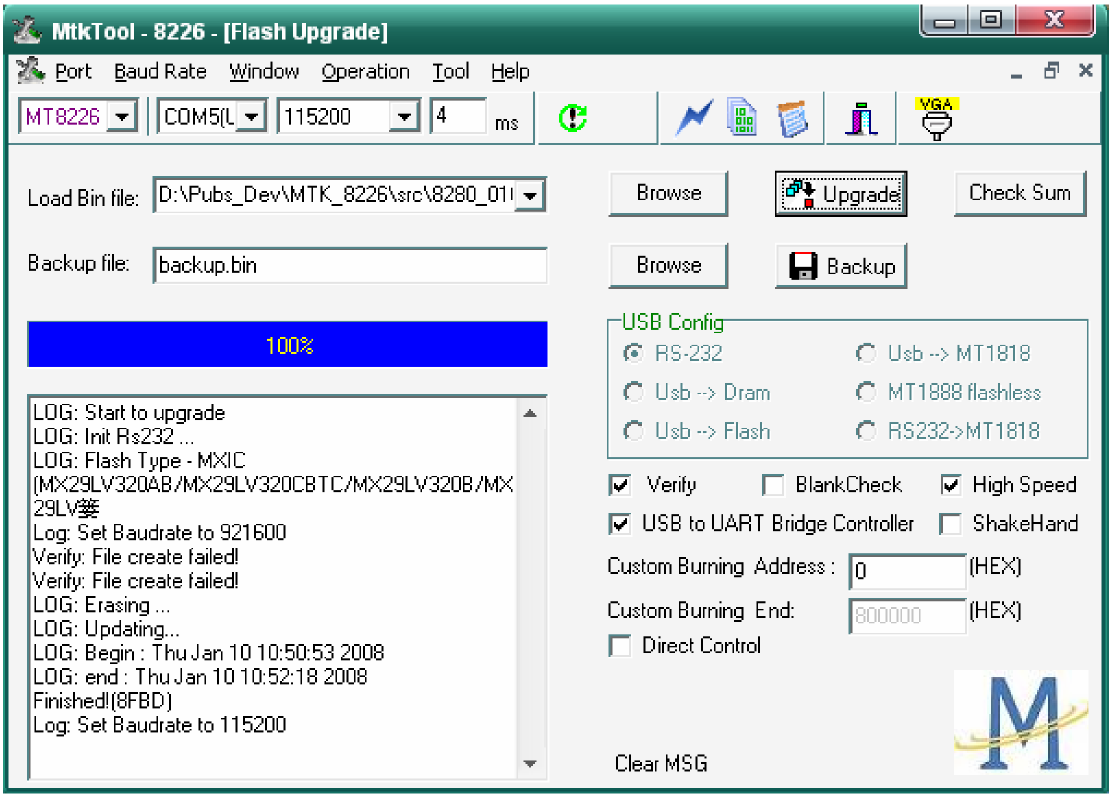
MtkTool - 8226 - [Flash Upgrade]
Port
Baud Rate
Window
Operation
Tool
Help
Browse
Upgrade
Check Sum
Browse
Backup
Clear MSG
VGA

MT8226 | COM5(U | 115200 | 4 ms

Load Bin file: D:\Pubs_Dev\MTK_8226\src\8280_01

Backup file: backup.bin

100%

```
LOG: Start to upgrade
LOG: Init Rs232 ...
LOG: Flash Type - MXIC
(MX29LV320AB/MX29LV320CBTC/MX29LV320B/MX
29LV婆
Log: Set Baudrate to 921600
Verify: File create failed!
Verify: File create failed!
LOG: Erasing ...
LOG: Updating...
LOG: Begin : Thu Jan 10 10:50:53 2008
LOG: end : Thu Jan 10 10:52:18 2008
Finished!(8FBD)
Log: Set Baudrate to 115200
```

USB Config: ● RS-232 ○ Usb --> MT1818 ○ Usb --> Dram ○ MT1888 flashless ○ Usb --> Flash ○ RS232->MT1818

☑ Verify ☐ BlankCheck ☑ High Speed

☑ USB to UART Bridge Controller ☐ ShakeHand

Custom Burning Address : 0 (HEX)

Custom Burning End: 800000 (HEX)

☐ Direct Control

5.3 Update with USB directly

The second update method is with USB directly:

MTK8222 Series can update with USB, the software name should be HISENSE.bin. The Updating Steps is set the Source to "DMP interface", insert the USB(the update file HISENSE.bin,which should be in root directory),The TV automatic identify the upgrading software. step by step according as the informations of the upgrading process.

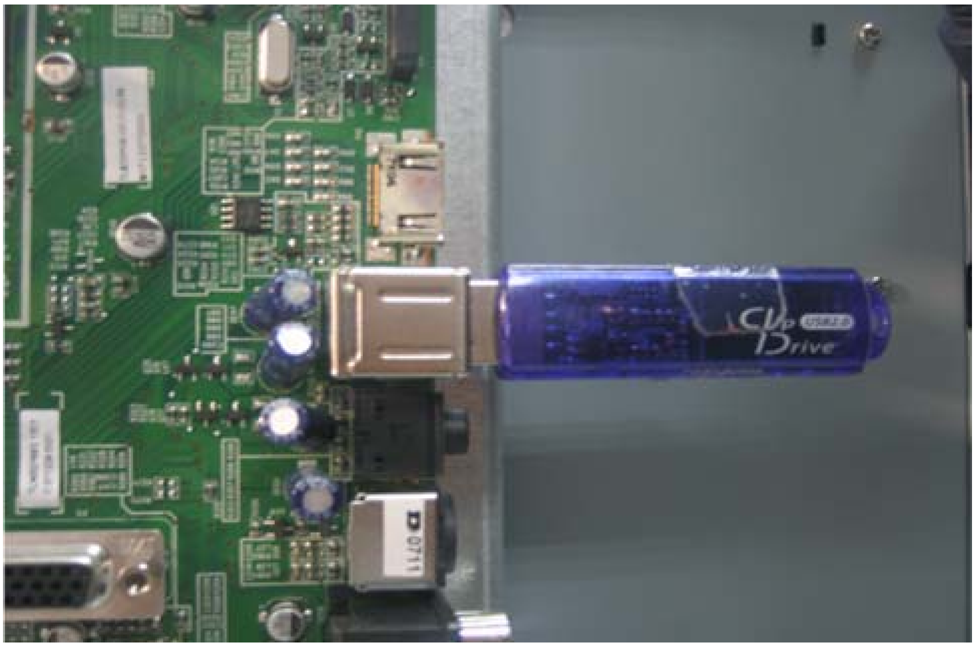

(USB to the Main board directly)

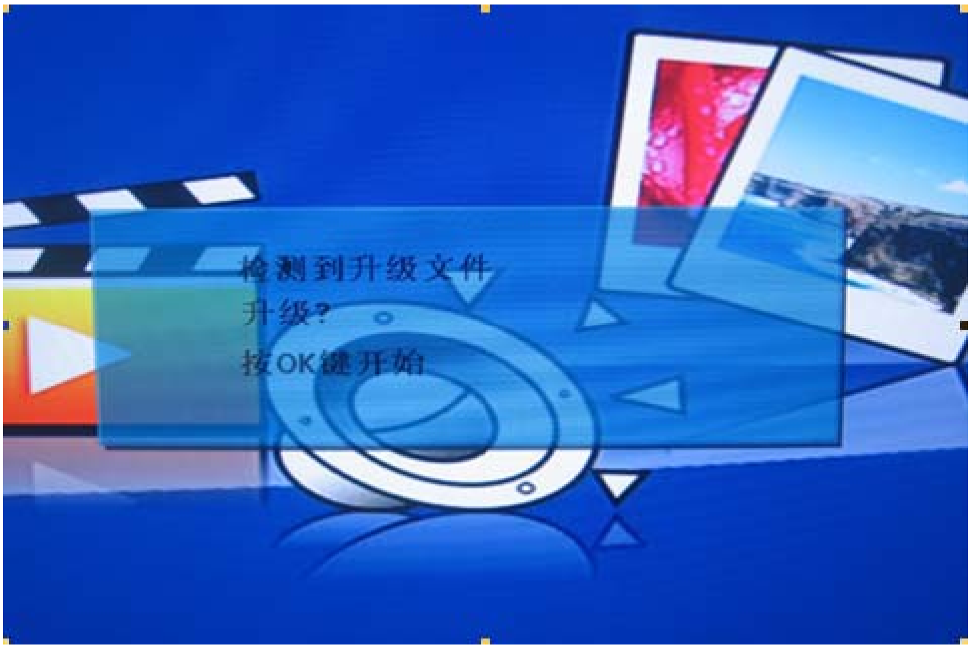

检测到升级文件
升级?
按OK键开始

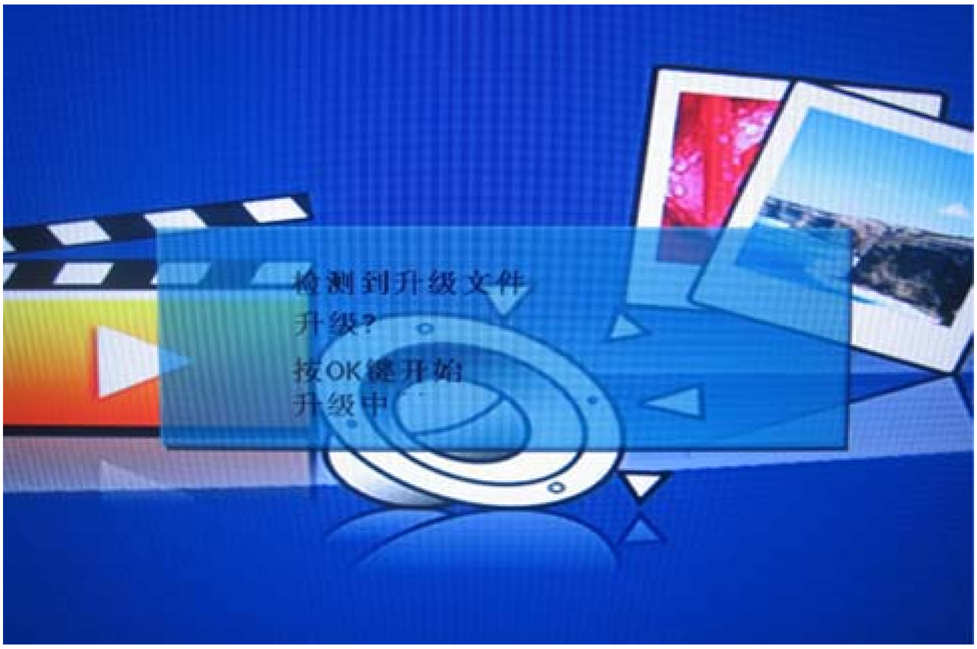

检测到升级文件
升级?
按OK键开始
升级中

After upgrading, you must confirm the software in the Factory Menu and you'd better "CLEAR UNPROTECTLY".

6. Troubleshooting

6.1 Troubleshooting for Remote Control

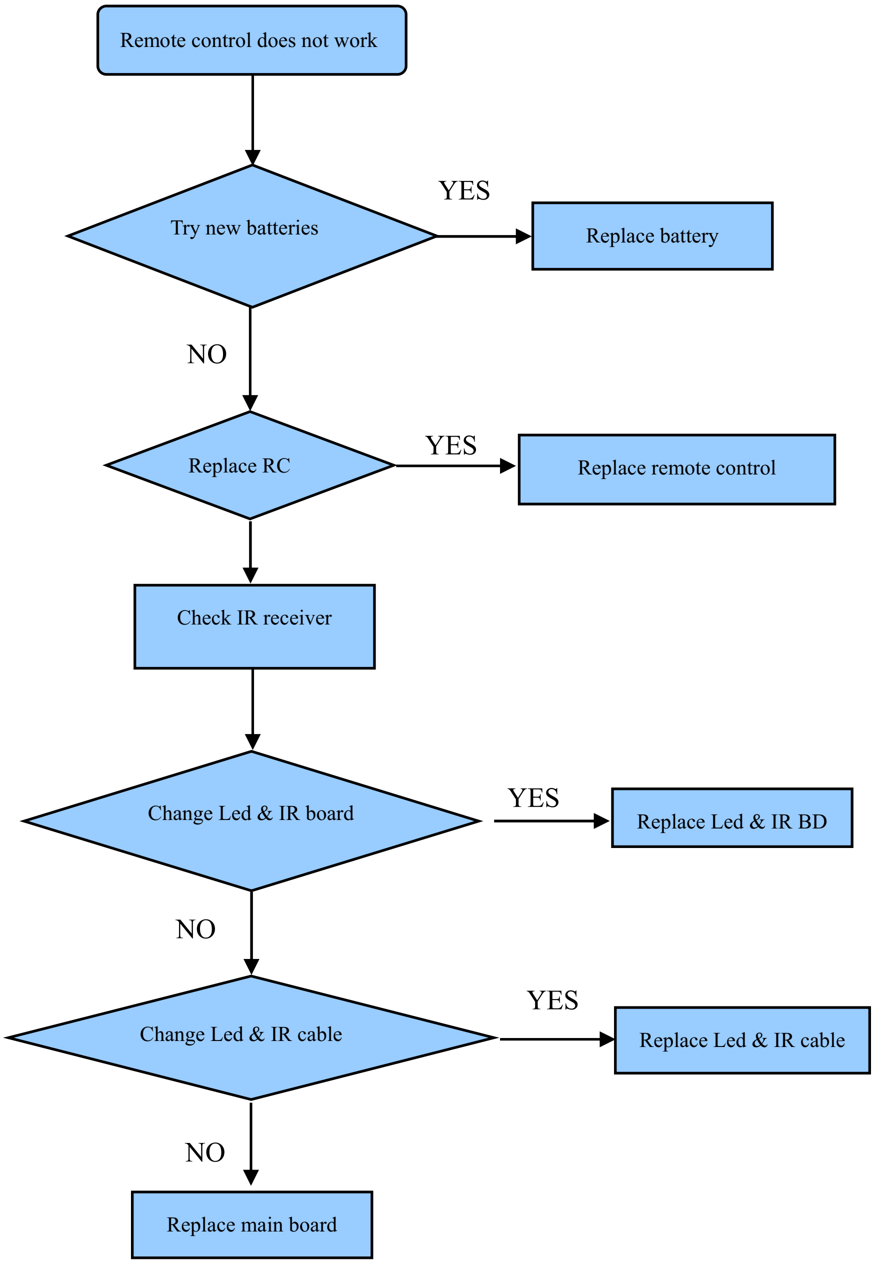
Remote control does not work
Try new batteries
YES
Replace battery
NO
Replace RC
YES
Replace remote control
Check IR receiver
Change Led & IR board
YES
Replace Led & IR BD
NO
Change Led & IR cable
YES
Replace Led & IR cable
NO
Replace main board

6.2 Troubleshooting for Function Key

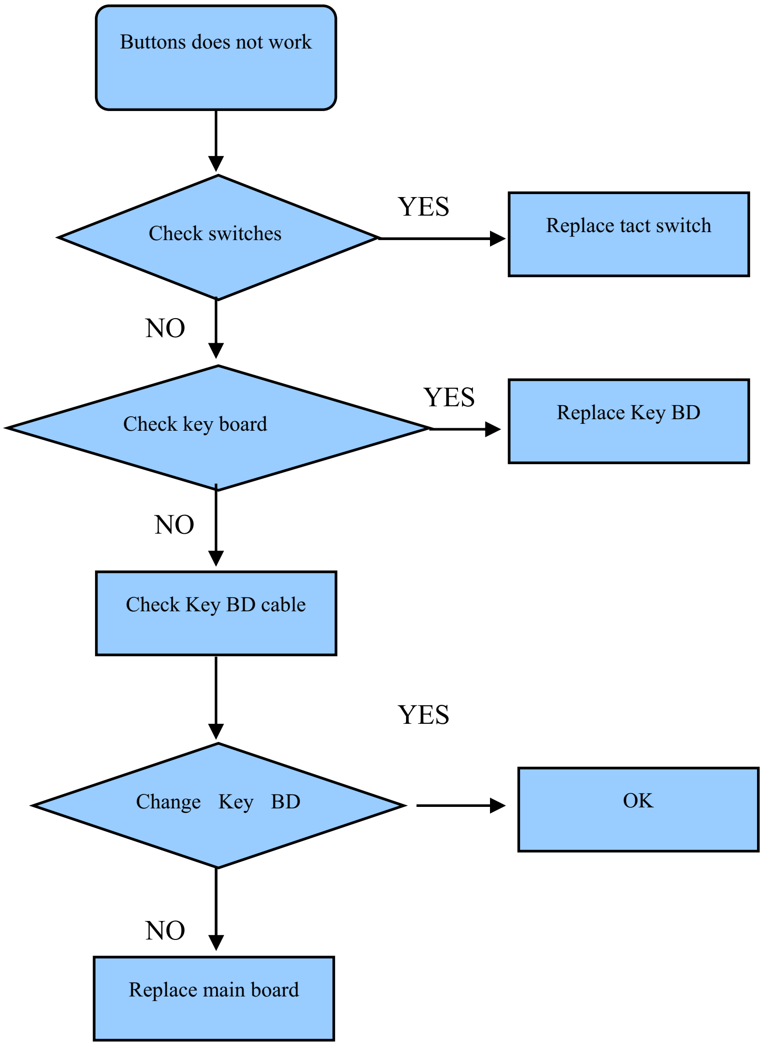
Buttons does not work
Check switches
YES
Replace tact switch
NO
Check key board
YES
Replace Key BD
NO
Check Key BD cable
YES
Change Key BD
OK
NO
Replace main board

6.3 TV won't Power On

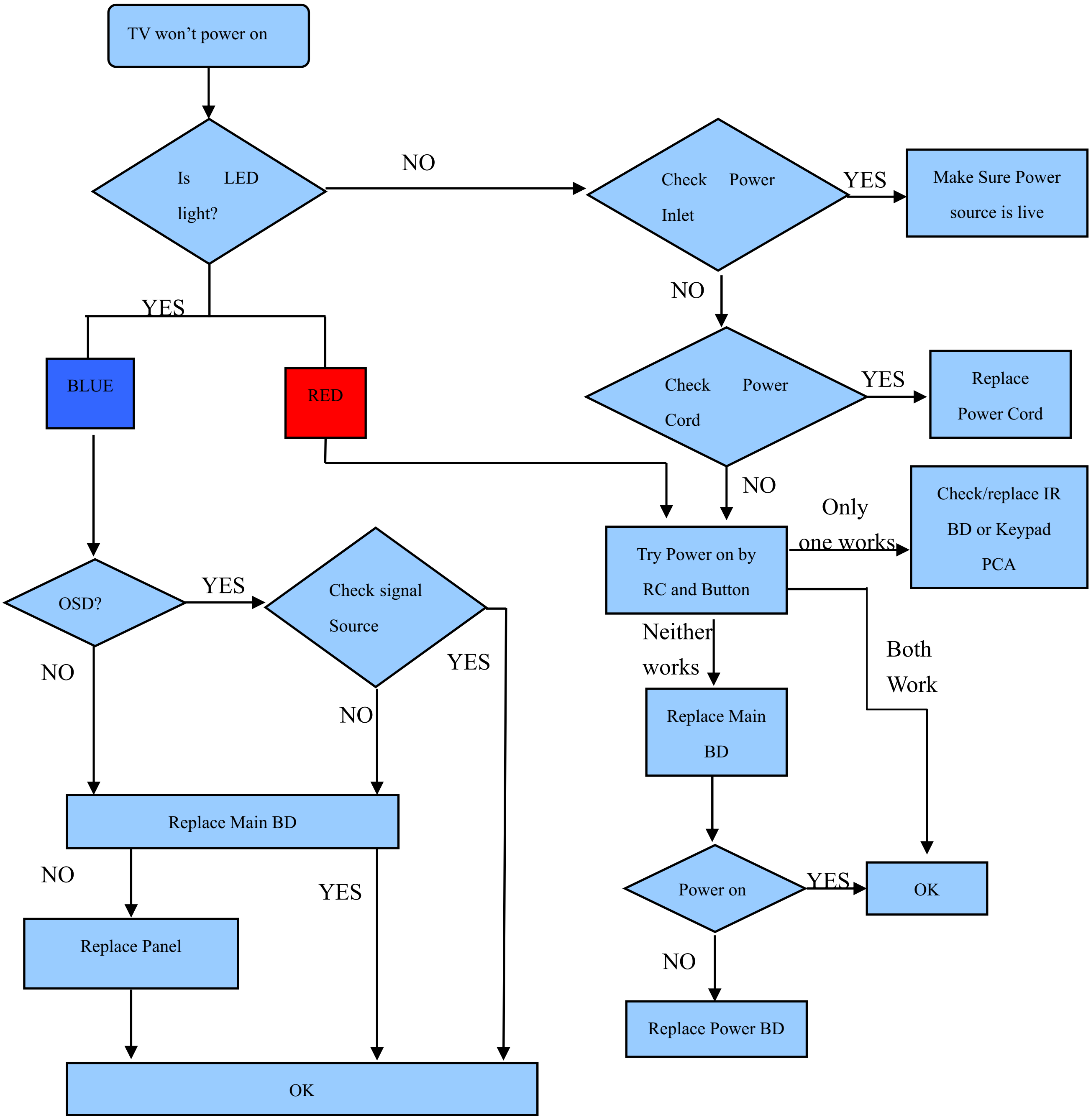
TV won't power on
Is LED light?
NO
Check Power Inlet
YES
Make Sure Power source is live
NO
Check Power Cord
YES
Replace Power Cord
YES
BLUE
RED
NO
Try Power on by RC and Button
Only one works
Check/replace IR BD or Keypad PCA
Neither works
Both Work
Replace Main BD
Power on
YES
OK
NO
Replace Power BD
OSD?
YES
Check signal Source
YES
NO
NO
Replace Main BD
NO
YES
Replace Panel
OK

6.4 Troubleshooting for Audio

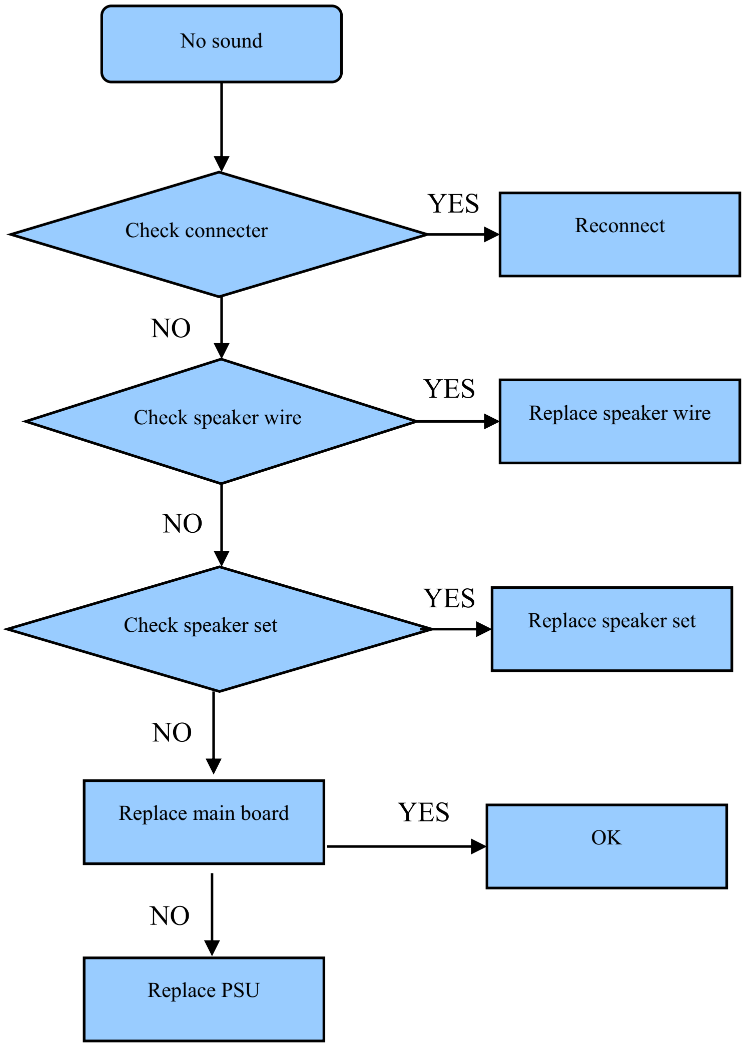
No sound
Check connecter
YES
Reconnect
NO
Check speaker wire
YES
Replace speaker wire
NO
Check speaker set
YES
Replace speaker set
NO
Replace main board
YES
OK
NO
Replace PSU

6.5 Troubleshooting for TV/VGA/HDMI input

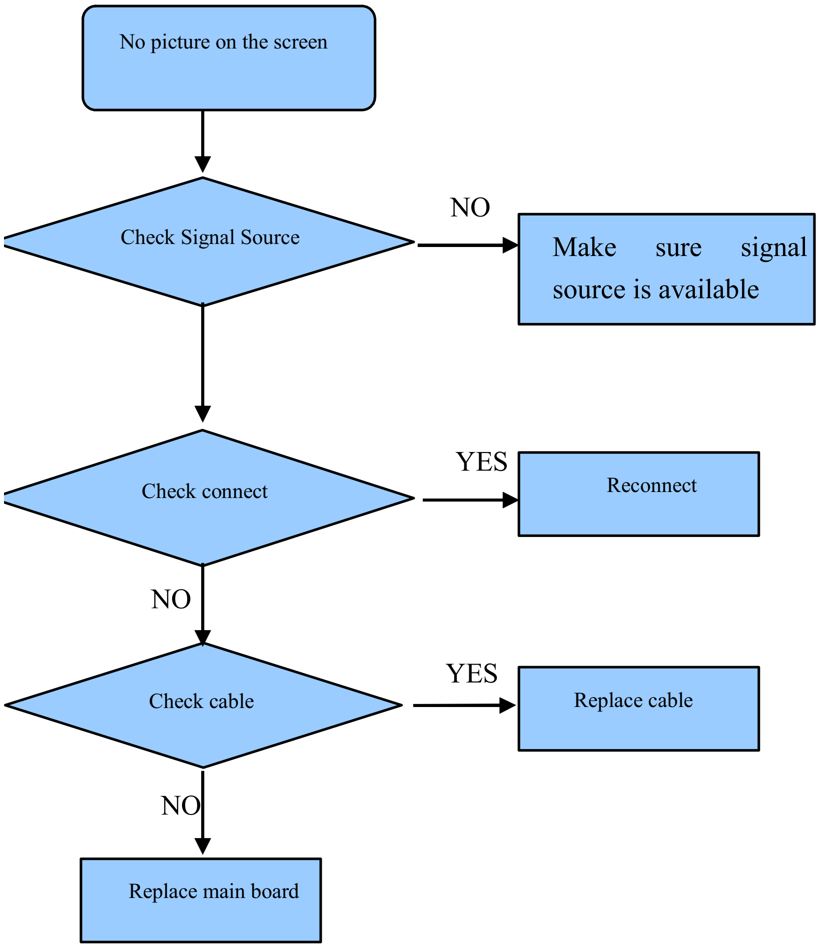
No picture on the screen
Check Signal Source
NO
Make sure signal source is available
Check connect
YES
Reconnect
NO
Check cable
YES
Replace cable
NO
Replace main board

6.6 Troubleshooting for YPbPr input

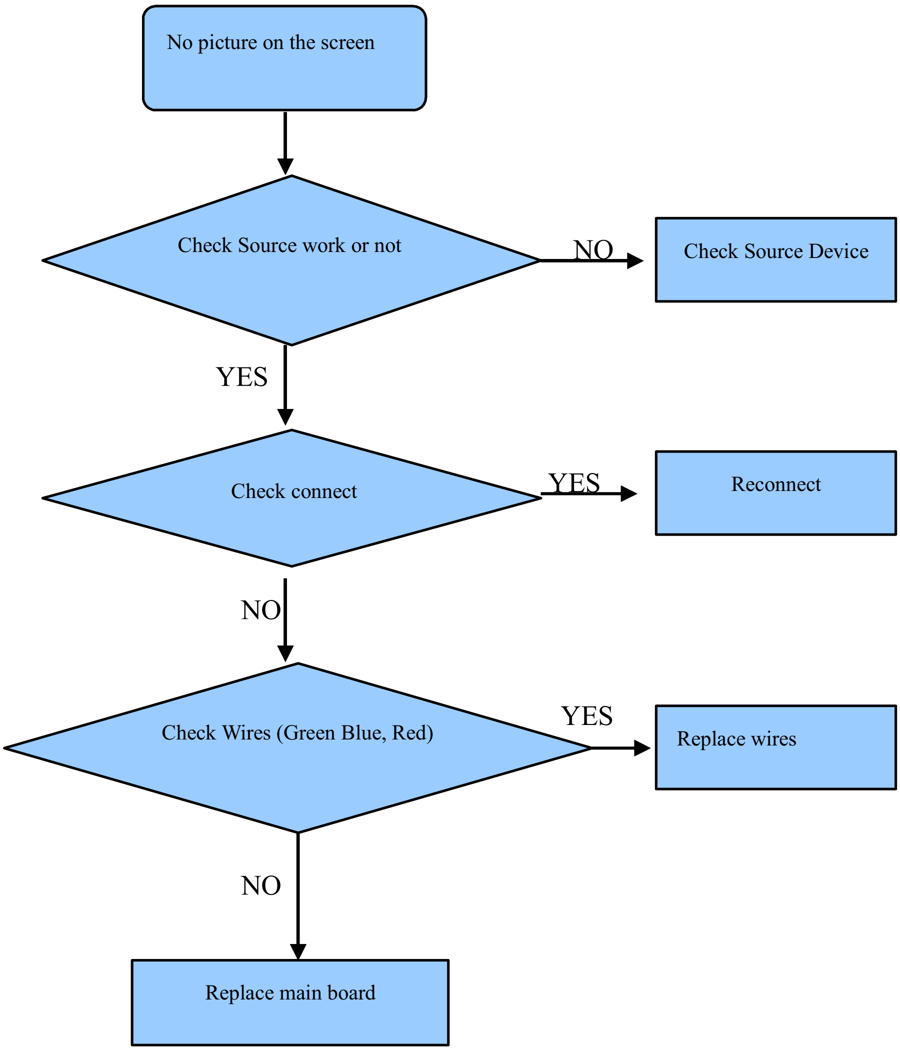
No picture on the screen
Check Source work or not
NO
Check Source Device
YES
Check connect
YES
Reconnect
NO
Check Wires (Green Blue, Red)
YES
Replace wires
NO
Replace main board

6.7 Troubleshooting for Video/S-Video input

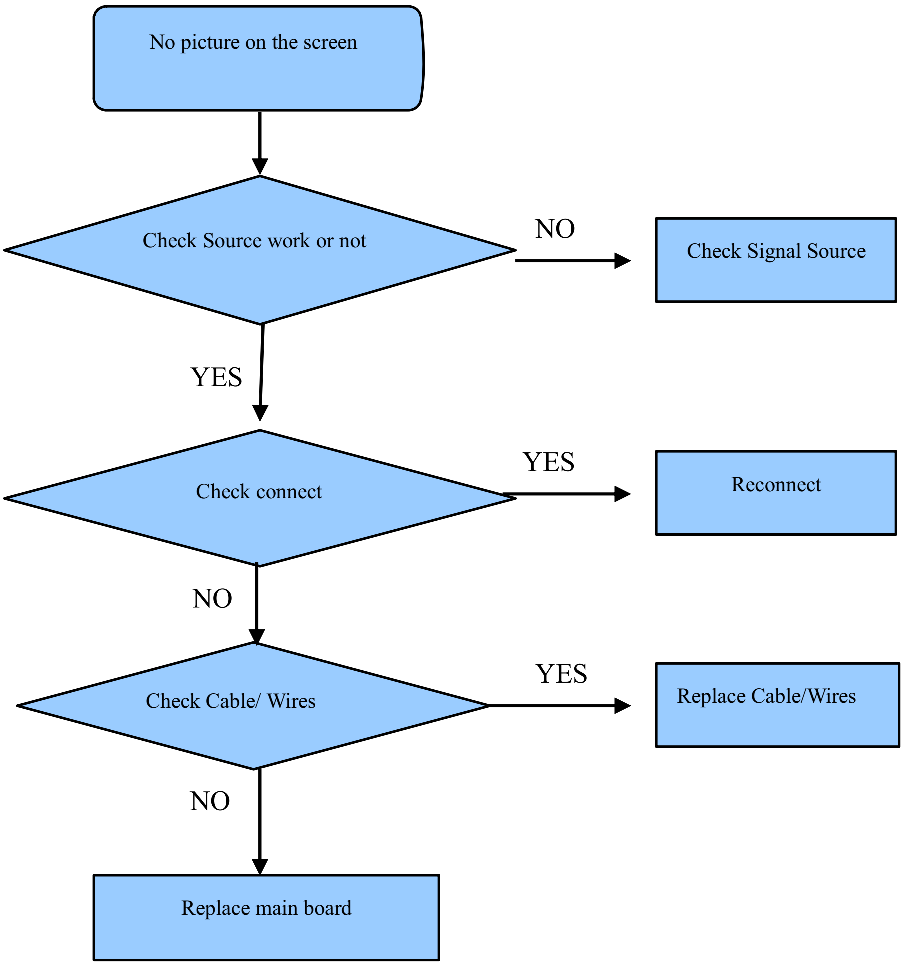
No picture on the screen
Check Source work or not
NO
Check Signal Source
YES
Check connect
YES
Reconnect
NO
Check Cable/ Wires
YES
Replace Cable/Wires
NO
Replace main board

7. Explode View

8. Schematic circuit diagram

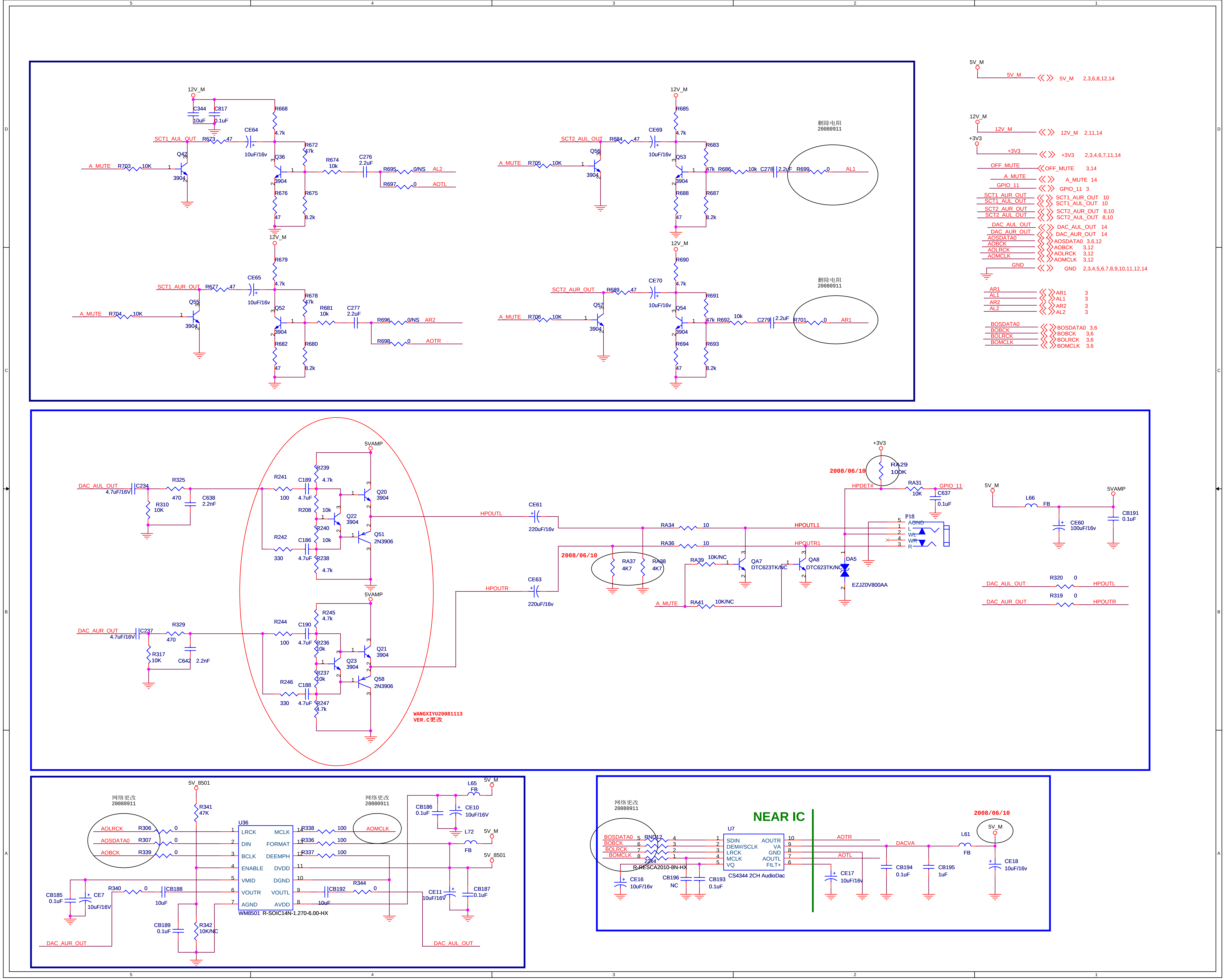
12V_M
C344 10uF
C817 0.1uF
R668 4.7k
CE64 10uF/16v
SCT1_AUL_OUT R673 47
R672 47k
Q36 3904
R674 10k
C276 2.2uF
R695 0/NS AL2
R697 0 AOTL
A_MUTE R703 10K
Q42 3904
R676 47
R675 8.2k
R679 4.7k
SCT1_AUR_OUT R677 47
CE65 10uF/16v
R678 47k
Q52 3904
R681 10k
C277 2.2uF
R696 0/NS AR2
R698 0 AOTR
A_MUTE R704 10K
Q55 3904
R682 47
R680 8.2k
SCT2_AUL_OUT R684 47
CE69 10uF/16v
R685 4.7k
R683 47k
Q53 3904
R686 10k
C278 2.2uF
R699 0 AL1
A_MUTE R705 10K
Q56 3904
R688 47
R687 8.2k
删除电阻
20080911
R690 4.7k
SCT2_AUR_OUT R689 47
CE70 10uF/16v
R691 47k
Q54 3904
R692 10k
C279 2.2uF
R701 0 AR1
A_MUTE R706 10K
Q57 3904
R694 47
R693 8.2k
删除电阻
20080911
5V_M
5V_M 5V_M 2,3,6,8,12,14
12V_M
12V_M 12V_M 2,11,14
+3V3
+3V3 +3V3 2,3,4,6,7,11,14
OFF_MUTE OFF_MUTE 3,14
A_MUTE A_MUTE 14
GPIO_11 GPIO_11 3
SCT1_AUR_OUT SCT1_AUR_OUT 10
SCT1_AUL_OUT SCT1_AUL_OUT 10
SCT2_AUR_OUT SCT2_AUR_OUT 8,10
SCT2_AUL_OUT SCT2_AUL_OUT 8,10
DAC_AUL_OUT DAC_AUL_OUT 14
DAC_AUR_OUT DAC_AUR_OUT 14
AOSDATA0 AOSDATA0 3,6,12
AOBCK AOBCK 3,12
AOLRCK AOLRCK 3,12
AOMCLK AOMCLK 3,12
GND GND 2,3,4,5,6,7,8,9,10,11,12,14
AR1 AR1 3
AL1 AL1 3
AR2 AR2 3
AL2 AL2 3
BOSDATA0 BOSDATA0 3,6
BOBCK BOBCK 3,6
BOLRCK BOLRCK 3,6
BOMCLK BOMCLK 3,6
5VAMP
DAC_AUL_OUT C234 4.7uF/16V
R325 470
R310 10K
C638 2.2nF
R241 100
C189 4.7uF
R239 4.7k
Q20 3904
R208 10k
Q22 3904
R240 10k
Q51 2N3906
R242 330
C186 4.7uF
R238 4.7k
HPOUTL
CE61 220uF/16v
DAC_AUR_OUT C237 4.7uF/16V
R329 470
R317 10K
C642 2.2nF
R244 100
C190 4.7uF
R245 4.7k
R236 10k
Q21 3904
Q23 3904
R237 10k
Q58 2N3906
R246 330
C188 4.7uF
R247 4.7k
WANGXIYU20081113
VER.C更改
HPOUTR
CE63 220uF/16v
+3V3
RA29 100K
2008/06/10
HPDET#
RA31 10K
GPIO_11
C637 0.1uF
RA34 10 HPOUTL1
RA36 10 HPOUTR1
P18 AGND L WL WR R
2008/06/10
RA37 4K7
RA38 4K7
RA39 10K/NC
QA7 DTC623TK/NC
QA8 DTC623TK/NC
DA5 EZJZ0V800AA
A_MUTE RA41 10K/NC
5V_M L66 FB
CE60 100uF/16v
5VAMP CB191 0.1uF
DAC_AUL_OUT R320 0 HPOUTL
DAC_AUR_OUT R319 0 HPOUTR
5V_8501
R341 47K
网络更改
20080911
AOLRCK R306 0
AOSDATA0 R307 0
AOBCK R339 0
U36
LRCK MCLK
DIN FORMAT
BCLK DEEMPH
ENABLE DVDD
VMID DGND
VOUTR VOUTL
AGND AVDD
WM8501 R-SOIC14N-1.270-6.00-HX
R338 100 AOMCLK
R336 100
R337 100
网络更改
20080911
L65 FB 5V_M
CB186 0.1uF
CE10 10uF/16V
L72 FB 5V_M
5V_8501
CB185 0.1uF
CE7 10uF/16V
R340 0
CB188 10uF
CB192 10uF
R344 0
CE11 10uF/16V
CB187 0.1uF
CB189 0.1uF
R342 10K/NC
DAC_AUR_OUT
DAC_AUL_OUT
网络更改
20080911
NEAR IC
BOSDATA0 BOBCK BOLRCK BOMCLK
RND12 22x4 R-RESCA2010-8N-HX
U7
SDIN DEM#/SCLK LRCK MCLK VQ
AOUTR VA GND AOUTL FILT+
CS4344 2CH AudioDac
AOTR DACVA AOTL
CE16 10uF/16v
CB196 NC
CB193 0.1uF
CE17 10uF/16v
CB194 0.1uF
CB195 1uF
L61 FB
2008/06/10
5V_M
CE18 10uF/16v
5 4 3 2 1
D C B A

MT8222_P1V1 (DDR1) VERSION V1.0

(DDR1 WITH TERMINATION)

GPIO usage

GPIO Definition		Function define
ADIN0	SCART FS	
ADIN1	SCART FS	
ADIN2	4052 SWITCH	
ADIN3	KEYPAD	
ADIN4	KEYPAD	
ADIN5	HDMI/VGA EDID E2PROM WP	High = WP disable
GPIO_20	Audio MUX	
GPIO_21	AMP_MUTE CONTROL	High = Mute on
GPIO_22	GAME	
GPIO_23	GAME	
GPIO_24	GAME	
GPIO_25	GAME	
PWM0	DIMMING CONTROL	
PWM1	Power conversion to 33V	
PWM2	SYSTEM E2PROM WP	High = WP disable
PWM3	Audio MUX	
UP30	BL ON/OFF CONTROL	Low = Backlight on
UP31	NORMAL POWER ON/OFF	Low = Normal power on
UP33	HMDI 0 HPLUG DETECT	
UP34	HMDI 1 HPLUG DETECT	
UP35	HMDI 2 HPLUG DETECT	
GPIO_0	MICPHOTO RESERVE	
GPIO_1	LVDS RESERVED	
GPIO_2	FCI	
GPIO_3	FCI	
GPIO_4	LVDS POWER ON/OFF	Hi = LVDS power on
GPIO_5	AMP_SD/FCI	
GPIO_6	SCART1 VIDEO OUTPUT SW/FCI	
GPIO_7	FCI	
GPIO_8	FCI	
GPIO_9	FCI	
GPIO_10	FCI	
GPIO_11	4052 SWITCH	Low = HP insert
INT	Audio MUX select bit 0	
SPDIFIN	LVDS RESERVED	
AOSDATA0	USB0 OC TAG	
AOLRCK	USB0 PWR ENABLE	
AOBCLK	USB1 PWR ENABLE	
AOMCLK	USB1 OC TAG	

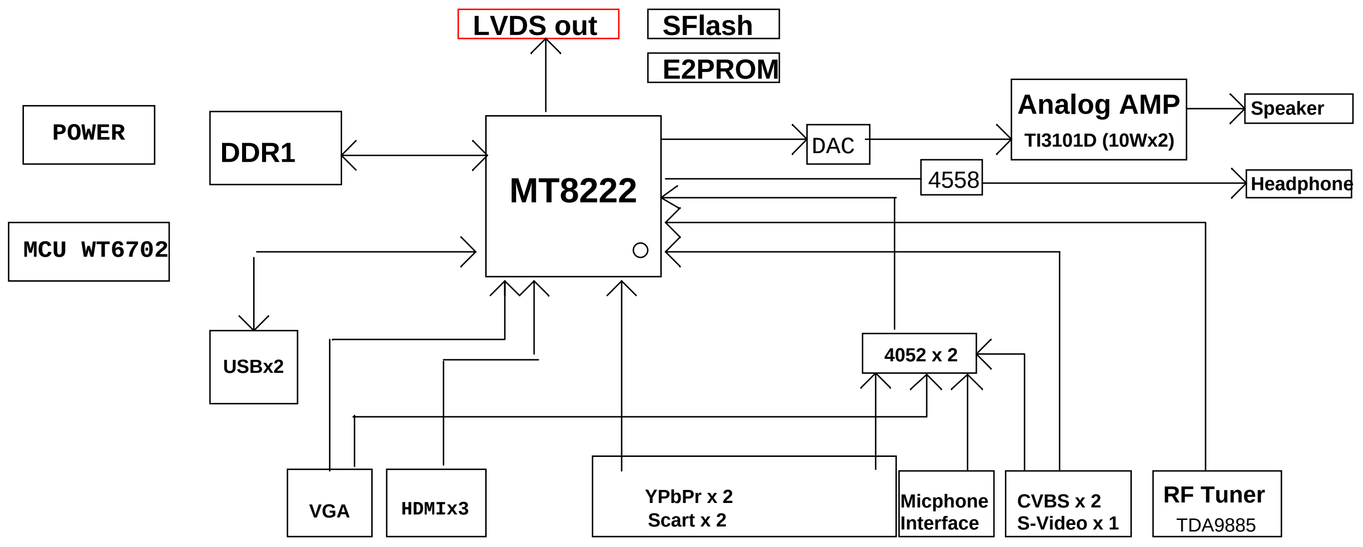
LVDS out
SFlash
E2PROM
POWER
DDR1
MT8222
Analog AMP
TI3101D (10Wx2)
Speaker
DAC
4558
Headphone
MCU WT6702
USBx2
4052 x 2
VGA
HDMIx3
YPbPr x 2
Scart x 2
Micphone
Interface
CVBS x 2
S-Video x 1
RF Tuner
TDA9885

Power Distribution

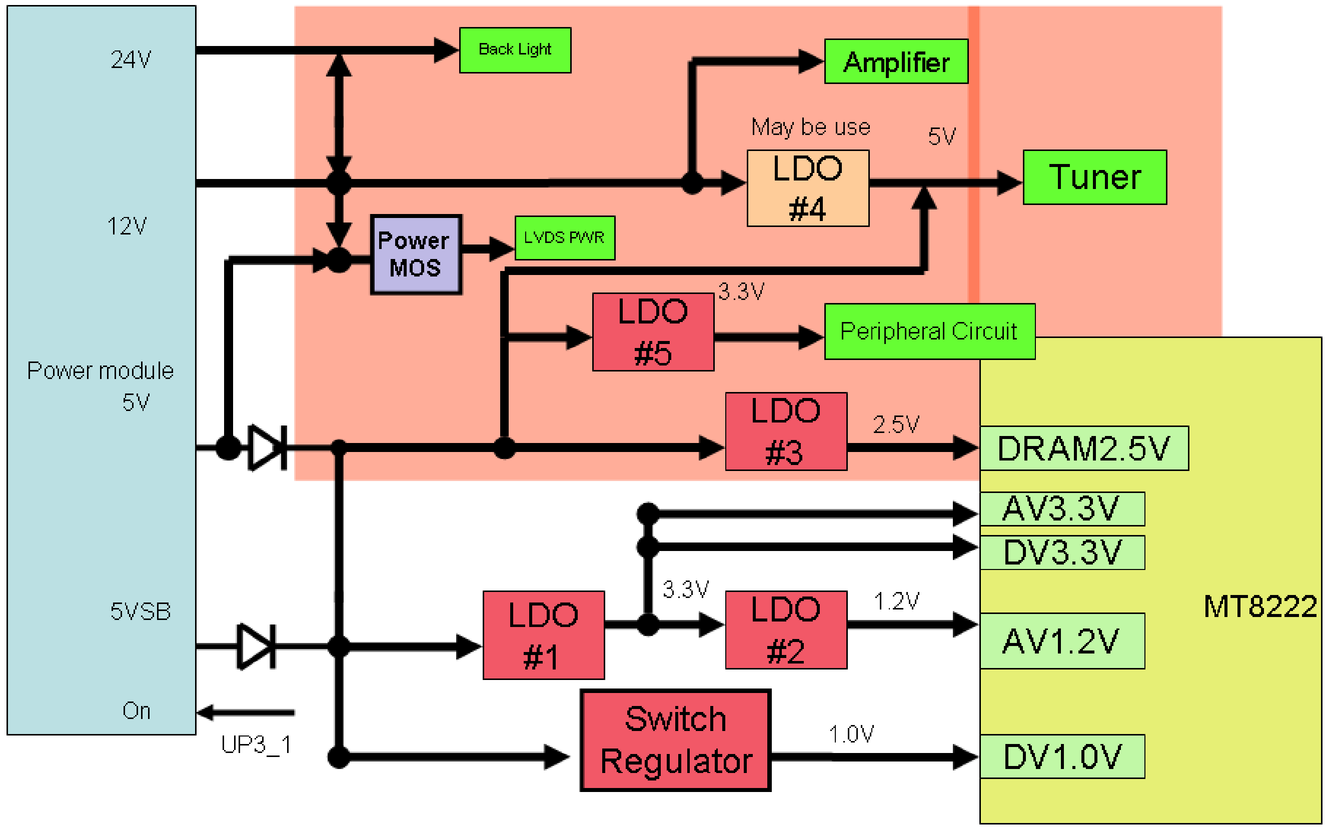
24V
12V
Power module
5V
5VSB
On
UP3_1
Back Light
Amplifier
May be use
LDO #4
5V
Tuner
Power MOS
LVDS PWR
3.3V
LDO #5
Peripheral Circuit
LDO #3
2.5V
DRAM2.5V
AV3.3V
DV3.3V
MT8222
3.3V
LDO #1
LDO #2
1.2V
AV1.2V
Switch Regulator
1.0V
DV1.0V

MediaTek Confidential

MediaTek (ShenZhen) Inc.
Title
GPIO/BLOCK
Size C
Document Number HISENSE_MT8222_EU
Drawn: Jiu.Ni
Rev 1
Date: 2008/1/25
Sheet 1 of 14

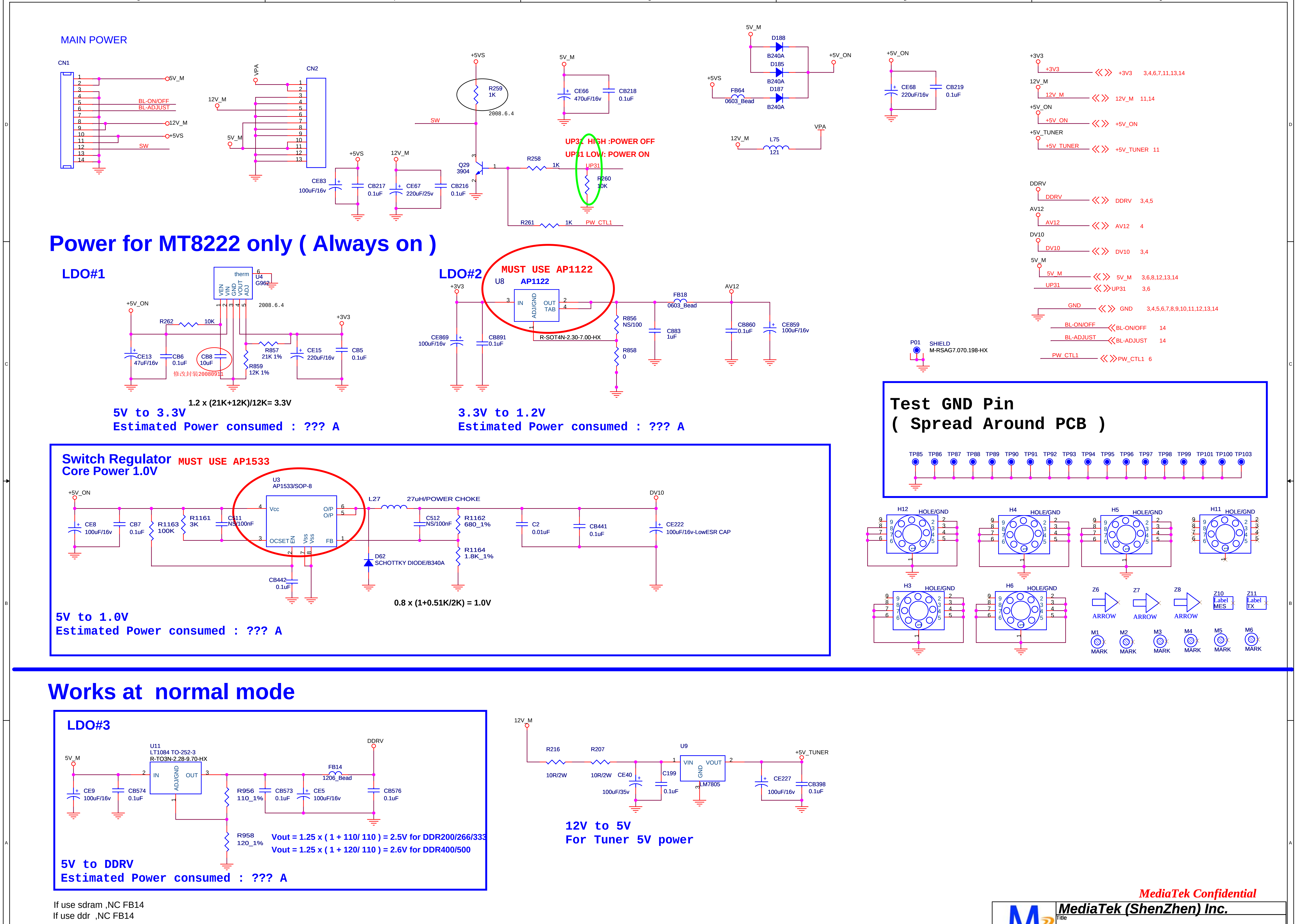

MAIN POWER

Power for MT8222 only (Always on)

LDO#1

1.2 x (21K+12K)/12K= 3.3V

5V to 3.3V
Estimated Power consumed : ??? A

LDO#2

MUST USE AP1122

3.3V to 1.2V
Estimated Power consumed : ??? A

UP31 HIGH :POWER OFF
UP31 LOW: POWER ON

Test GND Pin
(Spread Around PCB)

Switch Regulator
Core Power 1.0V

MUST USE AP1533

0.8 x (1+0.51K/2K) = 1.0V

5V to 1.0V
Estimated Power consumed : ??? A

Works at normal mode

LDO#3

Vout = 1.25 x (1 + 110/ 110) = 2.5V for DDR200/266/333
Vout = 1.25 x (1 + 120/ 110) = 2.6V for DDR400/500

5V to DDRV
Estimated Power consumed : ??? A

12V to 5V
For Tuner 5V power

If use sdram ,NC FB14
If use ddr ,NC FB14

CN1
CN2
5V_M
BL-ON/OFF
BL-ADJUST
12V_M
+5VS
SW
VPA
CE83 100uF/16v
CB217 0.1uF
CE67 220uF/25v
CB216 0.1uF
R259 1K
2008.6.4
Q29 3904
R258 1K
UP31
R260 10K
R261 1K
PW_CTL1
CE66 470uF/16v
CB218 0.1uF
D188 B240A
D185 B240A
D187 B240A
+5V_ON
FB64 0603_Bead
L75 121
CE68 220uF/16v
CB219 0.1uF
+3V3 3,4,6,7,11,13,14
12V_M 11,14
+5V_ON
+5V_TUNER 11
DDRV 3,4,5
AV12 4
DV10 3,4
5V_M 3,6,8,12,13,14
UP31 3,6
GND 3,4,5,6,7,8,9,10,11,12,13,14
BL-ON/OFF 14
BL-ADJUST 14
PW_CTL1 6
P01 SHIELD M-RSAG7.070.198-HX
U4 G962
therm
VEN VIN GND VOUT ADJ
R262 10K
CE13 47uF/16v
CB6 0.1uF
CB8 10uF
修改封装20080911
R857 21K 1%
R859 12K 1%
CE15 220uF/16v
CB5 0.1uF
U8 AP1122
IN OUT TAB ADJ/GND
R-SOT4N-2.30-7.00-HX
CE869 100uF/16v
CB891 0.1uF
R856 NS/100
R858 0
CB883 1uF
FB18 0603_Bead
CB860 0.1uF
CE859 100uF/16v
TP85 TP86 TP87 TP88 TP89 TP90 TP91 TP92 TP93 TP94 TP95 TP96 TP97 TP98 TP99 TP101 TP100 TP103
H12 HOLE/GND
H4 HOLE/GND
H5 HOLE/GND
H11 HOLE/GND
H3 HOLE/GND
H6 HOLE/GND
Z6 ARROW
Z7 ARROW
Z8 ARROW
Z10 Label MES
Z11 Label TX
M1 MARK
M2 MARK
M3 MARK
M4 MARK
M5 MARK
M6 MARK
U3 AP1533/SOP-8
Vcc O/P O/P OCSET EN Vss Vss FB
CE8 100uF/16v
CB7 0.1uF
R1163 100K
R1161 3K
C511 NS/100nF
L27 27uH/POWER CHOKE
C512 NS/100nF
R1162 680_1%
R1164 1.8K_1%
D62 SCHOTTKY DIODE/B340A
CB442 0.1uF
C2 0.01uF
CB441 0.1uF
CE222 100uF/16v-LowESR CAP
U11 LT1084 TO-252-3 R-TO3N-2.28-9.70-HX
CE9 100uF/16v
CB574 0.1uF
R956 110_1%
R958 120_1%
CB573 0.1uF
CE5 100uF/16v
FB14 1206_Bead
CB576 0.1uF
R216 10R/2W
R207 10R/2W
CE40 100uF/35v
C199 0.1uF
U9 LM7805
VIN VOUT GND
CE227 100uF/16v
CB398 0.1uF

MediaTek Confidential

MediaTek (ShenZhen) Inc.	
Title	Power LDO
Size C	Document Number HISENSE_MT8222_EU
Drawn: Jiu.Ni	Rev 1
Date: 2008/1/25	Sheet 2 of 14

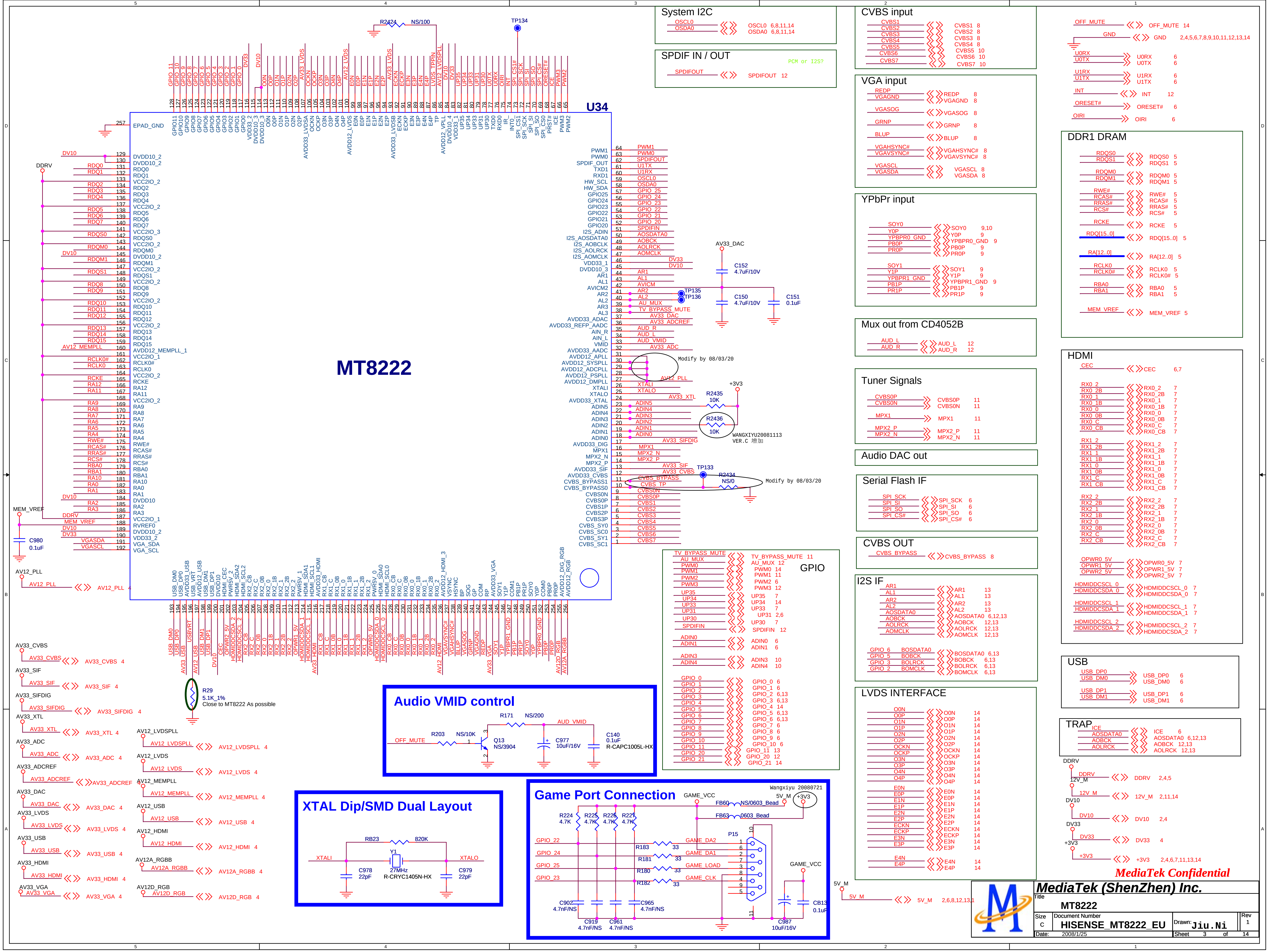
U34
MT8222
System I2C
SPDIF IN / OUT
PCM or I2S?
CVBS input
VGA input
YPbPr input
Mux out from CD4052B
Tuner Signals
Audio DAC out
Serial Flash IF
CVBS OUT
I2S IF
GPIO
LVDS INTERFACE
DDR1 DRAM
HDMI
USB
TRAP
Audio VMID control
XTAL Dip/SMD Dual Layout
Game Port Connection
Modify by 08/03/20
Close to MT8222 As possible
WANGXIYU20081113
VER.C 增加
Wangxiyu 20080721
R29
5.1K_1%
C152
4.7uF/10V
C150
4.7uF/10V
C151
0.1uF
C980
0.1uF
R2435
10K
R2436
10K
R2434
NS/0
R2424
NS/100
TP134
TP135
TP136
TP133
R203
NS/10K
R171
NS/200
Q13
NS/3904
C977
10uF/16V
C140
0.1uF
R-CAPC1005L-HX
RB23
820K
Y1
27MHz
R-CRYC1405N-HX
C978
22pF
C979
22pF
XTALI
XTALO
GAME_VCC
FB60
NS/0603_Bead
FB63
0603_Bead
P15
R224
4.7K
R225
4.7K
R226
4.7K
R227
4.7K
R183
R181
R180
R182
33
C902
4.7nF/NS
C965
4.7nF/NS
C919
4.7nF/NS
C961
4.7nF/NS
C987
10uF/16V
CB13
0.1uF
5V_M
+3V3
AV33_DAC
DDRV
MEM_VREF
MediaTek Confidential

MediaTek (ShenZhen) Inc.

Title: MT8222

Size: C
Document Number: HISENSE_MT8222_EU
Rev: 1
Drawn: Jiu.Ni
Date: 2008/1/25
Sheet 3 of 14

(Bypass CAPs arround MT8222)

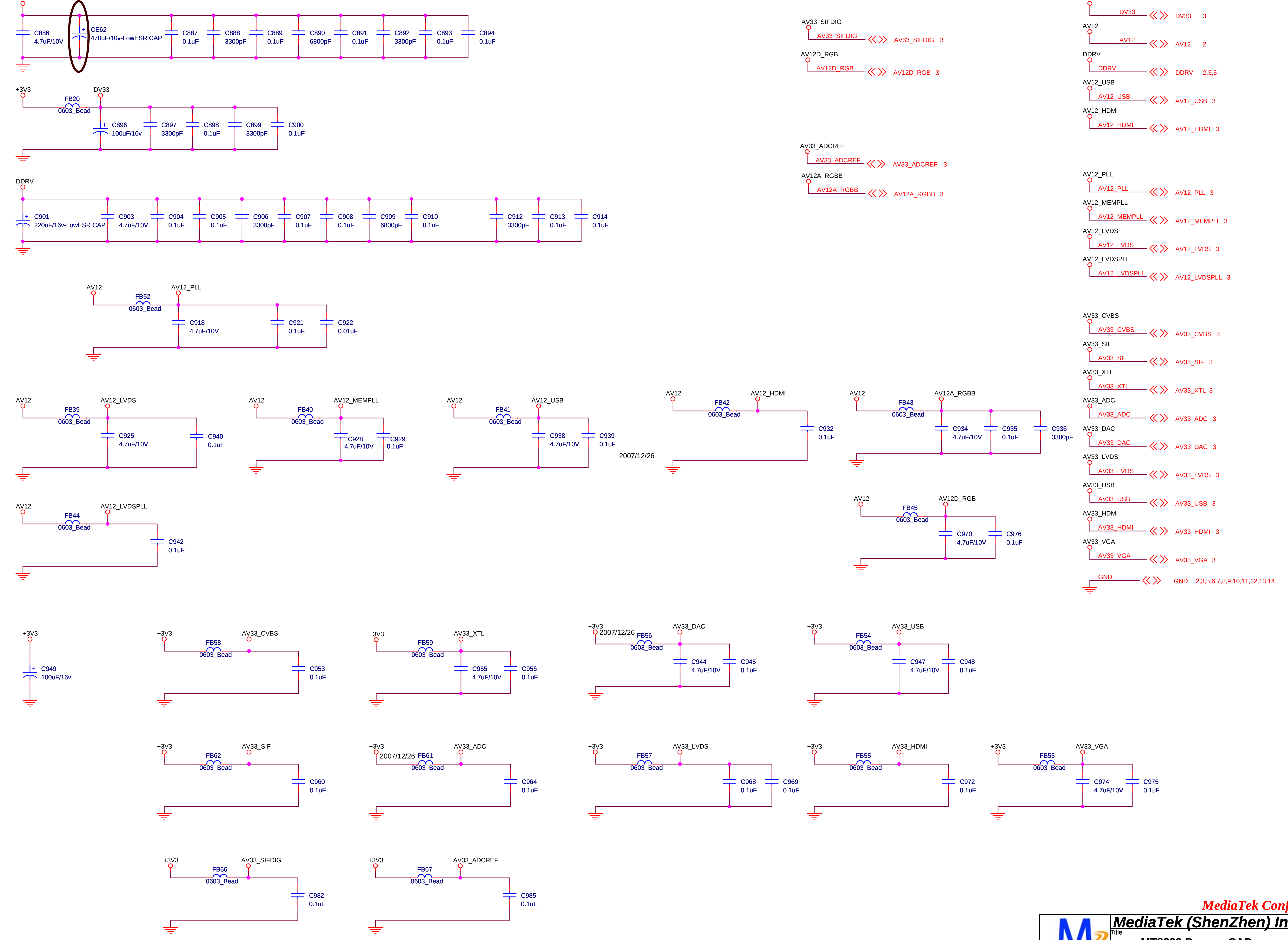
DV10
add by 08/03/20
C886 4.7uF/10V
CE62 470uF/10v-LowESR CAP
C887 0.1uF
C888 3300pF
C889 0.1uF
C890 6800pF
C891 0.1uF
C892 3300pF
C893 0.1uF
C894 0.1uF
+3V3
DV33
FB20 0603_Bead
C896 100uF/16v
C897 3300pF
C898 0.1uF
C899 3300pF
C900 0.1uF
DDRV
C901 220uF/16v-LowESR CAP
C903 4.7uF/10V
C904 0.1uF
C905 0.1uF
C906 3300pF
C907 0.1uF
C908 0.1uF
C909 6800pF
C910 0.1uF
C912 3300pF
C913 0.1uF
C914 0.1uF
AV12
AV12_PLL
FB52 0603_Bead
C918 4.7uF/10V
C921 0.1uF
C922 0.01uF
AV12_LVDS
FB39 0603_Bead
C925 4.7uF/10V
C940 0.1uF
AV12_MEMPLL
FB40 0603_Bead
C928 4.7uF/10V
C929 0.1uF
AV12_USB
FB41 0603_Bead
C938 4.7uF/10V
C939 0.1uF
2007/12/26
AV12_HDMI
FB42 0603_Bead
C932 0.1uF
AV12A_RGBB
FB43 0603_Bead
C934 4.7uF/10V
C935 0.1uF
C936 3300pF
AV12_LVDSPLL
FB44 0603_Bead
C942 0.1uF
AV12D_RGB
FB45 0603_Bead
C970 4.7uF/10V
C976 0.1uF
C949 100uF/16v
AV33_CVBS
FB58 0603_Bead
C953 0.1uF
AV33_XTL
FB59 0603_Bead
C955 4.7uF/10V
C956 0.1uF
2007/12/26
AV33_DAC
FB56 0603_Bead
C944 4.7uF/10V
C945 0.1uF
AV33_USB
FB54 0603_Bead
C947 4.7uF/10V
C948 0.1uF
AV33_SIF
FB62 0603_Bead
C960 0.1uF
2007/12/26
AV33_ADC
FB61 0603_Bead
C964 0.1uF
AV33_LVDS
FB57 0603_Bead
C968 0.1uF
C969 0.1uF
AV33_HDMI
FB55 0603_Bead
C972 0.1uF
AV33_VGA
FB53 0603_Bead
C974 4.7uF/10V
C975 0.1uF
AV33_SIFDIG
FB66 0603_Bead
C982 0.1uF
AV33_ADCREF
FB67 0603_Bead
C985 0.1uF
AV33_SIFDIG 3
AV12D_RGB 3
AV33_ADCREF 3
AV12A_RGBB 3
DV10 2,3
+3V3 2,3,6,7,11,13,14
DV33 3
AV12 2
DDRV 2,3,5
AV12_USB 3
AV12_HDMI 3
AV12_PLL 3
AV12_MEMPLL 3
AV12_LVDS 3
AV12_LVDSPLL 3
AV33_CVBS 3
AV33_SIF 3
AV33_XTL 3
AV33_ADC 3
AV33_DAC 3
AV33_LVDS 3
AV33_USB 3
AV33_HDMI 3
AV33_VGA 3
GND 2,3,5,6,7,8,9,10,11,12,13,14

MediaTek Confidential

MediaTek (ShenZhen) Inc.

Title: MT8222 Bypass CAPs

Size	Document Number	Drawn:	Rev
C	HISENSE_MT8222_EU	Jiu.Ni	1

Date: 2008/1/25 Sheet 4 of 14

(DDR1 DRAM With Termination)

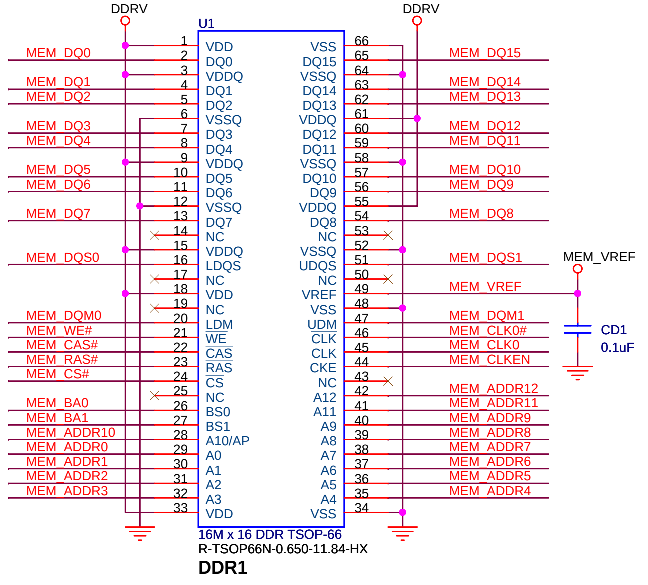
DDRV
DDRV
U1
VDD DQ0 VDDQ DQ1 DQ2 VSSQ DQ3 DQ4 VDDQ DQ5 DQ6 VSSQ DQ7 NC VDDQ LDQS NC VDD NC LDM WE CAS RAS CS NC BS0 BS1 A10/AP A0 A1 A2 A3 VDD
VSS DQ15 VSSQ DQ14 DQ13 VDDQ DQ12 DQ11 VSSQ DQ10 DQ9 VDDQ DQ8 NC VSSQ UDQS NC VREF VSS UDM CLK CLK CKE NC A12 A11 A9 A8 A7 A6 A5 A4 VSS
MEM_DQ0 MEM_DQ1 MEM_DQ2 MEM_DQ3 MEM_DQ4 MEM_DQ5 MEM_DQ6 MEM_DQ7 MEM_DQS0 MEM_DQM0 MEM_WE# MEM_CAS# MEM_RAS# MEM_CS# MEM_BA0 MEM_BA1 MEM_ADDR10 MEM_ADDR0 MEM_ADDR1 MEM_ADDR2 MEM_ADDR3
MEM_DQ15 MEM_DQ14 MEM_DQ13 MEM_DQ12 MEM_DQ11 MEM_DQ10 MEM_DQ9 MEM_DQ8 MEM_DQS1 MEM_VREF MEM_DQM1 MEM_CLK0# MEM_CLK0 MEM_CLKEN MEM_ADDR12 MEM_ADDR11 MEM_ADDR9 MEM_ADDR8 MEM_ADDR7 MEM_ADDR6 MEM_ADDR5 MEM_ADDR4
MEM_VREF
CD1
0.1uF
16M x 16 DDR TSOP-66
R-TSOP66N-0.650-11.84-HX
DDR1

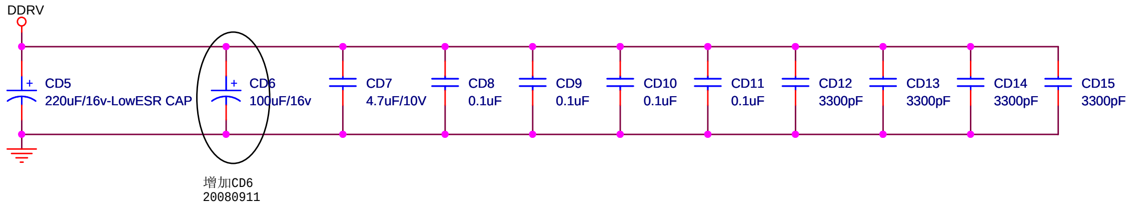
DDRV
CD5
220uF/16v-LowESR CAP
CD6
100uF/16v
增加CD6
20080911
CD7
4.7uF/10V
CD8
0.1uF
CD9
0.1uF
CD10
0.1uF
CD11
0.1uF
CD12
3300pF
CD13
3300pF
CD14
3300pF
CD15
3300pF

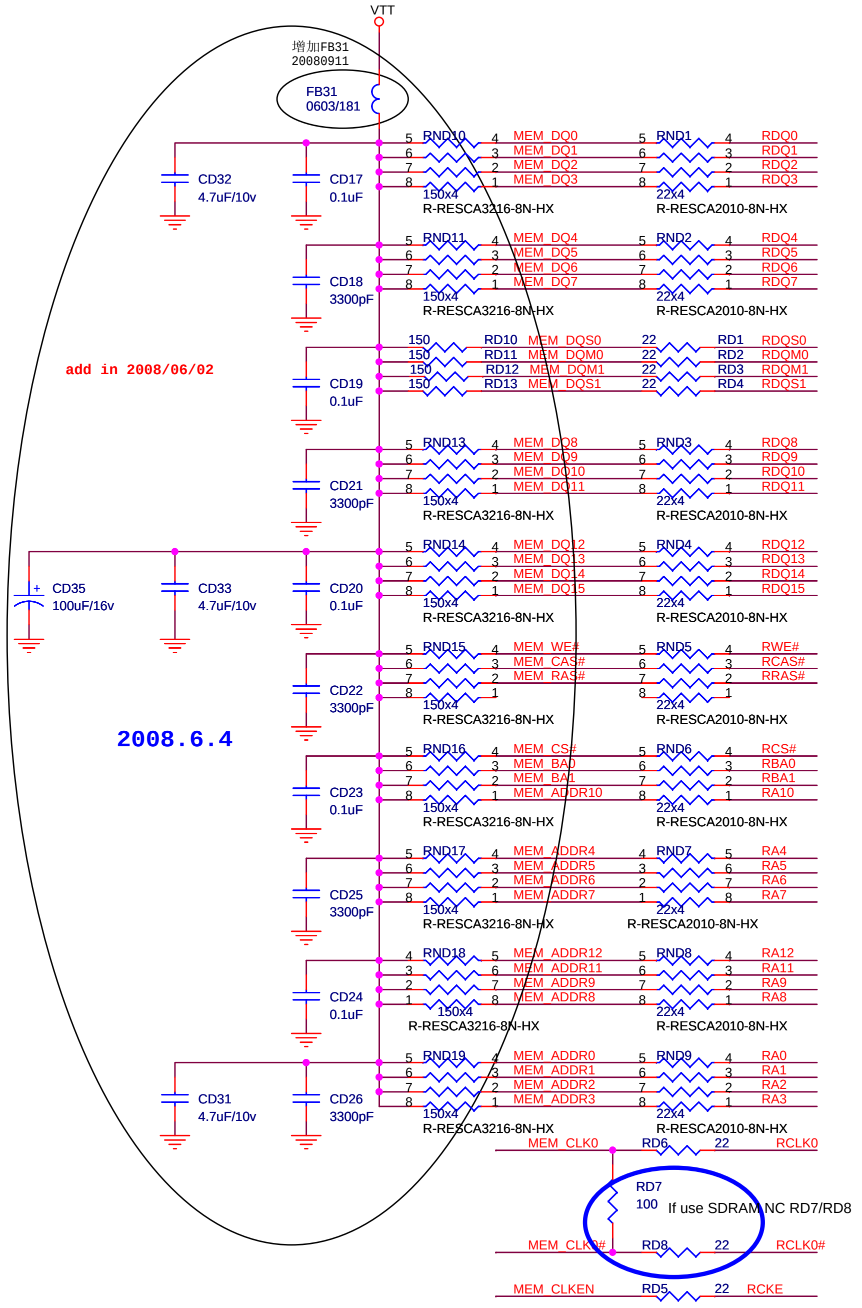
VTT
增加FB31
20080911
FB31
0603/181
add in 2008/06/02
2008.6.4
CD32 4.7uF/10v
CD17 0.1uF
CD18 3300pF
CD19 0.1uF
CD21 3300pF
CD35 100uF/16v
CD33 4.7uF/10v
CD20 0.1uF
CD22 3300pF
CD23 0.1uF
CD25 3300pF
CD24 0.1uF
CD31 4.7uF/10v
CD26 3300pF
RND10 RND11 RND13 RND14 RND15 RND16 RND17 RND18 RND19
150x4
R-RESCA3216-8N-HX
RND1 RND2 RND3 RND4 RND5 RND6 RND7 RND8 RND9
22x4
R-RESCA2010-8N-HX
RD10 RD11 RD12 RD13 150
RD1 RD2 RD3 RD4 22
MEM_DQS0 MEM_DQM0 MEM_DQM1 MEM_DQS1
RDQS0 RDQM0 RDQM1 RDQS1
RDQ0 RDQ1 RDQ2 RDQ3 RDQ4 RDQ5 RDQ6 RDQ7 RDQ8 RDQ9 RDQ10 RDQ11 RDQ12 RDQ13 RDQ14 RDQ15
RWE# RCAS# RRAS# RCS# RBA0 RBA1 RA10
RA4 RA5 RA6 RA7 RA12 RA11 RA9 RA8 RA0 RA1 RA2 RA3
MEM_CLK0 RD6 22 RCLK0
RD7 100
If use SDRAM NC RD7/RD8
MEM_CLK0# RD8 22 RCLK0#
MEM_CLKEN RD5 22 RCKE

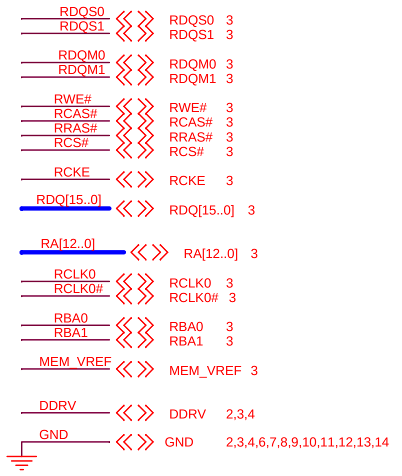
RDQS0 RDQS1 RDQS0 3 RDQS1 3
RDQM0 RDQM1 RDQM0 3 RDQM1 3
RWE# RCAS# RRAS# RCS# RWE# 3 RCAS# 3 RRAS# 3 RCS# 3
RCKE RCKE 3
RDQ[15..0] RDQ[15..0] 3
RA[12..0] RA[12..0] 3
RCLK0 RCLK0# RCLK0 3 RCLK0# 3
RBA0 RBA1 RBA0 3 RBA1 3
MEM_VREF MEM_VREF 3
DDRV DDRV 2,3,4
GND GND 2,3,4,6,7,8,9,10,11,12,13,14

If use sdram CD34 CD26 CD27 RD9 CD28 CD29 CD30 UD2 NC

If use ddr CD34 CD26 CD27 RD9 CD28 CD29 CD30 UD2 ON

LP2996 for Vref and VTT of DDR1

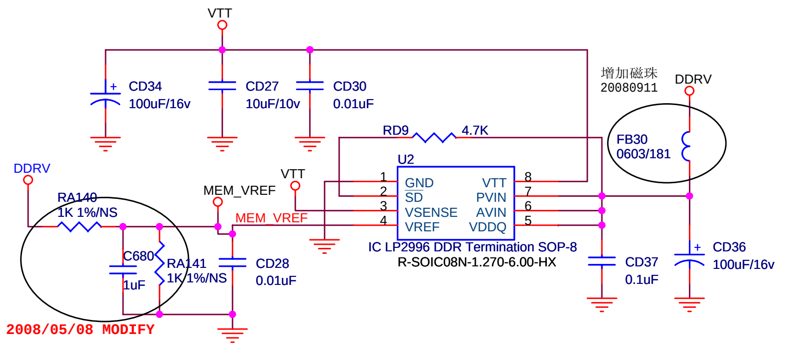
VTT
CD34 100uF/16v
CD27 10uF/10v
CD30 0.01uF
增加磁珠
20080911
DDRV
FB30 0603/181
RD9 4.7K
U2
GND SD VSENSE VREF
VTT PVIN AVIN VDDQ
IC LP2996 DDR Termination SOP-8
R-SOIC08N-1.270-6.00-HX
DDRV
RA140 1K 1%/NS
MEM_VREF
VTT
MEM_VREF
C680 1uF
RA141 1K 1%/NS
CD28 0.01uF
CD37 0.1uF
CD36 100uF/16v
2008/05/08 MODIFY

MediaTek Confidential

MediaTek (ShenZhen) Inc.			
Title: DDR1 DRAM			
Size: C	Document Number: HISENSE_MT8222_EU	Drawn: Jiu.Ni	Rev: 1
Date: 2008/1/25		Sheet 5 of 14	

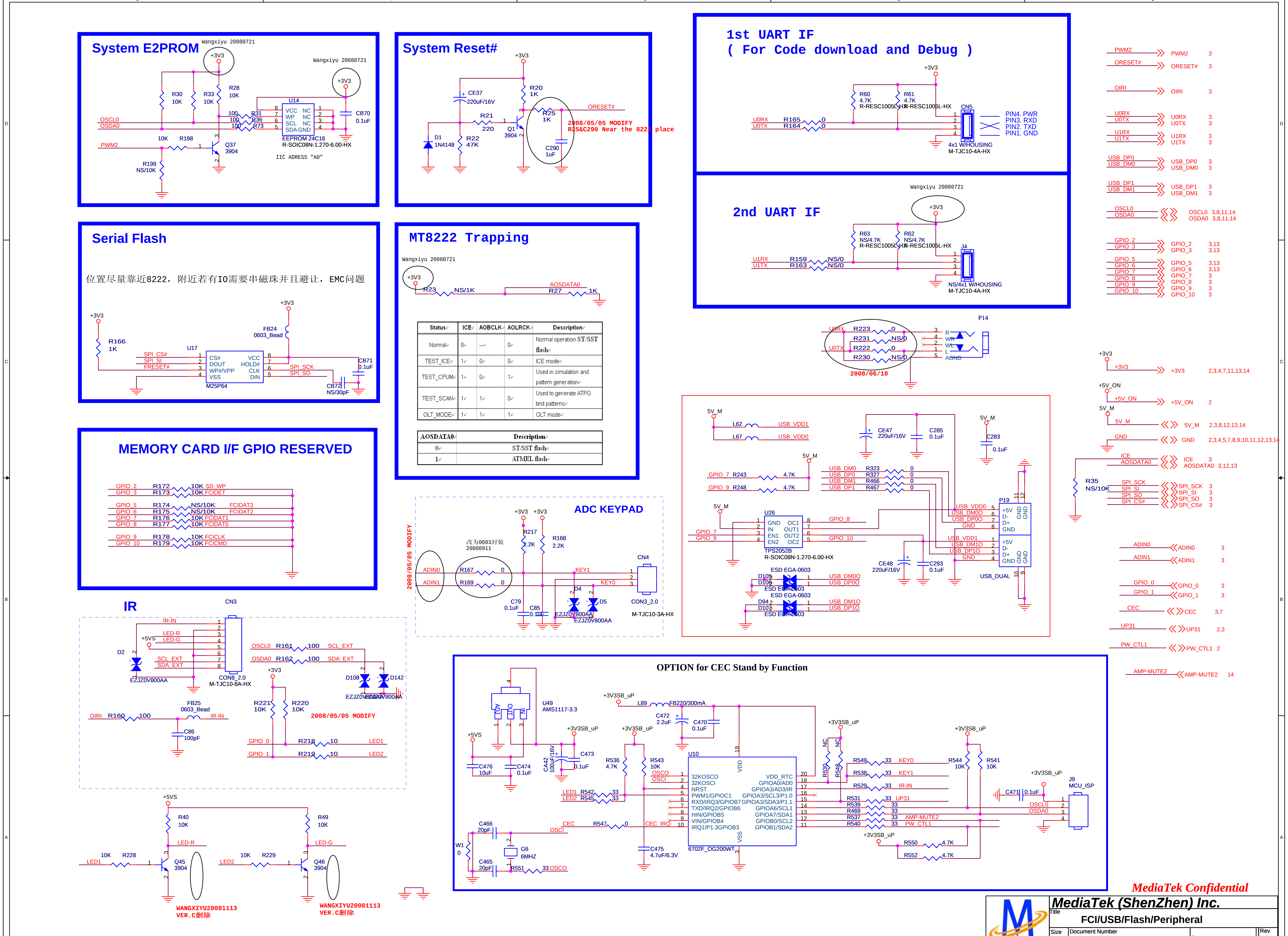
System E2PROM
Wangxiyu 20080721
U14
EEPROM 24C16
R-SOIC08N-1.270-6.00-HX
IIC ADRESS "A0"
Q37 3904
System Reset#
ORESET#
2008/05/05 MODIFY
R25&C290 Near the 8222 place
Q1 3904
D1 1N4148
CE37 220uF/16V
1st UART IF
(For Code download and Debug)
CN5
4x1 W/HOUSING
M-TJC10-4A-HX
PIN4. PWR
PIN3. RXD
PIN2. TXD
PIN1. GND
2nd UART IF
J4
NS/4x1 W/HOUSING
Serial Flash
U17
M25P64
FB24 0603_Bead
MT8222 Trapping
Wangxiyu 20080721
AOSDATA0
R23 NS/1K
R27 1K
MEMORY CARD I/F GPIO RESERVED
ADC KEYPAD
2008/05/05 MODIFY
改为0603封装 20080911
CN4
CON3_2.0
M-TJC10-3A-HX
EZJZ0V800AA
P14
2008/06/10
U26
TPS2052B
R-SOIC08N-1.270-6.00-HX
P19
USB_DUAL
ESD EGA-0603
IR
CN3
CON8_2.0
M-TJC10-8A-HX
FB25 0603_Bead
2008/05/05 MODIFY
Q45 3904
Q46 3904
WANGXIYU20081113
VER.C删除
OPTION for CEC Stand by Function
U49
AMS1117-3.3
U10
6702F_OG200WT
J9
MCU_ISP
G6 6MHZ
L89 FB220/300mA
MediaTek Confidential

位置尽量靠近8222，附近若有IO需要串磁珠并且避让，EMC问题

Status	ICE	AOBCLK	AOLRCK	Description
Normal	0	--	0	Normal operation ST/SST flash
TEST_ICE	1	0	0	ICE mode
TEST_CPUM	1	0	1	Used in simulation and pattern generation
TEST_SCAN	1	1	0	Used to generate ATPG test patterns
OLT_MODE	1	1	1	OLT mode

AOSDATA0	Description
0	ST/SST flash
1	ATMEL flash

MediaTek (ShenZhen) Inc.

Title FCI/USB/Flash/Peripheral

Size	Document Number	Drawn:	Rev
C	HISENSE_MT8222_EU	Jiu.Ni	1

Date: 2008/1/25

Sheet 6 of 14

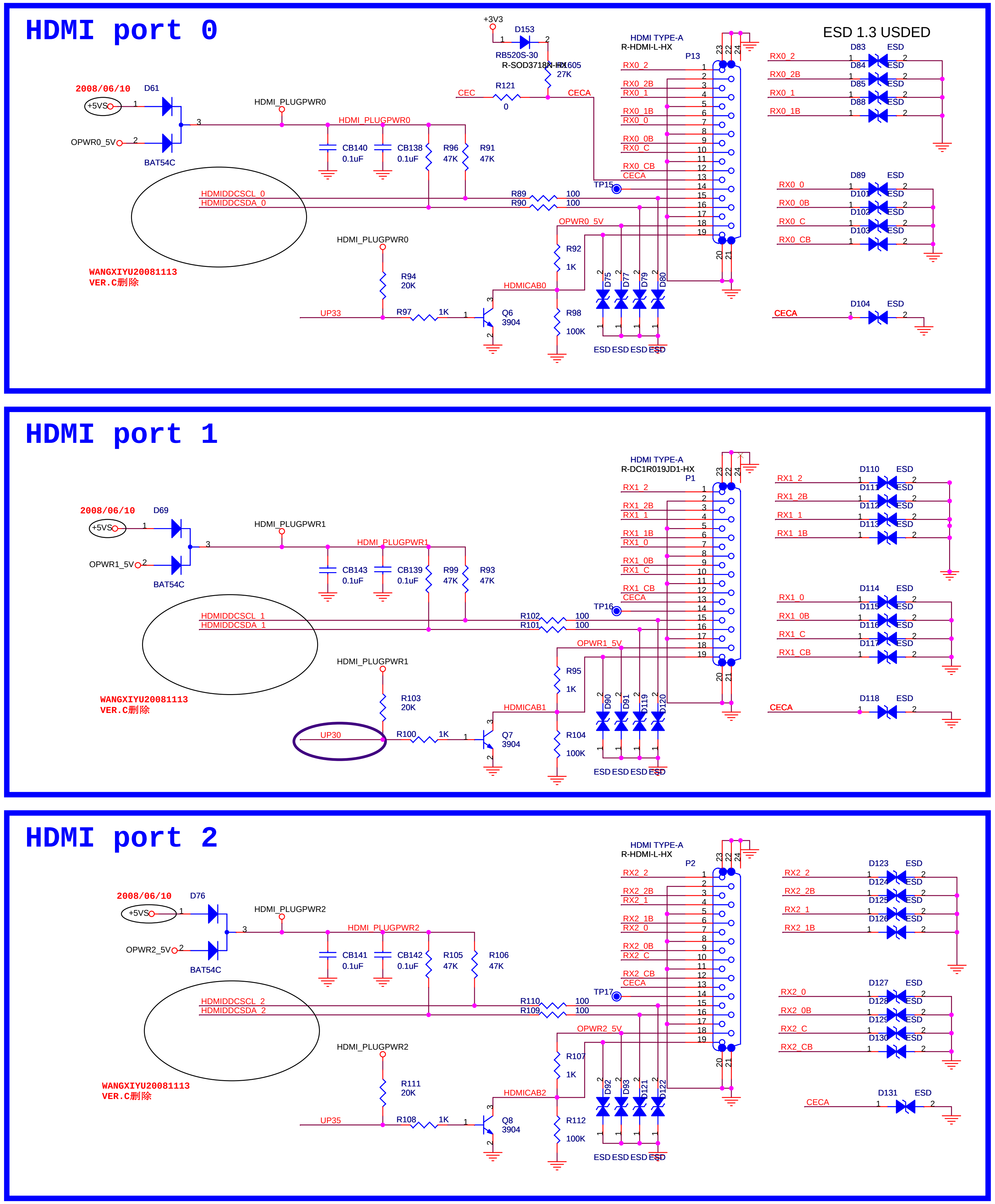
HDMI port 0
+3V3
D153
RB520S-30
R-SOD3718N-HR
R1605
27K
CEC
R121
0
CECA
2008/06/10
D61
+5VS
OPWR0_5V
BAT54C
HDMI_PLUGPWR0
CB140
0.1uF
CB138
0.1uF
R96
47K
R91
47K
HDMIDDCSCL_0
HDMIDDCSDA_0
R89
R90
100
100
TP15
OPWR0_5V
R92
1K
R94
20K
HDMICAB0
UP33
R97
1K
Q6
3904
R98
100K
WANGXIYU20081113
VER.C删除
HDMI TYPE-A
R-HDMI-L-HX
P13
RX0_2
RX0_2B
RX0_1
RX0_1B
RX0_0
RX0_0B
RX0_C
RX0_CB
CECA
D75
D77
D79
D80
ESD ESD ESD ESD
ESD 1.3 USDED
D83
D84
D85
D88
D89
D101
D102
D103
D104
ESD
HDMI port 1
HDMI TYPE-A
R-DC1R019JD1-HX
P1
2008/06/10
D69
+5VS
OPWR1_5V
BAT54C
HDMI_PLUGPWR1
CB143
0.1uF
CB139
0.1uF
R99
47K
R93
47K
HDMIDDCSCL_1
HDMIDDCSDA_1
R102
R101
100
100
TP16
OPWR1_5V
R95
1K
R103
20K
HDMICAB1
UP30
R100
1K
Q7
3904
R104
100K
WANGXIYU20081113
VER.C删除
RX1_2
RX1_2B
RX1_1
RX1_1B
RX1_0
RX1_0B
RX1_C
RX1_CB
CECA
D90
D91
D119
D120
D110
D111
D112
D113
D114
D115
D116
D117
D118
HDMI port 2
HDMI TYPE-A
R-HDMI-L-HX
P2
2008/06/10
D76
+5VS
OPWR2_5V
BAT54C
HDMI_PLUGPWR2
CB141
0.1uF
CB142
0.1uF
R105
47K
R106
47K
HDMIDDCSCL_2
HDMIDDCSDA_2
R110
R109
100
100
TP17
OPWR2_5V
R107
1K
R111
20K
HDMICAB2
UP35
R108
1K
Q8
3904
R112
100K
WANGXIYU20081113
VER.C删除
RX2_2
RX2_2B
RX2_1
RX2_1B
RX2_0
RX2_0B
RX2_C
RX2_CB
CECA
D92
D93
D121
D122
D123
D124
D125
D126
D127
D128
D129
D130
D131

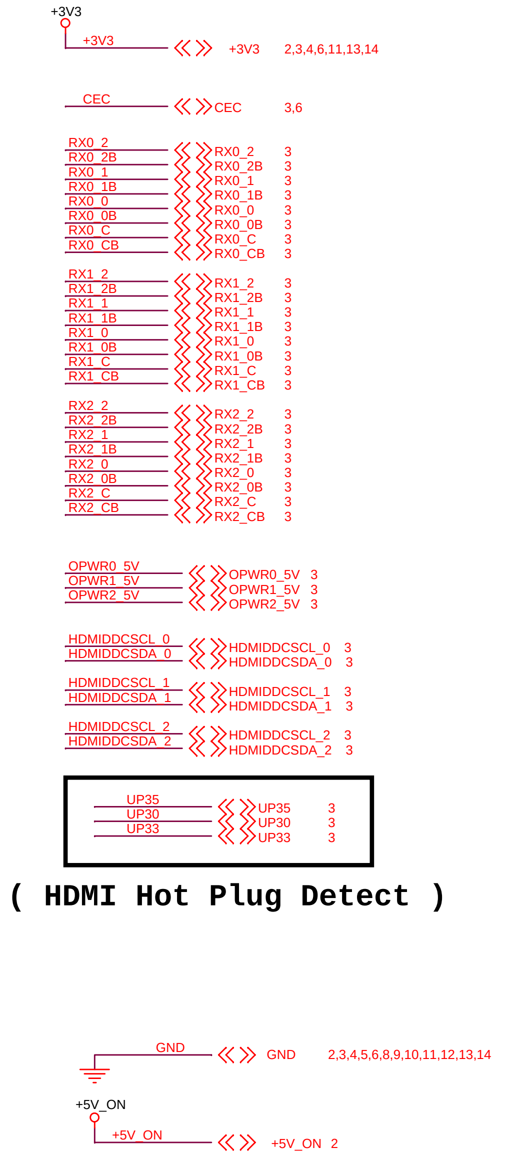
+3V3
+3V3 2,3,4,6,11,13,14
CEC
CEC 3,6
RX0_2 3
RX0_2B 3
RX0_1 3
RX0_1B 3
RX0_0 3
RX0_0B 3
RX0_C 3
RX0_CB 3
RX1_2 3
RX1_2B 3
RX1_1 3
RX1_1B 3
RX1_0 3
RX1_0B 3
RX1_C 3
RX1_CB 3
RX2_2 3
RX2_2B 3
RX2_1 3
RX2_1B 3
RX2_0 3
RX2_0B 3
RX2_C 3
RX2_CB 3
OPWR0_5V 3
OPWR1_5V 3
OPWR2_5V 3
HDMIDDCSCL_0 3
HDMIDDCSDA_0 3
HDMIDDCSCL_1 3
HDMIDDCSDA_1 3
HDMIDDCSCL_2 3
HDMIDDCSDA_2 3
UP35 3
UP30 3
UP33 3
(HDMI Hot Plug Detect)
GND
GND 2,3,4,5,6,8,9,10,11,12,13,14
+5V_ON
+5V_ON 2

1.E2P供电更改
2.各信号上ESD器件更改

MediaTek Confidential

MediaTek (ShenZhen) Inc.

Title
HDMIX3

Size	Document Number		Rev
C	HISENSE_MT8222_EU	Drawn: Jiu.Ni	1
Date: 2008/1/25		Sheet 7 of 14	

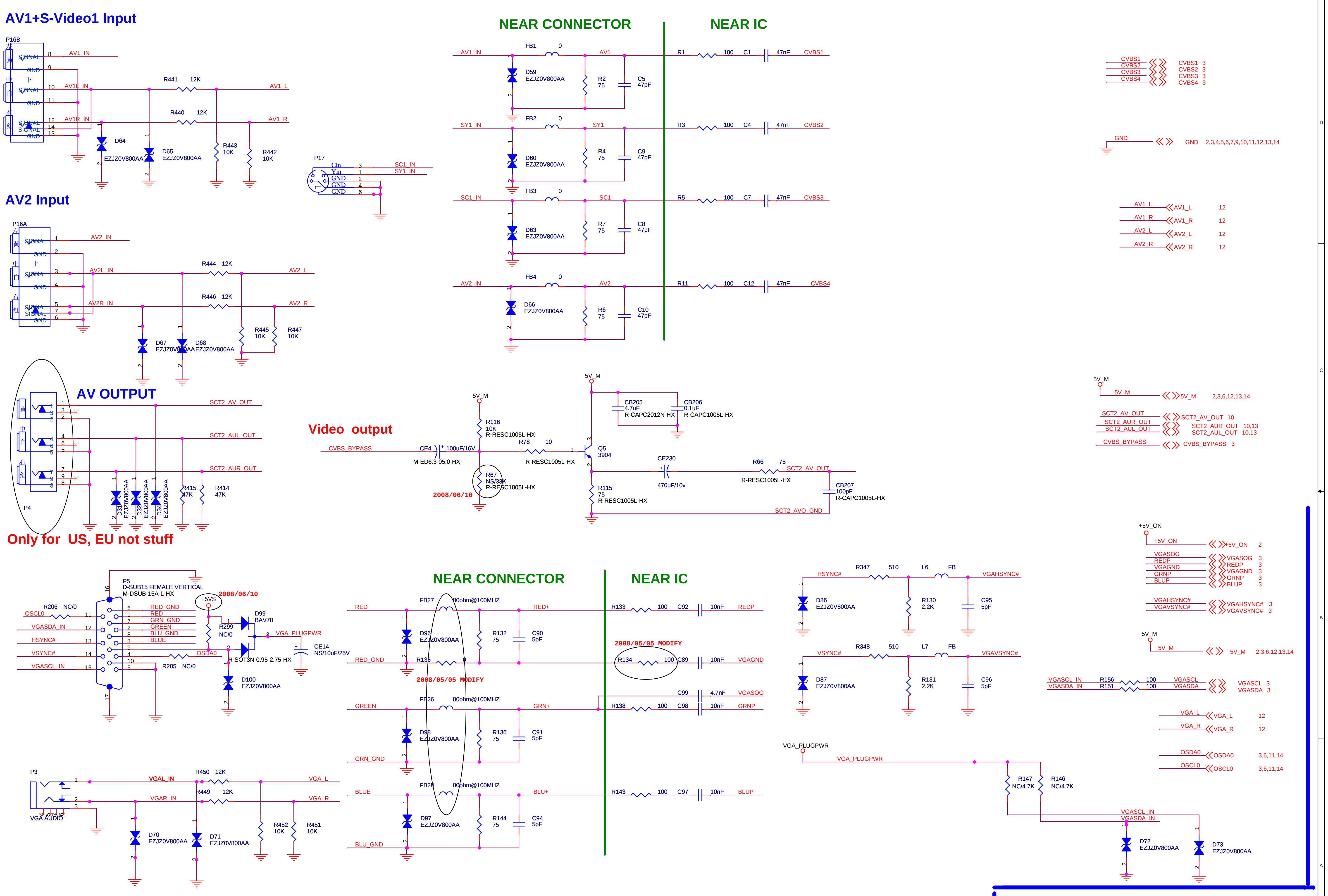

AV1+S-Video1 Input
AV2 Input
AV OUTPUT
Only for US, EU not stuff
Video output
NEAR CONNECTOR
NEAR IC
P16B
P16A
P17
P4
P5
D-SUB15 FEMALE VERTICAL
M-DSUB-15A-L-HX
P3
VGA AUDIO
AV1_IN
AV1L_IN
AV1R_IN
AV1_L
AV1_R
AV2_IN
AV2L_IN
AV2R_IN
AV2_L
AV2_R
SC1_IN
SY1_IN
Cin
Yin
GND
SIGNAL
R441 12K
R440 12K
R443 10K
R442 10K
R444 12K
R446 12K
R445 10K
R447 10K
D64
D65
D67
D68
EZJZ0V800AA
FB1 0
FB2 0
FB3 0
FB4 0
AV1
SY1
SC1
AV2
D59
D60
D63
D66
R2 75
R4 75
R7 75
R6 75
C5 47pF
C9 47pF
C8 47pF
C10 47pF
R1 100 C1 47nF CVBS1
R3 100 C4 47nF CVBS2
R5 100 C7 47nF CVBS3
R11 100 C12 47nF CVBS4
CVBS1 3
CVBS2 3
CVBS3 3
CVBS4 3
GND 2,3,4,5,6,7,9,10,11,12,13,14
AV1_L 12
AV1_R 12
AV2_L 12
AV2_R 12
SCT2_AV_OUT
SCT2_AUL_OUT
SCT2_AUR_OUT
D31
D32
D34
R415 47K
R414 47K
5V_M
R116 10K R-RESC1005L-HX
CVBS_BYPASS
CE4 100uF/16V M-ED6.3-05.0-HX
R78 10 R-RESC1005L-HX
R67 NS/33K R-RESC1005L-HX
2008/06/10
Q5 3904
CB205 4.7uF R-CAPC2012N-HX
CB206 0.1uF R-CAPC1005L-HX
CE230 470uF/10v
R66 75 R-RESC1005L-HX
R115 75 R-RESC1005L-HX
CB207 100pF R-CAPC1005L-HX
SCT2_AVO_GND
5V_M 2,3,6,12,13,14
SCT2_AV_OUT 10
SCT2_AUR_OUT 10,13
SCT2_AUL_OUT 10,13
CVBS_BYPASS 3
+5V_ON 2
VGASOG 3
REDP 3
VGAGND 3
GRNP 3
BLUP 3
VGAHSYNC# 3
VGAVSYNC# 3
OSCL0
VGASDA_IN
HSYNC#
VSYNC#
VGASCL_IN
R206 NC/0
R205 NC/0
RED_GND
RED
GRN_GND
GREEN
BLU_GND
BLUE
OSDA0
+5VS
2008/06/10
R299 NC/0
D99 BAV70
VGA_PLUGPWR
R-SOT3N-0.95-2.75-HX
CE14 NS/10uF/25V
D100 EZJZ0V800AA
FB27 80ohm@100MHZ
FB26 80ohm@100MHZ
FB28 80ohm@100MHZ
RED+
GRN+
BLU+
D96
D98
D97
R132 75
R136 75
R144 75
C90 5pF
C91 5pF
C94 5pF
R135 0
2008/05/05 MODIFY
R133 100 C92 10nF REDP
R134 100 C89 10nF VGAGND
C99 4.7nF VGASOG
R138 100 C98 10nF GRNP
R143 100 C97 10nF BLUP
R347 510 L6 FB VGAHSYNC#
R348 510 L7 FB VGAVSYNC#
D86
D87
R130 2.2K
R131 2.2K
C95 5pF
C96 5pF
VGASCL_IN R156 100 VGASCL 3
VGASDA_IN R151 100 VGASDA 3
VGA_L 12
VGA_R 12
OSDA0 3,6,11,14
OSCL0 3,6,11,14
R147 NC/4.7K
R146 NC/4.7K
D72
D73
VGAL_IN
VGAR_IN
R450 12K
R449 12K
R452 10K
R451 10K
D70
D71

MediaTek Confidential

MediaTek (ShenZhen) Inc.

Title
CVBS/ S-Video / VGA

Size	Document Number	Drawn:	Rev
C	HISENSE_MT8222_EU	Jiu.Ni	1

Date: 2008/1/25 Sheet 8 of 14

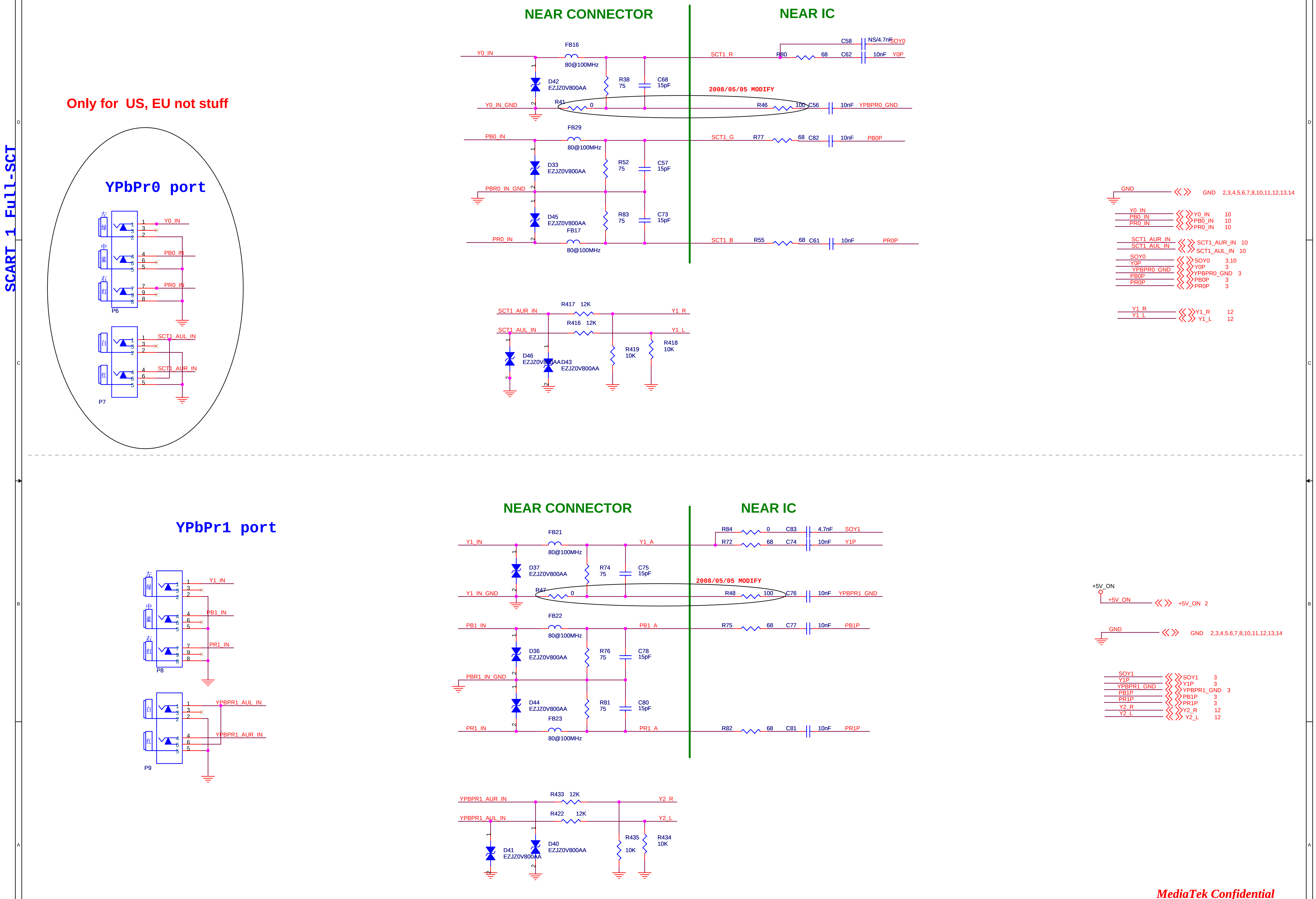
SCART_1 Full-SCT
Only for US, EU not stuff
YPbPr0 port
YPbPr1 port
NEAR CONNECTOR
NEAR IC
2008/05/05 MODIFY
Y0_IN
FB16
80@100MHz
D42
EZJZ0V800AA
R38
75
C68
15pF
Y0_IN_GND
R41
0
SCT1_R
R80
68
C62
10nF
Y0P
C58
NS/4.7nF
SOY0
R46
100
C56
10nF
YPBPR0_GND
PB0_IN
FB29
D33
R52
C57
PBR0_IN_GND
D45
R83
C73
FB17
PR0_IN
SCT1_G
R77
C82
PB0P
SCT1_B
R55
C61
PR0P
SCT1_AUR_IN
R417 12K
Y1_R
SCT1_AUL_IN
R416 12K
Y1_L
D46
D43
R419
10K
R418
10K
P6
P7
SCT1_AUL_IN
SCT1_AUR_IN
PB0_IN
PR0_IN
Y0_IN
GND
GND 2,3,4,5,6,7,8,10,11,12,13,14
Y0_IN 10
PB0_IN 10
PR0_IN 10
SCT1_AUR_IN 10
SCT1_AUL_IN 10
SOY0 3,10
Y0P 3
YPBPR0_GND 3
PB0P 3
PR0P 3
Y1_R 12
Y1_L 12
Y1_IN
FB21
D37
R74
C75
Y1_A
R84
0
C83
4.7nF
SOY1
R72
68
C74
10nF
Y1P
Y1_IN_GND
R47
R48
100
C76
YPBPR1_GND
PB1_IN
FB22
D36
R76
C78
PB1_A
R75
C77
PB1P
PBR1_IN_GND
D44
R81
C80
FB23
PR1_IN
PR1_A
R82
C81
PR1P
P8
P9
YPBPR1_AUL_IN
YPBPR1_AUR_IN
R433 12K
Y2_R
R422 12K
Y2_L
D41
D40
R435
10K
R434
10K
+5V_ON
+5V_ON 2
GND 2,3,4,5,6,7,8,10,11,12,13,14
SOY1 3
Y1P 3
YPBPR1_GND 3
PB1P 3
PR1P 3
Y2_R 12
Y2_L 12
左
中
右
白
红
蓝

MediaTek Confidential

MediaTek (ShenZhen) Inc.

Title	YPbPr		
Size C	Document Number HISENSE_MT8222_EU	Drawn: Jiu.Ni	Rev 1
Date: 2008/1/25		Sheet 9 of 14	

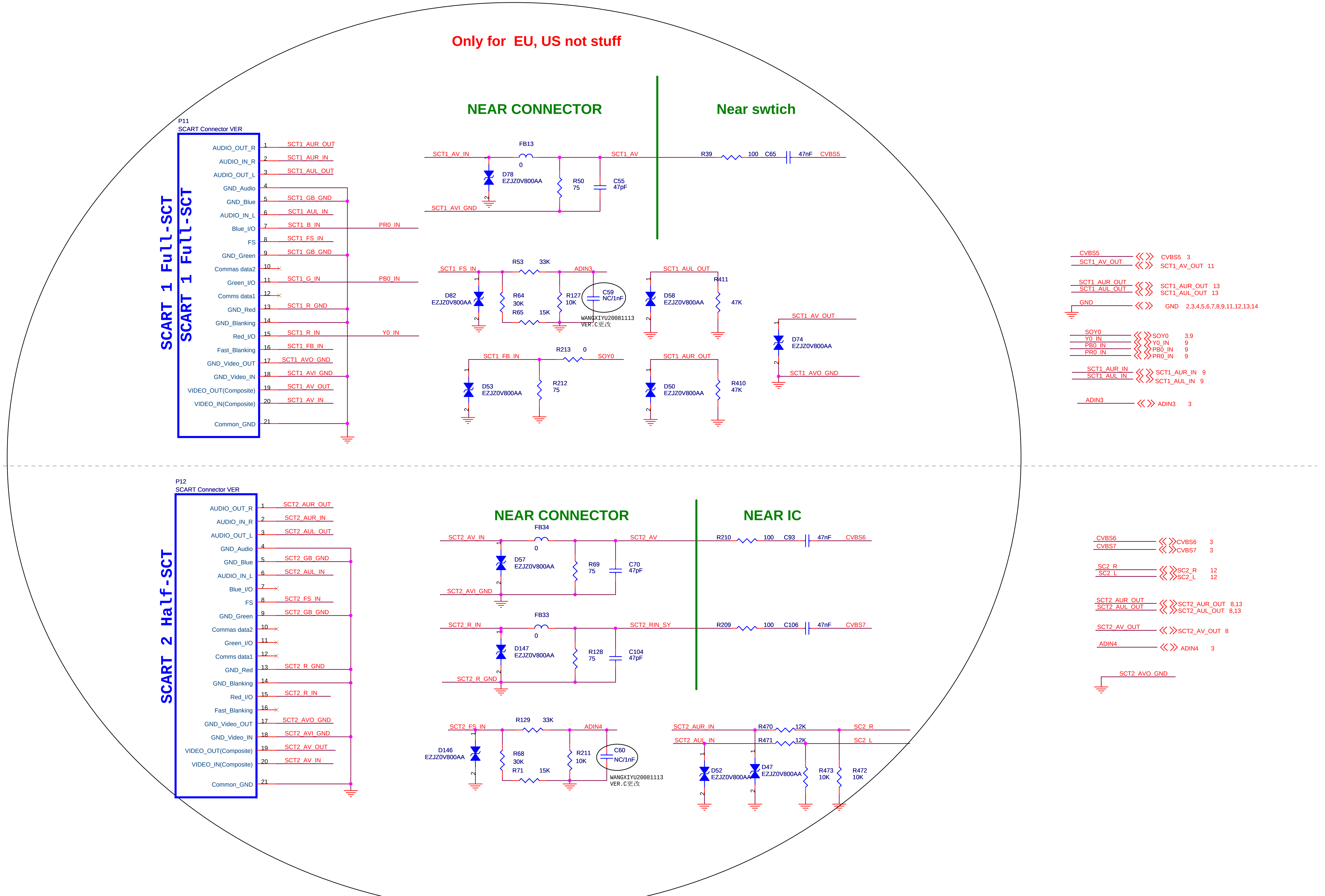
Only for EU, US not stuff
NEAR CONNECTOR
Near swtich
P11
SCART Connector VER
SCART 1 Full-SCT
SCART 1 Full-SCT
AUDIO_OUT_R
AUDIO_IN_R
AUDIO_OUT_L
GND_Audio
GND_Blue
AUDIO_IN_L
Blue_I/O
FS
GND_Green
Commas data2
Green_I/O
Comms data1
GND_Red
GND_Blanking
Red_I/O
Fast_Blanking
GND_Video_OUT
GND_Video_IN
VIDEO_OUT(Composite)
VIDEO_IN(Composite)
Common_GND
SCT1_AUR_OUT
SCT1_AUR_IN
SCT1_AUL_OUT
SCT1_GB_GND
SCT1_AUL_IN
SCT1_B_IN
SCT1_FS_IN
SCT1_GB_GND
SCT1_G_IN
SCT1_R_GND
SCT1_R_IN
SCT1_FB_IN
SCT1_AVO_GND
SCT1_AVI_GND
SCT1_AV_OUT
SCT1_AV_IN
PR0_IN
PB0_IN
Y0_IN
SCT1_AV_IN
FB13
0
D78
EZJZ0V800AA
R50
75
C55
47pF
SCT1_AV
SCT1_AVI_GND
R39
100
C65
47nF
CVBS5
SCT1_FS_IN
R53
33K
ADIN3
D82
EZJZ0V800AA
R64
30K
R65
15K
R127
10K
C59
NC/1nF
WANGXIYU20081113
VER.C更改
SCT1_AUL_OUT
R411
D58
EZJZ0V800AA
47K
SCT1_AV_OUT
D74
EZJZ0V800AA
SCT1_AVO_GND
SCT1_FB_IN
R213
0
SOY0
D53
EZJZ0V800AA
R212
75
SCT1_AUR_OUT
D50
EZJZ0V800AA
R410
47K
CVBS5
SCT1_AV_OUT
CVBS5 3
SCT1_AV_OUT 11
SCT1_AUR_OUT
SCT1_AUL_OUT
SCT1_AUR_OUT 13
SCT1_AUL_OUT 13
GND
GND 2,3,4,5,6,7,8,9,11,12,13,14
SOY0
Y0_IN
PB0_IN
PR0_IN
SOY0 3,9
Y0_IN 9
PB0_IN 9
PR0_IN 9
SCT1_AUR_IN
SCT1_AUL_IN
SCT1_AUR_IN 9
SCT1_AUL_IN 9
ADIN3
ADIN3 3
P12
SCART Connector VER
SCART 2 Half-SCT
SCT2_AUR_OUT
SCT2_AUR_IN
SCT2_AUL_OUT
SCT2_GB_GND
SCT2_AUL_IN
SCT2_FS_IN
SCT2_GB_GND
SCT2_R_GND
SCT2_R_IN
SCT2_AVO_GND
SCT2_AVI_GND
SCT2_AV_OUT
SCT2_AV_IN
NEAR CONNECTOR
NEAR IC
SCT2_AV_IN
FB34
0
D57
EZJZ0V800AA
R69
75
C70
47pF
SCT2_AV
R210
100
C93
47nF
CVBS6
SCT2_AVI_GND
SCT2_R_IN
FB33
0
D147
EZJZ0V800AA
R128
75
C104
47pF
SCT2_RIN_SY
R209
100
C106
47nF
CVBS7
SCT2_R_GND
SCT2_FS_IN
R129
33K
ADIN4
D146
EZJZ0V800AA
R68
30K
R71
15K
R211
10K
C60
NC/1nF
WANGXIYU20081113
VER.C更改
SCT2_AUR_IN
SCT2_AUL_IN
R470
12K
R471
12K
SC2_R
SC2_L
D52
EZJZ0V800AA
D47
EZJZ0V800AA
R473
10K
R472
10K
CVBS6
CVBS7
CVBS6 3
CVBS7 3
SC2_R
SC2_L
SC2_R 12
SC2_L 12
SCT2_AUR_OUT
SCT2_AUL_OUT
SCT2_AUR_OUT 8,13
SCT2_AUL_OUT 8,13
SCT2_AV_OUT
SCT2_AV_OUT 8
ADIN4
ADIN4 3
SCT2_AVO_GND

MediaTek Confidential

MediaTek (ShenZhen) Inc.

Title	SCART1/2		
Size C	Document Number HISENSE_MT8222_EU	Drawn: Jiu.Ni	Rev 1
Date:		Sheet 10 of 14	

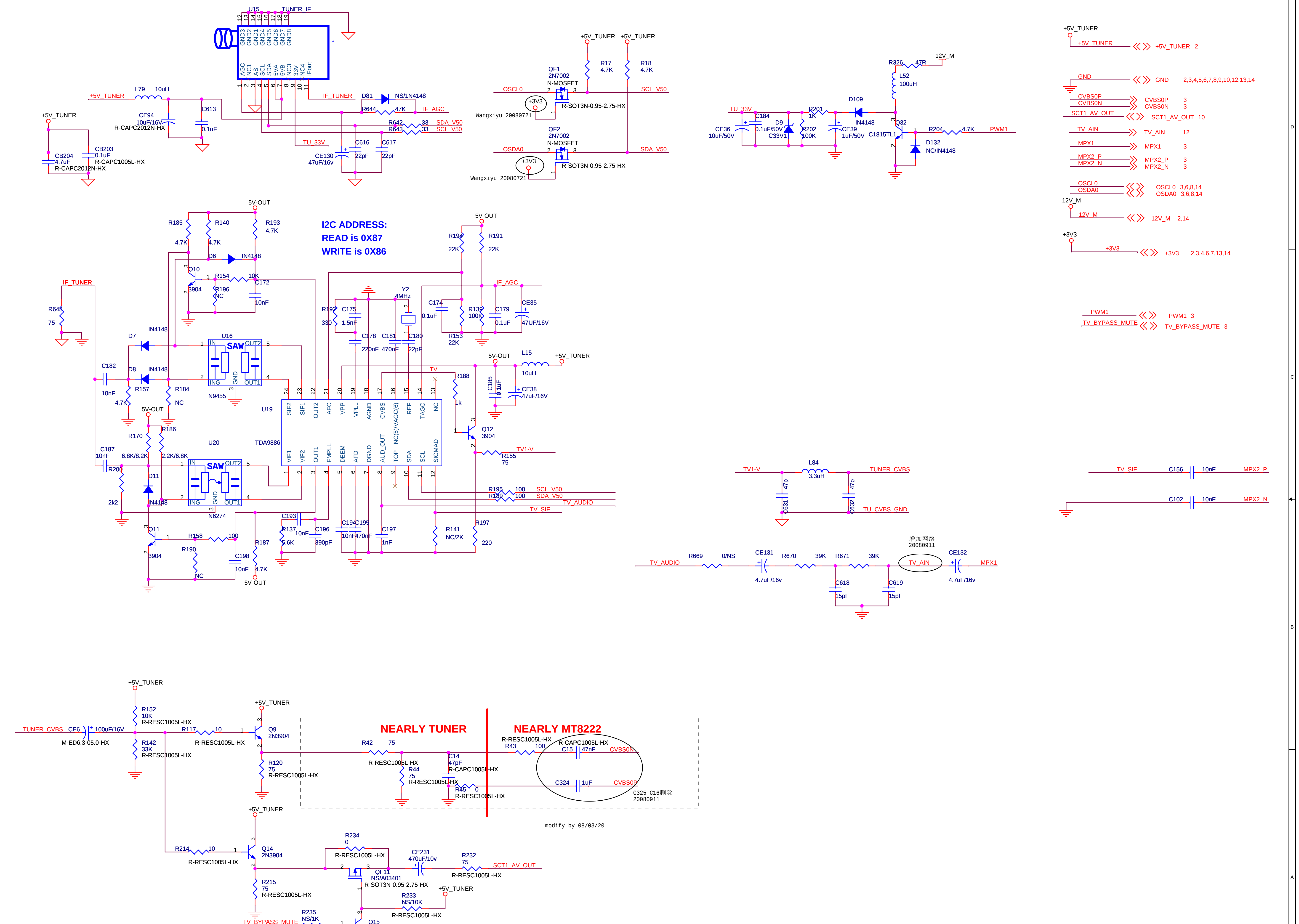
U15
TUNER_IF
GND3 GND2 GND1 GND4 GND5 GND6 GND7 GND8
AGC NC1 AS SCL SDA 5VA 5VB NC3 33V NC4 IFout
+5V_TUNER
L79 10uH
CE94 10uF/16V R-CAPC2012N-HX
C613 0.1uF
CB204 4.7uF R-CAPC2012N-HX
CB203 0.1uF R-CAPC1005L-HX
IF_TUNER
D81 NS/1N4148
R644 47K
IF_AGC
R642 33 SDA_V50
R643 33 SCL_V50
TU_33V
C616 22pF
C617 22pF
CE130 47uF/16v
QF1 2N7002 N-MOSFET
R-SOT3N-0.95-2.75-HX
OSCL0
SCL_V50
R17 4.7K
R18 4.7K
Wangxiyu 20080721
QF2 2N7002 N-MOSFET
OSDA0
SDA_V50
+3V3
R326 47R
12V_M
L52 100uH
D109
IN4148
Q32 C1815TL1
R204 4.7K
PWM1
D132 NC/IN4148
TU_33V
C184 0.1uF/50V
CE36 10uF/50V
D9 C33V1
R201 1K
R202 100K
CE39 1uF/50V
+5V_TUNER 2
GND 2,3,4,5,6,7,8,9,10,12,13,14
CVBS0P 3
CVBS0N 3
SCT1_AV_OUT 10
TV_AIN 12
MPX1 3
MPX2_P 3
MPX2_N 3
OSCL0 3,6,8,14
OSDA0 3,6,8,14
12V_M 2,14
+3V3 2,3,4,6,7,13,14
PWM1 3
TV_BYPASS_MUTE 3
I2C ADDRESS:
READ is 0X87
WRITE is 0X86
5V-OUT
R185 4.7K
R140 4.7K
R193 4.7K
D6 IN4148
Q10 3904
R154 10K
R196 NC
C172 10nF
R648 75
D7 IN4148
D8 IN4148
C182 10nF
R157 4.7K
R184 NC
U16 SAW IN OUT2 ING GND OUT1 N9455
U19 TDA9886
SIF2 SIF1 OUT2 AFC VPP VPLL AGND CVBS NC(5)/VAGC(6) REF TAGC NC
VIF1 VIF2 OUT1 FMPLL DEEM AFD DGND AUD_OUT TOP SDA SCL SIOMAD
R192 330
C175 1.5nF
C178 220nF
C181 470nF
Y2 4MHz
C180 22pF
C174 0.1uF
R139 100K
R153 22K
C179 0.1uF
CE35 47UF/16V
R194 22K
R191 22K
TV
R188 1k
C185 0.1uF
L15 10uH
CE38 47uF/16V
Q12 3904
R155 75
TV1-V
U20 SAW N6274
R170 6.8K/8.2K
R186 2.2K/6.8K
C187 10nF
R200 2k2
D11 IN4148
Q11 3904
R158 100
R190 NC
C198 10nF
R187 4.7K
C193 10nF
R137 5.6K
C196 390pF
C194 10nF
C195 470nF
C197 1nF
R141 NC/2K
R197 220
R195 100 SCL_V50
R189 100 SDA_V50
TV_AUDIO
TV_SIF
L84 3.3uH
TUNER_CVBS
C631 47p
C632 47p
TU_CVBS_GND
TV_SIF C156 10nF MPX2_P
C102 10nF MPX2_N
增加网络 20080911
TV_AUDIO R669 0/NS CE131 4.7uF/16v R670 39K R671 39K TV_AIN CE132 4.7uF/16v MPX1
C618 15pF
C619 15pF
TUNER_CVBS CE6 100uF/16V M-ED6.3-05.0-HX
R152 10K R-RESC1005L-HX
R142 33K R-RESC1005L-HX
R117 10 R-RESC1005L-HX
Q9 2N3904
R120 75 R-RESC1005L-HX
NEARLY TUNER
NEARLY MT8222
R42 75 R-RESC1005L-HX
R44 75 R-RESC1005L-HX
C14 47pF R-CAPC1005L-HX
R45 0 R-RESC1005L-HX
R43 100 R-RESC1005L-HX
C15 47nF R-CAPC1005L-HX CVBS0N
C324 1uF CVBS0P
C325 C16删除 20080911
modify by 08/03/20
R214 10 R-RESC1005L-HX
Q14 2N3904
R215 75 R-RESC1005L-HX
R234 0 R-RESC1005L-HX
QF11 NS/A03401 R-SOT3N-0.95-2.75-HX
CE231 470uF/10v
R232 75 R-RESC1005L-HX
SCT1_AV_OUT
R233 NS/10K R-RESC1005L-HX
R235 NS/1K R-RESC1005L-HX
TV_BYPASS_MUTE
Q15 NS/2N3904
5 4 3 2 1
A B C D

MediaTek Confidential

MediaTek (ShenZhen) Inc.

Title
RF Tuner

Size	Document Number	Drawn:	Rev
C	HISENSE_MT8222_EU	Jiu.Ni	1
Date: 2008/1/25		Sheet 11 of 14	

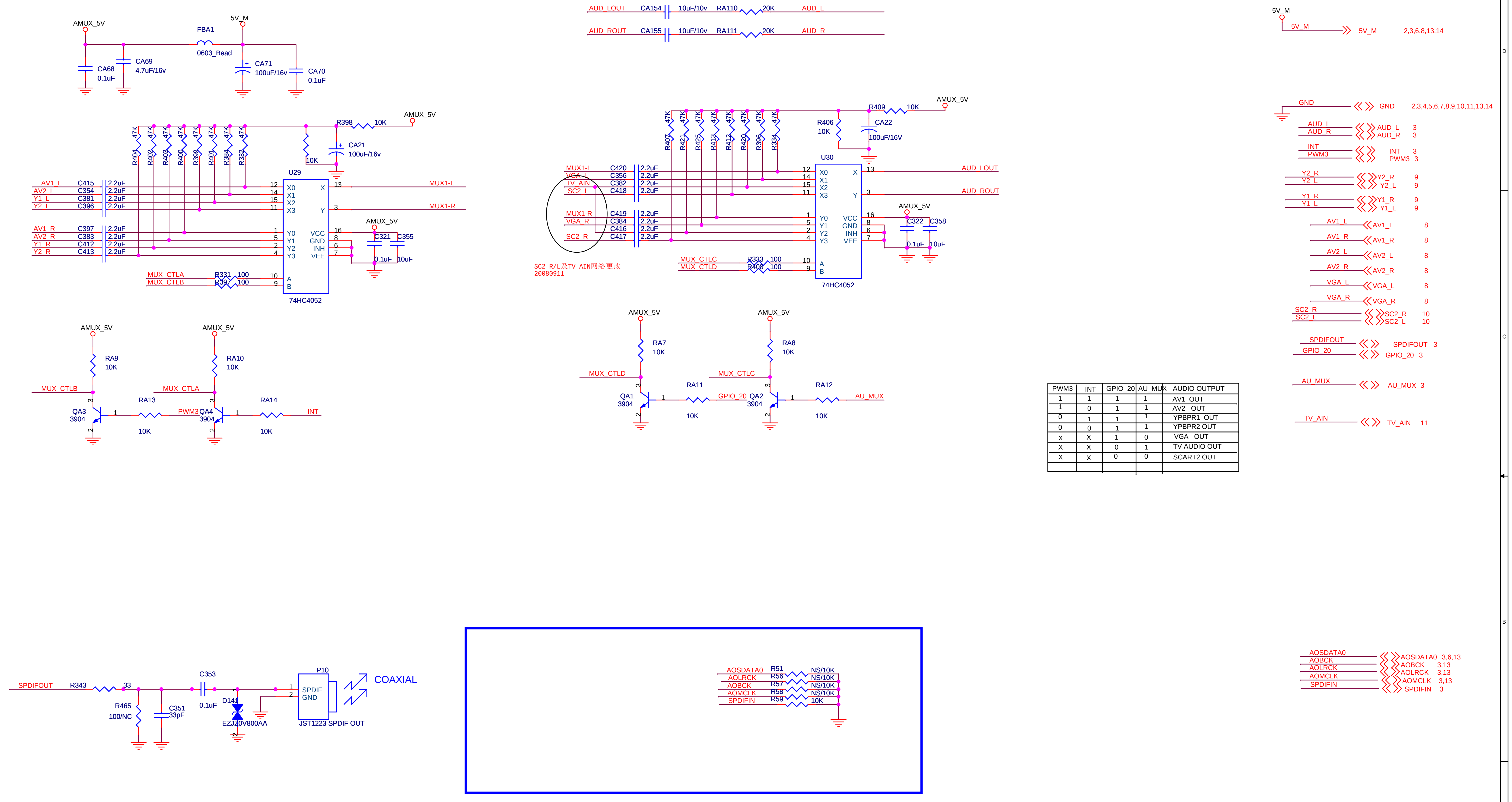
AMUX_5V
5V_M
FBA1
0603_Bead
CA68
0.1uF
CA69
4.7uF/16v
CA71
100uF/16v
CA70
0.1uF
AUD_LOUT
CA154
10uF/10v
RA110
20K
AUD_L
AUD_ROUT
CA155
10uF/10v
RA111
20K
AUD_R
5V_M
5V_M 2,3,6,8,13,14
GND
GND 2,3,4,5,6,7,8,9,10,11,13,14
AUD_L 3
AUD_R 3
INT 3
PWM3 3
Y2_R 9
Y2_L 9
Y1_R 9
Y1_L 9
AV1_L 8
AV1_R 8
AV2_L 8
AV2_R 8
VGA_L 8
VGA_R 8
SC2_R 10
SC2_L 10
SPDIFOUT 3
GPIO_20 3
AU_MUX 3
TV_AIN 11
R404 R402 R403 R400 R399 R401 R384 R332
47K
R398
10K
CA21
100uF/16v
U29
74HC4052
AV1_L C415 2.2uF
AV2_L C354 2.2uF
Y1_L C381 2.2uF
Y2_L C396 2.2uF
AV1_R C397 2.2uF
AV2_R C383 2.2uF
Y1_R C412 2.2uF
Y2_R C413 2.2uF
X0 X1 X2 X3 X Y
Y0 Y1 Y2 Y3
VCC GND INH VEE
A B
MUX1-L
MUX1-R
C321
C355
0.1uF
10uF
MUX_CTLA R331 100
MUX_CTLB R397 100
R407 R421 R425 R413 R412 R420 R396 R334
47K
R409
10K
R406
10K
CA22
100uF/16v
U30
74HC4052
MUX1-L C420 2.2uF
VGA_L C356 2.2uF
TV_AIN C382 2.2uF
SC2_L C418 2.2uF
MUX1-R C419 2.2uF
VGA_R C384 2.2uF
C416 2.2uF
SC2_R C417 2.2uF
AUD_LOUT
AUD_ROUT
C322
C358
0.1uF
10uF
MUX_CTLC R333 100
MUX_CTLD R408 100
RA9 10K
RA10 10K
MUX_CTLB
MUX_CTLA
QA3 3904
QA4 3904
RA13 10K
RA14 10K
PWM3
INT
RA7 10K
RA8 10K
MUX_CTLD
MUX_CTLC
QA1 3904
QA2 3904
RA11 10K
RA12 10K
GPIO_20
AU_MUX
SPDIFOUT
R343
33
R465
100/NC
C351
33pF
C353
0.1uF
D141
EZJ20V800AA
P10
SPDIF
GND
JST1223 SPDIF OUT
COAXIAL
AOSDATA0 R51 NS/10K
AOLRCK R56 NS/10K
AOBCK R57 NS/10K
AOMCLK R58 NS/10K
SPDIFIN R59 10K
AOSDATA0 3,6,13
AOBCK 3,13
AOLRCK 3,13
AOMCLK 3,13
SPDIFIN 3

SC2_R/L及TV_AIN网络更改
20080911

PWM3	INT	GPIO_20	AU_MUX	AUDIO OUTPUT
1	1	1	1	AV1 OUT
1	0	1	1	AV2 OUT
0	1	1	1	YPBPR1 OUT
0	0	1	1	YPBPR2 OUT
X	X	1	0	VGA OUT
X	X	0	1	TV AUDIO OUT
X	X	0	0	SCART2 OUT

MediaTek Confidential

MediaTek (ShenZhen) Inc.	
Title	AudioMUX/SPDIF
Size	C
Document Number	HISENSE_MT8222_EU
Drawn:	Jiu.Ni
Rev	1
Date:	2008/1/25
Sheet	12 of 14

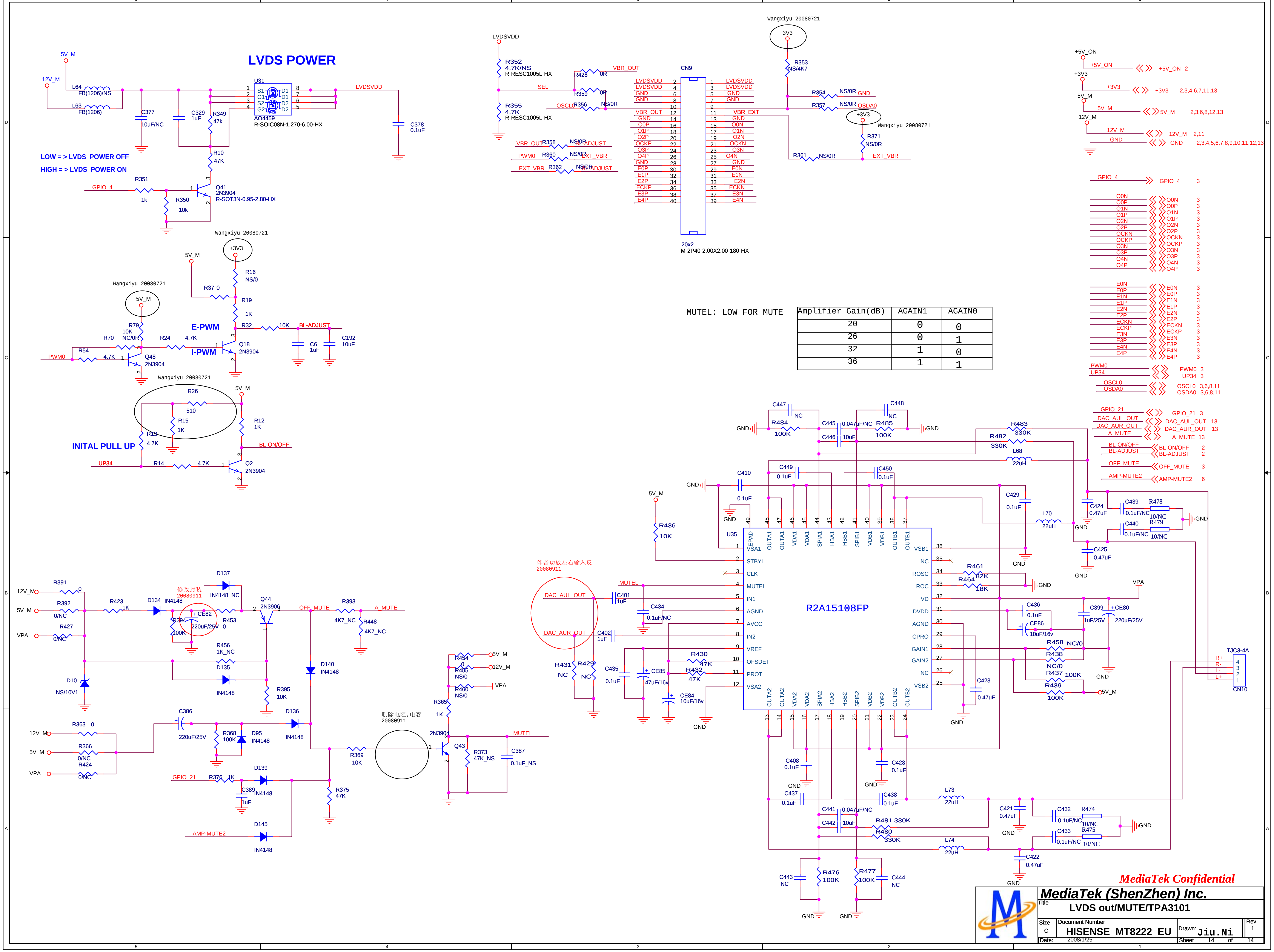
LVDS POWER
5V_M
12V_M
L64 FB(1206)/NS
L63 FB(1206)
C377 10uF/NC
C329 1uF
R349 47k
U31
AO4459
R-SOIC08N-1.270-6.00-HX
LVDSVDD
C378 0.1uF
R10 47K
LOW = > LVDS POWER OFF
HIGH = > LVDS POWER ON
R351 1k
GPIO_4
R350 10k
Q41 2N3904
R-SOT3N-0.95-2.80-HX
LVDSVDD
R352 4.7K/NS
R-RESC1005L-HX
SEL
R355 4.7K
R-RESC1005L-HX
R428 0R
VBR_OUT
R359 0R
OSCL0
R356 NS/0R
CN9
20x2
M-2P40-2.00X2.00-180-HX
VBR_OUT R358 NS/0R BL-ADJUST
PWM0 R360 NS/0R EXT_VBR
EXT_VBR R362 NS/0R BL-ADJUST
Wangxiyu 20080721
+3V3
R353 NS/4K7
R354 NS/0R GND
R357 NS/0R OSDA0
R371 NS/0R
R361 NS/0R EXT_VBR
5V_M
R16 NS/0
R37 0
R19 1K
R32 10K BL-ADJUST
E-PWM
I-PWM
R79 10K
R70 NC/0R
R24 4.7K
R54 4.7K
PWM0
Q48 2N3904
Q18 2N3904
C6 1uF
C192 10uF
R26 510
R15 1K
R13 4.7K
R12 1K
BL-ON/OFF
INITAL PULL UP
UP34
R14 4.7K
Q2 2N3904
MUTEL: LOW FOR MUTE
R391 0
R392 0/NC
R427 0/NC
12V_M
5V_M
VPA
R423 1K
D134 IN4148
D137 IN4148_NC
修改封装 20080911
R394 100K
CE82 220uF/25V
R453 0
Q44 2N3906
OFF_MUTE
R393 4K7_NC
A_MUTE
R448 4K7_NC
R456 1K_NC
D135 IN4148
D10 NS/10V1
R395 10K
D140 IN4148
C386 220uF/25V
D136 IN4148
R363 0
R366 0/NC
R424 0/NC
R368 100K
D95 IN4148
GPIO_21
R376 1K
D139 IN4148
C389 1uF
R369 10K
R375 47K
D145 IN4148
AMP-MUTE2
删除电阻,电容 20080911
R454 0
R455 NS/0
R480 NS/0
R365 1K
2N3904
Q43
R373 47K_NS
C387 0.1uF_NS
MUTEL
伴音功放左右输入反 20080911
DAC_AUL_OUT
DAC_AUR_OUT
R431 NC
R429 NC
C401 1uF
C402 1uF
C434 0.1uF/NC
C435 0.1uF
CE85 47uF/16v
CE84 10uF/16v
R430 47K
R432 47K
R436 10K
U35
R2A15108FP
R461 82K
R464 18K
C436 0.1uF
CE86 10uF/16v
C399 1uF/25V
CE80 220uF/25V
R458 NC/0
R438 NC/0
R437 100K
R439 100K
C423 0.47uF
C447 NC
C448 NC
R484 100K
R485 100K
C445 0.047uF/NC
C446 10uF
R483 330K
R482 330K
L68 22uH
C449 0.1uF
C450 0.1uF
C410 0.1uF
C429 0.1uF
L70 22uH
C424 0.47uF
C425 0.47uF
C439 0.1uF/NC
R478 10/NC
C440 0.1uF/NC
R479 10/NC
TJC3-4A
CN10
R+
R-
L-
L+
C408 0.1uF
C428 0.1uF
C437 0.1uF
C438 0.1uF
L73 22uH
C441 0.047uF/NC
C442 10uF
R481 330K
R480 330K
L74 22uH
C421 0.47uF
C422 0.47uF
C432 0.1uF/NC
R474 10/NC
C433 0.1uF/NC
R475 10/NC
R476 100K
R477 100K
C443 NC
C444 NC
+5V_ON 2
+3V3 2,3,4,6,7,11,13
5V_M 2,3,6,8,12,13
12V_M 2,11
GND 2,3,4,5,6,7,8,9,10,11,12,13
GPIO_4 3
O0N O0P O1N O1P O2N O2P OCKN OCKP O3N O3P O4N O4P 3
E0N E0P E1N E1P E2N E2P ECKN ECKP E3N E3P E4N E4P 3
PWM0 3
UP34 3
OSCL0 3,6,8,11
OSDA0 3,6,8,11
GPIO_21 3
DAC_AUL_OUT 13
DAC_AUR_OUT 13
A_MUTE 13
BL-ON/OFF 2
BL-ADJUST 2
OFF_MUTE 3
AMP-MUTE2 6

MUTEL: LOW FOR MUTE

Amplifier Gain(dB)	AGAIN1	AGAIN0
20	0	0
26	0	1
32	1	0
36	1	1

MediaTek Confidential

MediaTek (ShenZhen) Inc.

Title
LVDS out/MUTE/TPA3101

Size C
Document Number HISENSE_MT8222_EU
Drawn: Jiu.Ni
Rev 1
Date: 2008/1/25
Sheet 14 of 14