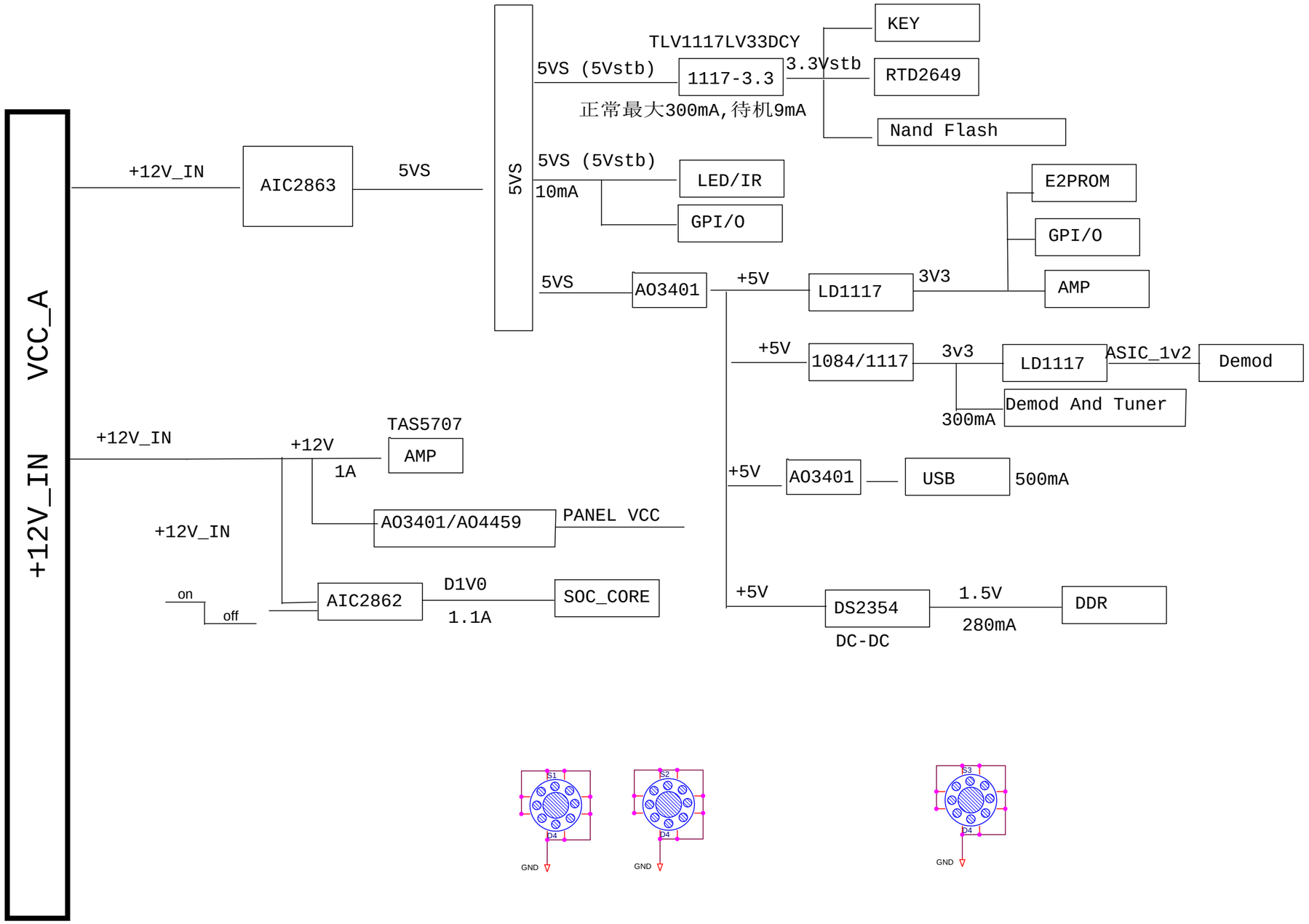
+12V_IN VCC_A
+12V_IN
AIC2863
5VS
5VS
5VS (5Vstb)
TLV1117LV33DCY
1117-3.3
3.3Vstb
KEY
RTD2649
Nand Flash
正常最大300mA,待机9mA
5VS (5Vstb)
10mA
LED/IR
GPI/O
5VS
AO3401
+5V
LD1117
3V3
E2PROM
GPI/O
AMP
+5V
1084/1117
3v3
LD1117
ASIC_1v2
Demod
300mA
Demod And Tuner
+12V_IN
+12V
TAS5707
AMP
1A
AO3401/AO4459
PANEL VCC
+5V
AO3401
USB
500mA
+12V_IN
on
off
AIC2862
D1V0
1.1A
SOC_CORE
+5V
DS2354
DC-DC
1.5V
280mA
DDR
S1
D4
GND
S2
D4
GND
S3
D4
GND

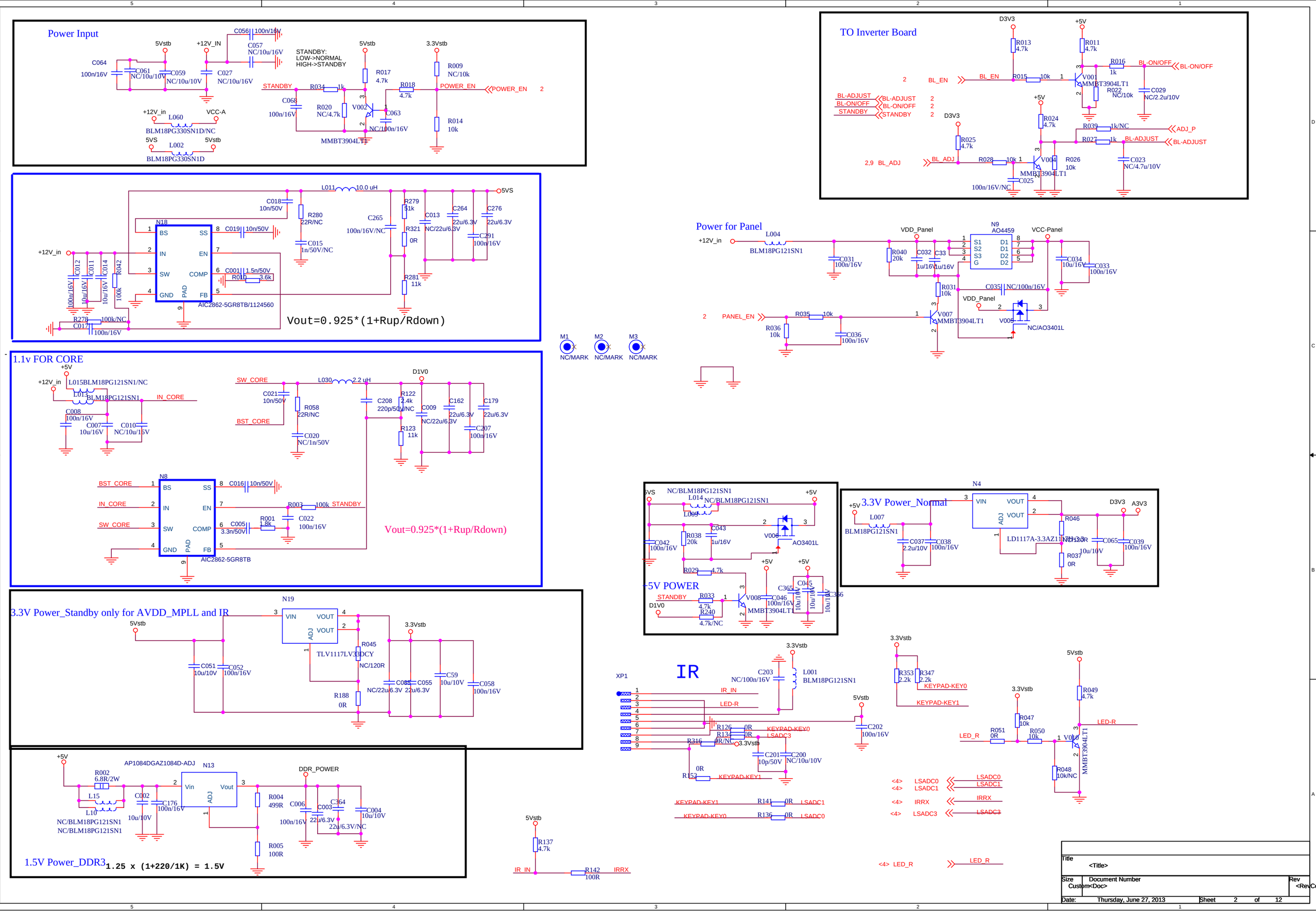
Power Input
5Vstb
+12V_IN
C056 100n/16V
C057 NC/10u/16V
C064 100n/16V
C061 NC/10u/10V
C059 NC/10u/10V
C027 NC/10u/16V
STANDBY: LOW->NORMAL HIGH->STANDBY
3.3Vstb
R009 NC/10k
R017 4.7k
R018 4.7k
STANDBY
R034 1k
POWER_EN
C068 100n/16V
R020 NC/4.7k
V002
C063 NC/100n/16V
R014 10k
MMBT3904LT1
+12V_in
L060
VCC-A
BLM18PG330SN1D/NC
5VS
L002
BLM18PG330SN1D
TO Inverter Board
D3V3
R013 4.7k
R011 4.7k
R016 1k
BL-ON/OFF
BL_EN
R015 10k
V001 MMBT3904LT1
R022 NC/10k
C029 NC/2.2u/10V
BL-ADJUST
STANDBY
R024 4.7k
R039 1k/NC
ADJ_P
R027 1k
R025 4.7k
BL_ADJ
R028 10k
V004
R026 10k
C023 NC/4.7u/10V
C025 100n/16V/NC
L011 10.0 uH
5VS
C018 10n/50V
R280 22R/NC
C015 1n/50V/NC
C265 100n/16V/NC
R279 31k
R321 0R
C013 NC/22u/6.3V
C264 22u/6.3V
C276 22u/6.3V
C291 100n/16V
R281 11k
N18
BS
SS
IN
EN
SW
COMP
GND
PAD
FB
C019 10n/50V
C001 1.5n/50V
R010 3.6k
AIC2862-5GR8TB/1124560
+12V_in
C012 100n/16V
C011 10u/16V
C014 10u/16V
R042 100k
R278 100k/NC
C017 100n/16V
Vout=0.925*(1+Rup/Rdown)
Power for Panel
+12V_in
L004
BLM18PG121SN1
C031 100n/16V
VDD_Panel
R040 20k
C032 1u/16V
C33 1u/16V
N9
AO4459
S1
S2
S3
G
D1
D2
VCC-Panel
C034 10u/16V
C033 100n/16V
R031 10k
C035 NC/100n/16V
VDD_Panel
V005
NC/AO3401L
PANEL_EN
R035 10k
R036 10k
C036 100n/16V
V007 MMBT3904LT1
M1 NC/MARK
M2 NC/MARK
M3 NC/MARK
1.1v FOR CORE
+5V
+12V_in
L015BLM18PG121SN1/NC
L013 BLM18PG121SN1
IN_CORE
C008 100n/16V
C007 10u/16V
C010 NC/10u/16V
SW_CORE
L030 2.2 uH
D1V0
C021 10n/50V
R058 22R/NC
BST_CORE
C020 NC/1n/50V
C208 220p/50V
R122 2.4k/NC
C009 NC/22u/6.3V
C162 22u/6.3V
C179 22u/6.3V
R123 11k
C207 100n/16V
N8
BS
SS
IN
EN
SW
COMP
GND
PAD
FB
C016 10n/50V
R003 100k
STANDBY
C022 100n/16V
R001 1.8k
C005 3.3n/50V
AIC2862-5GR8TB
Vout=0.925*(1+Rup/Rdown)
5VS
NC/BLM18PG121SN1
L014 NC/BLM18PG121SN1
L009
+5V
C042 100n/16V
R038 20k
C043 1u/16V
V006
AO3401L
R029 4.7k
-5V POWER
STANDBY
R033 4.7k
R240 4.7k/NC
D1V0
V008 MMBT3904LT1
C046 100n/16V
C365 10u/10V
C045 10u/10V
C366 10u/10V
N4
3.3V Power_Normal
+5V
L007
BLM18PG121SN1
C037 2.2u/10V
C038 100n/16V
VIN
VOUT
ADJ
LD1117A-3.3AZ11
R046 NC/120R
D3V3
A3V3
C065 10u/10V
C039 100n/16V
R037 0R
3.3V Power_Standby only for AVDD_MPLL and IR
N19
5Vstb
VIN
VOUT
ADJ
TLV1117LV33DCY
R045 NC/120R
3.3Vstb
C051 10u/10V
C052 100n/16V
C085 NC/22u/6.3V
C055 22u/6.3V
C59 10u/10V
C058 100n/16V
R188 0R
IR
XP1
IR_IN
LED-R
3.3Vstb
C203 NC/100n/16V
L001 BLM18PG121SN1
5Vstb
C202 100n/16V
R126 0R
R134 0R/NC
KEYPAD-KEY0
LSADC3
R316
C201 10p/50V
C200 NC/10u/10V
R152 0R
KEYPAD-KEY1
R141 0R
LSADC1
R136 0R
LSADC0
3.3Vstb
R353 2.2k
R347 2.2k
KEYPAD-KEY0
KEYPAD-KEY1
5Vstb
R049 4.7k
3.3Vstb
R047 10k
LED_R
R051 0R
R050 10k
V010
MMBT3904LT1
R048 10k/NC
<4> LSADC0
<4> LSADC1
<4> IRRX
<4> LSADC3
<4> LED_R
+5V
AP1084DGAZ1084D-ADJ
N13
R002 6.8R/2W
L15
L10
NC/BLM18PG121SN1
NC/BLM18PG121SN1
C002 10u/10V
C176 100n/16V
Vin
Vout
ADJ
DDR_POWER
R004 499R
C006 100n/16V
C003 22u/6.3V
C364 22u/6.3V/NC
C004 10u/10V
R005 100R
1.5V Power_DDR3
1.25 x (1+220/1K) = 1.5V
5Vstb
R137 4.7k
IR_IN
R142 100R
IRRX
Title
<Title>
Size
Custom
Document Number
<Doc>
Rev
<RevCo
Date:
Thursday, June 27, 2013
Sheet
2
of
12

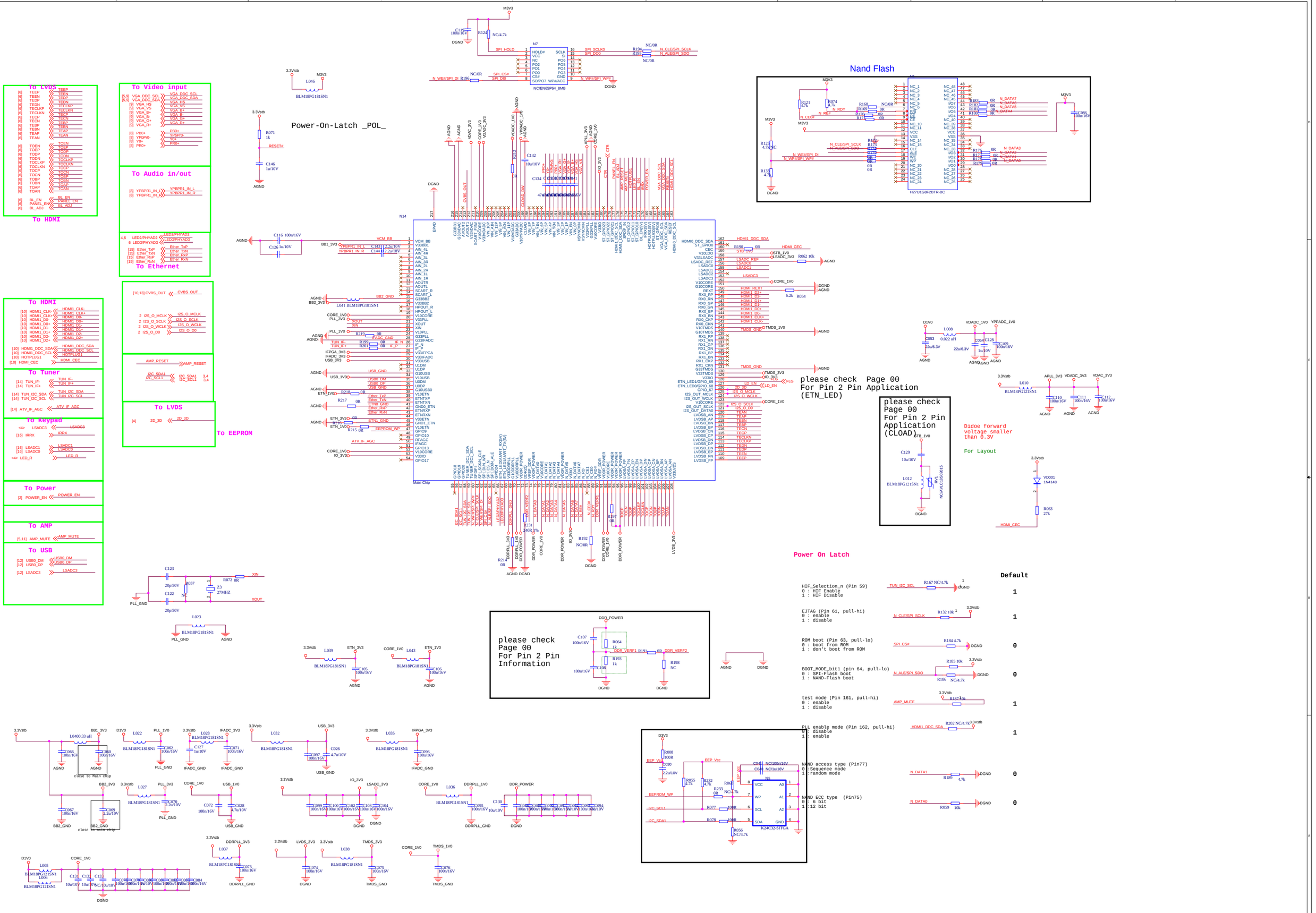
To LVDS
To Video input
To Audio in/out
To HDMI
To Ethernet
To HDMI
To Tuner
To Keypad
To LVDS
To EEPROM
To Power
To AMP
To USB
Power-On-Latch _POL_
Nand Flash
Main Chip
please check Page 00 For Pin 2 Pin Application (ETN_LED)
please check Page 00 For Pin 2 Pin Application (CLOAD)
Didoe forward voltage smaller than 0.3V
For Layout
Power On Latch
please check Page 00 For Pin 2 Pin Information
Default
HIF_Selection_n (Pin 59)
0 : HIF Enable
1 : HIF Disable
EJTAG (Pin 61, pull-hi)
0 : enable
1 : disable
ROM boot (Pin 63, pull-lo)
0 : boot from ROM
1 : don't boot from ROM
BOOT_MODE_bit1 (Pin 64, pull-lo)
0 : SPI-Flash boot
1 : NAND-Flash boot
test mode (Pin 161, pull-hi)
0 : enable
1 : disable
PLL enable mode (Pin 162, pull-hi)
0 : disable
1 : enable
NAND access type (Pin77)
0 :Sequence mode
1 :random mode
NAND ECC type (Pin75)
0 : 6 bit
1 :12 bit
RTD2649_MAIN CHIP_216A
Document Number
Rev 1.0
Thursday, June 27, 2013
Sheet 2 of 18

插座物料号： 1113149

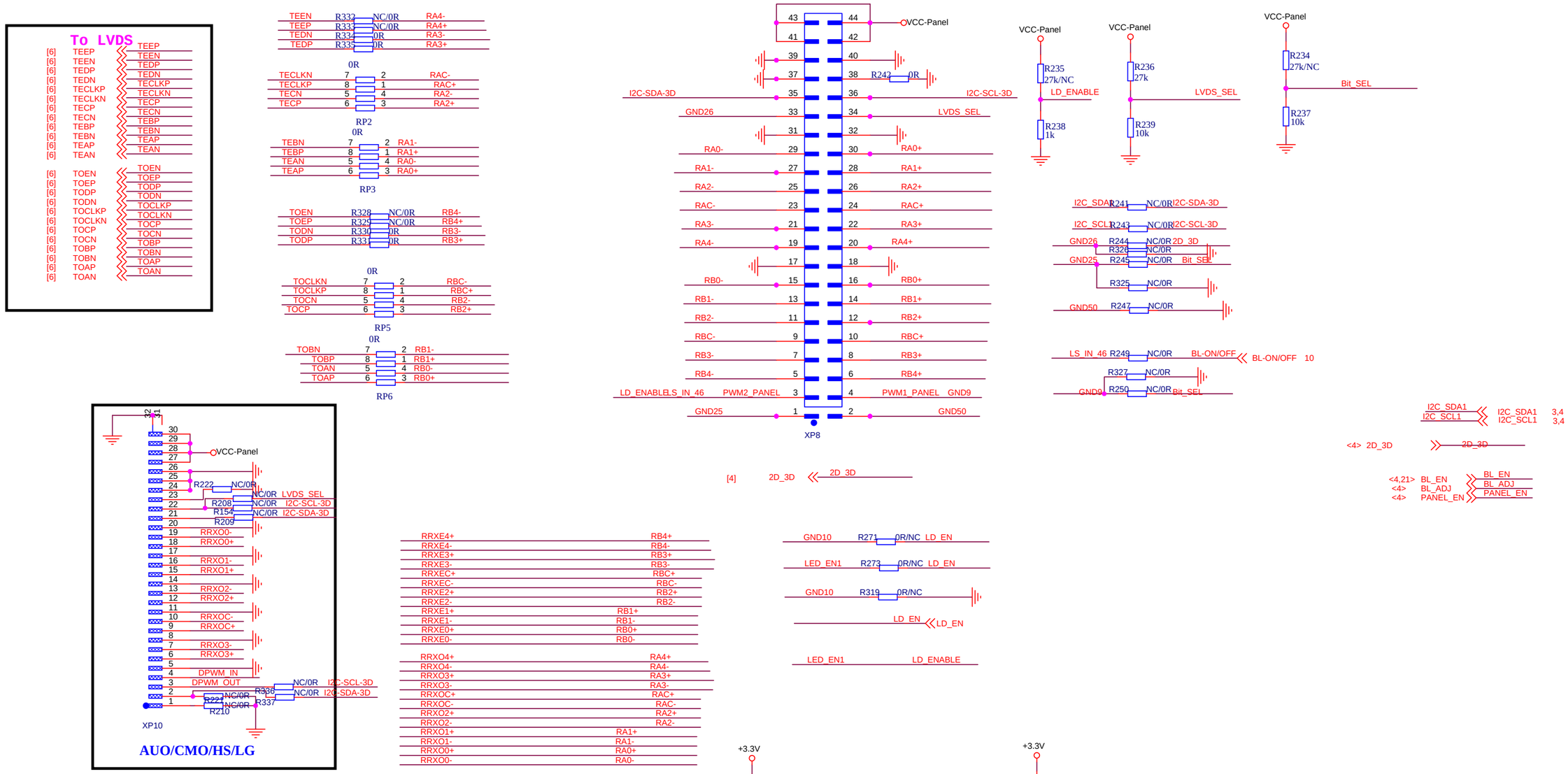

Title	<Title>		
Size Custom	Document Number <Doc>		Rev <RevCode>
Date: Thursday, June 27, 2013	Sheet 6 of 12		

Audio AMP

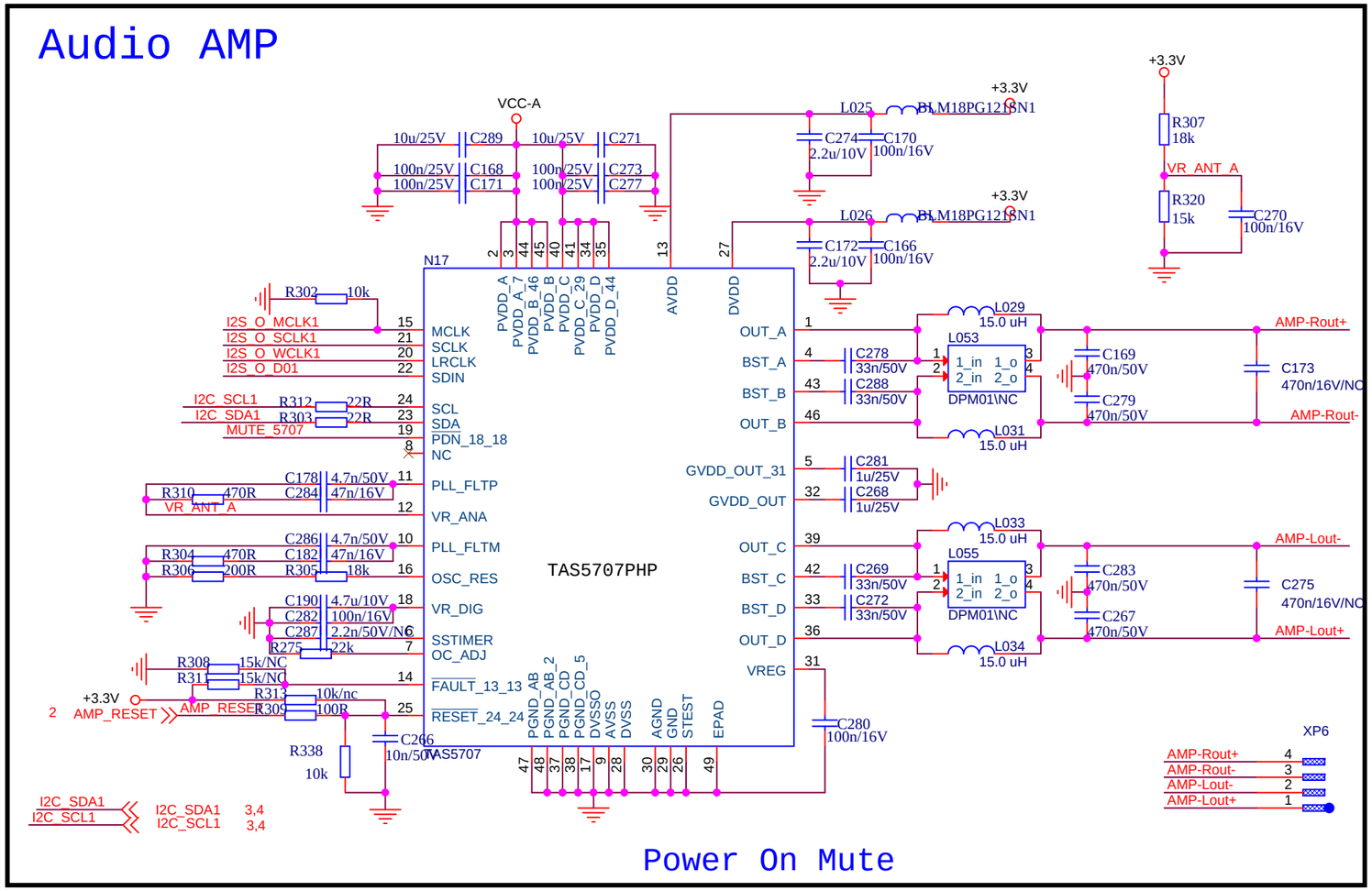

Power On Mute

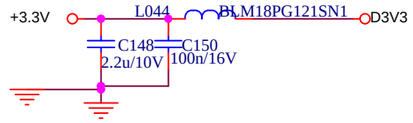

C281,C251靠近功放芯片放置

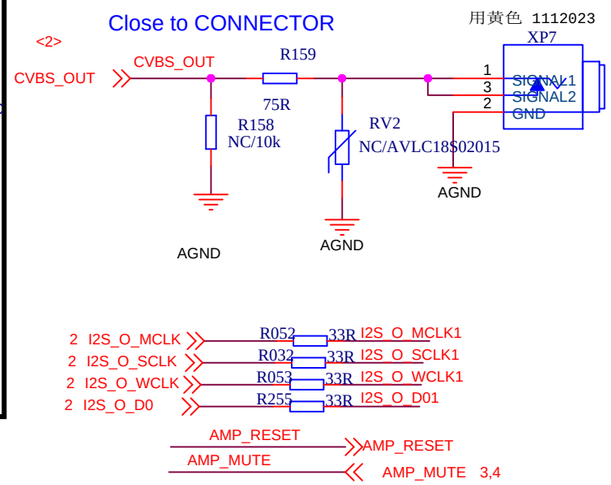

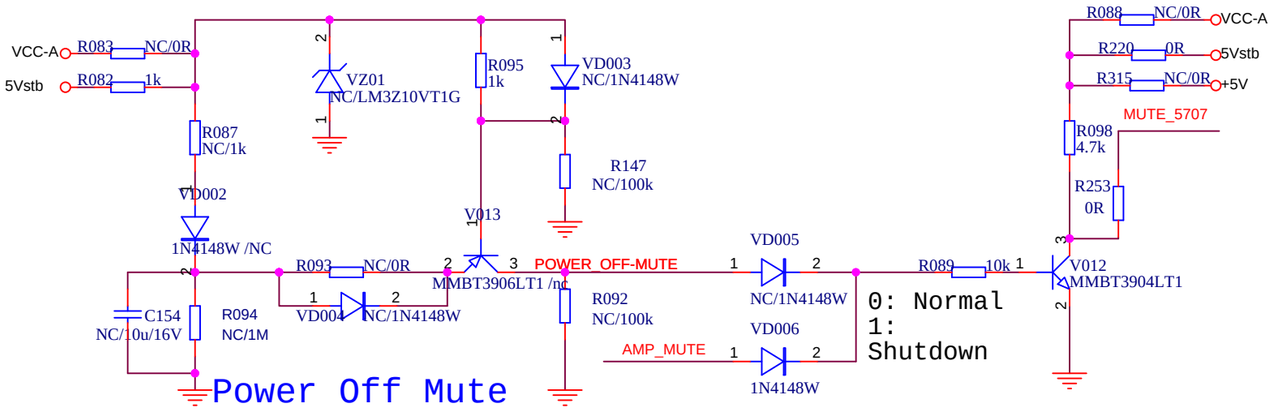

Power Off Mute

Title	<Title>	
Size B	Document Number <Doc>	Rev <RevCode>
Date: Thursday, June 27, 2013	Sheet 8 of 12	

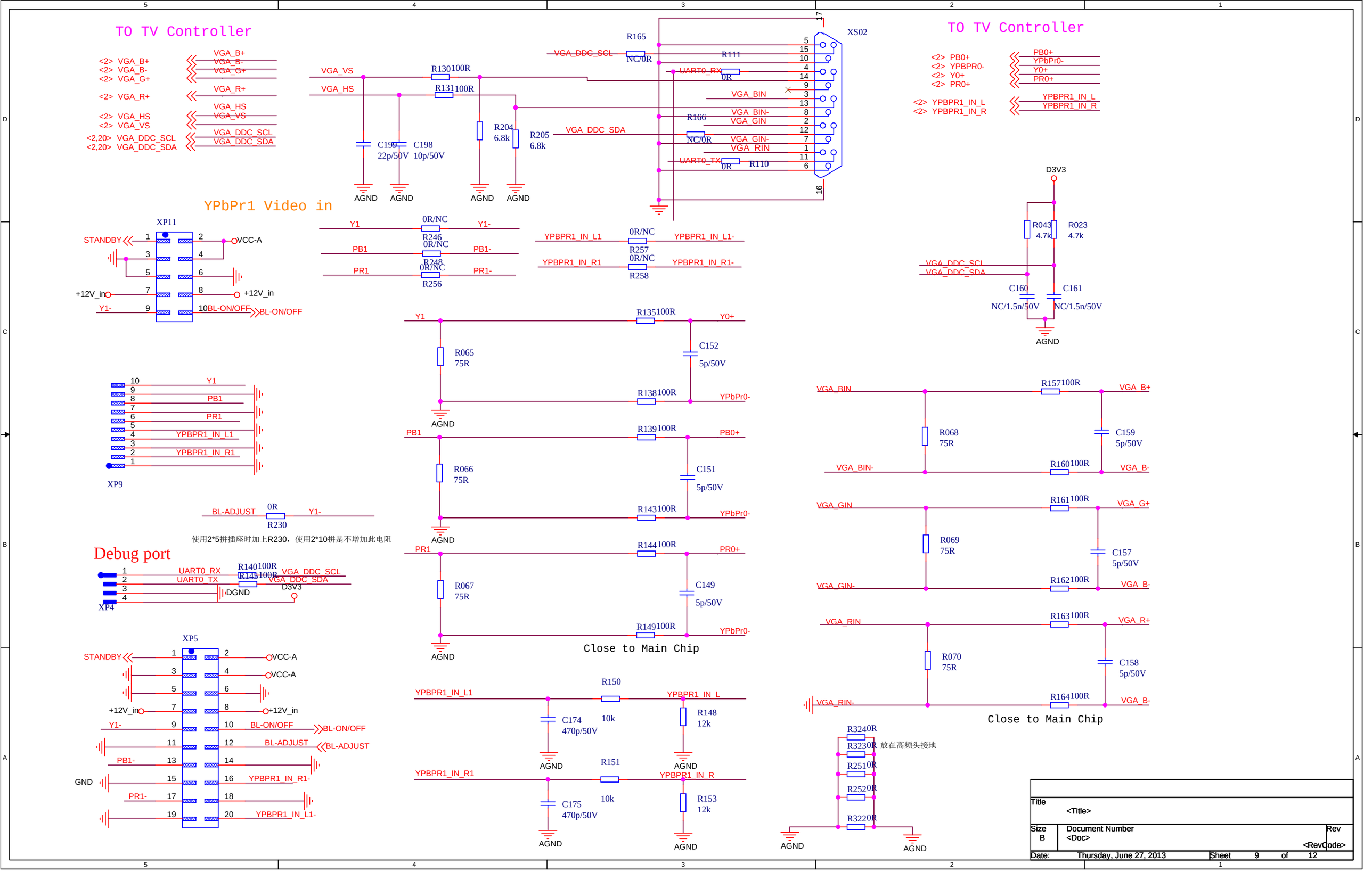
TO TV Controller
<2> VGA_B+
<2> VGA_B-
<2> VGA_G+
<2> VGA_R+
<2> VGA_HS
<2> VGA_VS
<2,20> VGA_DDC_SCL
<2,20> VGA_DDC_SDA
VGA_B+
VGA_B-
VGA_G+
VGA_R+
VGA_HS
VGA_VS
VGA_DDC_SCL
VGA_DDC_SDA
VGA_VS
VGA_HS
R130 100R
R131 100R
C199 22p/50V
C198 10p/50V
R204 6.8k
R205 6.8k
AGND
VGA_DDC_SCL
R165 NC/0R
R111 0R
UART0_RX
VGA_BIN
VGA_BIN-
VGA_GIN
R166 NC/0R
VGA_DDC_SDA
VGA_GIN-
VGA_RIN
UART0_TX
R110 0R
XS02
TO TV Controller
<2> PB0+
<2> YPBPR0-
<2> Y0+
<2> PR0+
<2> YPBPR1_IN_L
<2> YPBPR1_IN_R
PB0+
YPbPr0-
Y0+
PR0+
YPBPR1_IN_L
YPBPR1_IN_R
YPbPr1 Video in
XP11
STANDBY
VCC-A
+12V_in
Y1-
BL-ON/OFF
Y1
PB1
PR1
0R/NC
R246
R248
R256
YPBPR1_IN_L1
YPBPR1_IN_R1
R257
R258
YPBPR1_IN_L1-
YPBPR1_IN_R1-
D3V3
R043 4.7k
R023 4.7k
C160 NC/1.5n/50V
C161 NC/1.5n/50V
R135 100R
R138 100R
R139 100R
R143 100R
R144 100R
R149 100R
R065 75R
R066 75R
R067 75R
C152 5p/50V
C151 5p/50V
C149 5p/50V
YPbPr0-
PB0+
PR0+
Close to Main Chip
XP9
BL-ADJUST
R230 0R
使用2*5拼插座时加上R230，使用2*10拼是不增加此电阻
Debug port
XP4
UART0_RX
UART0_TX
R140 100R
R141 100R
VGA_DDC_SCL
VGA_DDC_SDA
DGND
D3V3
XP5
GND
PB1-
PR1-
YPBPR1_IN_R1-
YPBPR1_IN_L1-
R150
R151
C174 470p/50V
C175 470p/50V
10k
R148 12k
R153 12k
YPBPR1_IN_L
YPBPR1_IN_R
R157 100R
R160 100R
R161 100R
R162 100R
R163 100R
R164 100R
R068 75R
R069 75R
R070 75R
C159 5p/50V
C157 5p/50V
C158 5p/50V
VGA_BIN
VGA_BIN-
VGA_GIN
VGA_GIN-
VGA_RIN
VGA_RIN-
VGA_B+
VGA_B-
VGA_G+
VGA_R+
Close to Main Chip
R3240R
R3230R
R2510R
R2520R
R3220R
放在高频头接地
Title
<Title>
Size B
Document Number
<Doc>
Rev
<RevCode>
Date: Thursday, June 27, 2013
Sheet 9 of 12

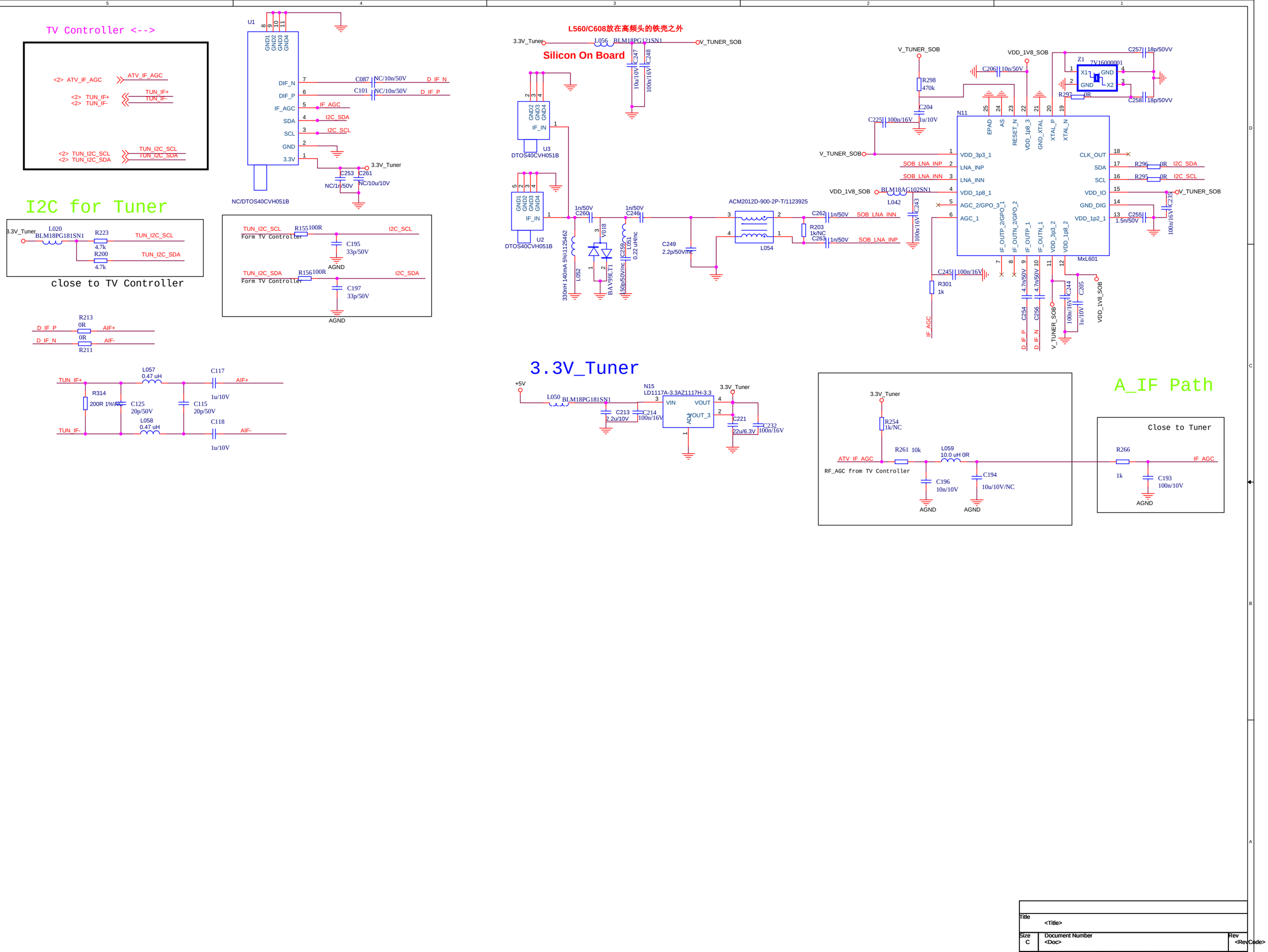

Title	<Title>	
Size C	Document Number <Doc>	Rev <RevCode>
Date: Thursday, June 27, 2013	Sheet 10 of 12	

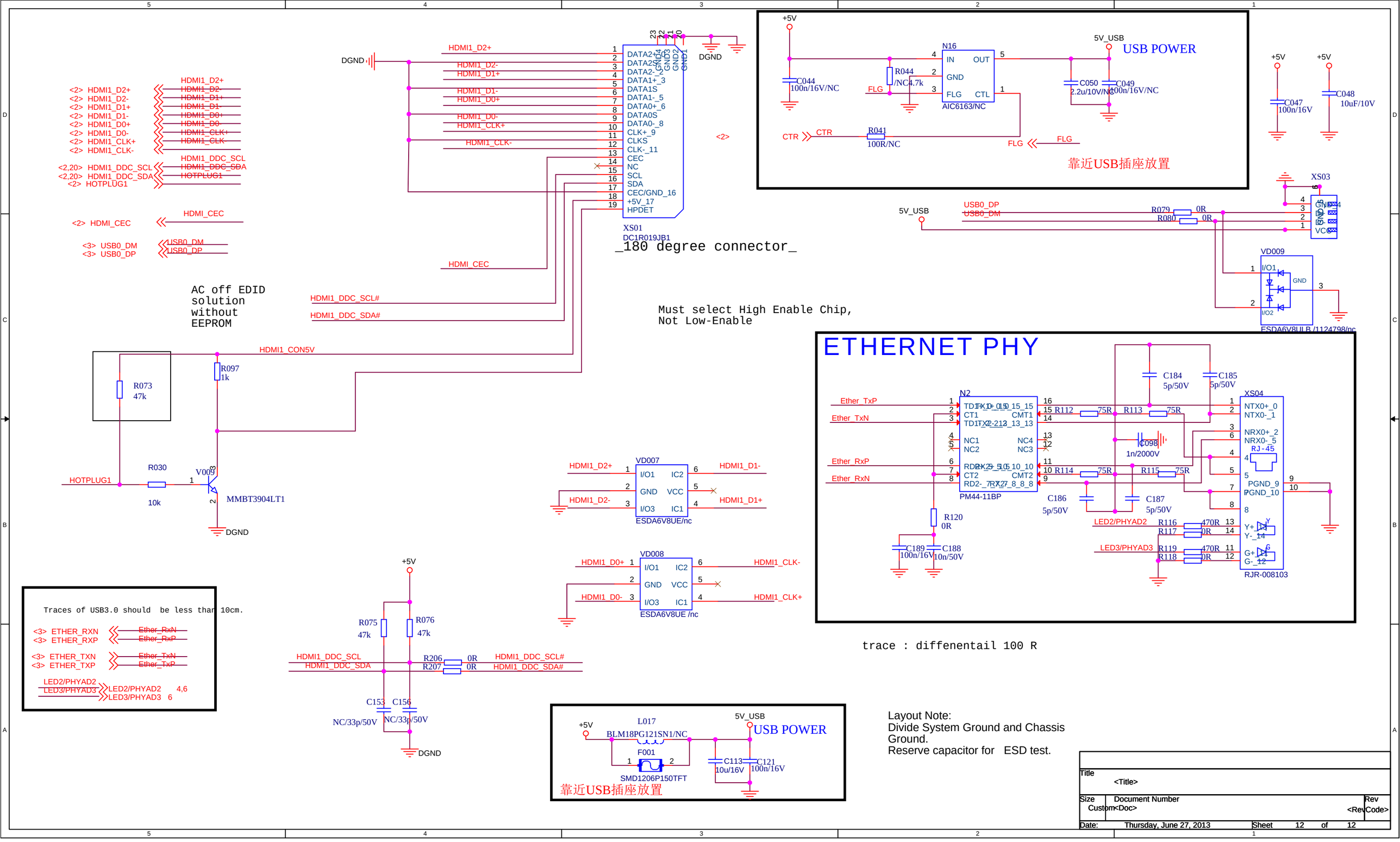

Layout Note:
Divide System Ground and Chassis Ground.
Reserve capacitor for ESD test.

Title	<Title>	
Size Custom	Document Number <Doc>	Rev <RevCode>
Date: Thursday, June 27, 2013	Sheet 12 of 12	