Hisense®

# LCD Television Service Manual

Product Type: LEDN32A300J/JAM
LEDN29W20/AM

Chassis: MST V59

Hisense Electric Co.,Ltd

April,2013

# Contents

**Contents** ..... - 2 -
**Service Manual** ..... - 3 -
1. Precautions and notices..... - 3 -
1.1 Warning..... - 4 -
1.2 Notes..... - 6 -
2. Product Specifications: ..... - 8 -
2.1 Specification ..... - 8 -
2.2 Main Board..... - 9 -
2.2 Power Board..... - 9 -
2.3 Wiring Diagram..... - 10 -
3. Factory/Service OSD Menu and Adjustment..... - 11 -
3.1 To enter the Factory OSD Menu ..... - 11 -
3.2 Factory OSD Menu..... - 11 -
4. Software Upgrading..... - 13 -
4.1 Get ready for upgrading..... - 13 -
4.2 Upgrading with the Mstar tool……..... - 16 -
4.3 1 Update with USB directly..... - 16 -
4.3.2 Using factory menu to upgrade..... - 16 -
5. Power assign & Signal process..... - 20 -
5.1 MST V59 Power assign ..... - 20-
5.2 MST V59 Signal process ..... - 20
5.3. Troubleshooting ..... - 21 -
6. Schematic circuit diagram ..... - 31 -
7. Explode view ..... - 39 -

# Service Manual

## 1. Precautions and notices

BEFORE SERVICING THE LCD TV, READ THE SAFETY PRECAUTIONS IN THIS MANUAL.

USE ONLY MANUFACTURER SPECIFIED REPLACEMENT PARTS WHEN SERVICING.

USE OF NON-AUTHORIZED PARTS WILL VOID THE MANUFACTURE'S WARRANTY

Proper service and repair is important to the safe, reliable operation of all Hisense Equipment. The service procedures recommended by Hisense and described in this Service Guide are effective methods of performing service operations. Some of these service operations require the use of tools specially designed for the purpose. The special tools should be used when and as recommended.

It is important to note that this manual contains various CAUTIONS and NOTICES which should be carefully read in order to minimize the risk of personal injury to service personnel. The possibility is that improper service methods may damage the equipment and pose risk of personal injury

. It is also important to understand that these CAUTIONS and NOTICES ARE NOT EXHAUSTIVE. Service should only be performed by an experienced electronics technician trained in the proper Television safety and service methods and procedures Hereafter throughout this manual, Hisense will be referred to.

## 1.1 Warning

1.1.1

Critical components having special safety characteristics are identified with a ⚠ by the Ref. No. in the parts list. Use of non-manufacturer's recommended parts may create shock, fire, or other hazards. Under no circumstances should the original design be modified or altered without written permission from Hisense assumes no liability, express or implied, arising out of any unauthorized modification of design. Service tech assumes all liability.

***DANGER CAUTION**

**TO ENSURE THE CONTINUED RELIABILITY OF THIS PRODUCT, USE ONLY ORIGINAL MANUFACTURER'S REPLACEMENT PARTS, WHICH ARE LISTED WITH THEIR PART NUMBERS IN THE PARTS LIST SECTION OF THIS SERVICE GUIDE.**

1.1.2.

All ICs and many other semiconductors are susceptible to electrostatic discharges (ESD). Careless handling during repair can reduce life drastically. When repairing, be sure to use antistatic table mats and properly use a grounding wrist strap. Keep components and tools also at this same potential.

**IMPORTANT:**

**Always disconnect the power cord from AC outlet before replacing parts or modules.**

1.1.3

To prevent electrical shock, use only a properly grounded 3 prong outlet or extension cord.

1.1.4

substitutions may result in fire, electric shock, or other hazards and will void the manufacturer's warranty.

1.1.5

Safety regulations require that after a repair the set must be returned in its original condition. In addition, prior to closing set, check that:

>All wire harnesses and flex cables are properly routed and secured with factory tape and/or mounted cable clamps.

> All cables and connectors are properly insulated and do not have any bare wires/lead exposed.

1.1.6

(1) Do not supply a voltage higher than that specified to this product. This may damage the product and may cause a fire.

(2) Do not use this product:

> High humidity areas

> In an area where any water could enter or splash into the unit.

High humidity and water could damage the product and cause fire.

(3) If a foreign substance (such as water, metal, or liquid) gets inside the panel module, immediately turn off the power. Continuing to use the product may cause fire or electric shock.

(4) If the product emits smoke, and abnormal smell, or makes an abnormal sound, immediately turn off the power. Continuing to use the product, it may cause fire or electric shock.

(5) Do not pull out or insert the power cable from/to an outlet with wet hands. It may cause electric shock.

(6) Do not damage or modify the power cable. It may cause fire or electric shock.

(7) If the power cable is damaged, or if the connector is loose, do not use the product: otherwise, this can lead to fire or electric shock.

(8) If the power connector or the connector of the power cable becomes dirty or dusty, wipe it with a dry cloth. Otherwise, this can lead to fire.

(9) Use only with the cart, stand, tripod, bracket, or table specified by the manufacturer, or sold with the apparatus. When a cart is used, use caution when moving the cart/apparatus combination to avoid injury from tip-over.

## 1.2 Notes

Notes on Safe Handling of the LCD panel and during service

The work procedures shown with the Note indication are important for ensuring the safety of the product and the servicing work. Be sure to follow these instructions.

• Before starting the work, secure a sufficient working space.

• At all times other than when adjusting and checking the product, be sure to turn OFF the POWER Button and disconnect the power cable from the power source of the TV during servicing.

• To prevent electric shock and breakage of PC board, start the servicing work at least 30 seconds after the main power has been turned off. Especially when installing and removing the power board, start servicing at least 2 minutes after the main power has been turned off.

• While the main power is on, do not touch any parts or circuits other than the ones specified. If any connection other than the one specified is made between the measuring equipment and the high voltage power supply block, it can result in electric shock or may trip the main circuit breaker When installing the LCD module in, and removing it from the packing carton, be sure to have at least two persons perform the work.

• When the surface of the panel comes into contact with the cushioning materials, be sure to confirm that there is no foreign matter on top of the cushioning materials before the surface of the panel comes into contact with the cushioning materials.

Failure to observe this precaution may result in, the surface of the panel being scratched by foreign matter.

• Be sure to handle the circuit board by holding the large parts as the heat sink or transformer. Failure to observe this precaution may result in the occurrence of an abnormality in the soldered areas.

• Do not stack the circuit boards. Failure to observe this precaution may result in problems resulting from scratches on the parts, the deformation of parts, and short-circuits due to residual electric charge.

• Perform a safety check when servicing is completed. Verify that the peripherals of the serviced points have not undergone any deterioration during servicing. Also verify that

the screws, parts and cables removed for servicing purposes have all been returned to their proper locations in accordance with the original setup.

The lightning flash with arrowhead symbol, within an equilateral triangle is intended to alert the user to the presence of insinuated dangerous voltage within the products enclosure that may be of sufficient magnitude to constitute a risk of electric shock.

The exclamation point within an equilateral triangle is intended to alert the user to the presence of important operating and maintenance (servicing) instructions in the literature accompanying the set.

# 2. Product Specifications:

## 2.1 Specification: LEDN29W20 & LEDN32A300J

| | | |
|---|---|---|
| Dimension | With Stand | Width: 665 mm<br>Height: 455 mm<br>Depth: 180mm |
| | Without Stand | Width: 665 mm<br>Height: 405 mm<br>Depth: 66 mm |
| Weight | NET | 6.8 kg |
| | GROSS | 9.0 kg |
| LED Panel Minimum size (diagonal) | | 29 inches |
| Screen resolution | | 1366 × 768 |
| Audio power | | 8 W + 8 W |
| Power consumption | | 50W |
| Power supply | | 100--240 V ~ 50 / 60 Hz |
| USB supply | | DC 5V, Max 500mA |
| Receiving systems | Analog | PAL SECAM |
| Environmental conditions | | Temperature: 5°C~ 45°C<br>Humidity: 20%-80% RH<br>Atmospheric pressure: 86 kPa - 106 kPa |

| | | |
|---|---|---|
| Dimension | With Stand | Width: 737 mm<br>Height: 500 mm<br>Depth: 198mm |
| | Without Stand | Width: 737 mm<br>Height: 446 mm<br>Depth: 60 mm |
| Weight | NET | 7.9 kg |
| | GROSS | 10.2 kg |
| LED Panel Minimum size (diagonal) | | 32 inches |
| Screen resolution | | 1366 × 768 |
| Audio power | | 8 W + 8 W |
| Power consumption | | 50W |
| Power supply | | 100--240 V ~ 50 / 60 Hz |
| USB supply | | DC 5V, Max 500mA |
| Receiving systems | Analog | PAL SECAM |
| Environmental conditions | | Temperature: 5°C~ 45°C<br>Humidity: 20%-80% RH<br>Atmospheric pressure: 86 kPa - 106 kPa |

**Notes:**Features,appearance and specifications are subject to change without notice.

## 2.2 Main Board:

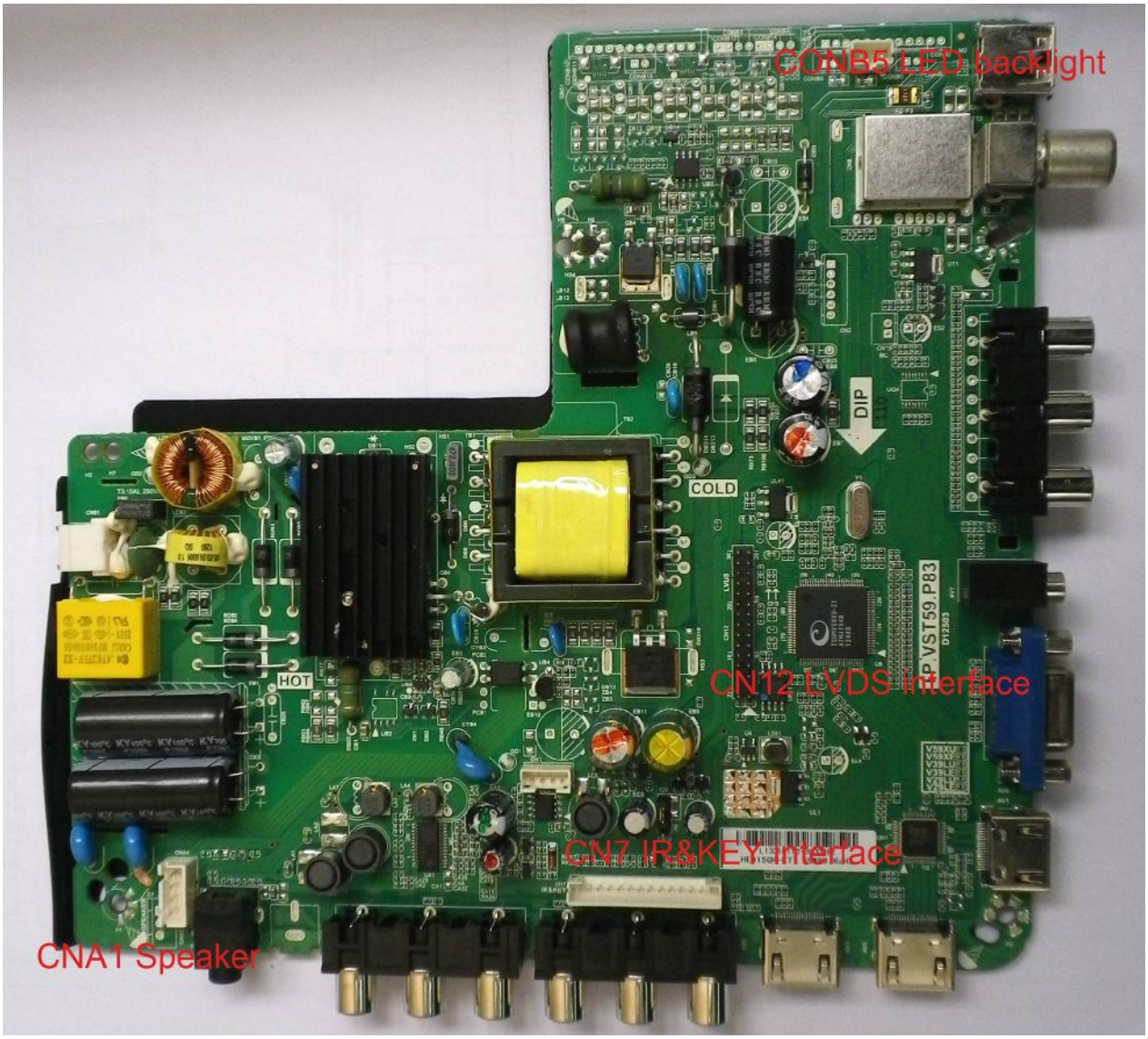


The “main board & power board image”is only for reference, other **V59.P83** products

refer to the actual units to determine the boards, please.

## 2.3 Wiring Diagram:

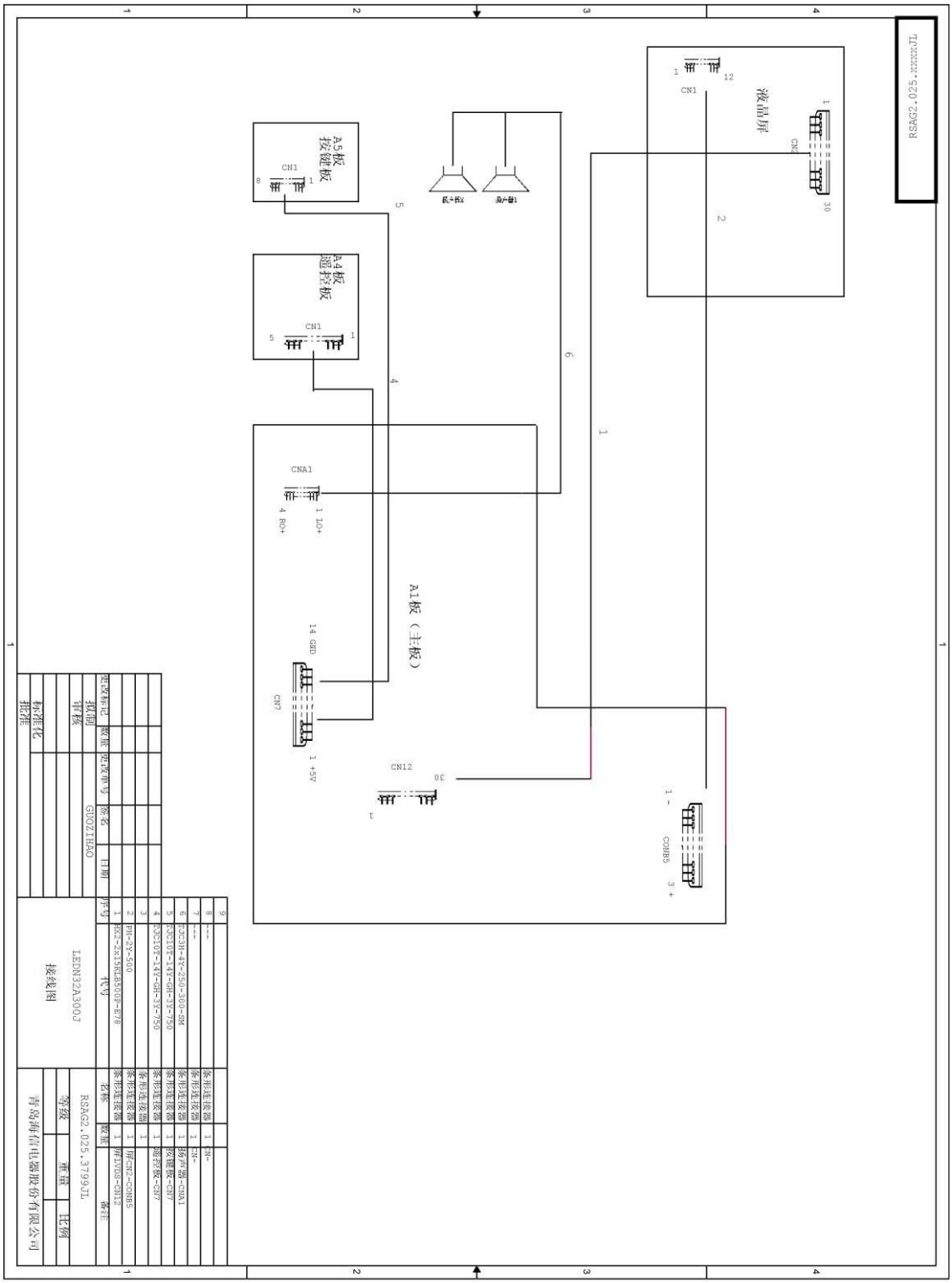
RSAG2.025.xxxxJL
液晶屏
CN1
CN3
A5板
按键板
CN1
A4板
遥控板
CN1
扬声器
扬声器
A1板（主板）
CNA1
CN7
CN12
COMB5
1 LO+
4 RO+
14 GND
1 +5V
30
1 -
3 +
1
12
30
5
8
1
5
1
2
4
6
1
1
1

# 3. Factory/Service OSD Menu and Adjustment

## 3.1 To enter the Factory OSD Menu

a. With factory RC (remote control)

1. Press “M” button and enter factory mode.

2. Press “Menu” button and enter factory OSD menu.

3 . Press “CH+”/“CH-” button select the function menu, press “VOL+”/“VOL-” enter the selected function menu. Press “VOL+”/“VOL-” button adjust values in the menu.

4. Press “M” button exit factory mode in the factory OSD menu.

When TV outgoing factory,user can not enter factory OSD menu with Factory Remote

b. With user’s RC

1. Power TV On

2. Press Menu button and call up User OSD Menu

3. Select Sound-> Balance

4. When Balance value is “0”, Enter 1->9->6 ->9 in sequence.

Note: If necessary, re-do number keys.

5. Factory OSD appears.

6. Press the standby button then AC turn off and restart the TV, which can exit factory OSD menu.

## 3.2 Factory OSD Menu

### 3.2.1 White Balance

**Note:** Different source has different WB values. Before adjusting, please change to desired source and aging for 30 minutes.

Factory Setting →Picture →W/B ADJUST

| | Color Temperature | Note |
|---|---|---|
| TEMPERATURE | Medium | Picture Medium mode |
| | Warm | Picture Warm mode |
| | Cool | Picture Cool mode |

| Item 0 | | Note |
|---|---|---|
| W/B ADJUST | R-GAIN | Red Driver adjust |
| | G-GAIN | Green Driver adjust |
| | B-GAIN | Blue Driver adjust |

| | | |
|---|---|---|
| | R-OFFSET | Red Cut adjust |
| | G-OFFSET | Green Cut adjust |
| | B-OFFSET | Blue Cut adjust |

### 3.2.2 Factory Option

**Note:** The factory menu date varies according to different sources. Incase changing the factory

data by error, you can choose to “INIT TV”, press RC right key or “ok” key , by which you can resume the default value as software set to clear the FLASH:

a. Select the item “INIT TV ”.

b. Press right button to clear the Flash data.

c. Close the OSD menu after 5 seconds.

d. auto restart the TV.

### 3.3 Designer Menu

| Item 0 | | Note |
|---|---|---|
| GENERAL SETTING | LVDS MAP | Lvds map select(0-15) |
| | LOGO | Power on LOGO(on/off) |
| | POWER | POWER OFF STATE(off/on/last) |
| | WHITE PATTERN | White pattern test mode (ON/RED/BLUE/GREEN/GREY/…) |
| | PWM | PWM SETTING (PORT/CYCLE/PERIOD/…) |
| | HOTEL MODE | HOTEL MODE SETTING(ON/OFF) |
| PICTURE | Backlight | Led backlight setting |
| | W/B ADJUST | WHITE BALANCE SETTING |
| | PQ NONLINEAR | PQ nonlinear setting |
| | Color setting | Color setting |
| | Luma_other | Luma_other SETTING |
| | Peaking setting | Peaking setting |
| | NR SETTING | NOISE reduction setting |
| | CTI SETTING | CTI SETTING |
| | gamma | Gamma setting |
| | DLC | DLC setting |
| | VIP | VIP select |
| PICTURE | Backlight | Led backlight setting |
| SOUND | SOUND MODE | SOUND MODE SELECT(SRANDARD/MUSIC/MOVIE/SPORTS/USER) |
| | VOLUME CURVE | VOLUME CURVE SETTING(MODE/OFFSET/AVC THRESHOLD/VOLUME TABLE… ) |
| | AUDIO OUTPUT | AUDIO OUTPUT setting(MainspeakOUT/SIFOUT/SPDIFout) |
| DEBUG | QMAP ADJUST | QMAP ADJUST |
| | PEQ | PEQ ADJUST |
| | VIF1 | VIF ADJUST |

| | | |
|---|---|---|
| | VIF2 | VIF ADJUST |
| | VIF3 | VIF ADJUST |
| | Init all(WB+ADC) | INITIAL DATA |
| | UART DEBUG | Uart debug port enable |
| | TIMER TEST | Timer test |
| | ERASE DB bank | Erase data bank |
| ADC ADJUST | AUTO ADC | ADC ADJUST |
| | MODE | ADC ADJUST |
| | R/G/B-GAIN | ADC ADJUST |
| | R/G/B-OFFSET | ADC ADJUST SETTING |
| EMC SETTING | MIU enable | MIU SPECTRUM SPREAD SETTING |
| | MIU SPAN | MIU SPECTRUM SPREAD SETTING |
| | MIU STEP | MIU SPECTRUM SPREAD SETTING |
| | LVDS ENABLE | LVDS SPECTRUM SPREAD SETTING |
| | LVDS SPAN | LVDS SPECTRUM SPREAD SETTING |
| | LVDS STEP | LVDS SPECTRUM SPREAD SETTING |
| SW INFORMATION | BUILD TIME/VERSION | SW INFORMATION |
| Software update(USB) | | PLUG IN U disk in USB port(put " bin_v59.bin" file in root dictionary),press right button or OK in RC ,TV will update automatic. Red and blue led indicator in TV will flash alternately .When led always show red color, the updating is finished. |
| INIT FAC CHANNEL | | Initial factory channel |
| INIT TV | | Initial TV data(SW set) |
| Burn mode | | Burn mode select(quit burn mode please press "standby" in TV key board) |

The above "Factory/Service OSD Menu" is for reference only , please refer to the actual units to determine the appearances.

# 4 .Software Upgrading

## 4.1 Get ready for upgrading

### 4.1.1 Install the driver

PL-2303 Driver Installer.rar

cp210x_driver.rar

ISP Tool 4537.rar

Serial connector: to TV's VGA port.

For the first connecting, the pc will recognize and automatically install the USB device. The process is just like the installation of a mini disk, see the following picture.

Select the default value, the driver will be installed step by step.

**4.1.2** Hardware connecting

Connect the unit to your pc with a USB-to-serial port cable. USB port connects to your pc, and serial port to the TV's VGA port.

USB Extension cord:

Serial port board: B.CNSISP7A

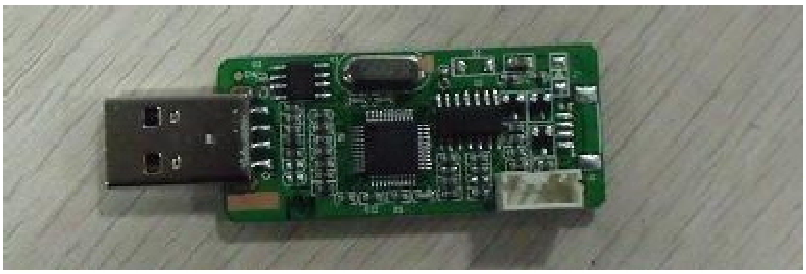

4-Pin connection line:

Plug in with VGA port:

For the first connecting, the pc will recognize and automatically install the USB device. The process is just like the installation of a mini disk, see the following picture.

### 4.1.3 USB Board Driver

After connecting USB connection line to pc and USB board to TV set:

Click “Setup.Exe”, ignoring any question, click “Next”

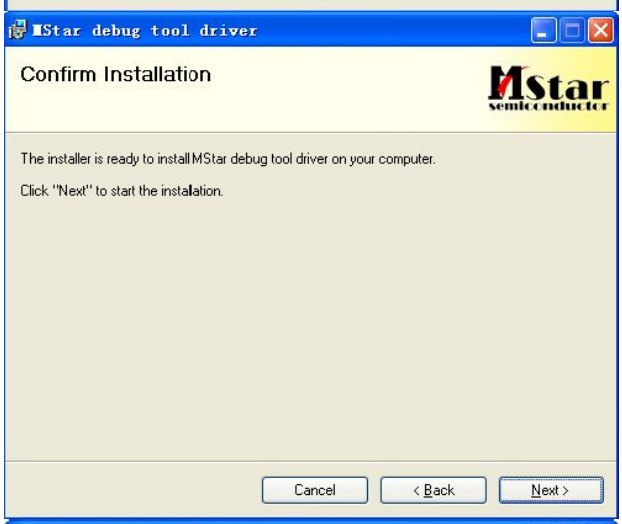


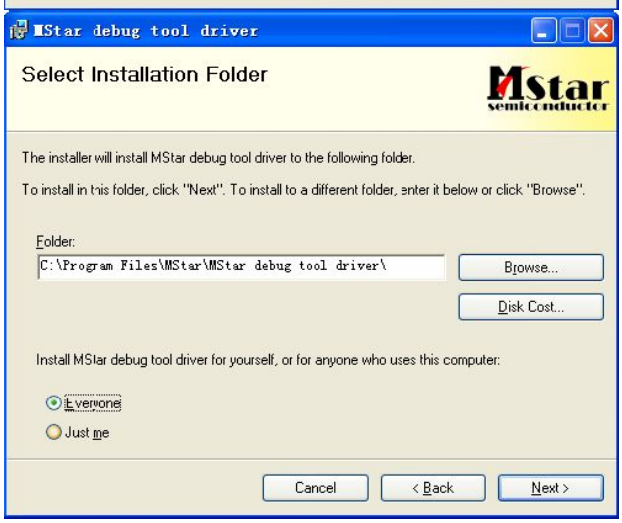

Select continue installation

Successful installed:

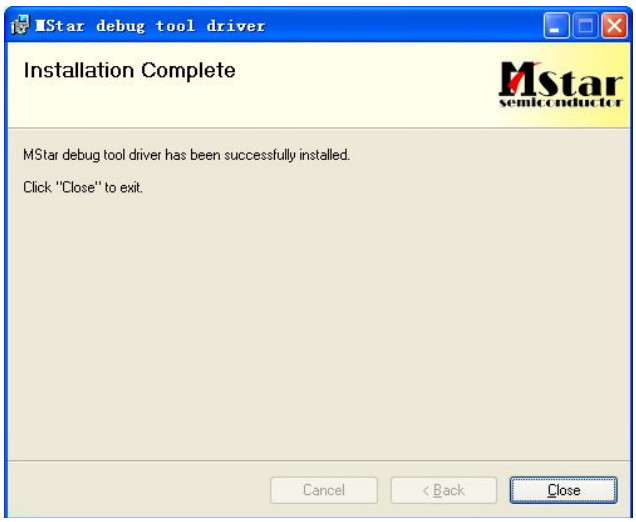

## 4.2 Upgrading with the Mstar Tool

ISP_Tool_4527 driver installation:

Decompress"ISP_Tool_4527",click "ISPISP_Tool.exe"

Set ISP Slave Address with "0x92", Serial Debug Slave Address with "0XB2" in "Config" Page:

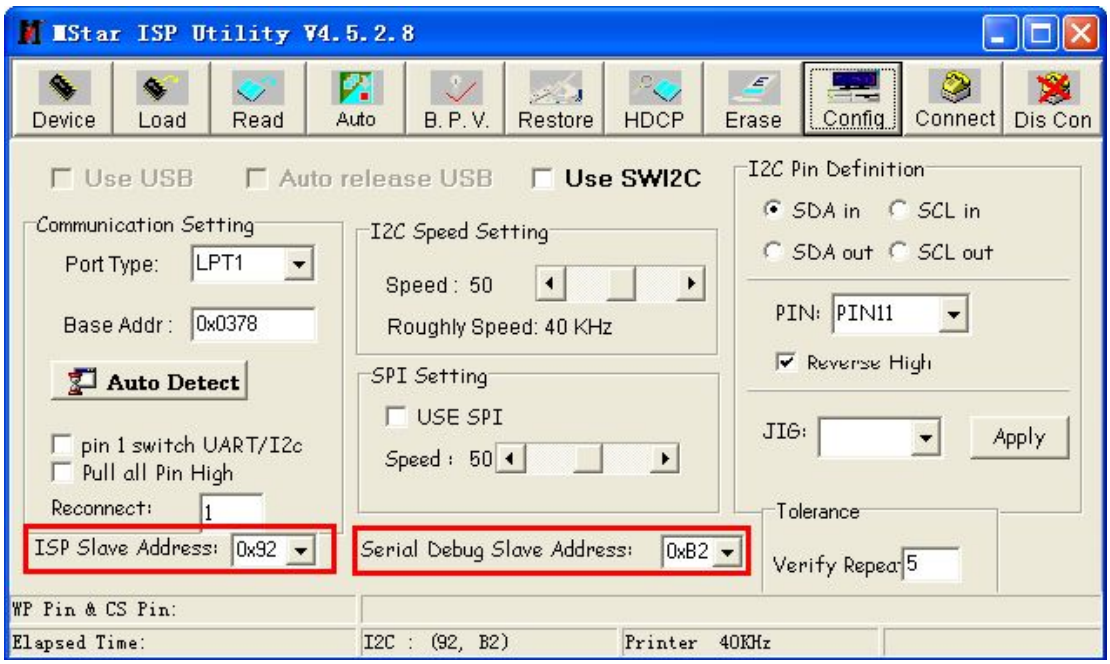


double click "ISPISP_Tool.exe", if show "Device Type", it shows installation is OK.

Note: It should be selected in Red box:

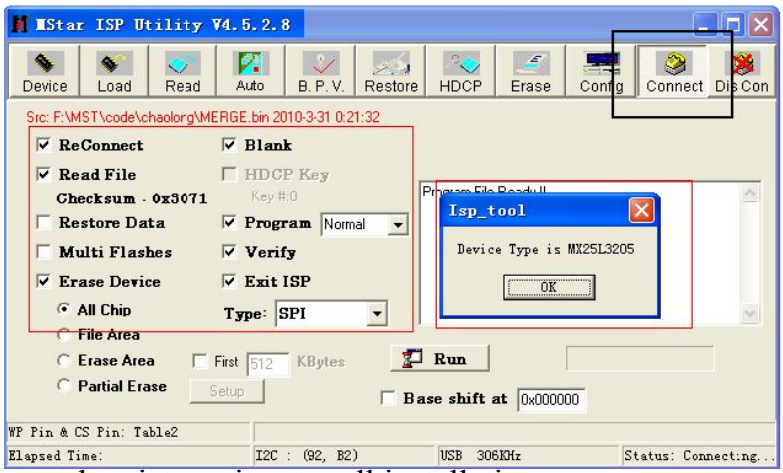


If shown the picture, it not well installation:

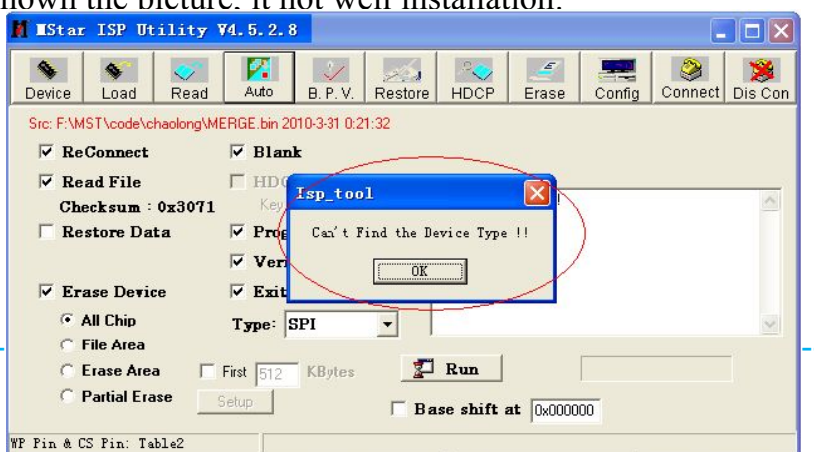

Please check: a. whether power on; b. whether USB board connected ok; c. whether connection line matched ok.

upgrading SW file:

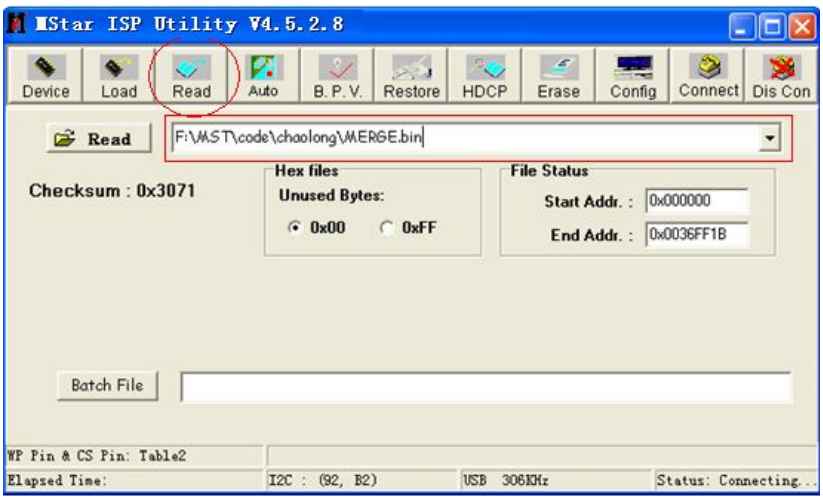


File name should be" bin_v59.bin"

switch to Auto page, click "Run"

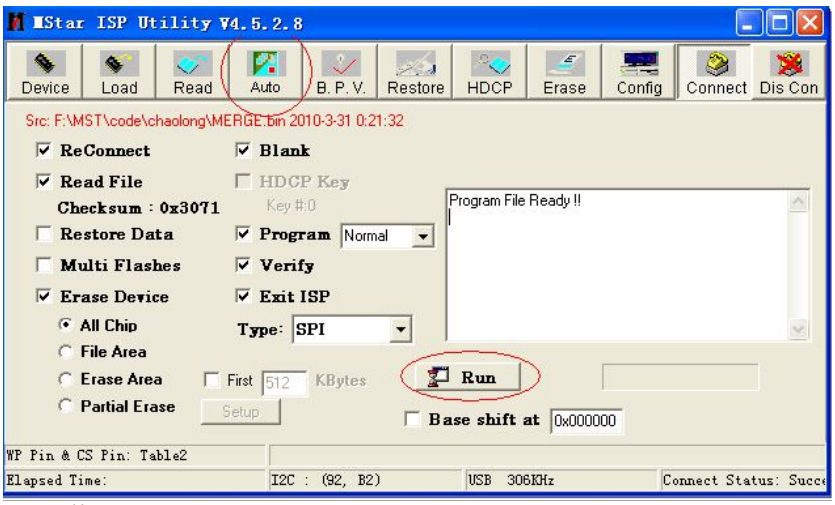


Upgrading:

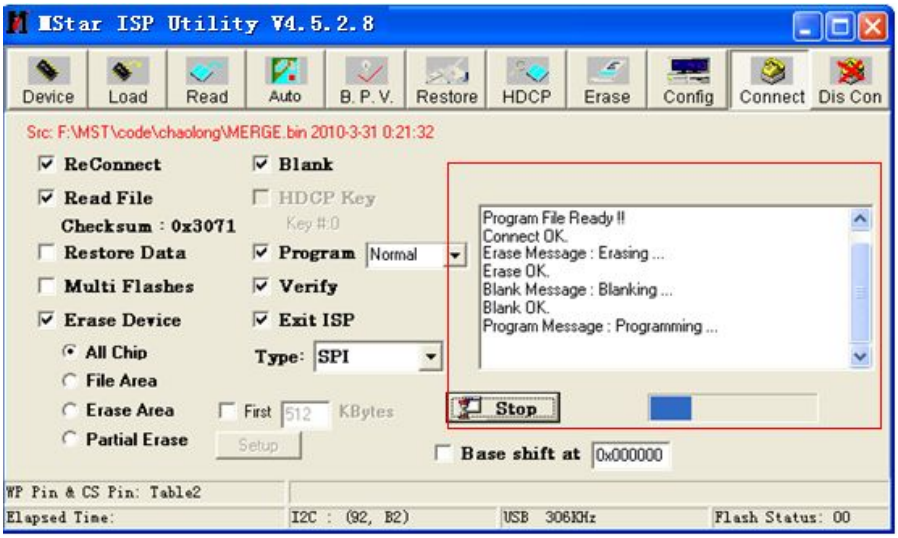

Successfully upgraded:

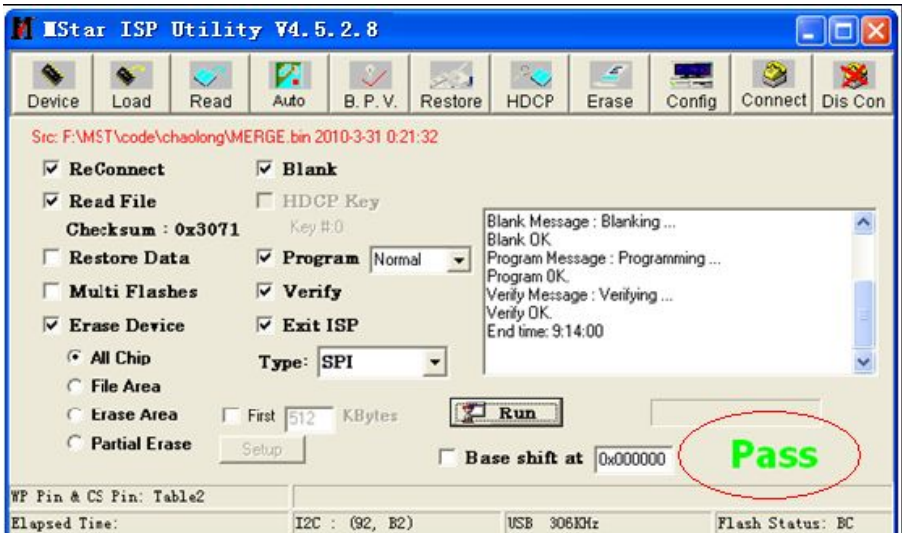


If pass, please power on again to new SW state.

If fail, please power on again to upgrade anew.

### 4.3 Update with USB directly

#### 4.3.1The first upgrading method:

Put “ bin_v59.bin” file in root dictionary in U disk, first power off TV ,Plug in U disk in USB port ,then power on TV by switching on ,TV will update automatic. Red and blue led indicator in TV will flash alternately .When led always show red color, the updating is finished.

Note: if upgrading sw version is same as to TV inside, it will not comply automatic.

#### 4.3.2 The second upgrading method:

power on TV by switching on, put “ bin_v59.bin” file in root dictionary in U disk, Plug in U disk in USB port ,then get in Factory OSD, select “Software update(USB)” , press OK or right in RC,TV will update automatic. Red and blue led indicator in TV will flash alternately .When led always show red color, the updating is finished.

# 5. Power assign & Signal process

## 5.1 MST V59 Power assign

## 5.2 MST V59 Signal process

## 5.3. Troubleshooting

### 5.3.1 Power Supply Diagram

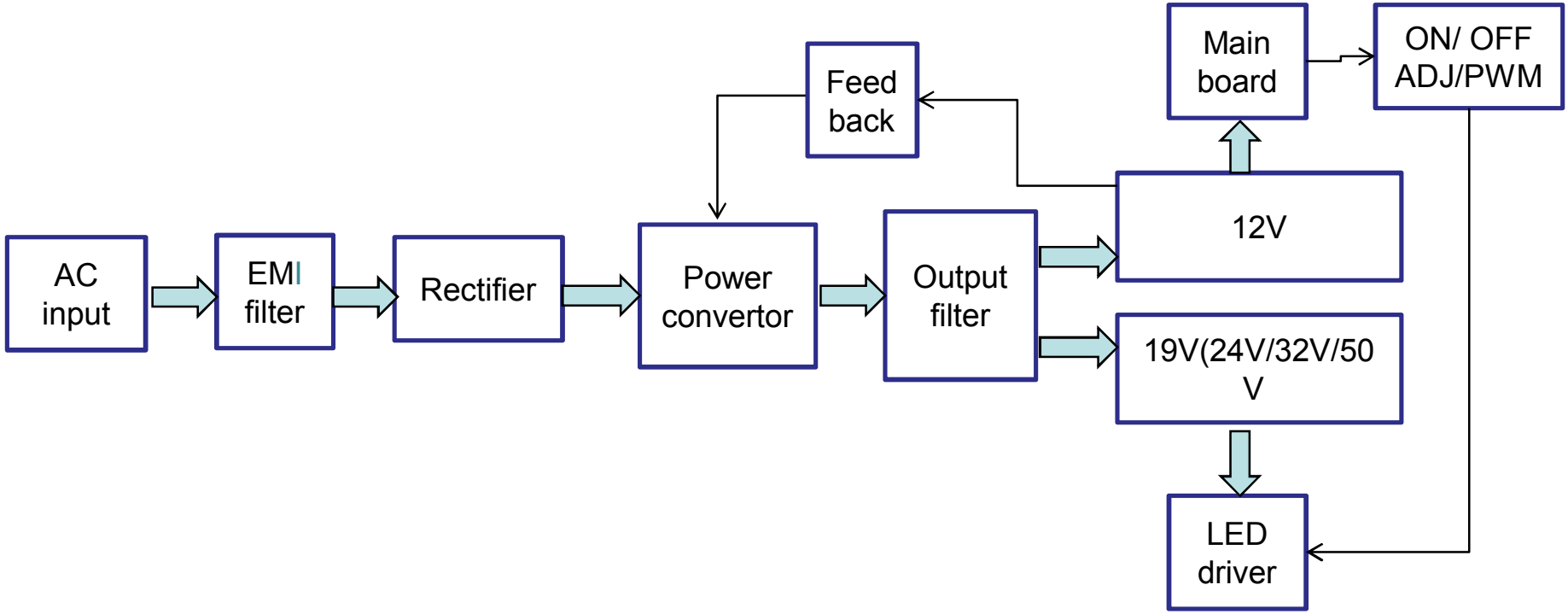

## 5.3.2 Power Supply Trouble 1

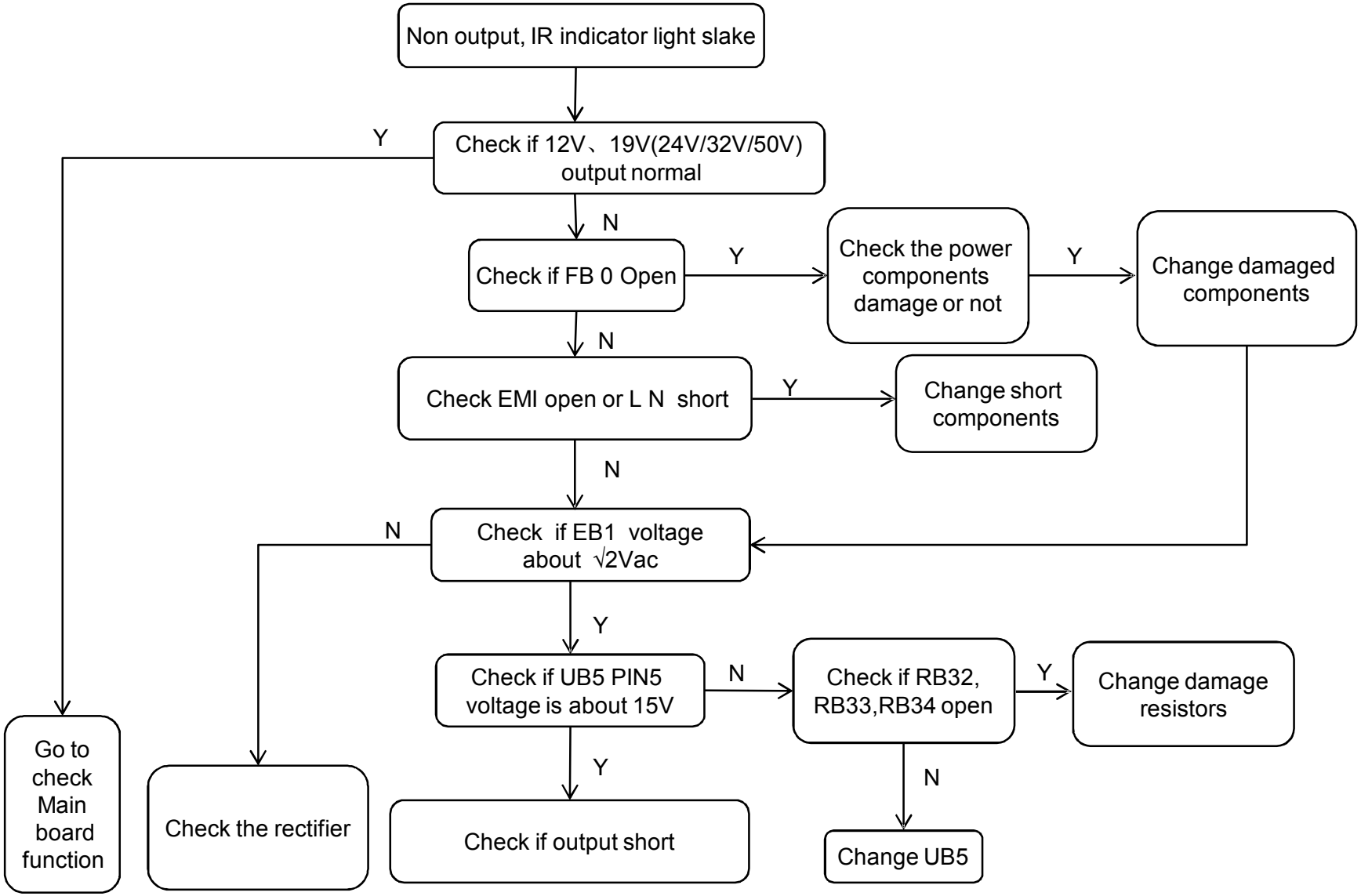

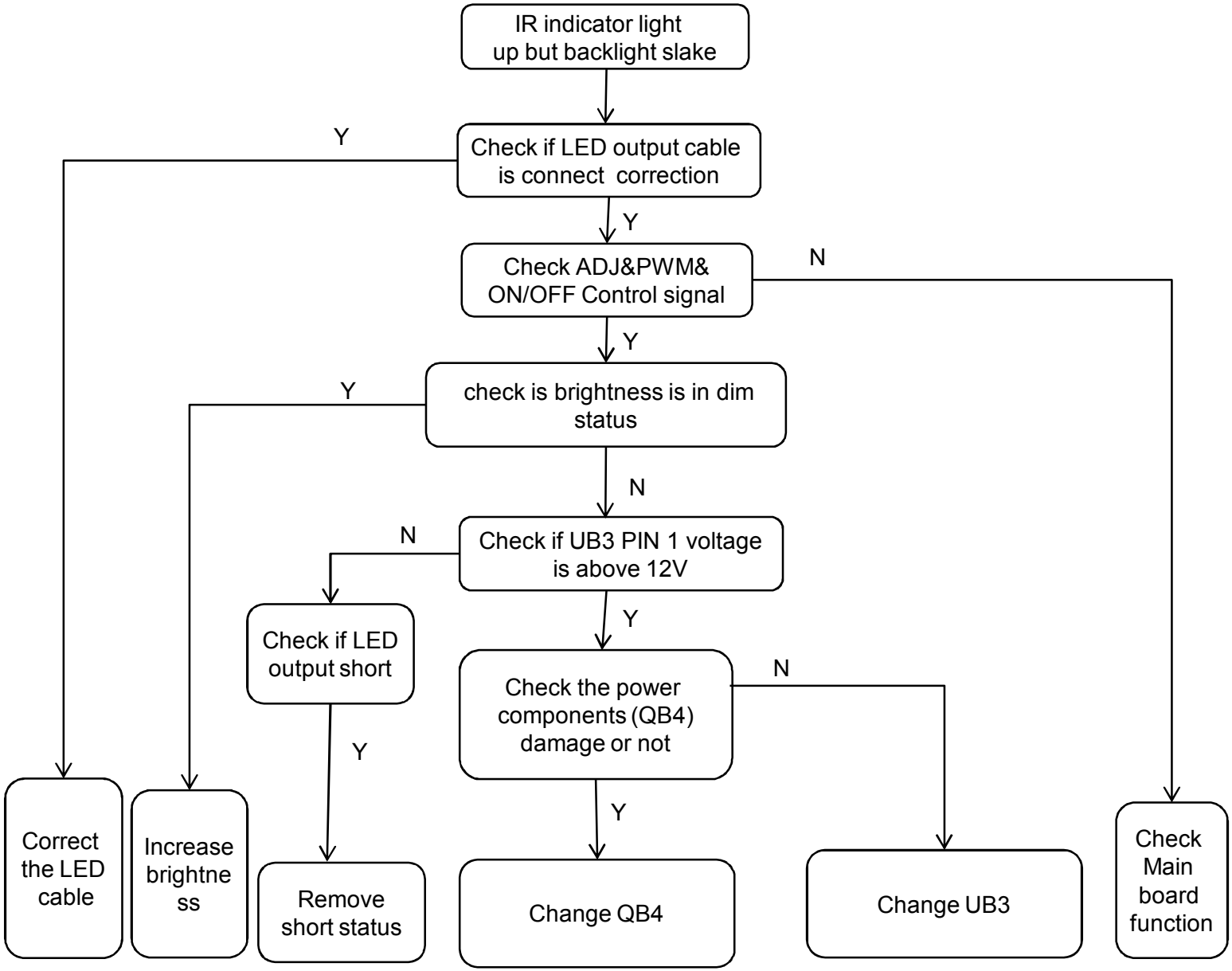
IR indicator light up but backlight slake
Check if LED output cable is connect correction
Y
Y
Check ADJ&PWM& ON/OFF Control signal
N
Y
check is brightness is in dim status
Y
N
Check if UB3 PIN 1 voltage is above 12V
N
Check if LED output short
Y
Check the power components (QB4) damage or not
N
Y
Y
Correct the LED cable
Increase brightne ss
Remove short status
Change QB4
Change UB3
Check Main board function

## 5.3.3 Power Supply Trouble 2

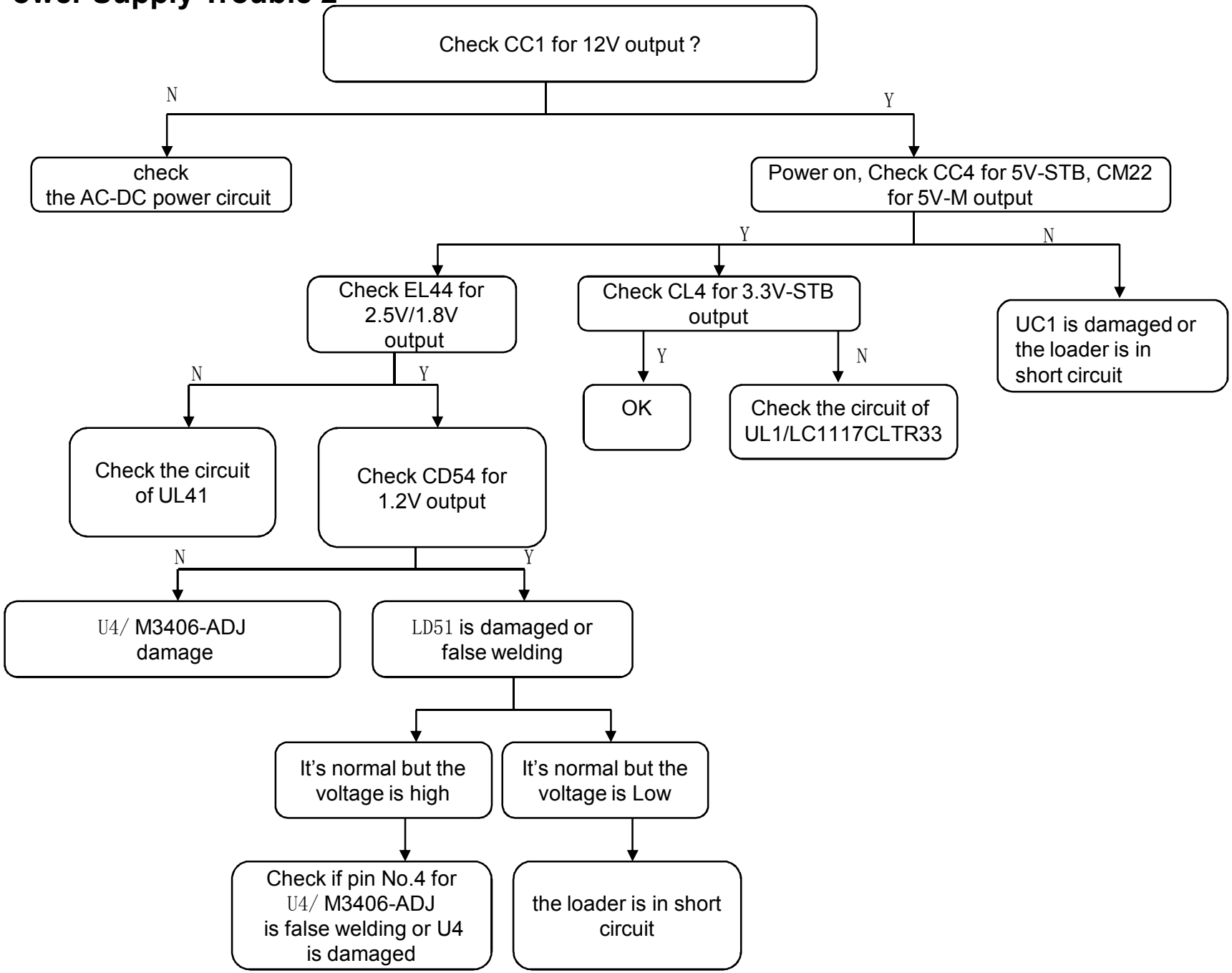

## 5.3.4 Display Trouble（exceptional screen）

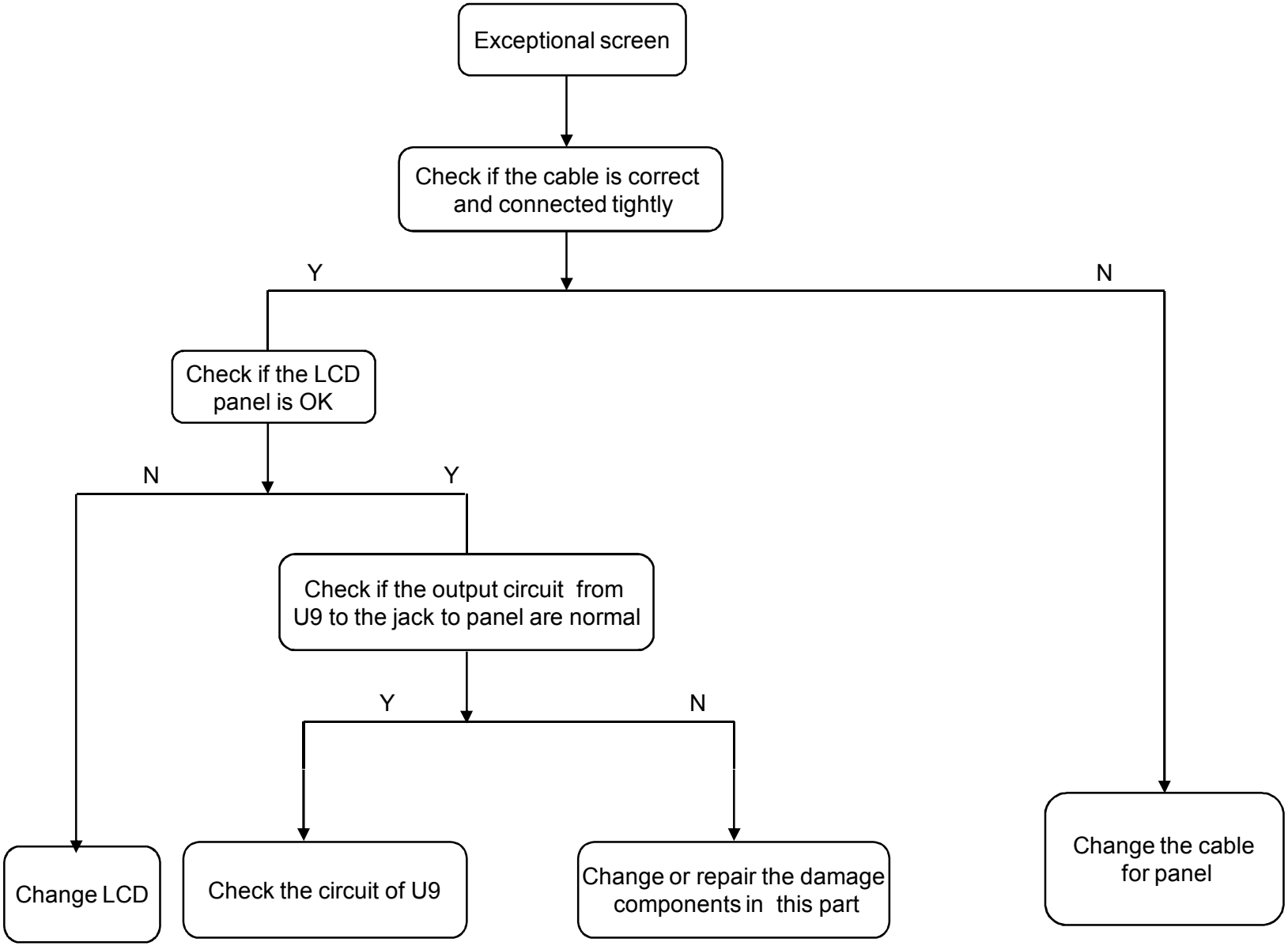

## 5.3.5 Display Trouble （white screen）

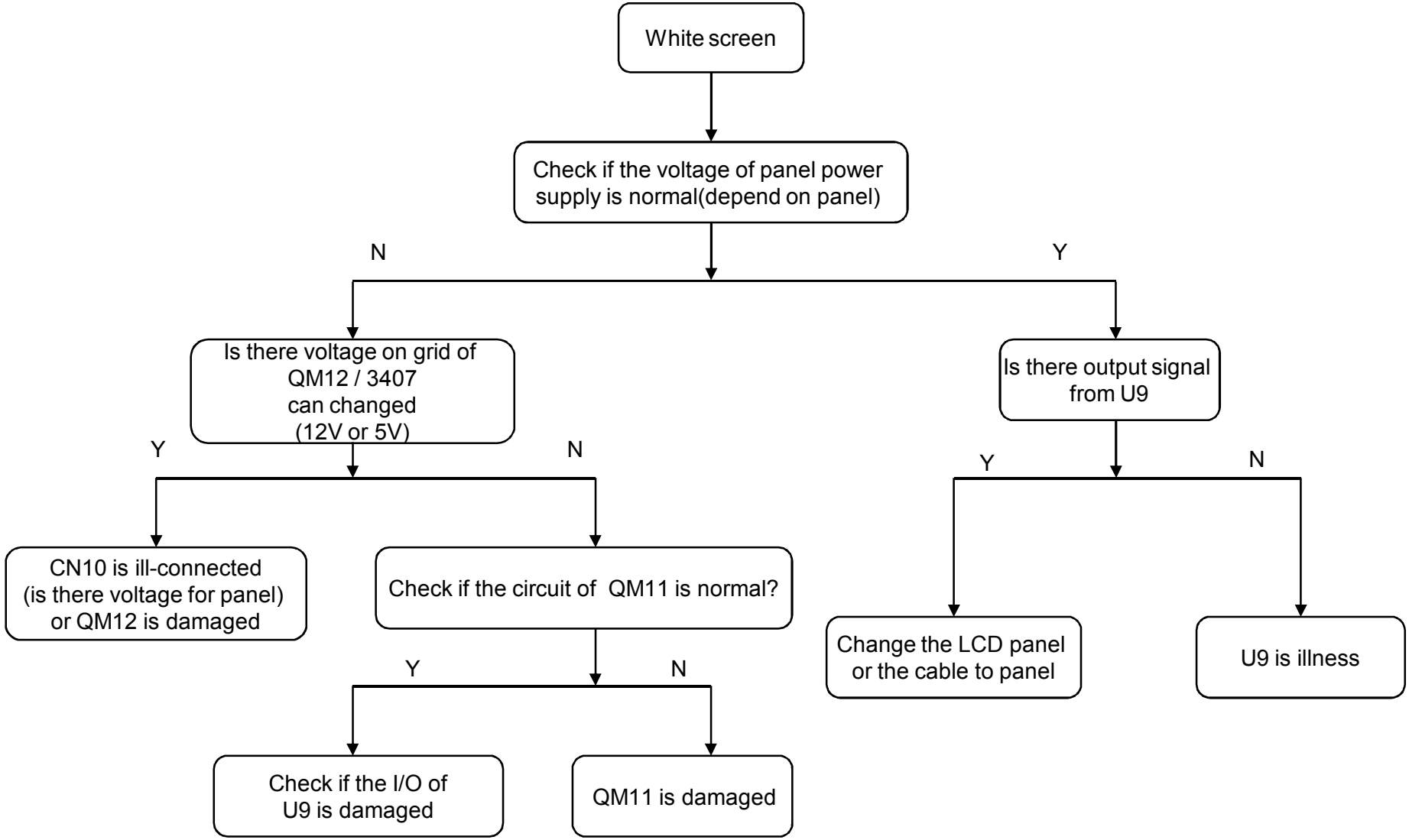

## 5.3.6 Display Trouble（black screen）

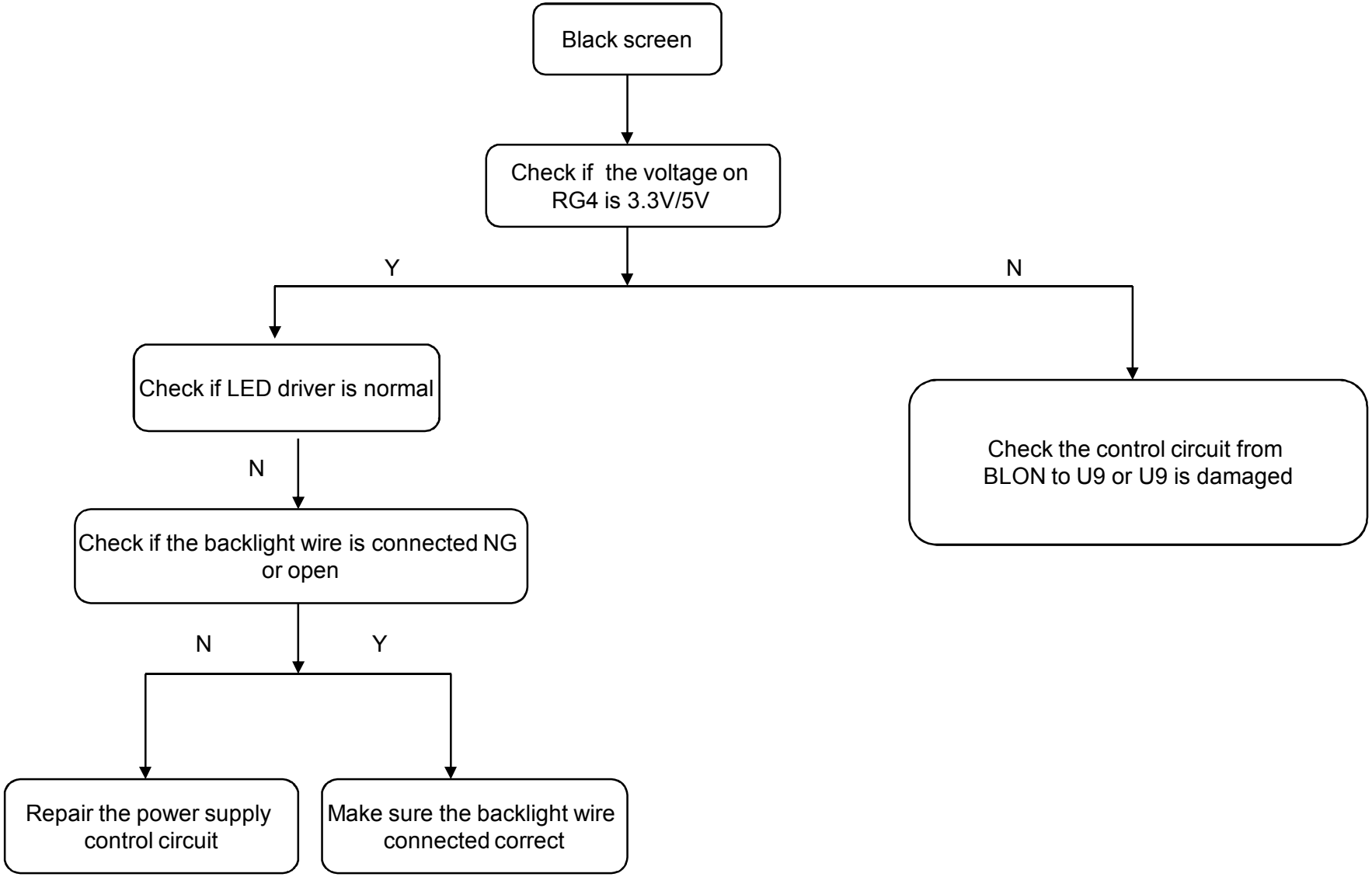

## 5.3.7 Audio Trouble（No sound)

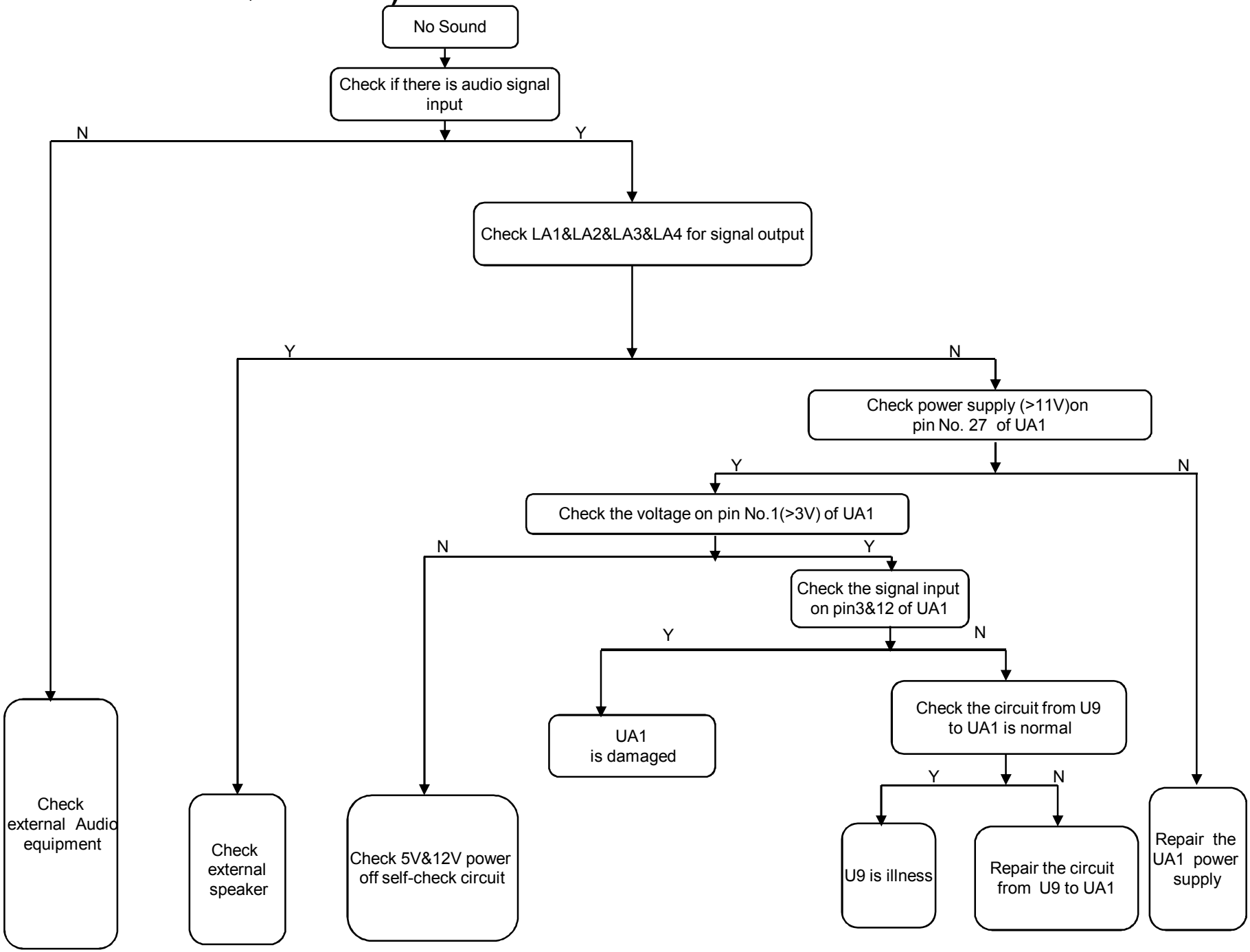

## 5.3.8 Function Trouble（PC）

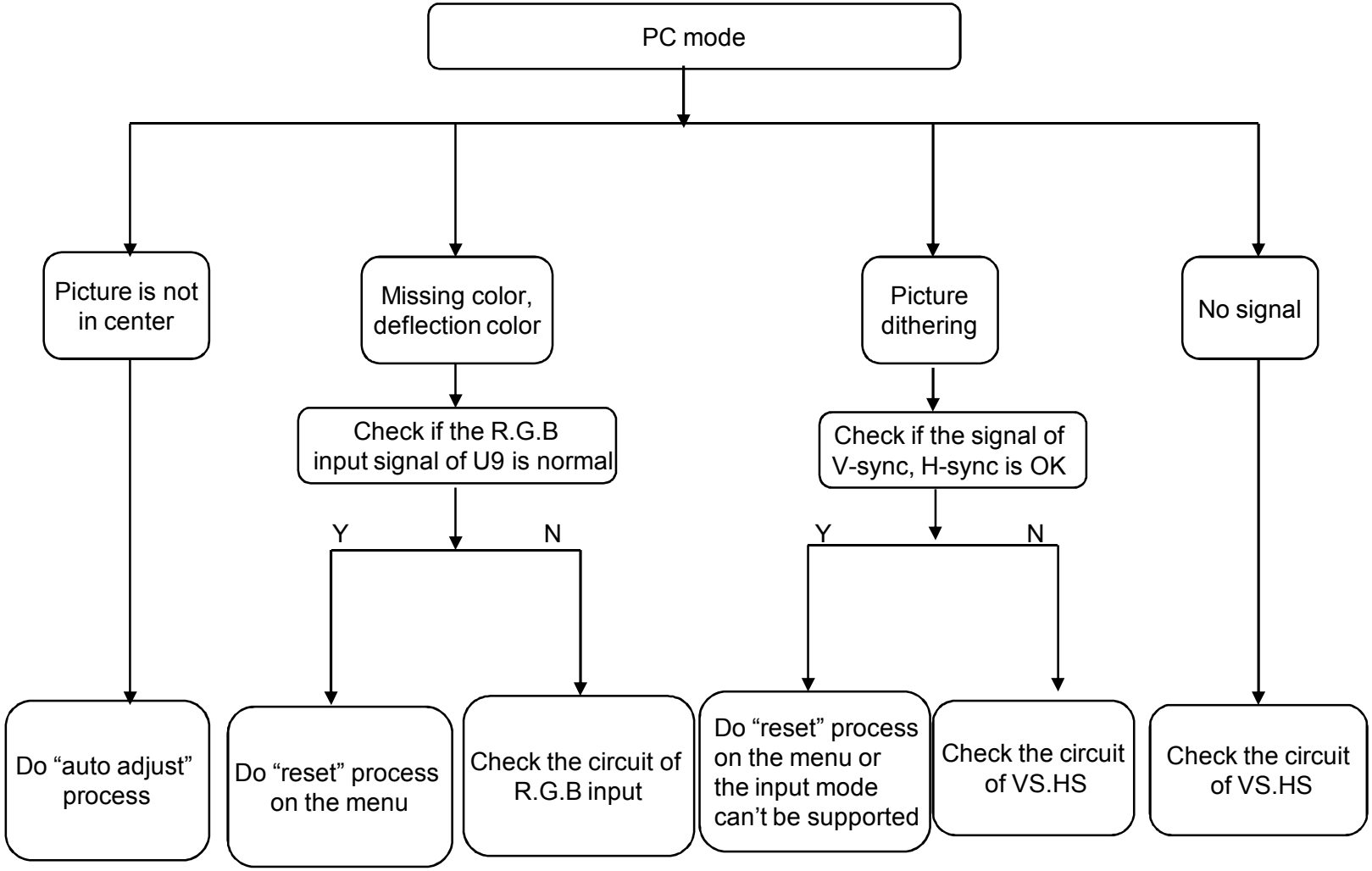

## 5.3.9 Function Trouble（SCART、HDMI、YPbPr、TV）

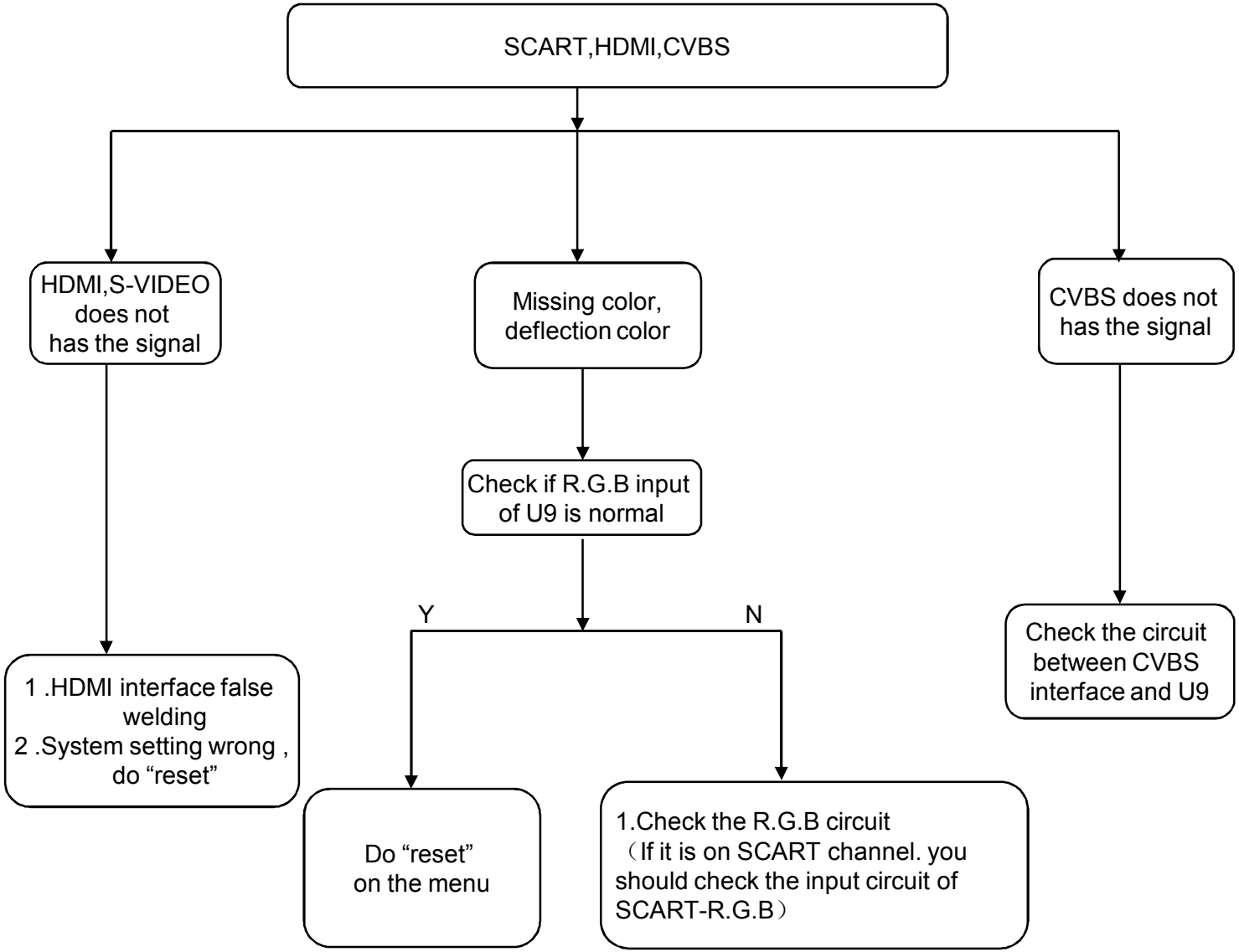

## 6. Schematic circuit diagram

## 7. Explode view

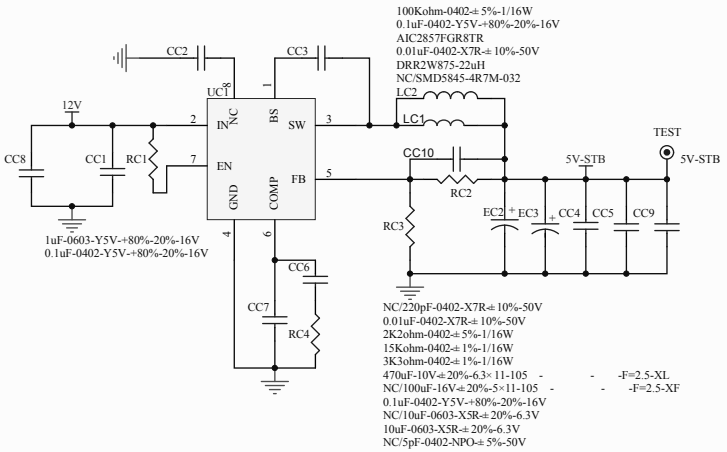
100Kohm-0402-± 5%-1/16W
0.1uF-0402-Y5V-+80%-20%-16V
AIC2857FGR8TR
0.01uF-0402-X7R-± 10%-50V
DRR2W875-22uH
NC/SMD5845-4R7M-032
CC2
CC3
UC1
12V
IN
NC
BS
SW
EN
GND
COMP
FB
LC2
LC1
CC10
RC2
5V-STB
TEST
5V-STB
CC8
CC1
RC1
RC3
EC2
EC3
CC4
CC5
CC9
CC6
CC7
RC4
1uF-0603-Y5V-+80%-20%-16V
0.1uF-0402-Y5V-+80%-20%-16V
NC/220pF-0402-X7R-± 10%-50V
0.01uF-0402-X7R-± 10%-50V
2K2ohm-0402-± 5%-1/16W
15Kohm-0402-± 1%-1/16W
3K3ohm-0402-± 1%-1/16W
470uF-10V-± 20%-6.3× 11-105 - - -F=2.5-XL
NC/100uF-16V-± 20%-5×11-105 - - -F=2.5-XF
0.1uF-0402-Y5V-+80%-20%-16V
NC/10uF-0603-X5R-± 20%-6.3V
10uF-0603-X5R-± 20%-6.3V
NC/5pF-0402-NPO-± 5%-50V

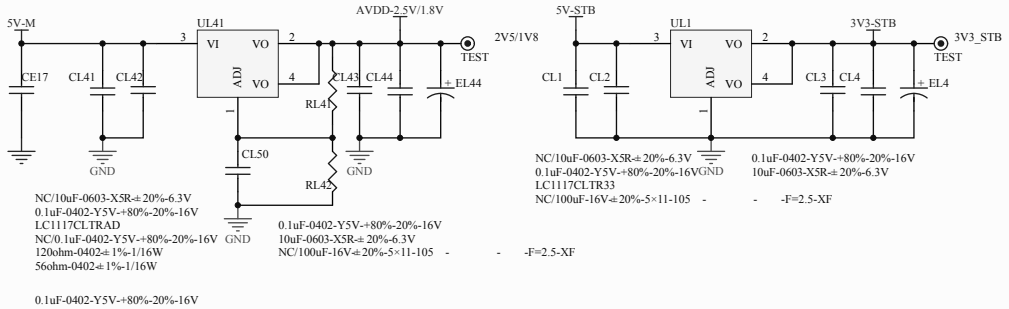
5V-M
UL41
VI
VO
ADJ
VO
AVDD-2.5V/1.8V
TEST
2V5/1V8
CE17
CL41
CL42
CL43
CL44
EL44
RL41
RL42
CL50
GND
NC/10uF-0603-X5R-± 20%-6.3V
0.1uF-0402-Y5V-+80%-20%-16V
LC1117CLTRAD
NC/0.1uF-0402-Y5V-+80%-20%-16V
120ohm-0402-± 1%-1/16W
56ohm-0402-± 1%-1/16W
0.1uF-0402-Y5V-+80%-20%-16V
10uF-0603-X5R-± 20%-6.3V
NC/100uF-16V-± 20%-5×11-105 - - -F=2.5-XF
0.1uF-0402-Y5V-+80%-20%-16V
5V-STB
UL1
3V3-STB
3V3_STB
TEST
CL1
CL2
CL3
CL4
EL4
NC/10uF-0603-X5R-± 20%-6.3V
0.1uF-0402-Y5V-+80%-20%-16V
LC1117CLTR33
NC/100uF-16V-± 20%-5×11-105 - - -F=2.5-XF
0.1uF-0402-Y5V-+80%-20%-16V
10uF-0603-X5R-± 20%-6.3V

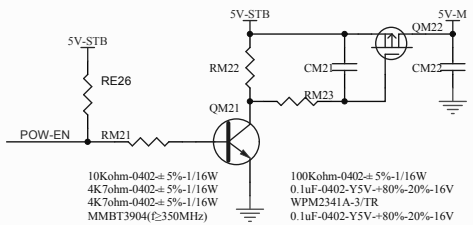
5V-STB
5V-M
QM22
5V-STB
RE26
RM22
CM21
CM22
RM23
QM21
POW-EN
RM21
10Kohm-0402-± 5%-1/16W
4K7ohm-0402-± 5%-1/16W
4K7ohm-0402-± 5%-1/16W
MMBT3904(f≥350MHz)
100Kohm-0402-± 5%-1/16W
0.1uF-0402-Y5V-+80%-20%-16V
WPM2341A-3/TR
0.1uF-0402-Y5V-+80%-20%-16V

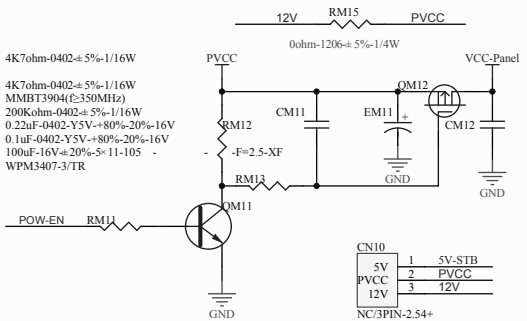
12V
RM15
PVCC
0ohm-1206-± 5%-1/4W
4K7ohm-0402-± 5%-1/16W
PVCC
VCC-Panel
4K7ohm-0402-± 5%-1/16W
MMBT3904(f≥350MHz)
200Kohm-0402-± 5%-1/16W
0.22uF-0402-Y5V-+80%-20%-16V
0.1uF-0402-Y5V-+80%-20%-16V
100uF-16V-± 20%-5× 11-105 - - -F=2.5-XF
WPM3407-3/TR
QM12
CM11
EM11
CM12
RM12
RM13
GND
GND
POW-EN
RM11
QM11
GND
CN10
5V
PVCC
12V
1 5V-STB
2 PVCC
3 12V
NC/3PIN-2.54+

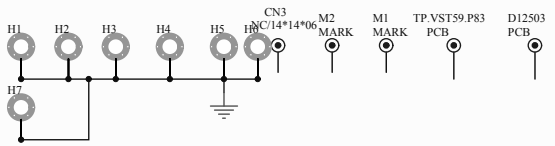
H1
H2
H3
H4
H5
H6
CN3
NC/14*14*06
M2
MARK
M1
MARK
TP.VST59.P83
PCB
D12503
PCB
H7

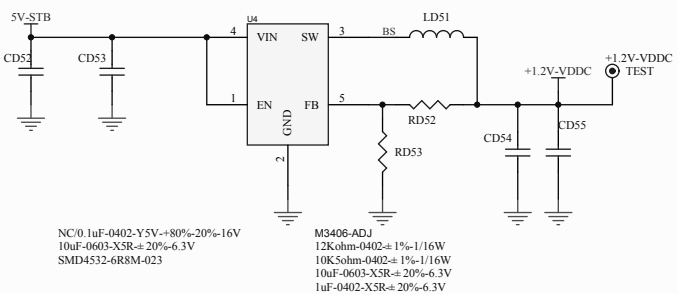
5V-STB
U4
VIN
SW
EN
FB
GND
LD51
BS
CD52
CD53
+1.2V-VDDC
+1.2V-VDDC
TEST
RD52
RD53
CD54
CD55
NC/0.1uF-0402-Y5V-+80%-20%-16V
10uF-0603-X5R-± 20%-6.3V
SMD4532-6R8M-023
M3406-ADJ
12Kohm-0402-± 1%-1/16W
10K5ohm-0402-± 1%-1/16W
10uF-0603-X5R-± 20%-6.3V
1uF-0402-X5R-± 20%-6.3V

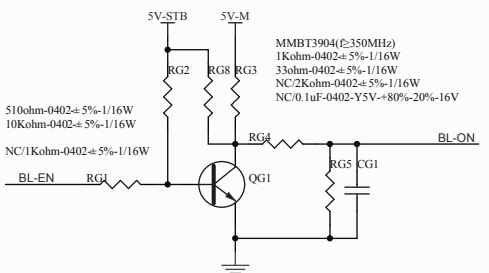
5V-STB
5V-M
MMBT3904(f≥350MHz)
1Kohm-0402-± 5%-1/16W
33ohm-0402-± 5%-1/16W
NC/2Kohm-0402-± 5%-1/16W
NC/0.1uF-0402-Y5V-+80%-20%-16V
RG2
RG8
RG3
510ohm-0402-± 5%-1/16W
10Kohm-0402-± 5%-1/16W
NC/1Kohm-0402-± 5%-1/16W
RG4
BL-ON
BL-EN
RG1
QG1
RG5
CG1

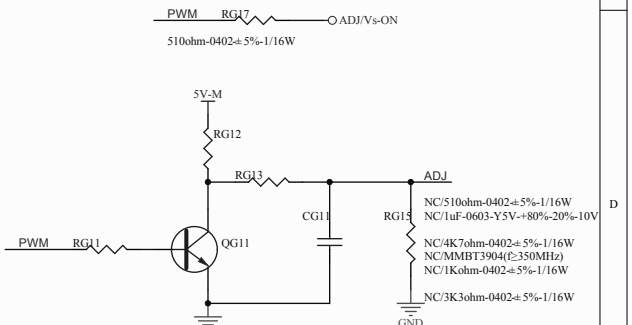
PWM
RG17
ADJ/Vs-ON
510ohm-0402-± 5%-1/16W
5V-M
RG12
RG13
ADJ
NC/510ohm-0402-± 5%-1/16W
NC/1uF-0603-Y5V-+80%-20%-10V
CG11
RG15
PWM
RG11
QG11
NC/4K7ohm-0402-± 5%-1/16W
NC/MMBT3904(f≥350MHz)
NC/1Kohm-0402-± 5%-1/16W
NC/3K3ohm-0402-± 5%-1/16W
GND

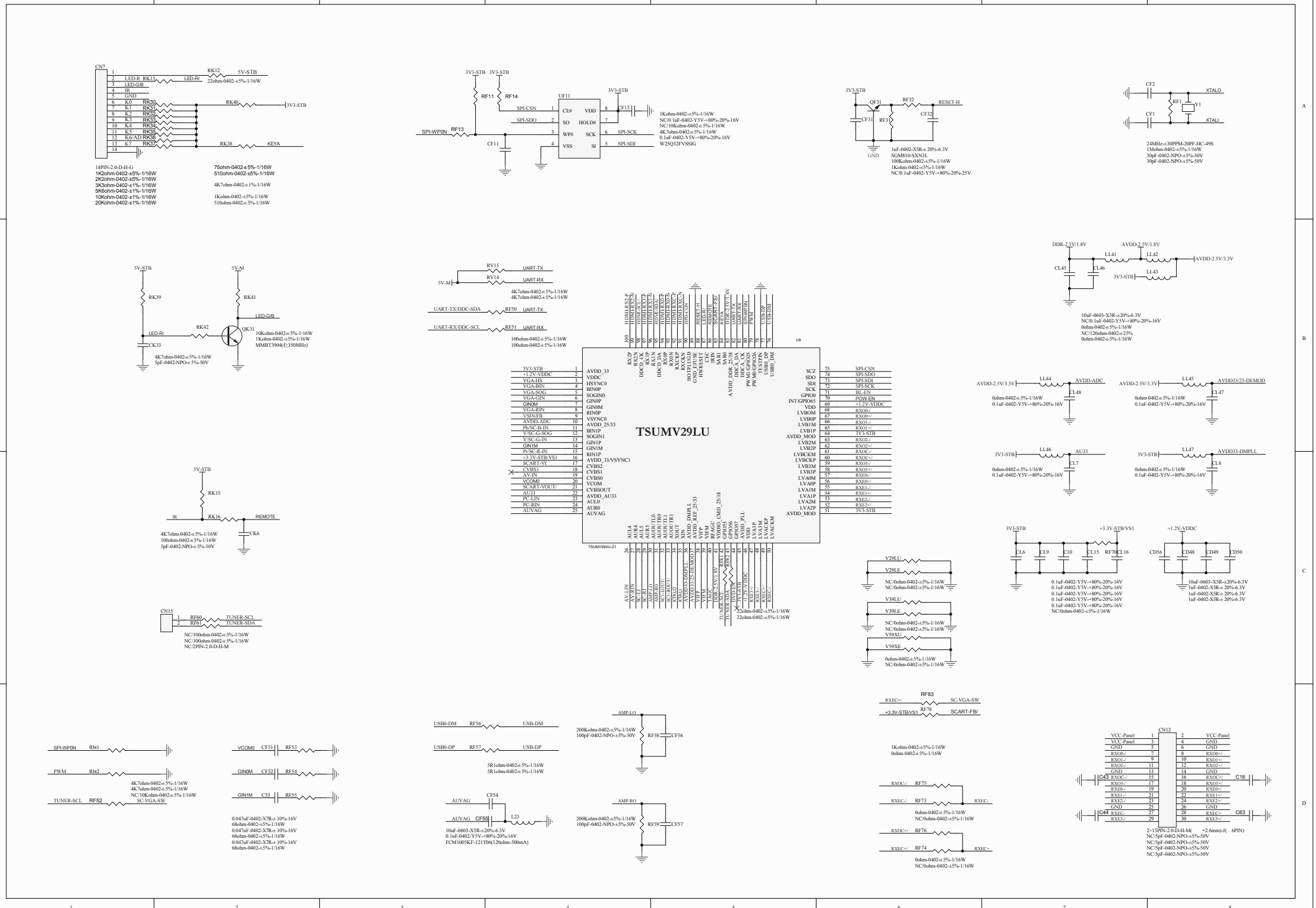
CN7
RK12
5V-STB
22ohm-0402-±5%-1/16W
LED-R
LED-R/
LED-G/B
IR
GND
RK13
RK30
RK31
RK32
RK33
RK34
RK35
RK36
RK37
RK40
3V3-STB
RK38
KEYA
14PIN-2.0-D-H-G
1K2ohm-0402-±5%-1/16W
2K2ohm-0402-±5%-1/16W
3K3ohm-0402-±1%-1/16W
5K6ohm-0402-±1%-1/16W
10Kohm-0402-±1%-1/16W
20Kohm-0402-±1%-1/16W
75ohm-0402-±5%-1/16W
510ohm-0402-±5%-1/16W
4K7ohm-0402-±1%-1/16W
1Kohm-0402-±5%-1/16W
510ohm-0402-±5%-1/16W
3V3-STB
RF11
RF14
RF13
SPI-WP0N
CF11
UF11
CE#
SO
WP#
VSS
VDD
HOLD#
SCK
SI
SPI-CSN
SPI-SDO
SPI-SCK
SPI-SDI
CF13
1Kohm-0402-±5%-1/16W
NC/0.1uF-0402-Y5V-+80%-20%-16V
NC/10Kohm-0402-±5%-1/16W
4K7ohm-0402-±5%-1/16W
0.1uF-0402-Y5V-+80%-20%-16V
W25Q32FVSSIG
QF31
RF32
RESET-H
CF31
RF31
CF32
1uF-0402-X5R-± 20%-6.3V
SGM810-SXN3L
100Kohm-0402-±5%-1/16W
1Kohm-0402-±5%-1/16W
NC/0.1uF-0402-Y5V-+80%-20%-25V
CF2
XTALO
RF1
Y1
CF1
XTALI
24MHz-±30PPM-20PF-HC-49S
1Mohm-0402-±5%-1/16W
30pF-0402-NPO-±5%-50V
30pF-0402-NPO-±5%-50V
5V-STB
5V-M
RK39
RK41
LED-G/B
LED-R/
RK42
QK31
CK33
10Kohm-0402-±5%-1/16W
1Kohm-0402-±5%-1/16W
MMBT3904(F-350MHz)
4K7ohm-0402-±5%-1/16W
5pF-0402-NPO-± 5%-50V
RV15
UART-TX
RV14
UART-RX
4K7ohm-0402-±5%-1/16W
4K7ohm-0402-±5%-1/16W
UART-TX/DDC-SDA
RF50
UART-TX
UART-RX/DDC-SCL
RF51
UART-RX
100ohm-0402-±5%-1/16W
100ohm-0402-±5%-1/16W
TSUMV29LU
TSUMV59XU-Z1
U9
3V3-STB
+1.2V-VDDC
VGA-HS
VGA-BIN
VGA-SOG
VGA-GIN
GIN0M
VGA-RIN
VSIN/FB
AVDD-ADC
Pb/SC-B-IN
Y/SC-G-SOG
Y/SC-G-IN
GIN1M
Pr/SC-R-IN
-3.3V-STB/VS1
SCART-V1
CVBS1
AV-IN
VCOM0
SCART-VOUT/
AU33
PC-LIN
PC-RIN
AUVAG
AVDD_33
VDDC
HSYNC0
BIN0P
SOGIN0
GIN0P
GIN0M
RIN0P
VSYNC0
AVDD_25/33
BIN1P
SOGIN1
GIN1P
GIN1M
RIN1P
AVDD_33/VSYNC1
CVBS2
CVBS1
CVBS0
VCOM
CVBSOUT
AVDD_AU33
AUL0
AUR0
AUVAG
SCZ
SDO
SDI
SCK
GPIO0
INT/GPIO65
VDD
LVB0M
LVB0P
LVB1M
LVB1P
AVDD_MOD
LVB2M
LVB2P
LVBCKM
LVBCKP
LVB3M
LVB3P
LVA0M
LVA0P
LVA1M
LVA1P
LVA2M
LVA2P
AVDD_MOD
SPI-CSN
SPI-SDO
SPI-SDI
SPI-SCK
BL-EN
POW-EN
+1.2V-VDDC
RX00-/
RX00+/-
RX01-/
RX01+/
3V3-STB
RX02-/
RX02+/
RX0C-/
RX0C+/
RX03-/
RX03+/
RXE0-/
RXE0+/
RXE1-/
RXE1+/
RXE2-/
RXE2+/
3V3-STB
AV-LIN
AV-PIN
SC-R1
SC-B1
AMP-LO
AMP-RO
SC1-LOUT/
SC1-ROUT/
AVDD12
AVDD33-DMPLL
AVDD33-25/3.3V
VIFP
VIFM
VIFM
DDC-2.5V/1.8V
TUNER-SCL
TUNER-SDA
+3.3V-STB
+5.3V-VDDC
SC1-R
SC1-G
RXEC-/
RXEC+/
22ohm-0402-±5%-1/16W
22ohm-0402-±5%-1/16W
DDR-2.5V/1.8V
AVDD-2.5V/1.8V
LL41
LL42
AVDD-2.5V/3.3V
CL45
CL46
3V3-STB
LL43
10uF-0603-X5R-±20%-6.3V
NC/0.1uF-0402-Y5V-+80%-20%-16V
0ohm-0402-±5%-1/16W
NC/120ohm-0402-±25%
0ohm-0402-±5%-1/16W
AVDD-2.5V/3.3V
LL44
AVDD-ADC
CL48
0ohm-0402-±5%-1/16W
0.1uF-0402-Y5V-+80%-20%-16V
AVDD-2.5V/3.3V
LL45
AVDD33/25-DEMOD
CL47
0ohm-0402-±5%-1/16W
0.1uF-0402-Y5V-+80%-20%-16V
3V3-STB
LL46
AU33
CL7
0ohm-0402-±5%-1/16W
0.1uF-0402-Y5V-+80%-20%-16V
3V3-STB
LL47
AVDD33-DMPLL
CL8
0ohm-0402-±5%-1/16W
0.1uF-0402-Y5V-+80%-20%-16V
5V-STB
RK15
IR
RK16
REMOTE
CK6
4K7ohm-0402-±5%-1/16W
100ohm-0402-±5%-1/16W
5pF-0402-NPO-± 5%-50V
CN15
RF60
TUNER-SCL
RF61
TUNER-SDA
NC/100ohm-0402-±5%-1/16W
NC/100ohm-0402-±5%-1/16W
NC/2PIN-2.0-D-H-M
V29LU
V29LE
NC/0ohm-0402-±5%-1/16W
NC/0ohm-0402-±5%-1/16W
V39LU
V39LE
NC/0ohm-0402-±5%-1/16W
NC/0ohm-0402-±5%-1/16W
V59XU
V59XE
0ohm-0402-±5%-1/16W
NC/0ohm-0402-±5%-1/16W
3V3-STB
+3.3V-STB/VS1
CL6
CL9
CL10
CL15
RF70
CL16
0.1uF-0402-Y5V-+80%-20%-16V
0.1uF-0402-Y5V-+80%-20%-16V
0.1uF-0402-Y5V-+80%-20%-16V
0.1uF-0402-Y5V-+80%-20%-16V
0.1uF-0402-Y5V-+80%-20%-16V
NC/0ohm-0402-±5%-1/16W
+1.2V-VDDC
CD56
CD48
CD49
CD50
10uF-0603-X5R-±20%-6.3V
1uF-0402-X5R-± 20%-6.3V
1uF-0402-X5R-± 20%-6.3V
1uF-0402-X5R-± 20%-6.3V
SPI-WP0N
Rht1
PWM
Rht2
TUNER-SCL
RF52
4K7ohm-0402-±5%-1/16W
4K7ohm-0402-±5%-1/16W
NC/10Kohm-0402-±5%-1/16W
SC-VGA-SW
VCOM0
CF51
RF53
GIN0M
CF52
RF54
GIN1M
CS3
RF55
0.047uF-0402-X7R-± 10%-16V
68ohm-0402-±5%-1/16W
0.047uF-0402-X7R-± 10%-16V
68ohm-0402-±5%-1/16W
0.047uF-0402-X7R-± 10%-16V
68ohm-0402-±5%-1/16W
USB0-DM
RF56
USB-DM
USB0-DP
RF57
USB-DP
5R1ohm-0402-±5%-1/16W
5R1ohm-0402-±5%-1/16W
AUVAG
CF54
AUVAG
CF55
L23
10uF-0603-X5R-±20%-6.3V
0.1uF-0402-Y5V-+80%-20%-16V
FCM1005KF-121T06(120ohm-500mA)
AMP-LO
200Kohm-0402-±5%-1/16W
100pF-0402-NPO-±5%-50V
RF58
CF56
AMP-RO
200Kohm-0402-±5%-1/16W
100pF-0402-NPO-±5%-50V
RF59
CF57
RXEC+/
RF83
SC-VGA-SW
+3.3V-STB/VS1
RF78
SCART-FB/
1Kohm-0402-±5%-1/16W
0ohm-0402-±5%-1/16W
RXOC-/
RF75
RXEC-/
RF73
RXEC-
0ohm-0402-±5%-1/16W
NC/0ohm-0402-±5%-1/16W
RXOC+/
RF76
RXEC+/
RF74
RXEC+
0ohm-0402-±5%-1/16W
NC/0ohm-0402-±5%-1/16W
CN12
VCC-Panel
GND
RX00-/
RX00+/
RX01-/
RX01+/
RX02-/
RX02+/
RX0C-/
RX0C+/
RX03-/
RX03+/
RXE0-/
RXE0+/
RXE1-/
RXE1+/
RXE2-/
RXE2+/
RXEC-
RXEC+
RXE3-/
RXE3+/
C43
C44
C16
C63
2×15PIN-2.0-D-H-M(  =2.6mm)-J(  6PIN)
NC/5pF-0402-NPO-±5%-50V
NC/5pF-0402-NPO-±5%-50V
NC/5pF-0402-NPO-±5%-50V
NC/5pF-0402-NPO-±5%-50V
NC/5pF-0402-NPO-±5%-50V

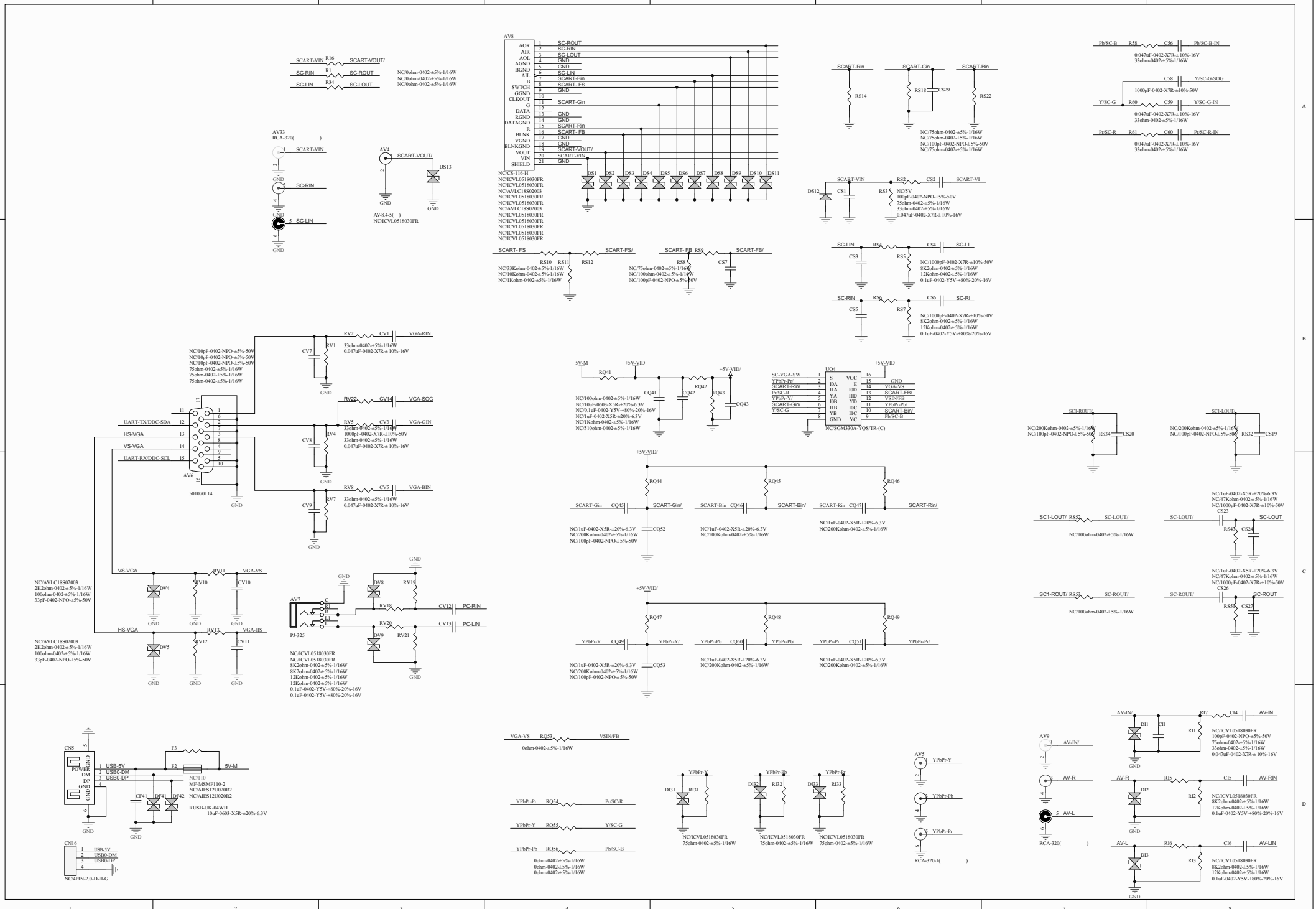
SCART-VIN R16 SCART-VOUT/
SC-RIN R1 SC-ROUT
SC-LIN R34 SC-LOUT
NC/0ohm-0402-±5%-1/16W
NC/0ohm-0402-±5%-1/16W
NC/0ohm-0402-±5%-1/16W
AV33
RCA-320( )
SCART-VIN
SC-RIN
SC-LIN
GND
AV4
SCART-VOUT/
DS13
AV-8.4-5( )
NC/ICVL0518030FR
AV8
AOR
AIR
AOL
AGND
BGND
AIL
B
SWTCH
GGND
CLKOUT
G
DATA
RGND
DATAGND
R
BLNK
VGND
BLNKGND
VOUT
VIN
SHIELD
SC-ROUT
SC-RIN
SC-LOUT
GND
GND
GND
SCART-Gin
GND
SCART-Rin
GND
SCART-FB
GND
GND
SCART-VOUT/
SCART-VIN
GND
NC/CS-116-H
NC/ICVL0518030FR
NC/ICVL0518030FR
NC/AVLC18S02003
NC/ICVL0518030FR
NC/AVLC18S02003
NC/ICVL0518030FR
NC/ICVL0518030FR
NC/ICVL0518030FR
NC/ICVL0518030FR
NC/ICVL0518030FR
DS1 DS2 DS3 DS4 DS5 DS6 DS7 DS8 DS9 DS10 DS11
SCART-Rin
RS14
SCART-Gin
RS18 CS29
SCART-Bin
RS22
NC/75ohm-0402-±5%-1/16W
NC/75ohm-0402-±5%-1/16W
NC/100pF-0402-NPO-±5%-50V
NC/75ohm-0402-±5%-1/16W
Pb/SC-B R58 C56 Pb/SC-B-IN
0.047uF-0402-X7R-± 10%-16V
33ohm-0402-±5%-1/16W
C58 Y/SC-G-SOG
1000pF-0402-X7R-±10%-50V
Y/SC-G R60 C59 Y/SC-G-IN
0.047uF-0402-X7R-± 10%-16V
33ohm-0402-±5%-1/16W
Pr/SC-R R61 C60 Pr/SC-R-IN
0.047uF-0402-X7R-± 10%-16V
33ohm-0402-±5%-1/16W
SCART-VIN RS2 CS2 SCART-VI
DS12 CS1 RS3
NC/5V
100pF-0402-NPO-±5%-50V
75ohm-0402-±5%-1/16W
33ohm-0402-±5%-1/16W
0.047uF-0402-X7R-± 10%-16V
SCART- FS RS10 RS11 RS12 SCART-FS/
NC/33Kohm-0402-±5%-1/16W
NC/10Kohm-0402-±5%-1/16W
NC/1Kohm-0402-±5%-1/16W
SCART- FB RS9 SCART-FB/
RS8 CS7
NC/75ohm-0402-±5%-1/16W
NC/100ohm-0402-±5%-1/16W
NC/100pF-0402-NPO-±5%-50V
SC-LIN RS4 CS4 SC-LI
CS3 RS5
NC/1000pF-0402-X7R-±10%-50V
8K2ohm-0402-±5%-1/16W
12Kohm-0402-±5%-1/16W
0.1uF-0402-Y5V-+80%-20%-16V
SC-RIN RS6 CS6 SC-RI
CS5 RS7
NC/1000pF-0402-X7R-±10%-50V
8K2ohm-0402-±5%-1/16W
12Kohm-0402-±5%-1/16W
0.1uF-0402-Y5V-+80%-20%-16V
NC/10pF-0402-NPO-±5%-50V
NC/10pF-0402-NPO-±5%-50V
NC/10pF-0402-NPO-±5%-50V
75ohm-0402-±5%-1/16W
75ohm-0402-±5%-1/16W
75ohm-0402-±5%-1/16W
RV2 CV1 VGA-RIN
CV7 RV1
33ohm-0402-±5%-1/16W
0.047uF-0402-X7R-± 10%-16V
GND
RV22 CV14 VGA-SOG
UART-TX/DDC-SDA
HS-VGA
VS-VGA
UART-RX/DDC-SCL
AV6
501070114
RV5 CV3 VGA-GIN
CV8 RV4
33ohm-0402-±5%-1/16W
1000pF-0402-X7R-±10%-50V
33ohm-0402-±5%-1/16W
0.047uF-0402-X7R-± 10%-16V
RV8 CV5 VGA-BIN
CV9 RV7
33ohm-0402-±5%-1/16W
0.047uF-0402-X7R-± 10%-16V
5V-M
+5V-VID
RQ41
RQ42
RQ43
CQ41
CQ42
CQ43
+5V-VID/
NC/100ohm-0402-±5%-1/16W
NC/10uF-0603-X5R-±20%-6.3V
NC/0.1uF-0402-Y5V-+80%-20%-16V
NC/1uF-0402-X5R-±20%-6.3V
NC/1Kohm-0402-±5%-1/16W
NC/510ohm-0402-±5%-1/16W
UQ4
SC-VGA-SW
YPbPr-Pr
SCART-Rin/
Pr/SC-R
YPbPr-Y/
SCART-Gin/
Y/SC-G
S
I0A
I1A
YA
I0B
I1B
YB
GND
VCC
E
I0D
I1D
YD
I0C
I1C
YC
GND
VGA-VS
SCART-FB/
VSIN/FB
YPbPr-Pb
SCART-Bin/
Pb/SC-B
NC/SGM330A-YQS/TR-(C)
SC1-ROUT
NC/200Kohm-0402-±5%-1/16W
NC/100pF-0402-NPO-±5%-50V
RS34 CS20
SC1-LOUT
NC/200Kohm-0402-±5%-1/16W
NC/100pF-0402-NPO-±5%-50V
RS32 CS19
+5V-VID/
RQ44 RQ45 RQ46
SCART-Gin CQ45 SCART-Gin/
SCART-Bin CQ46 SCART-Bin/
SCART-Rin CQ47 SCART-Rin/
NC/1uF-0402-X5R-±20%-6.3V
NC/200Kohm-0402-±5%-1/16W
CQ52
NC/1uF-0402-X5R-±20%-6.3V
NC/200Kohm-0402-±5%-1/16W
NC/1uF-0402-X5R-±20%-6.3V
NC/200Kohm-0402-±5%-1/16W
NC/1uF-0402-X5R-±20%-6.3V
NC/47Kohm-0402-±5%-1/16W
NC/1000pF-0402-X7R-±10%-50V
SC1-LOUT/ RS53 SC-LOUT/
NC/100ohm-0402-±5%-1/16W
SC-LOUT/ CS23 SC-LOUT
RS45 CS24
NC/1uF-0402-X5R-±20%-6.3V
NC/47Kohm-0402-±5%-1/16W
NC/1000pF-0402-X7R-±10%-50V
SC1-ROUT/ RS53 SC-ROUT/
NC/100ohm-0402-±5%-1/16W
SC-ROUT/ CS26 SC-ROUT
RS55 CS27
VS-VGA
RV11 VGA-VS
DV4 RV10 CV10
NC/AVLC18S02003
2K2ohm-0402-±5%-1/16W
100ohm-0402-±5%-1/16W
33pF-0402-NPO-±5%-50V
HS-VGA
RV13 VGA-HS
DV5 RV12 CV11
NC/AVLC18S02003
2K2ohm-0402-±5%-1/16W
100ohm-0402-±5%-1/16W
33pF-0402-NPO-±5%-50V
AV7
C
R1
R
L1
L
PJ-325
DV8 RV19
RV18 CV12 PC-RIN
RV20 CV13 PC-LIN
DV9 RV21
NC/ICVL0518030FR
NC/ICVL0518030FR
8K2ohm-0402-±5%-1/16W
8K2ohm-0402-±5%-1/16W
12Kohm-0402-±5%-1/16W
12Kohm-0402-±5%-1/16W
0.1uF-0402-Y5V-+80%-20%-16V
0.1uF-0402-Y5V-+80%-20%-16V
+5V-VID/
RQ47 RQ48 RQ49
YPbPr-Y CQ49 YPbPr-Y/
YPbPr-Pb CQ50 YPbPr-Pb/
YPbPr-Pr CQ51 YPbPr-Pr/
NC/1uF-0402-X5R-±20%-6.3V
NC/200Kohm-0402-±5%-1/16W
NC/100pF-0402-NPO-±5%-50V
CQ53
NC/1uF-0402-X5R-±20%-6.3V
NC/200Kohm-0402-±5%-1/16W
NC/1uF-0402-X5R-±20%-6.3V
NC/200Kohm-0402-±5%-1/16W
CN5
POWER
DM
DP
GND
USB-5V
USB0-DM
USB0-DP
F3
F2
5V-M
NC/110
MF-MSMF110-2
NC/AIES12U020R2
NC/AIES12U020R2
RUSB-UK-04WH
10uF-0603-X5R-±20%-6.3V
CF41 DF41 DF42
CN16
USB-5V
USB0-DM
USB0-DP
NC/4PIN-2.0-D-H-G
VGA-VS RQ53 VSIN/FB
0ohm-0402-±5%-1/16W
YPbPr-Pr RQ54 Pr/SC-R
YPbPr-Y RQ55 Y/SC-G
YPbPr-Pb RQ56 Pb/SC-B
0ohm-0402-±5%-1/16W
0ohm-0402-±5%-1/16W
0ohm-0402-±5%-1/16W
YPbPr-Y
DI31 RI31
NC/ICVL0518030FR
75ohm-0402-±5%-1/16W
YPbPr-Pb
DI32 RI32
NC/ICVL0518030FR
75ohm-0402-±5%-1/16W
YPbPr-Pr
DI33 RI33
NC/ICVL0518030FR
75ohm-0402-±5%-1/16W
AV5
YPbPr-Y
YPbPr-Pb
YPbPr-Pr
RCA-320-1( )
AV9
AV-IN/
AV-R
AV-L
RCA-320( )
AV-IN/ RI7 CI4 AV-IN
DI1 CI1 RI1
NC/ICVL0518030FR
100pF-0402-NPO-±5%-50V
75ohm-0402-±5%-1/16W
33ohm-0402-±5%-1/16W
0.047uF-0402-X7R-± 10%-16V
AV-R RI5 CI5 AV-RIN
DI2 RI2
NC/ICVL0518030FR
8K2ohm-0402-±5%-1/16W
12Kohm-0402-±5%-1/16W
0.1uF-0402-Y5V-+80%-20%-16V
AV-L RI6 CI6 AV-LIN
DI3 RI3
NC/ICVL0518030FR
8K2ohm-0402-±5%-1/16W
12Kohm-0402-±5%-1/16W
0.1uF-0402-Y5V-+80%-20%-16V
GND

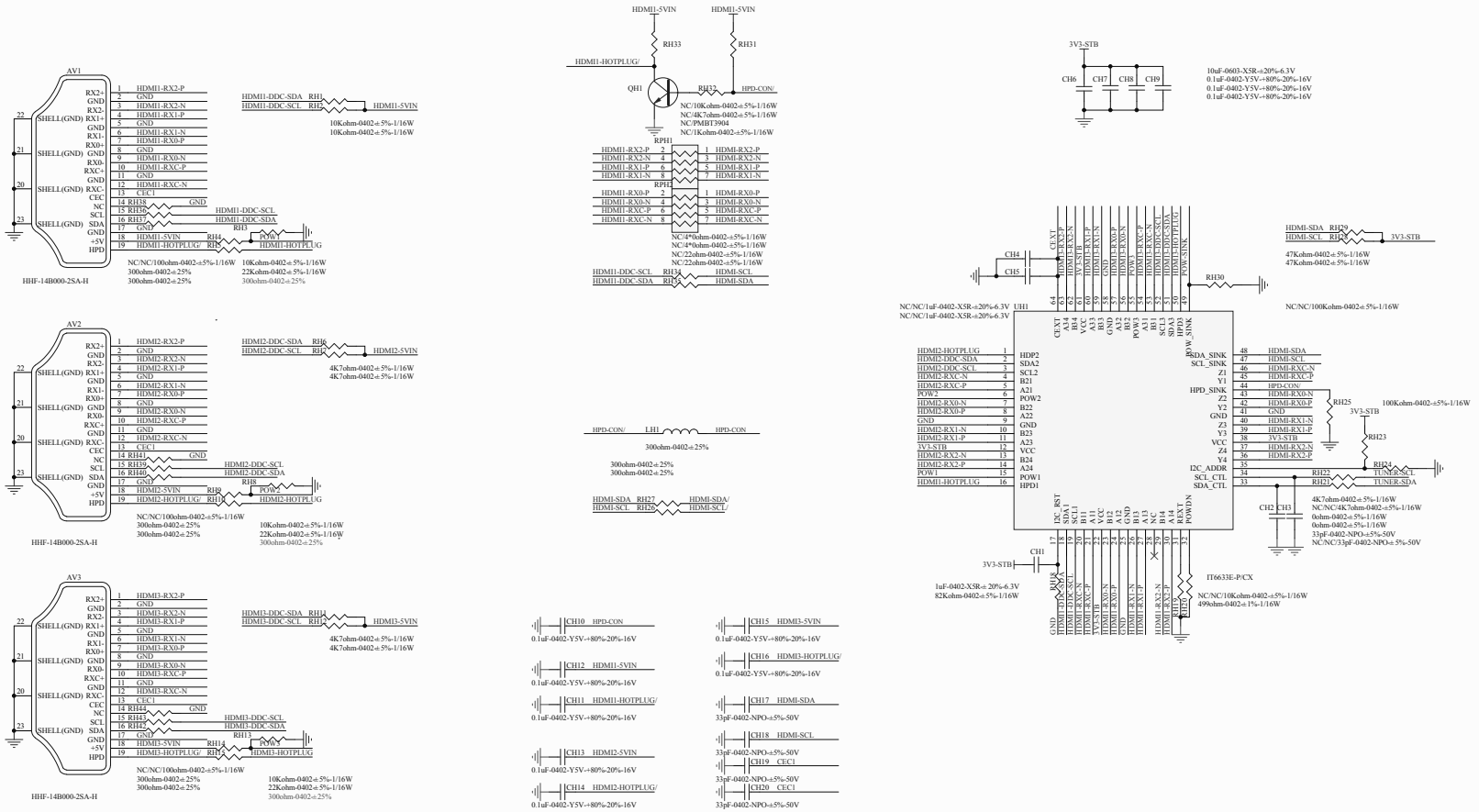
AV1
HHF-14B000-2SA-H
HDMI1-RX2-P
HDMI1-DDC-SDA RH1
HDMI1-DDC-SCL RH2
HDMI1-5VIN
10Kohm-0402-±5%-1/16W
NC/NC/100ohm-0402-±5%-1/16W
300ohm-0402-±25%
22Kohm-0402-±5%-1/16W
HDMI1-5VIN
RH33
RH31
HDMI1-HOTPLUG/
QH1
RH32
HPD-CON/
NC/10Kohm-0402-±5%-1/16W
NC/4K7ohm-0402-±5%-1/16W
NC/PMBT3904
NC/1Kohm-0402-±5%-1/16W
RPH1
RPH2
NC/4*0ohm-0402-±5%-1/16W
NC/4*0ohm-0402-±5%-1/16W
NC/22ohm-0402-±5%-1/16W
HDMI1-DDC-SCL RH34
HDMI1-DDC-SDA RH35
HDMI-SCL
HDMI-SDA
3V3-STB
CH6 CH7 CH8 CH9
10uF-0603-X5R-±20%-6.3V
0.1uF-0402-Y5V-+80%-20%-16V
0.1uF-0402-Y5V-+80%-20%-16V
0.1uF-0402-Y5V-+80%-20%-16V
HDMI-SDA RH29
HDMI-SCL RH28
47Kohm-0402-±5%-1/16W
47Kohm-0402-±5%-1/16W
CH4
CH5
RH30
NC/NC/100Kohm-0402-±5%-1/16W
NC/NC/1uF-0402-X5R-±20%-6.3V
UH1
RH25
100Kohm-0402-±5%-1/16W
RH23
RH24
TUNER-SCL
RH22
TUNER-SDA
CH2 CH3
4K7ohm-0402-±5%-1/16W
NC/NC/4K7ohm-0402-±5%-1/16W
0ohm-0402-±5%-1/16W
0ohm-0402-±5%-1/16W
33pF-0402-NPO-±5%-50V
NC/NC/33pF-0402-NPO-±5%-50V
CH1
3V3-STB
RH18
1uF-0402-X5R-±20%-6.3V
82Kohm-0402-±5%-1/16W
IT6633E-P/CX
NC/NC/10Kohm-0402-±5%-1/16W
490ohm-0402-±1%-1/16W
AV2
HHF-14B000-2SA-H
HDMI2-RX2-P
HDMI2-DDC-SDA RH6
HDMI2-DDC-SCL RH7
HDMI2-5VIN
4K7ohm-0402-±5%-1/16W
NC/NC/100ohm-0402-±5%-1/16W
300ohm-0402-±25%
10Kohm-0402-±5%-1/16W
22Kohm-0402-±5%-1/16W
HPD-CON/
LH1
HPD-CON
300ohm-0402-±25%
HDMI-SDA RH27
HDMI-SCL RH26
HDMI-SDA/
HDMI-SCL/
AV3
HHF-14B000-2SA-H
HDMI3-RX2-P
HDMI3-DDC-SDA RH14
HDMI3-DDC-SCL RH15
HDMI3-5VIN
4K7ohm-0402-±5%-1/16W
NC/NC/100ohm-0402-±5%-1/16W
300ohm-0402-±25%
10Kohm-0402-±5%-1/16W
22Kohm-0402-±5%-1/16W
CH10 HPD-CON
0.1uF-0402-Y5V-+80%-20%-16V
CH12 HDMI1-5VIN
0.1uF-0402-Y5V-+80%-20%-16V
CH11 HDMI1-HOTPLUG/
0.1uF-0402-Y5V-+80%-20%-16V
CH13 HDMI2-5VIN
0.1uF-0402-Y5V-+80%-20%-16V
CH14 HDMI2-HOTPLUG/
0.1uF-0402-Y5V-+80%-20%-16V
CH15 HDMI3-5VIN
0.1uF-0402-Y5V-+80%-20%-16V
CH16 HDMI3-HOTPLUG/
0.1uF-0402-Y5V-+80%-20%-16V
CH17 HDMI-SDA
33pF-0402-NPO-±5%-50V
CH18 HDMI-SCL
33pF-0402-NPO-±5%-50V
CH19 CEC1
33pF-0402-NPO-±5%-50V
CH20 CEC1
33pF-0402-NPO-±5%-50V

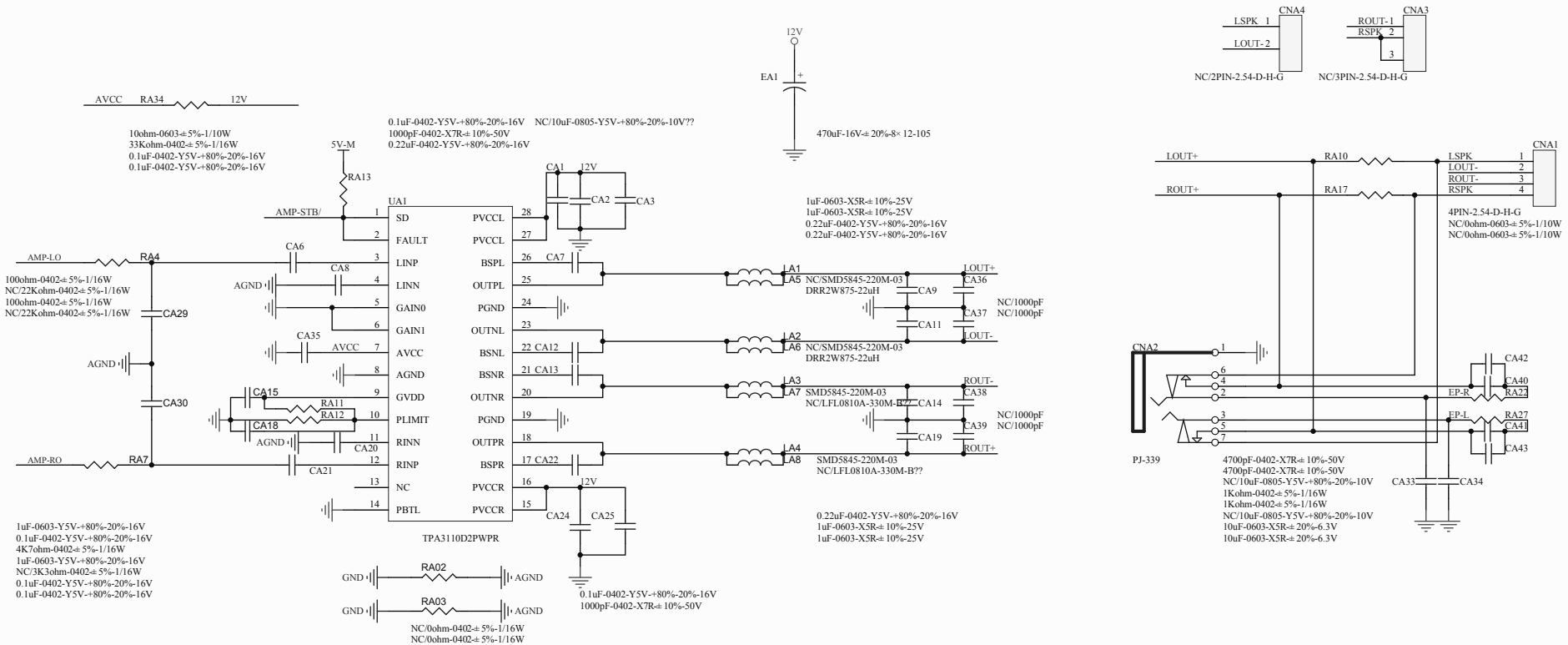
AVCC RA34 12V
10ohm-0603-±5%-1/10W
33Kohm-0402-±5%-1/16W
0.1uF-0402-Y5V-+80%-20%-16V
0.1uF-0402-Y5V-+80%-20%-16V
5V-M
RA13
AMP-STB/
AMP-LO
RA4
100ohm-0402-±5%-1/16W
NC/22Kohm-0402-±5%-1/16W
100ohm-0402-±5%-1/16W
NC/22Kohm-0402-±5%-1/16W
CA29
AGND
CA30
AMP-RO
RA7
CA21
CA6
CA8
CA35
AVCC
CA15
RA11
RA12
CA18
CA20
UA1
SD
FAULT
LINP
LINN
GAIN0
GAIN1
AVCC
AGND
GVDD
PLIMIT
RINN
RINP
NC
PBTL
PVCCL
PVCCL
BSPL
OUTPL
PGND
OUTNL
BSNL
BSNR
OUTNR
PGND
OUTPR
BSPR
PVCCR
PVCCR
TPA3110D2PWPR
0.1uF-0402-Y5V-+80%-20%-16V NC/10uF-0805-Y5V-+80%-20%-10V??
1000pF-0402-X7R-±10%-50V
0.22uF-0402-Y5V-+80%-20%-16V
CA1 12V
CA2
CA3
CA7
CA12
CA13
CA22
12V
CA24
CA25
1uF-0603-Y5V-+80%-20%-16V
0.1uF-0402-Y5V-+80%-20%-16V
4K7ohm-0402-±5%-1/16W
1uF-0603-Y5V-+80%-20%-16V
NC/3K3ohm-0402-±5%-1/16W
0.1uF-0402-Y5V-+80%-20%-16V
0.1uF-0402-Y5V-+80%-20%-16V
GND RA02 AGND
GND RA03 AGND
NC/0ohm-0402-±5%-1/16W
NC/0ohm-0402-±5%-1/16W
0.1uF-0402-Y5V-+80%-20%-16V
1000pF-0402-X7R-±10%-50V
12V
EA1
470uF-16V-±20%-8× 12-105
1uF-0603-X5R-±10%-25V
1uF-0603-X5R-±10%-25V
0.22uF-0402-Y5V-+80%-20%-16V
0.22uF-0402-Y5V-+80%-20%-16V
LA1
LA5 NC/SMD5845-220M-03
DRR2W875-22uH
CA9
CA11
LOUT+
CA36
CA37
LOUT-
NC/1000pF
NC/1000pF
LA2
LA6 NC/SMD5845-220M-03
DRR2W875-22uH
LA3
LA7 SMD5845-220M-03
NC/LFL0810A-330M-B??
CA14
CA19
ROUT-
CA38
CA39
ROUT+
NC/1000pF
NC/1000pF
LA4
LA8 SMD5845-220M-03
NC/LFL0810A-330M-B??
0.22uF-0402-Y5V-+80%-20%-16V
1uF-0603-X5R-±10%-25V
1uF-0603-X5R-±10%-25V
CNA4
LSPK 1
LOUT- 2
NC/2PIN-2.54-D-H-G
CNA3
ROUT- 1
RSPK 2
3
NC/3PIN-2.54-D-H-G
LOUT+
RA10
ROUT+
RA17
CNA1
LSPK 1
LOUT- 2
ROUT- 3
RSPK 4
4PIN-2.54-D-H-G
NC/0ohm-0603-±5%-1/10W
NC/0ohm-0603-±5%-1/10W
CNA2
PJ-339
CA42
CA40
EP-R
RA22
EP-L
RA27
CA41
CA43
4700pF-0402-X7R-±10%-50V
4700pF-0402-X7R-±10%-50V
NC/10uF-0805-Y5V-+80%-20%-10V
1Kohm-0402-±5%-1/16W
1Kohm-0402-±5%-1/16W
NC/10uF-0805-Y5V-+80%-20%-10V
10uF-0603-X5R-±20%-6.3V
10uF-0603-X5R-±20%-6.3V
CA33
CA34

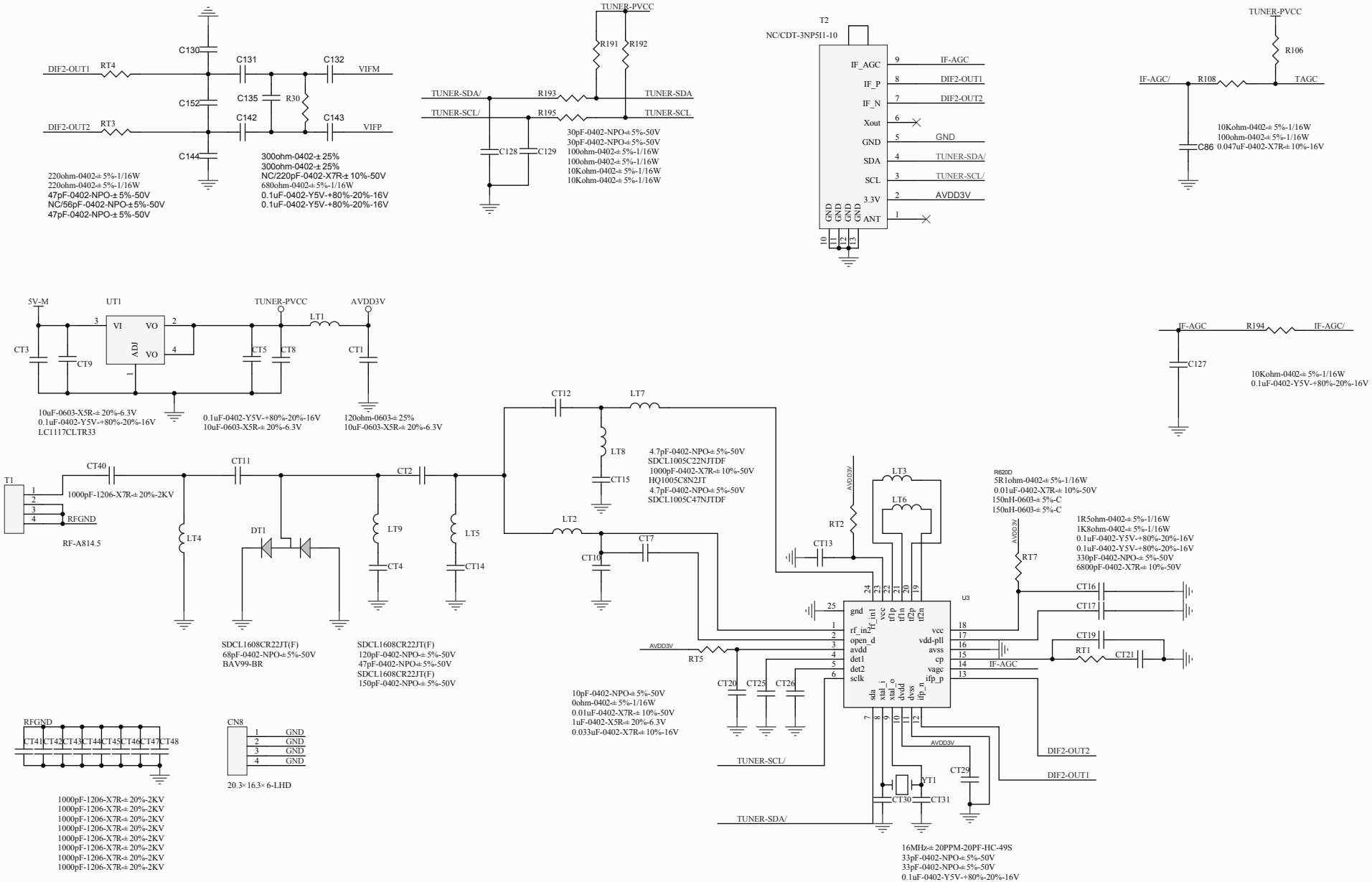
DIF2-OUT1
RT4
C130
C131
C132
VIFM
C152
C135
R30
C142
C143
DIF2-OUT2
RT3
VIFP
C144
220ohm-0402-±5%-1/16W
220ohm-0402-±5%-1/16W
47pF-0402-NPO-±5%-50V
NC/56pF-0402-NPO-±5%-50V
47pF-0402-NPO-±5%-50V
300ohm-0402-±25%
300ohm-0402-±25%
NC/220pF-0402-X7R-±10%-50V
680ohm-0402-±5%-1/16W
0.1uF-0402-Y5V-+80%-20%-16V
0.1uF-0402-Y5V-+80%-20%-16V
TUNER-PVCC
R191
R192
TUNER-SDA/
R193
TUNER-SDA
TUNER-SCL/
R195
TUNER-SCL
C128
C129
30pF-0402-NPO-±5%-50V
30pF-0402-NPO-±5%-50V
100ohm-0402-±5%-1/16W
100ohm-0402-±5%-1/16W
10Kohm-0402-±5%-1/16W
10Kohm-0402-±5%-1/16W
T2
NC/CDT-3NP5I1-10
IF_AGC
IF_P
IF_N
Xout
GND
SDA
SCL
3.3V
ANT
IF-AGC
DIF2-OUT1
DIF2-OUT2
GND
TUNER-SDA/
TUNER-SCL/
AVDD3V
TUNER-PVCC
R106
IF-AGC/
R108
TAGC
C86
10Kohm-0402-±5%-1/16W
100ohm-0402-±5%-1/16W
0.047uF-0402-X7R-±10%-16V
5V-M
UT1
VI
VO
ADJ
VO
TUNER-PVCC
AVDD3V
LT1
CT3
CT9
CT5
CT8
CT1
10uF-0603-X5R-±20%-6.3V
0.1uF-0402-Y5V-+80%-20%-16V
LC1117CLTR33
0.1uF-0402-Y5V-+80%-20%-16V
10uF-0603-X5R-±20%-6.3V
120ohm-0603-±25%
10uF-0603-X5R-±20%-6.3V
IF-AGC
R194
IF-AGC/
C127
10Kohm-0402-±5%-1/16W
0.1uF-0402-Y5V-+80%-20%-16V
CT12
LT7
LT8
CT15
4.7pF-0402-NPO-±5%-50V
SDCL1005C22NJTDF
1000pF-0402-X7R-±10%-50V
HQ1005C8N2JT
4.7pF-0402-NPO-±5%-50V
SDCL1005C47NJTDF
T1
CT40
CT11
CT2
1000pF-1206-X7R-±20%-2KV
RFGND
RF-A814.5
LT4
DT1
LT9
CT4
LT5
CT14
LT2
CT10
CT7
SDCL1608CR22JT(F)
68pF-0402-NPO-±5%-50V
BAV99-BR
SDCL1608CR22JT(F)
120pF-0402-NPO-±5%-50V
47pF-0402-NPO-±5%-50V
SDCL1608CR22JT(F)
150pF-0402-NPO-±5%-50V
AVDD3V
RT2
CT13
LT3
LT6
R620D
5R1ohm-0402-±5%-1/16W
0.01uF-0402-X7R-±10%-50V
150nH-0603-±5%-C
150nH-0603-±5%-C
AVDD3V
RT7
1R5ohm-0402-±5%-1/16W
1K8ohm-0402-±5%-1/16W
0.1uF-0402-Y5V-+80%-20%-16V
0.1uF-0402-Y5V-+80%-20%-16V
330pF-0402-NPO-±5%-50V
6800pF-0402-X7R-±10%-50V
U3
gnd
rf_in1
rf_in2
open_d
avdd
det1
det2
sclk
vcc
rf1p
rf1n
rf2p
rf2n
vcc
vdd-pll
avss
cp
vagc
ifp_p
ifp_n
sda
xtal_i
xtal_o
avdd
dvss
CT16
CT17
CT19
RT1
CT21
IF-AGC
AVDD3V
RT5
CT20
CT25
CT26
10pF-0402-NPO-±5%-50V
0ohm-0402-±5%-1/16W
0.01uF-0402-X7R-±10%-50V
1uF-0402-X5R-±20%-6.3V
0.033uF-0402-X7R-±10%-16V
TUNER-SCL/
TUNER-SDA/
AVDD3V
CT29
YT1
CT30
CT31
DIF2-OUT2
DIF2-OUT1
16MHz-±20PPM-20PF-HC-49S
33pF-0402-NPO-±5%-50V
33pF-0402-NPO-±5%-50V
0.1uF-0402-Y5V-+80%-20%-16V
RFGND
CT41
CT42
CT43
CT44
CT45
CT46
CT47
CT48
1000pF-1206-X7R-±20%-2KV
1000pF-1206-X7R-±20%-2KV
1000pF-1206-X7R-±20%-2KV
1000pF-1206-X7R-±20%-2KV
1000pF-1206-X7R-±20%-2KV
1000pF-1206-X7R-±20%-2KV
1000pF-1206-X7R-±20%-2KV
1000pF-1206-X7R-±20%-2KV
CN8
GND
GND
GND
GND
20.3×16.3×6-LHD

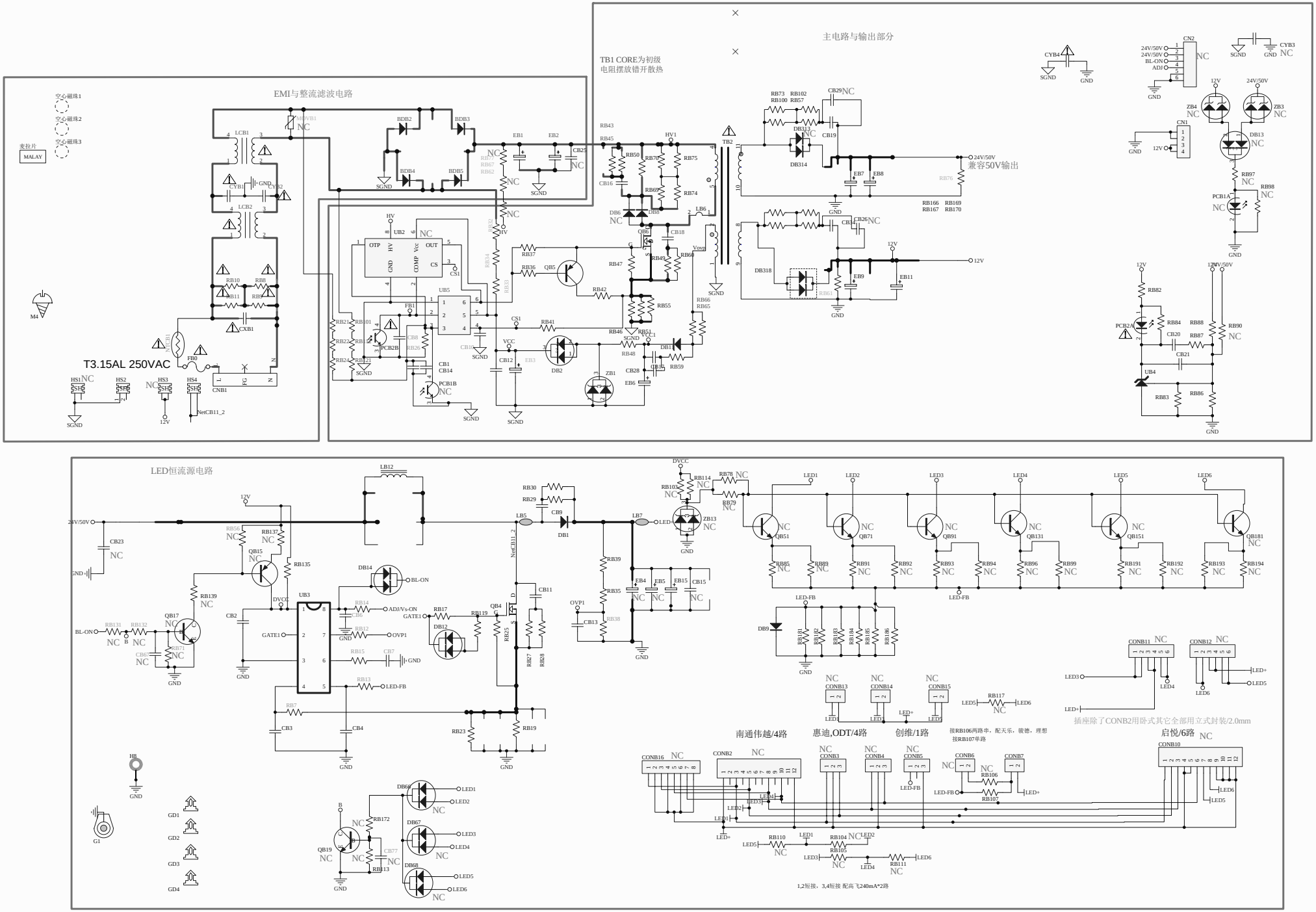


| Title | | |
|---|---|---|
| Size A2 | Number | Revision |
| Date: 2013/1/10 | | Sheet of |
| File: C:\Users\小广东海信安规原理图32寸.Sch | | Drawn By: |

| 更改版本 | 更改内容 | 更改人 | 更改日期 |
|---|---|---|---|
| V1.1 | | | |
| V1.2 | | | |
| V1.3 | | | |
| V1.4 | | | |
| V1.5 | | | |

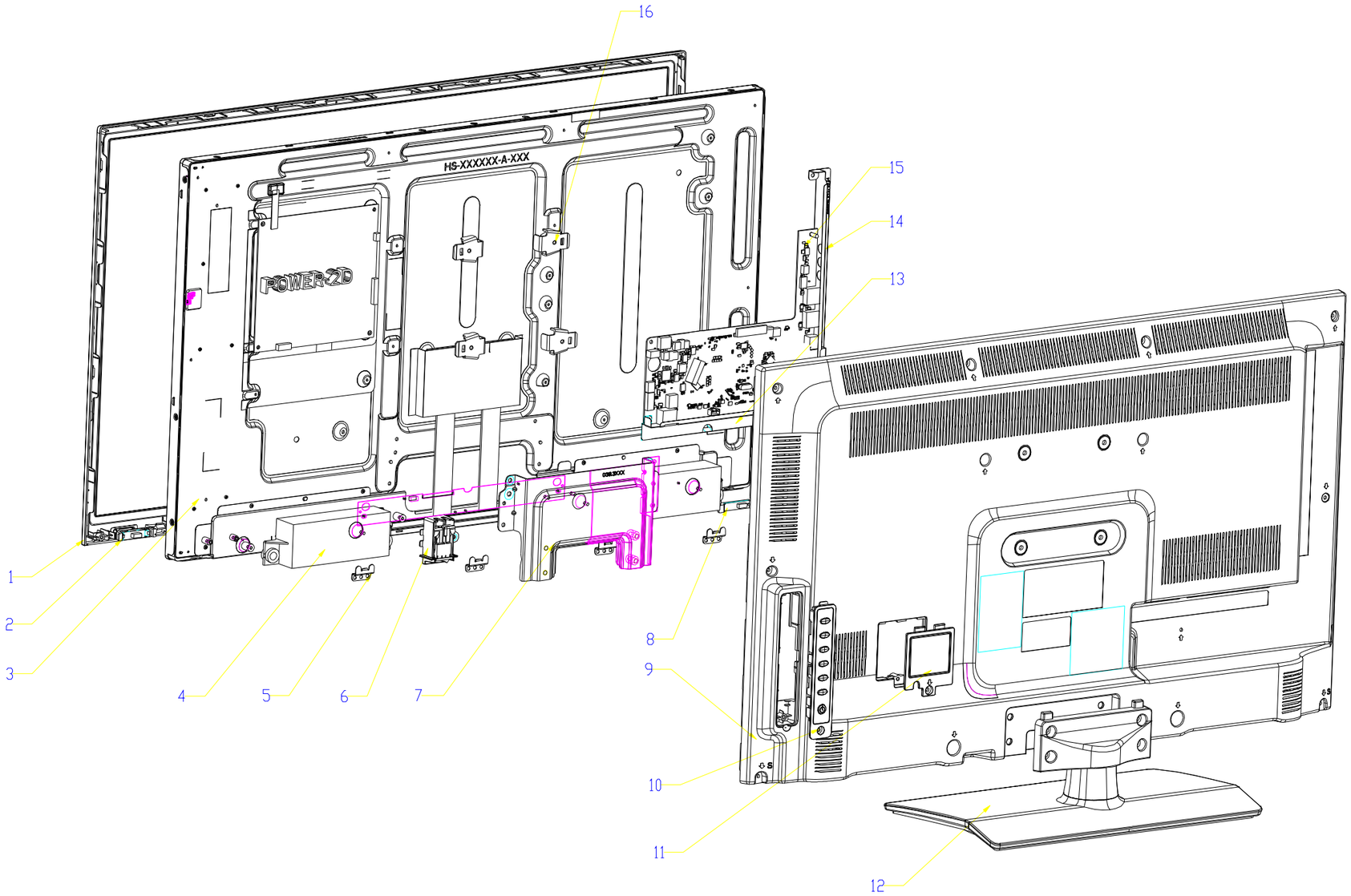


| 序号 | 名称 | 数量 | 材料/代号 | 备注 |
|---|---|---|---|---|
| 16 | 支架 | 4 | Wall hanging bracket | |
| 15 | 主板 | 1 | main board | |
| 14 | 侧端子板 | 1 | side terminal bracket | |
| 13 | 下端子板 | 1 | below terminal bracket | |
| 12 | 底座 | 1 | The base | |
| 11 | 电源线盖板 | 1 | The power cord cover plate | |
| 10 | 按键 | 1 | key | |
| 9 | 后壳 | 1 | back cover | |
| 8 | 导光柱 | 1 | lens | |
| 7 | 底座连接支架 | 1 | The base bracket | |
| 6 | 开关支架 | 1 | switch bracket | |
| 5 | 压屏支架 | 4 | Pressure screen bracket | |
| 4 | 音箱 | 2 | speaker | |
| 3 | 液晶屏 | 1 | panel | |
| 2 | 遥控导光柱 | 1 | IR lens | |
| 1 | 前壳 | 1 | front cover | |

# 总装图

LED32A300J

未注公差标准 单位：mm

| 更改标记 | 数量 | 更改单号 | 签名 | 日期 |
|---|---|---|---|---|

设计
审核
工艺
标准化
批准

阶段标记 | 质量 | 比例

第 页 共 页

青岛海信电器股份有限公司

日底图总号
底图总号
签名

格式(1) 幅面 A2

# 爆炸图

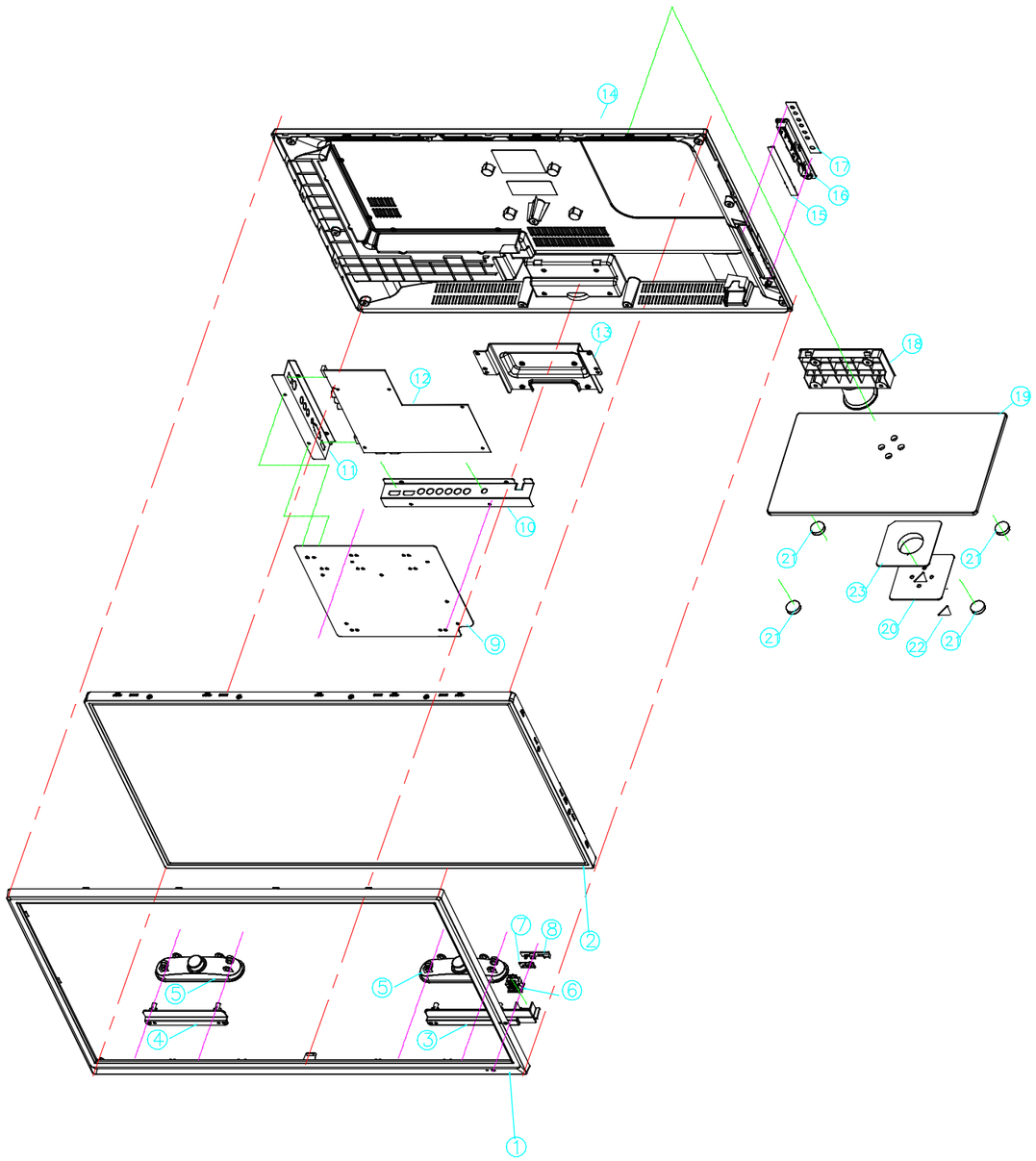


| 序号 | 物料名称 | 物料编号 | 用量 | 备注 |
|---|---|---|---|---|
| 23 | PVC垫 | pvc pad | 1 | |
| 22 | 橡胶垫B | rubber pad B | 1 | |
| 21 | 橡胶垫A | rubber pad A | 4 | |
| 20 | 底座固定片 | metal pad | 1 | |
| 19 | 玻璃底座 | base plate | 1 | |
| 18 | 立柱座 | base neck | 1 | |
| 17 | 7键按键PVC | key pvc | 1 | |
| 16 | 7键按键 | key bracket | 1 | |
| 15 | 7按键PCB板 | key board | 1 | |
| 11 | 后壳 | back cover | 1 | |
| 13 | 立柱连接片 | the base bracket | 1 | |
| 12 | 主板 | main board | 1 | |
| 11 | 侧出端子板 | side terminal bracket | 1 | |
| 10 | 下出端子板 | below terminal bracket | 1 | |
| 9 | 主板支架 | main board bracket | 1 | |
| 8 | 遥控接收PCB板 | remote board | 1 | |
| 7 | 导光镜 | IR lens | 1 | |
| 6 | 船形开关 | power switch | 1 | |
| 5 | 喇叭 | speaker | 2 | |
| 4 | 喇叭支架右 | right speaker bracket | 1 | |
| 3 | 喇叭支架左 | left speaker bracket | 1 | |
| 2 | LED29屏 | panel | 1 | |
| 1 | 前壳 | front cover | 1 | |

| | | | | | | | | | | | |
|---|---|---|---|---|---|---|---|---|---|---|---|
| 产品型号 | LEDN29W20 | 材质： / | | 第三视角 | 绘图 | 审核 | 核准 | A5 | | | |
| 产品名称 | LEDN29W20不带DVD玻璃底座 | 表面处理：/ | | 单位： mm | | | | A4 | | | |
| 订单号 | | 版本：A1 | 比例：/ | 模号： / | | | | A3 | | | |
| | | | | | | | | A2 | | | |
| | | | | | | | | A1 | | | |
| | | | 页码：1/1 | 日期： 2013-1-11 | | | | 版本 | 日期： | 变更内容 | 确认 |