LCD Television

Service Manual

Chassis： MSD6308

Product: LHD32K260AM

Ver 1.0

Hisense Electric Co.，Ltd.

June 9 , 2015

Contents

Contents ..... - 2 -
Service Manual ..... - 4 -
1. Precautions and notices ..... - 4 -
1.1 Warning ..... - 5 -
1.2 Notes ..... - 8 -
2. Product Specifications ..... - 11 -
2.1 Main board layout ..... - 11 -
2.2 TV Front and TV Rear ..... - 13 -
2.3 Spec. ..... - 15 -
2.4 TV main Parts ..... - 16 -
3. Factory/Service OSD Menu and Adjustment ..... - 16 -
3.1 How to enter the Factory OSD Menu ..... - 16 -
3.2 Factory OSD Menu ..... - 16 -
4. Software updating ..... - 19 -
4.1 Updating main board with SecureCRT ..... - 19 -
4.2 Write Mboot software to nand flash ..... - 22 -
4.3 Upgrading with the USB disk ..... - 25 -
5.Troubleshooting ..... - 27 -
6. Circuit instruction ..... - 33 -
Board signal process and power tree ..... - 33 -
7. Schematic circuit diagram ..... - 35 -
8. Explode View ..... - 35 -

REVISION HISTROY				
Version	Page	Section	Description	Date
ver1.0	ALL	ALL	First iss ued	2015-06-09

Service Manual

1. Precautions and notices

BEFORE SERVICING THE LCD TV, READ THE SAFETY PRECAUTIONS IN THIS MANUAL.

WHEN REPLACEMENT PARTS ARE REQUIRED, BE SURE TO USE REPLACEMENT PARTS SPECIFIED BY THE MANUFACTURER.

Proper service and repair is important to the safe, reliable operation of all Hisense Electric Co., Ltd Equipment. The service procedures recommended by Hisense and described in this Service Guide are effective methods of performing service operations. Some of service

operations require the use of tools specially designed for the purpose. The special tools should be used when and as recommended.

It is important to note that this manual contains various CAUTIONS and NOTICES which should be carefully read in order to minimize the risk of personal injury to service personnel. The possibility exists that improper service methods may damage the equipment. It is also important to understand that these CAUTIONS and NOTICES ARE NOT EXHAUSTIVE. Hisense could not possibly know, evaluate and advise the service trade of all conceivable ways in which service might be done or of the possible hazardous consequences of each way. Consequently, Hisense has not

undertaken any such broad evaluation. Accordingly, a serviceman that uses a service procedure or tools, which are not recommended by Hisense, must first satisfy himself thoroughly that neither his safety nor the safe of the equipment
will be jeopardized by the service method selected.
Hereafter throughout this manual, Hisense Electric Co., Ltd will be referred to as Hisense.

1.1 Warning

1.1.1

Critical components having special safety characteristics are identified with a ⚠ by the Ref. No. in the parts list. Use of substitute replacement parts, which do not have the same specified safety characteristics, may create shock, fire, or other hazards. Under no circumstances should the original design be modified or altered without written permission from Hisense. Hisense assumes no liability, express or implied, arising out of any unauthorized modification of design. Serviceman assumes all liability.

DANGER CAUTION

TO ENSURE THE CONTINUED RELIABILITY OF THIS PRODUCT, USE ONLY ORIGINAL MANUFACTURER'S REPLACEMENT PARTS, WHICH ARE LISTED WITH THEIR PART NUMBERS IN THE PARTS LIST SECTION OF THIS SERVICE GUIDE.

1.1.2.

All ICs and many other semiconductors are susceptible to electrostatic discharges (ESD). Careless handling during repair can reduce life drastically. When repairing, make sure that you are connected with the same potential as the mass of the set by a wristband with resistance. Keep components and tools also at this same potential.

1. Never replace modules or other components while the unit is switched on.

2. When making settings, use plastic rather than metal tools. This will prevent any short circuits and the danger of a circuit becoming unstable.

1.1.3

To prevent electrical shock, do not use thi s polarized ac plug with an extension cord, receptacle, or the outlet unless the blades can be fully inserted to prevent blade exposure.

To prevent electrical shock, match wide blade or plug to wide slot, fully insert.

1.1.4

When replacement parts are required, be sure to use replacement parts specified by the manufacturer or have the same characteristics as the original part. Unauthorized substitutions may result in fire, electric shock, or other hazards.

1.1.5

Safety regulations require that after a repair the set must be returned in its original condition. In particular attention should be paid to the following points.

-Note: The wire trees should be routed correctly and fixed with the mounted cable clamps.

-The insulation of the mains lead should be checked for external damage.

1.1.6

(1) Do not touch Signal and Power Connector while this product operates. Do not touch EMI ground part and Heat Sink of Film Filter.

(2) Do not supply a voltage higher than that specified to this product. This may damage the product and may cause a fire.

(3) Do not use this product in locations where the humidity is extremely high, where it may be splashed with water, or where flammable materials surround it. Do not install or use the product in a location that does no satisfy the specified environmental conditions. This may damage the product and may cause a fire.

(4) If a foreign substance (such as water, metal, or liquid) gets inside the panel module, immediately turn off the power. Continuing to use the product may cause fire or electric shock.

(5) If the product emits smoke, and abnormal smell, or makes an abnormal sound, immediately turn off the power. Continuing to use the product, it may cause fire or electric shock.

(6) Do not disconnect or connect the connector while power to the product is on. It takes some time for the voltage to drop to a sufficiently low level after the power has been turned off. Confirm that the voltage has dropped to a safe level before disconnecting or connecting the connector.

(7) Do not pull out or insert the power cable from/to an outlet with wet hands. It may

cause electric shock.

(8) Do not damage or modify the power cable. It may cause fire or electric shock.

(9) If the power cable is damaged, or if the connector is loose, do not use the product: otherwise, this can lead to fire or electric shock.

(10) If the power connector or the connector of the power cable becomes dirty or dusty, wipe it with a dry cloth. Otherwise, this can lead to fire.

(11) Use only with the cart, stand, tripod, bracket, or table specified by the manufacturer, or sold with the apparatus. When a cart is used, use caution when moving the cart/apparatus combination to avoid injury from tip-over.

1.2 Notes

Notes on Safe Handling of the LCD panel and during service

The work procedures shown with the Note indication are important for ensuring the safety of the product and the servicing work. Be sure to follow these instructions.

• Before starting the work, secure a sufficient working space.

• At all times other than when adjusting and checking the product, be sure to turn OFF the POWER Button and disconnect the power cable from the power source of the TV during servicing.

• To prevent electric shock and breakage of PC board, start the servicing work at least 30 seconds after the main power has been turned off. Especially when installing and removing the power board, start servicing at least 2 minutes after the main power has

been turned off.

• While the main power is on, do not touch any parts or circuits other than the ones specified. If any connection other than the one specified is made between the measuring equipment and the high voltage power supply block, it can result in electric shock or activation of the leakage-detection circuit breaker.

• When installing the LCD module in, and removing it from the packing carton, be sure to have at least two persons perform the work.

• When the surface of the panel comes into contact with the cushioning materials, be sure to confirm that there is no foreign matter on top of the cushioning materials before the surface of the panel comes into contact with the cushioning materials. Failure to observe this precaution may result in, the surface of the panel being scratched by foreign matter.

• When handling the circuit board, be sure to remove static electricity from your body before handling the circuit board.

• Be sure to handle the circuit board by holding the large parts as the heat sink or transformer. Failure to observe this precaution may result in the occurrence of an abnormality in the soldered areas.

• Do not stack the circuit boards. Failure to observe this precaution may result in problems resulting from scratches on the parts, the deformation of parts, and short-circuits due to residual electric charge.

• Routing of the wires and fixing them in position must be done in accordance with the

original routing and fixing configuration when servicing is completed. All the wires are routed far away from the areas that become hot (such as the heat sink). These wires are fixed in position with the wire clamps so that the wires do not move, thereby ensuring that they are not damaged and their materials do not deteriorate over long periods of time. Therefore, route the cables and fix the cables to the original position and states using the wire clamps.

• Perform a safety check when servicing is completed. Verify that the peripherals of the serviced points have not undergone any deterioration during servicing. Also verify that the screws, parts and cables removed for servicing purposes have all been returned to their proper locations in accordance with the original setup.

The lightning flash with arrowhead symbol, within an equilateral triangle is intended to alert the user to the presence of uninsulated dangerous voltage within the products enclosure that may be of sufficient magnitude to constitute a risk of electric shock.

The exclamation point within an equilateral triangle is intended to alert the user to the presence of important operating and maintenance (servicing) instructions in the literature accompanying the set.

2. Product Specifications

2.1 Main board layout

2.1.1 1Main board: 6012

Take LHD32K260AM（6168）for example.

Top:

Side terminals:

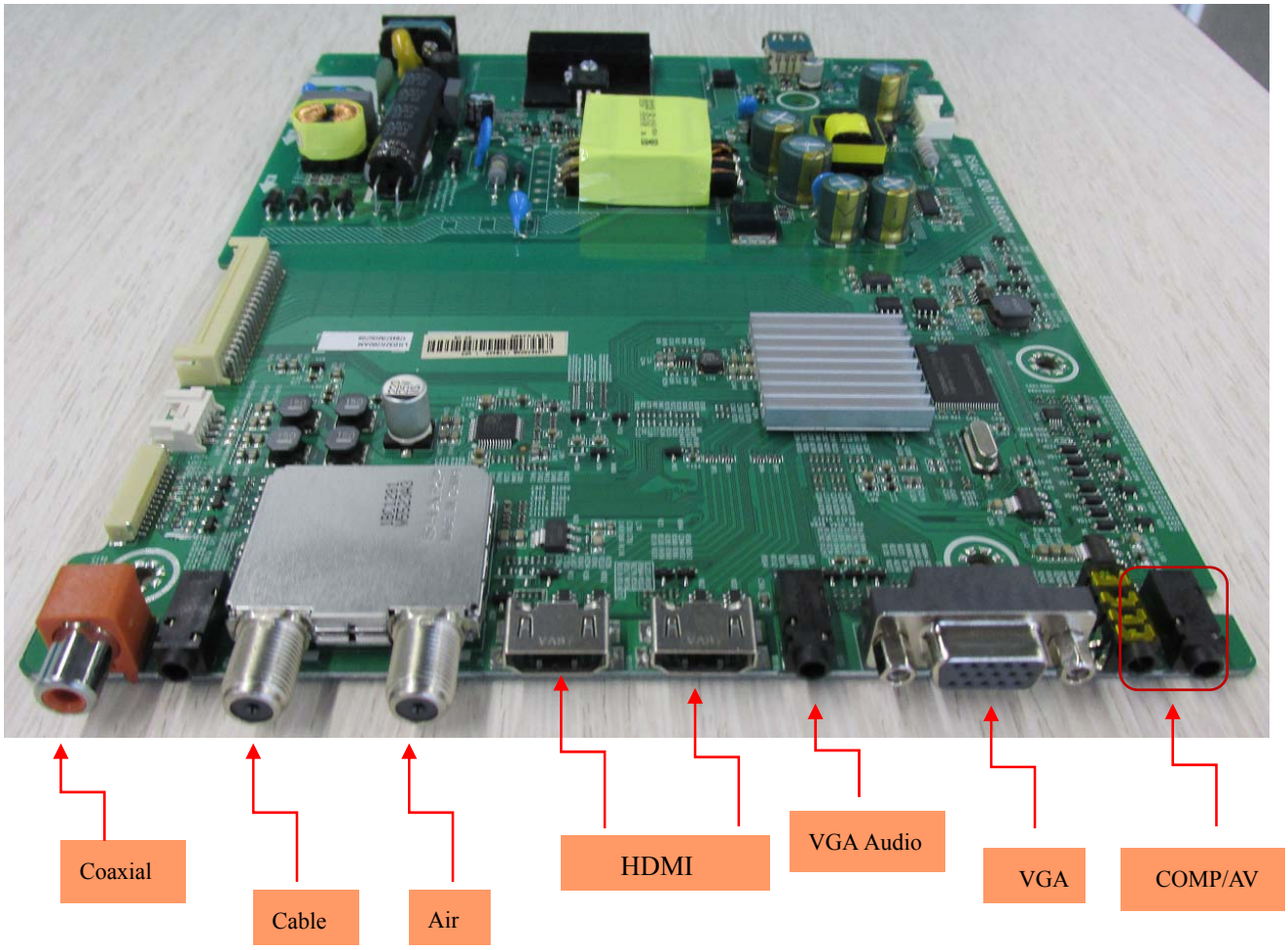

Side terminals:

2.2 TV Front and TV Rear

LHD32K260AM TV Front:

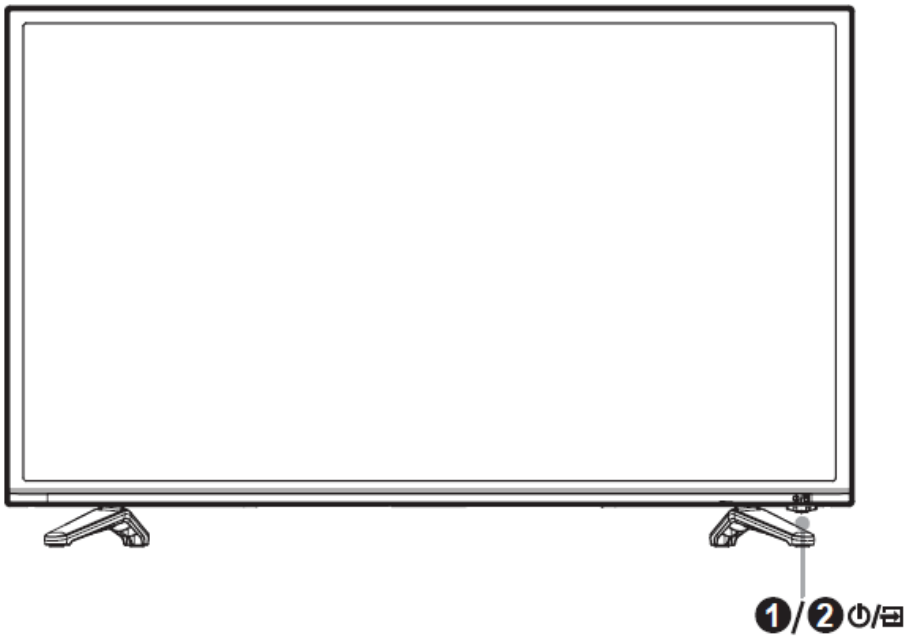

Item		Description
1	Remote sensor	Receives remote signals from the remote control. Do not put anything near the sensor, as its function may be affected.
2	STANDBY⏻/SOURCE	In power off mode, press to turn on the TV. In power on mode, press to select among the different sources, press for a few seconds to turn off the TV.

NOTES

- FOR ILLUSTRATION ONLY.
- Powering up or down the TV requires several seconds of processing time. Do not rapidly turn the TV on/off as abnormal operation may occur.

LHD32K260AM TV Rear

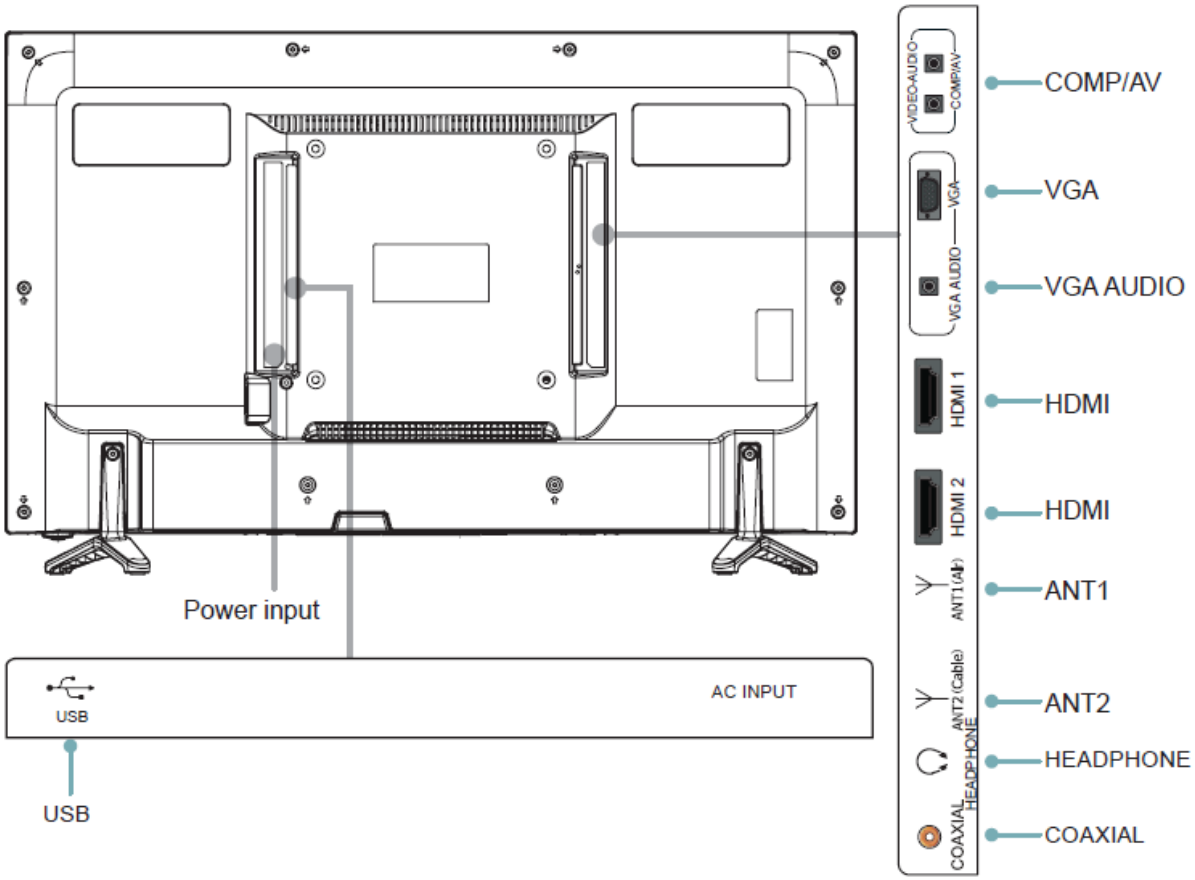

NOTE

- Connect to AV, please use the red, blue, green HD adapter cable, and the green connector corresponds to VIDEO.

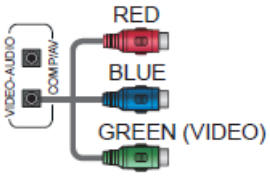

2.3 Spec.

LHD32K260AM

Model Name		LHD32K260AM
Dimension (mm)	Without Stand	738 × 435 × 89
	With Stand	738 × 470 × 171
Weight(kg)	Without Stand	4.6
	With Stand	4.8
LCD Panel Minimum size (diagonal)		32 inches (80 cm)
Screen resolution		1366 x 768
Audio power		6W + 6 W
Power consumption		50 W
Power supply		AC 100-240 V, 50/60 Hz
Receiving systems	RF	PAL-M/N, NTSC, ISDB-T
	AV	PAL, NTSC
Environmental conditions		Temperature: 5°C~ 45°C Humidity: 20%-80% RH Atmospheric pressure: 86 kPa - 106 kPa
Component Input		480 I / 60 Hz, 480 P / 60 Hz, 720 P / 60 Hz, 1080 I / 60 Hz, 1080 P / 60 Hz
VGA Input		VGA (640×480 / 60 Hz), SVGA (800×600 / 60 Hz), XGA (1024×768 / 60 Hz)
HDMI Input		RGB / 60 Hz (640×480, 800×600, 1024×768) YUV / 60 Hz (480 I, 480 P, 720 P, 1080 I, 1080 P)

2.4 TV main Parts

TV	Panel Mode	LVDS(Main-Panel)	Main board &Power board	Chassis
LHD32K260AM	HD315DH-F13	HX2-2×20KLB90P\90.0\无\ROH	RSAG2.908.6168\ROH	MSD6308RT-A1G

3. Factory/Service OSD Menu and Adjustment

3.1 How to enter the Factory OSD Menu

With user's RC

Power on the TV.
1. Press "Menu" button and call up User OSD Menu.
2. Select " Sound" -> "Balance" item.
3. Press number key 1->9->6 ->9 in sequence when "Balance" item is focused.
   Note: If necessary, re-do number keys.
4. Factory OSD appears.

Note: Press "exit" key on the RC, which can exit factory OSD menu.

3.2 Factory OSD Menu

The Factory OSD Menu comprises Factory Menu and Design menu.

3.2.1、Factory Menu

White balance:

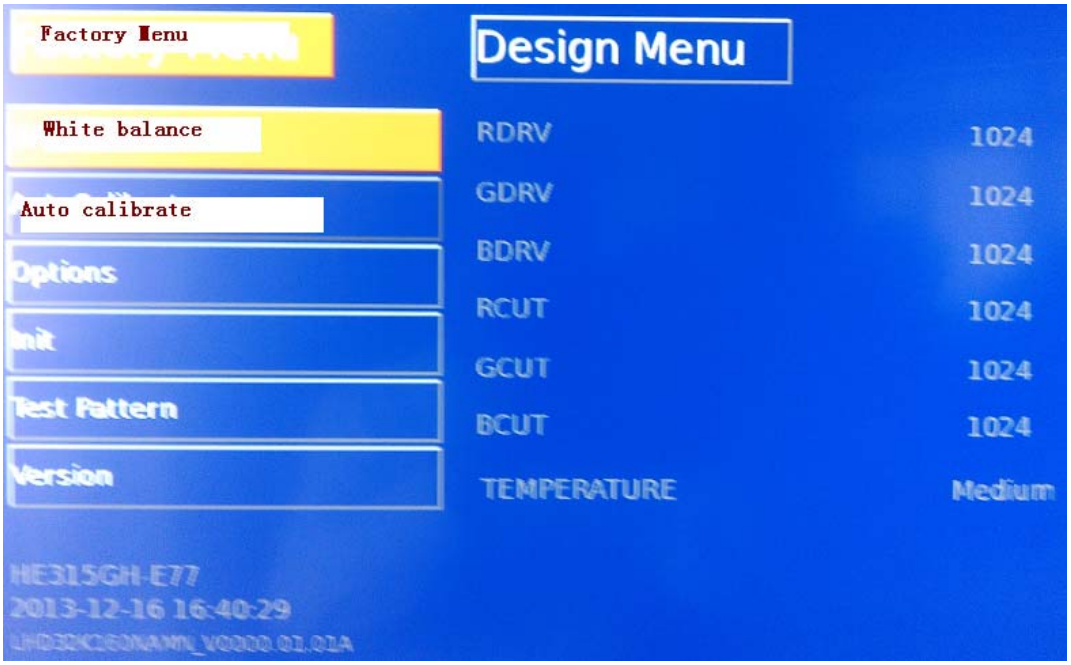
Factory Menu
White balance
Auto calibrate
Options
Init
Test Pattern
Version
Design Menu
RDRV 1024
GDRV 1024
BDRV 1024
RCUT 1024
GCUT 1024
BCUT 1024
TEMPERATURE Medium
HE315GH-E77
2013-12-16 16:40:29

Option:

Factory Menu
WhiteBalance
AutoCalibrat
Options
Init
Test Pattern
Version
HE315GH-E77
2013-12-16 16:40:29
LHD32K160NAMN_V0000.01.01A
Design Menu
TOFAC M
Logo HISENSE
Language English
Power Mode Memory
Set MAC ADDR
PVR_RecordAll Off
HDCP IN
Uart Enable Off
WDT On
Software Update (USB) Hello World

Init:

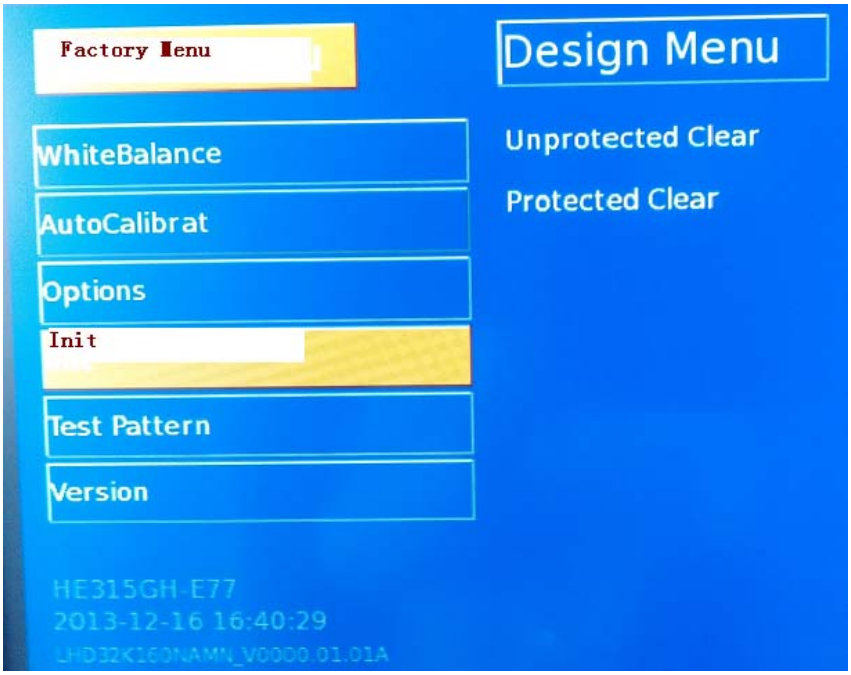

Version:

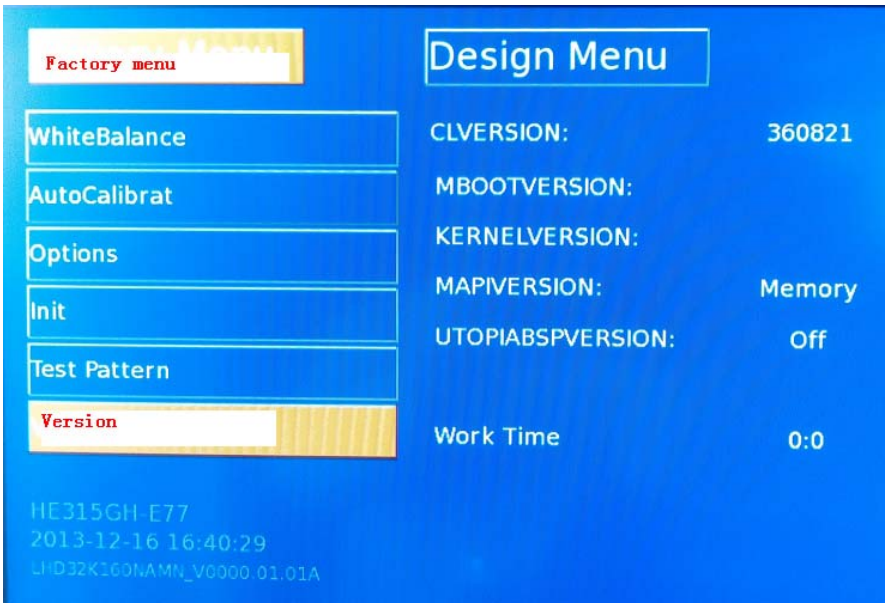

3.2.2、Design Menu

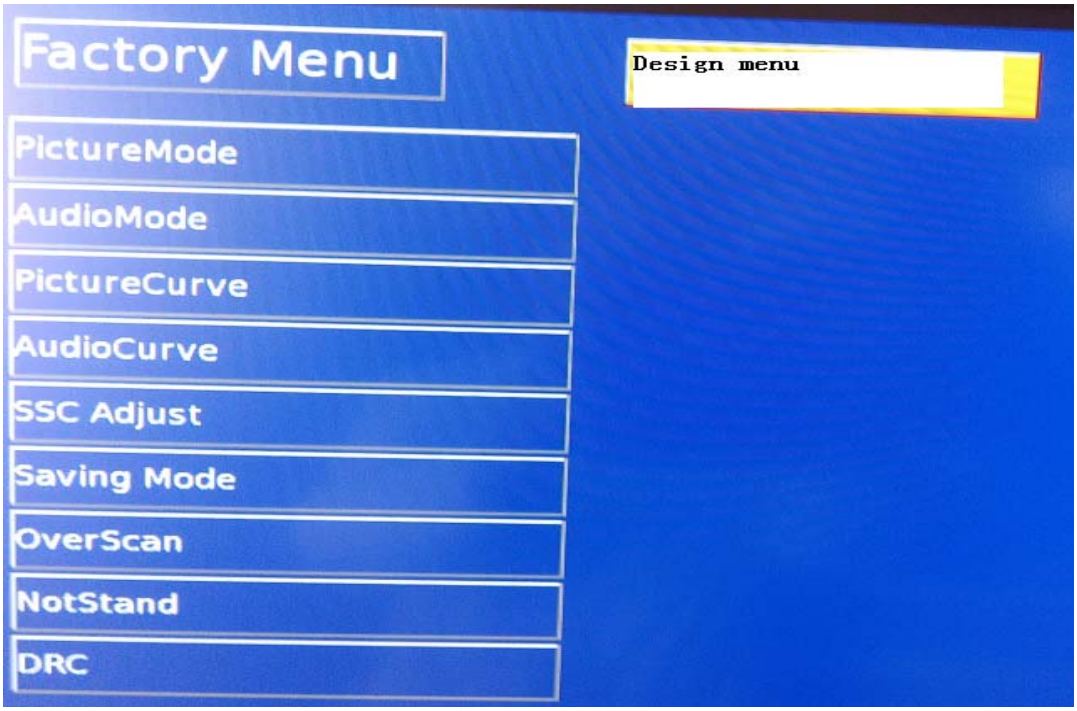

Note：

The above “Factory/Service OSD Menus” are reference only, please refer to the actual unit to determine the appearances.

4. Software updating

Software updating includes Mboot write and main software update. Usually first write Mboot to nand flashWith (MSTV_Tool.exe) then can update main software With SecureCRT.

4.1 Updating main board with SecureCRT

4.1.1 Hardware connecting

You can update the software through a special tool (as following)
Connect the Debug board to the TV use the RS232 (4 pin), the other USB port to the PC.

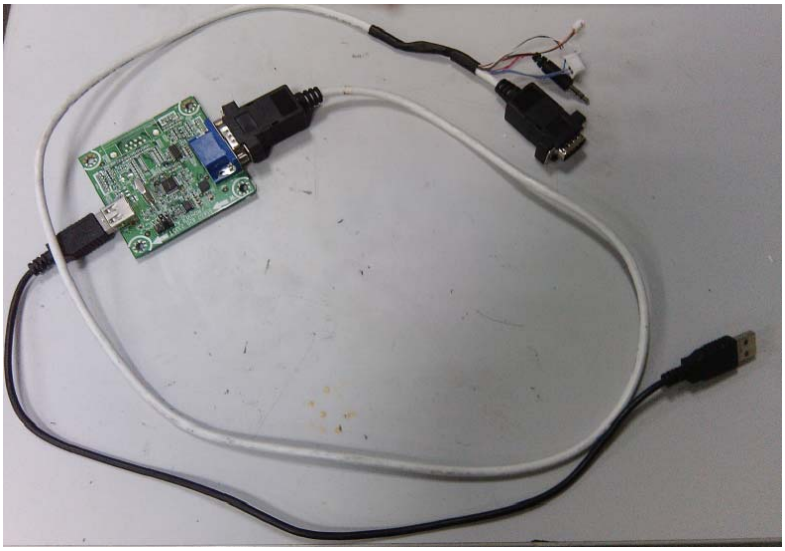

For mstar chassis,the bebug boad set as following.

For MTK chassis,the bebug boad set as following.

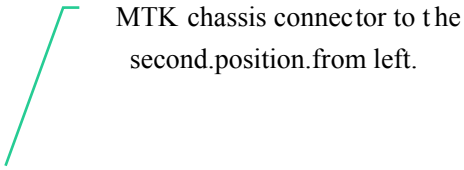

4.1.2

First use Mstar bebug Tools,and you have to install drive software for bebug board.
If your PC is Windows XP system:
1、First install FTCUNIN.EXE of FTC100103(MSTAR) rar file in your PC.
This is a drive software of Mstar

Another:
If your PC is Win7 system, you will have to install CDM20802_Setup_WIN7 rar file，and then open the software of SecureCRT in your PC.

Notice:

Chassis MSD6308RT-A1G belong to Mstar

4.1.2 How to update main board with SecureCRT

. For the board which could capture logs, we can use serial command to upgrade the

USBUpgrade.bin.

Please follow these steps:

a) Copy the USBUpgrade.bin to the root directory of an USB disk. Insert the USB disk to the board.

b) Connect the board with your PC via the debug tool. Open the software of SecureCRT in your PC.

c) AC power on the board while pressing the Enter key of your PC.

d) Check that there is a “nugget#” in the SecureCRT window.

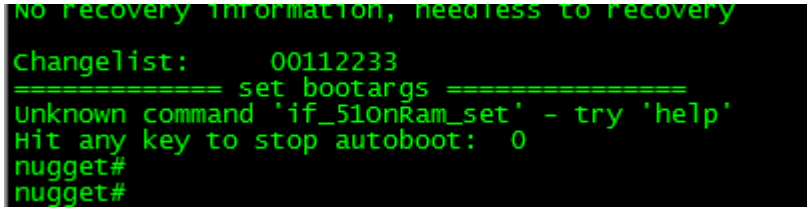

e) Input “usb start 1” and press Enter key.

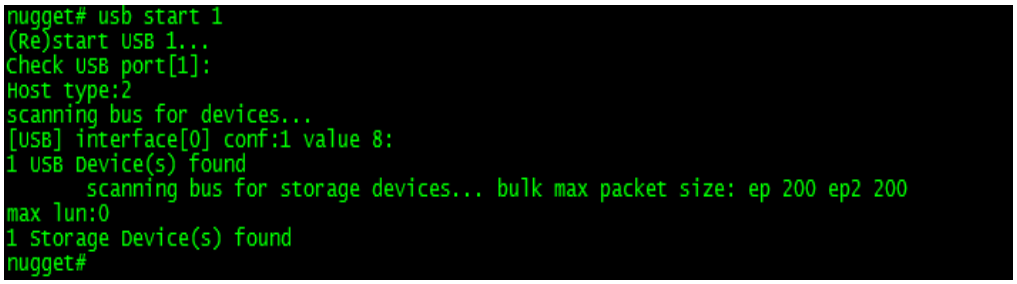

Note: If it says “Error” like below picture, please input “usb start 0” and press Enter key.

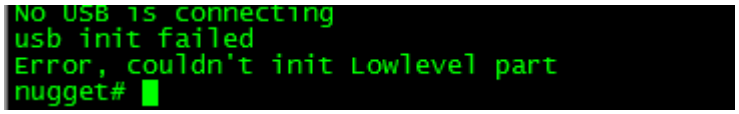

f) Input “ustar” and press Enter key.

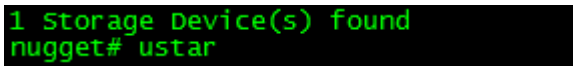

g) It will be upgraded automatically and restart.

4.2 Write Mboot software to nand flash

1. For the board which only says “Uart bus off”, we should write the Mboot file firstly and then upgrade the USBUpgrade.bin with serial command following section 1.
   For the Mboot file please follow these steps:

a) Connect the board with your PC via the debug tool. Open the MSTV_Tool in your PC.

b) Set I2C parameters.
Click I2C-> Set I2C to open the window of below and adjust the I2C Speed to 30.

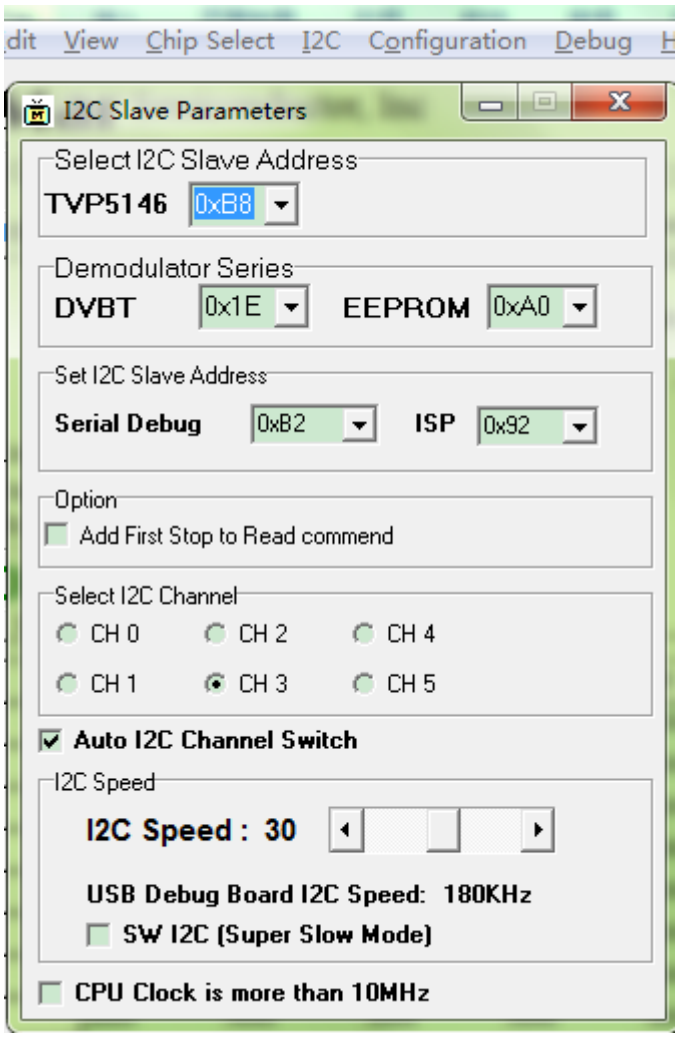

c) Load the Mboot files.
Click View->Eagle/Nugget NAND Program to open the window below.

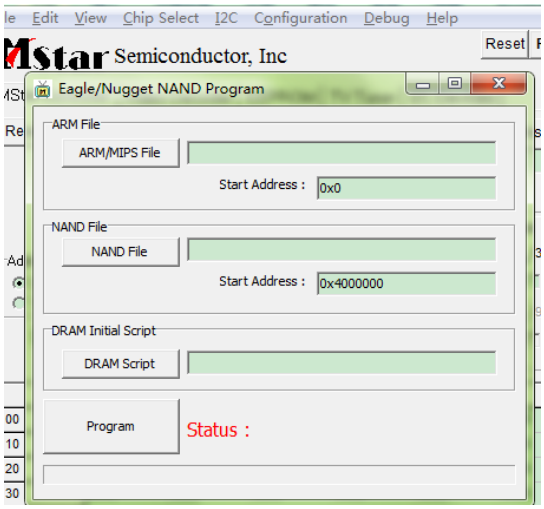

Load the 3 files to the window as below.

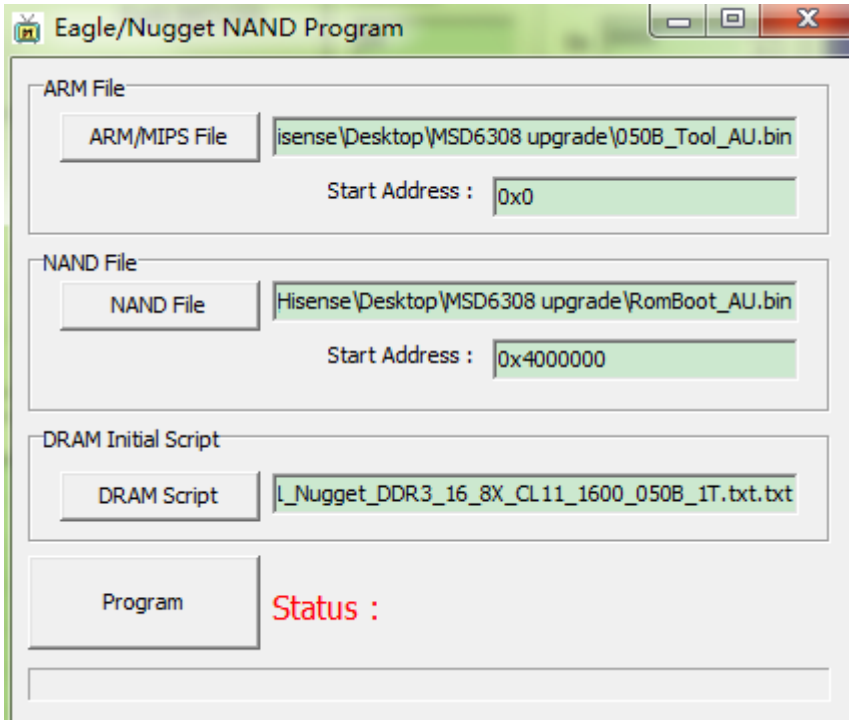

d) Click Program button above and it will write Mboot files to the Nand flash.

e) When you see the Status become to "Status: Success, Please reset power", please wait for 2 minutes and then close the MSTV_Tool.

f) AC power off the board.

Now you c an upgrade the USBUpgrade.bin file with serial command following the steps in section 1.

4.3 Upgrading with the USB disk

4.3.1 TV in normal state

1. Copy the “**USBUpgrade.bin**” file that MBoot and main software named to the root directory of two USB disks respectively.
2. Insert the USB disk into the USB slot of the TV SET.
3. Press “Menu” button of remote control and call up Factory OSD Menu, choose " OPTION "->”Software Update(USB)” item.

Detail see 3.1 ***How to enter the Factory OSD Menu***

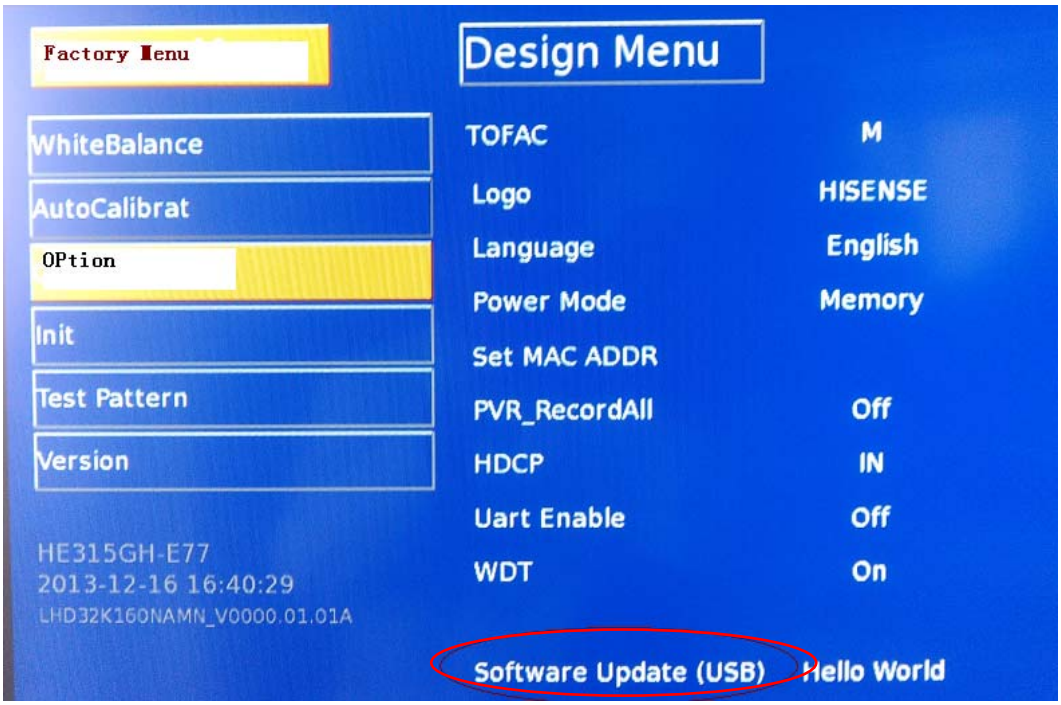

4. Press the key on RC, it will show a confirm message box, **Are you sure?**

Press button to select “yes” in the confirm message box, then **TV will** automatic update.

5. Then it will update the software automatically, Please don’t power off during the updating process.

6. After update succeeds, TV SET will restart automatically.
7. First update the Boot software, second update the main software. In order to convenience, prepare two USB disks to save different software respectively.

5.Troubleshooting

5.1 Troubleshooting for Remote Control

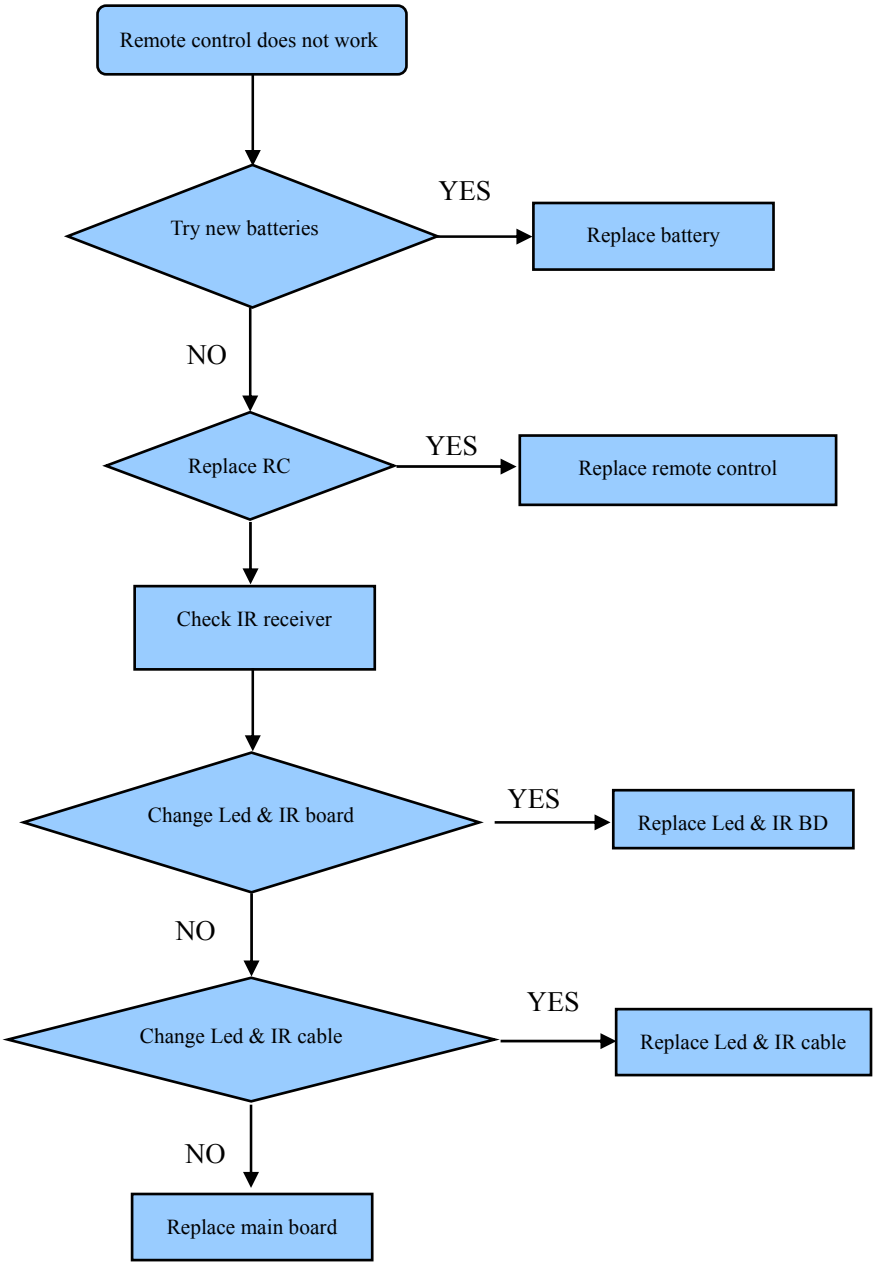

5.2 Troubleshooting for Function Key

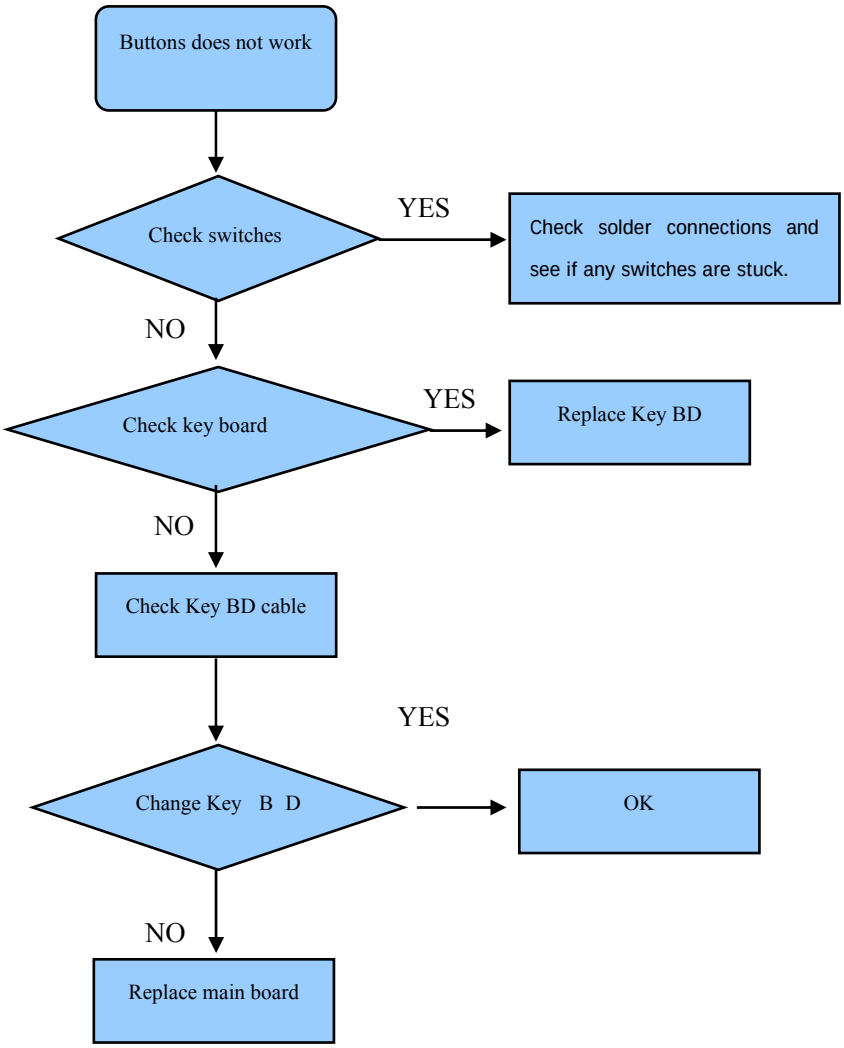

5.3 TV won’t Power On

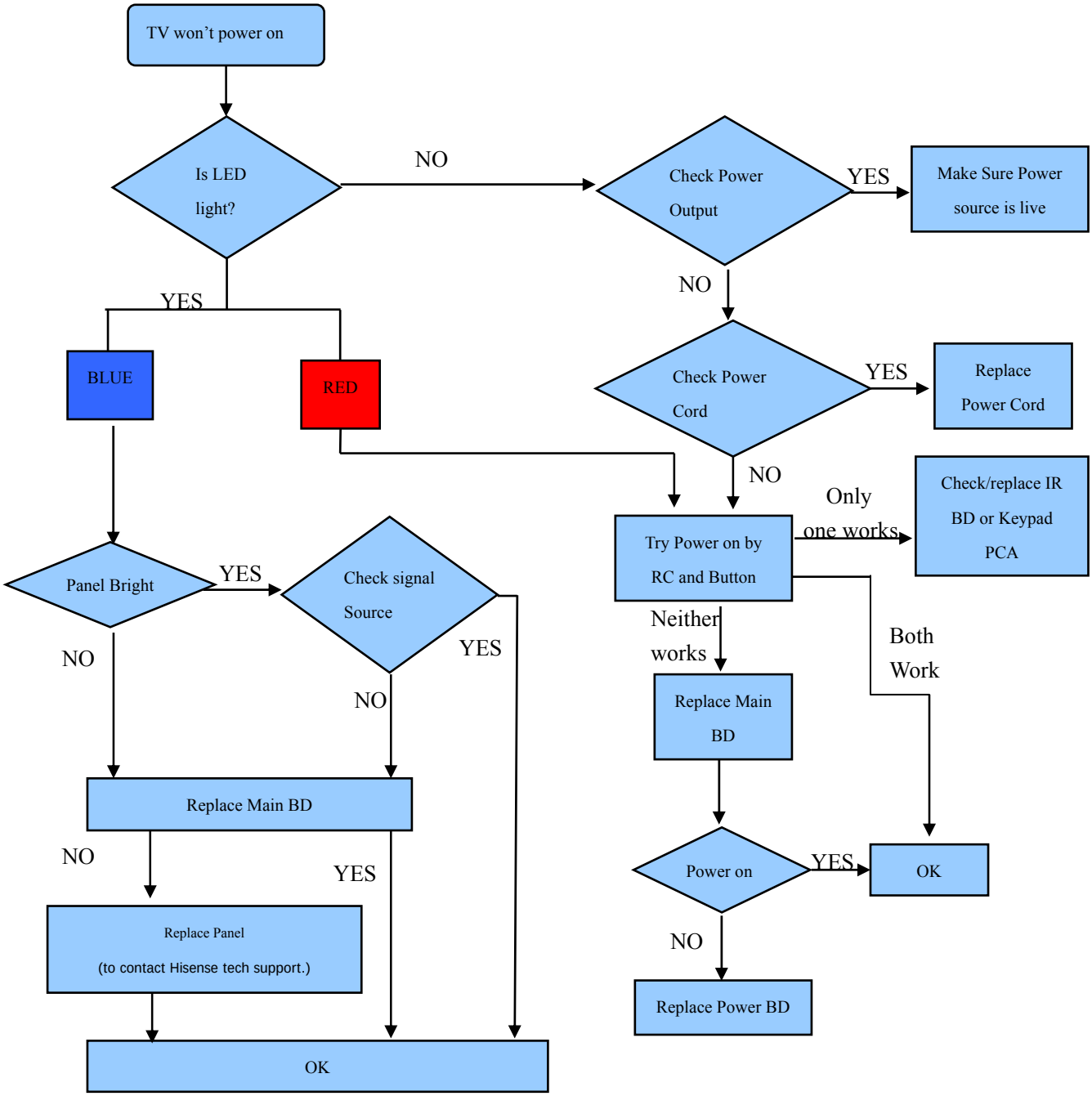

5.4 Troubleshooting for Audio

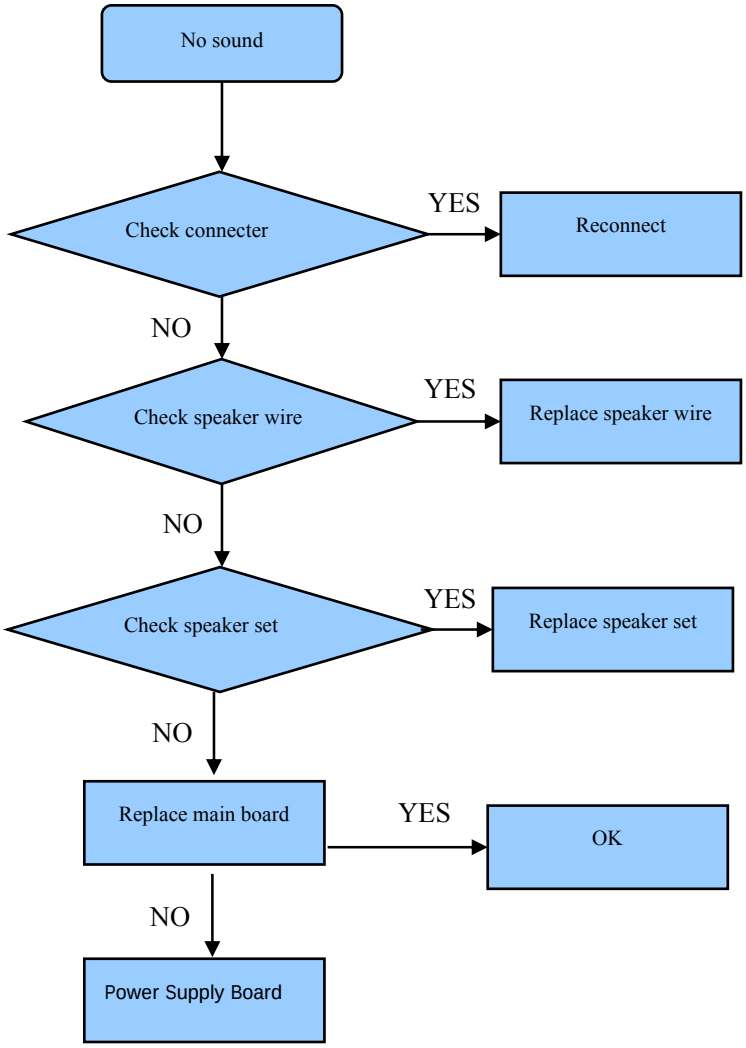

5.5 Troubleshooting for TV/VGA/HDMI input

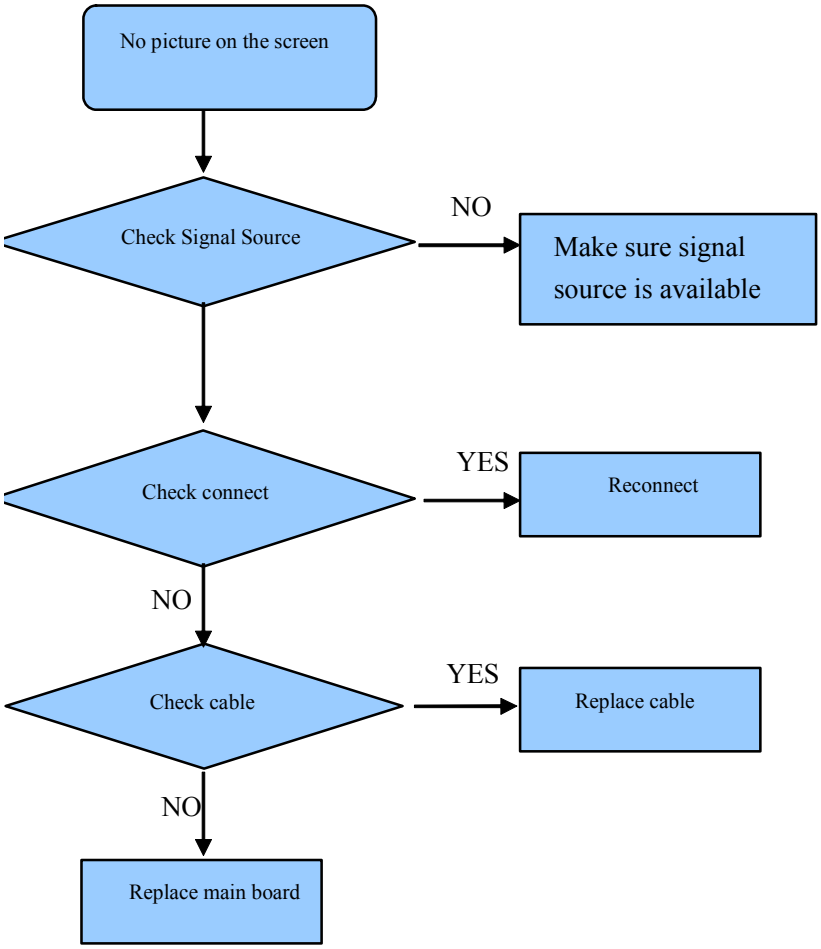

5.6 Troubleshooting for YPbPr input

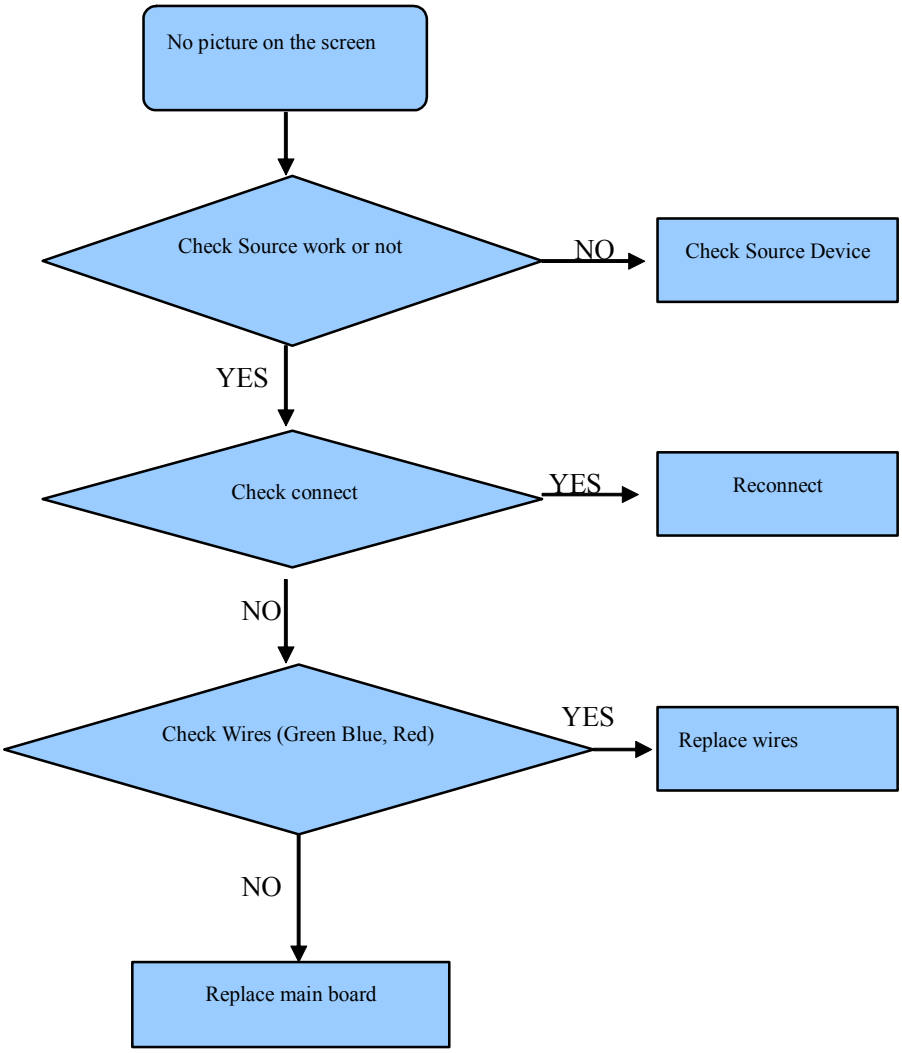

5.7 Troubleshooting for Video input

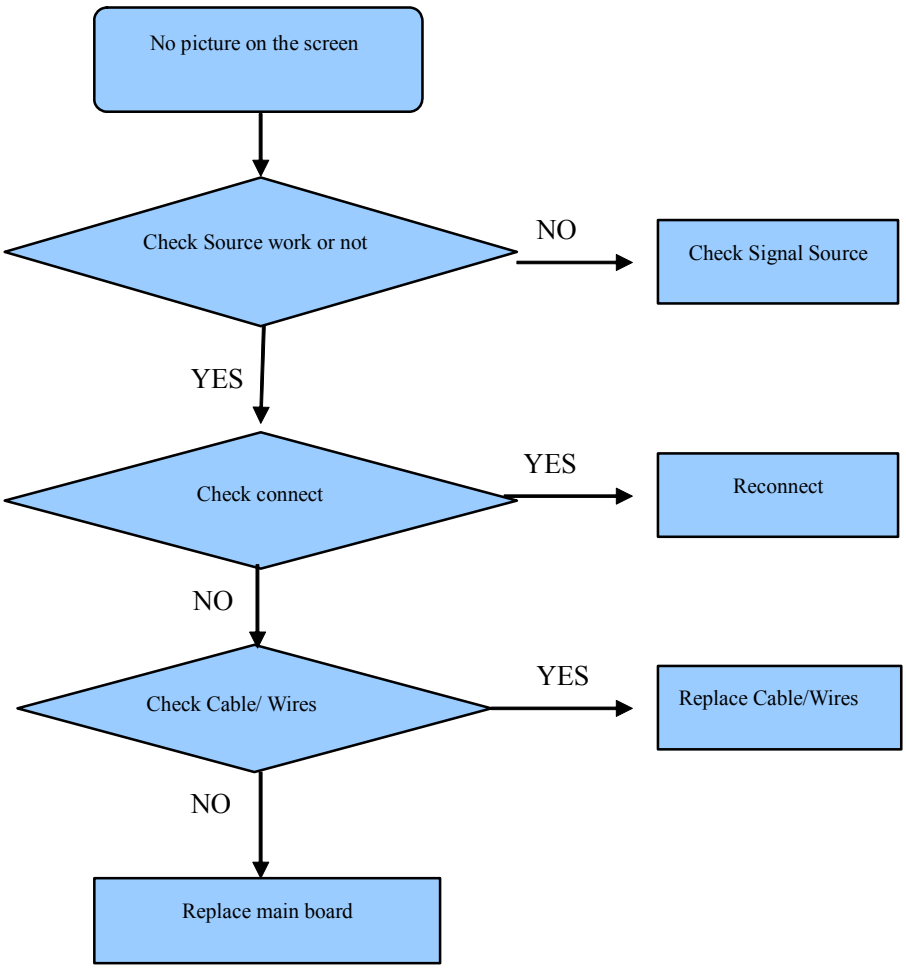

6. Circuit instruction

Board signal process and power tree

7. Schematic circuit diagram

8. Explode View

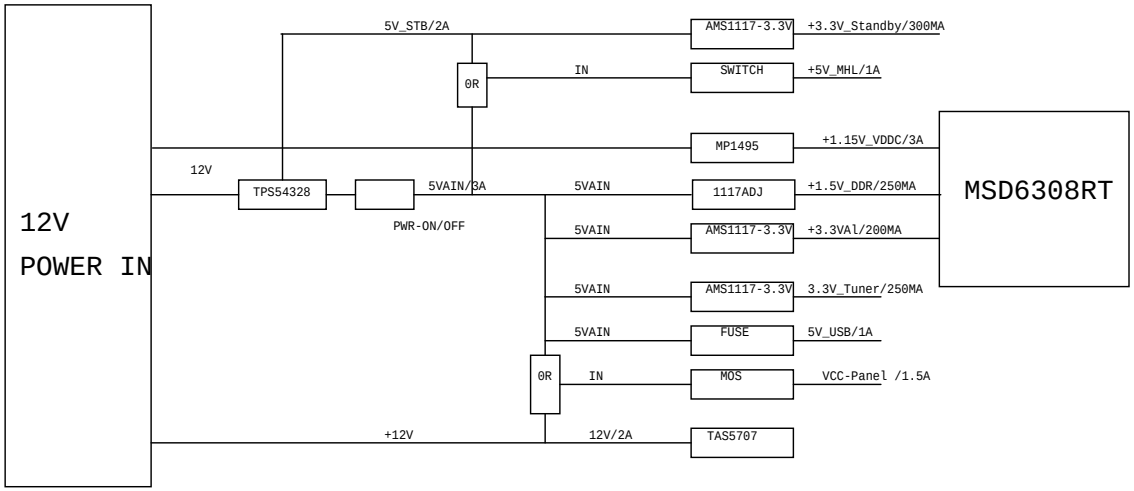
12V
POWER IN
5V_STB/2A
AMS1117-3.3V
+3.3V_Standby/300MA
0R
IN
SWITCH
+5V_MHL/1A
MP1495
+1.15V_VDDC/3A
12V
TPS54328
5VAIN/3A
PWR-ON/OFF
5VAIN
1117ADJ
+1.5V_DDR/250MA
MSD6308RT
5VAIN
AMS1117-3.3V
+3.3VAl/200MA
5VAIN
AMS1117-3.3V
3.3V_Tuner/250MA
5VAIN
FUSE
5V_USB/1A
0R
IN
MOS
VCC-Panel /1.5A
+12V
12V/2A
TAS5707

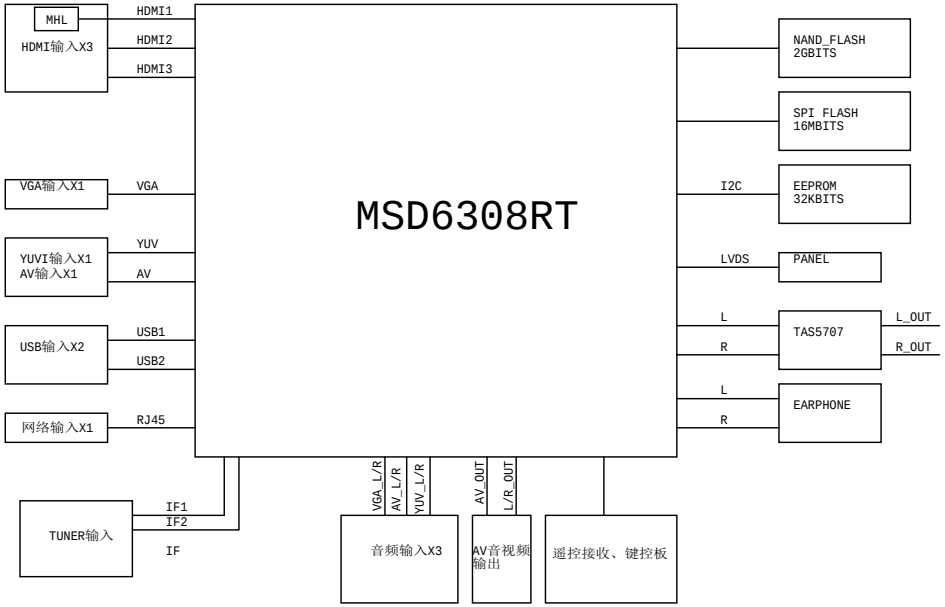
MHL
HDMI输入X3
HDMI1
HDMI2
HDMI3
VGA输入X1
VGA
YUVI输入X1
AV输入X1
YUV
AV
USB输入X2
USB1
USB2
网络输入X1
RJ45
MSD6308RT
NAND_FLASH
2GBITS
SPI FLASH
16MBITS
I2C
EEPROM
32KBITS
LVDS
PANEL
L
R
TAS5707
L_OUT
R_OUT
L
R
EARPHONE
TUNER输入
IF1
IF2
IF
VGA_L/R
AV_L/R
YUV_L/R
音频输入X3
AV_OUT
L/R_OUT
AV音视频输出
遥控接收、键控板

Power Input

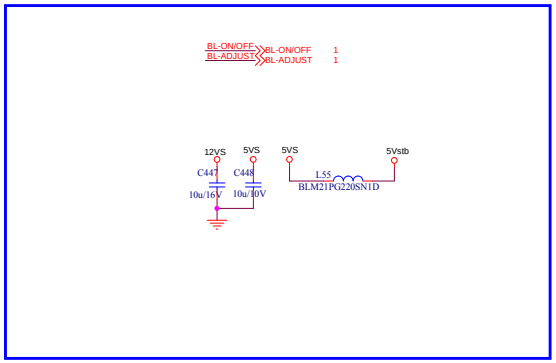

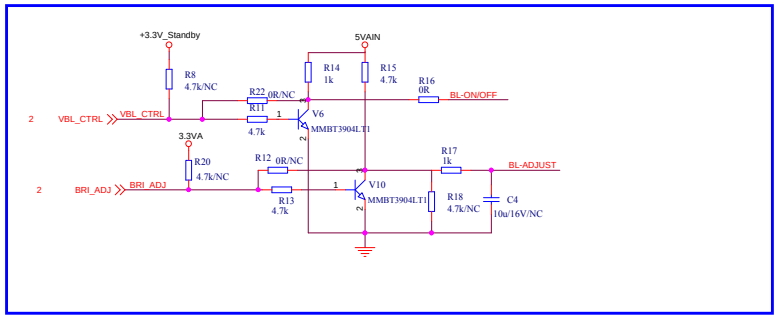

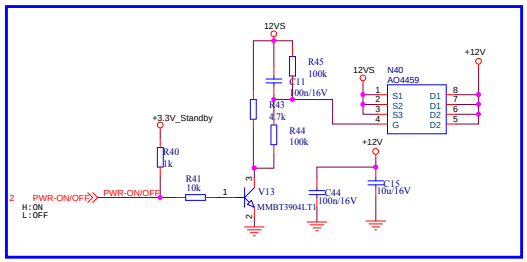

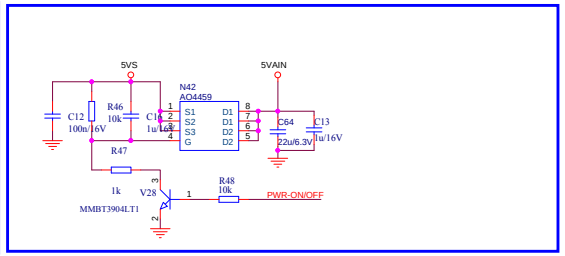

5V Power-12V/5V

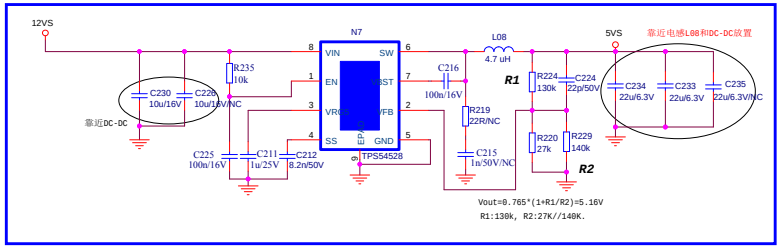

Core Power 1.15V-MP1495(3A)

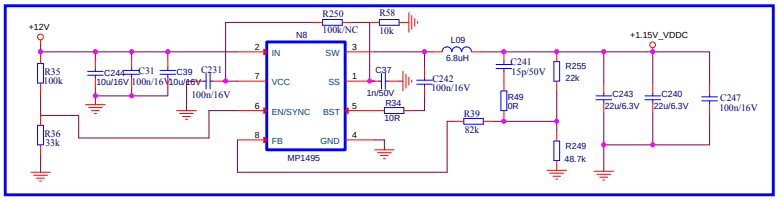

3.3V Standby Power

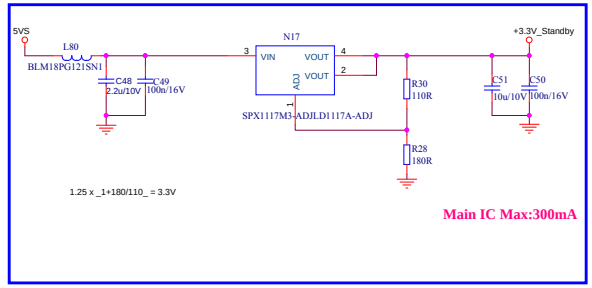

3.3V Normal Power

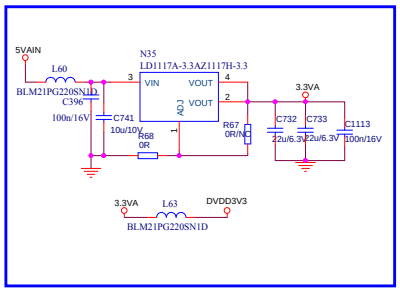

Power for Panel

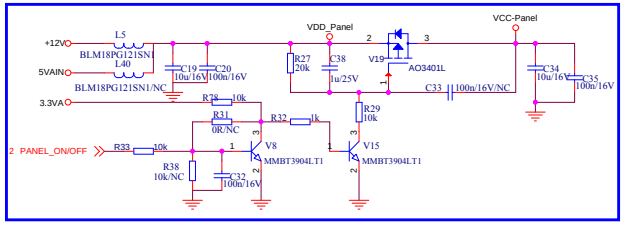

1.5V Normal Power for DDR3

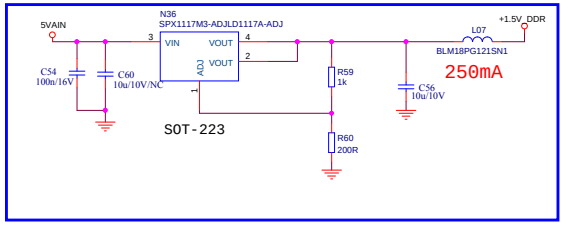

Hisense Electric Co.,Ltd.
No.11,Jianguo Road,Qingdao,China
WWW.HISENSE.COM

Title: Hisense MSD6308RT

Size: Schematic Name <Doc>

Rev: 1.0

Date: Monday, June 01, 2015

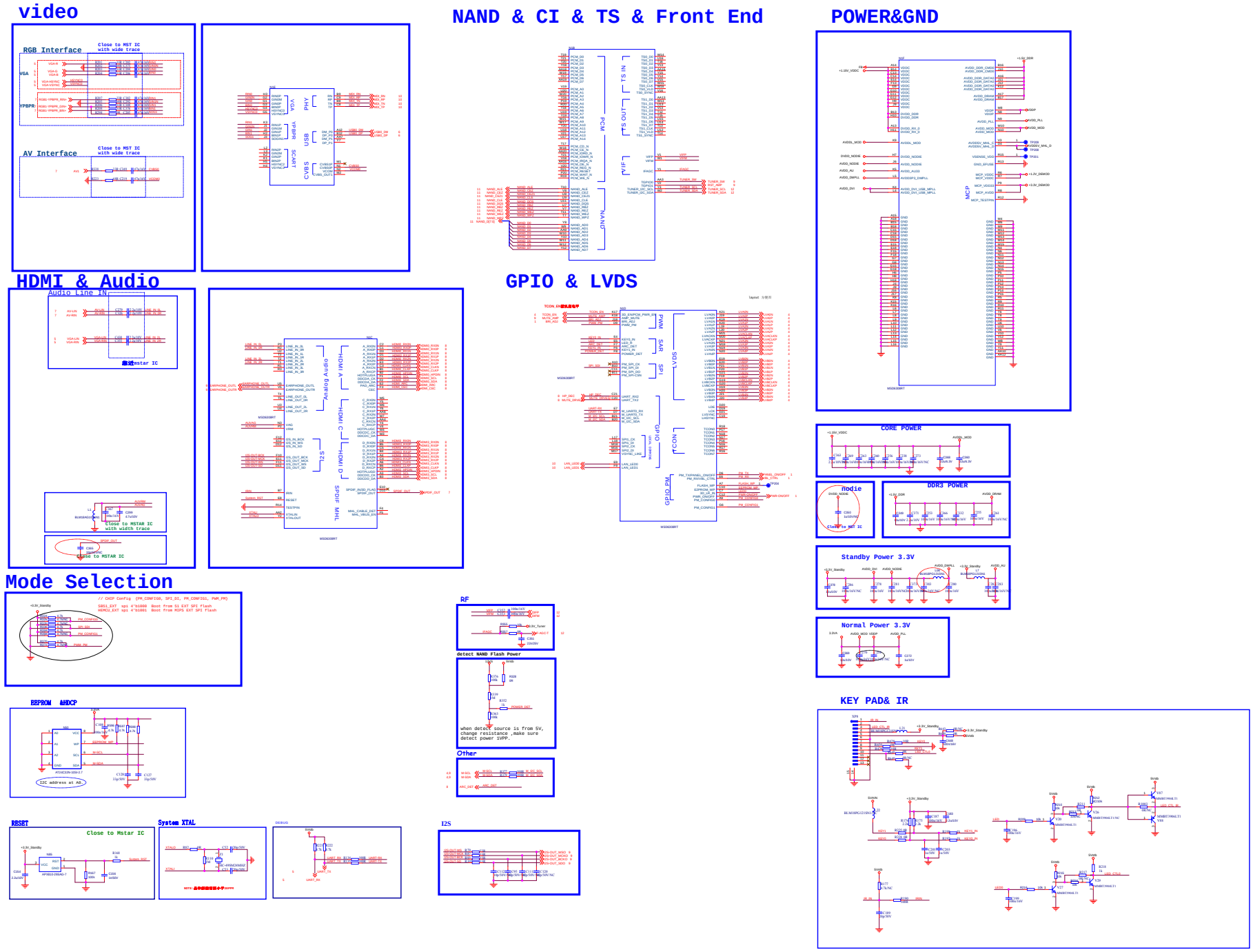
video
RGB Interface
Close to MST IC with wide trace
AV Interface
Close to MST IC with wide trace
NAND & CI & TS & Front End
POWER&GND
HDMI & Audio
Audio Line IN
Close to MSTAR IC with width trace
Close to MSTAR IC
GPIO & LVDS
CORE POWER
Rodie
DDR3 POWER
Standby Power 3.3V
Normal Power 3.3V
Mode Selection
RF
detect NAND Flash Power
when detect source is from 5V, change resistance ,make sure detect power 1VPP.
Other
EEPROM &HDCP
I2C address at A0.
RESET
Close to Mstar IC
System XTAL
DEBUG
I2S
KEY PAD& IR

MSD MIU

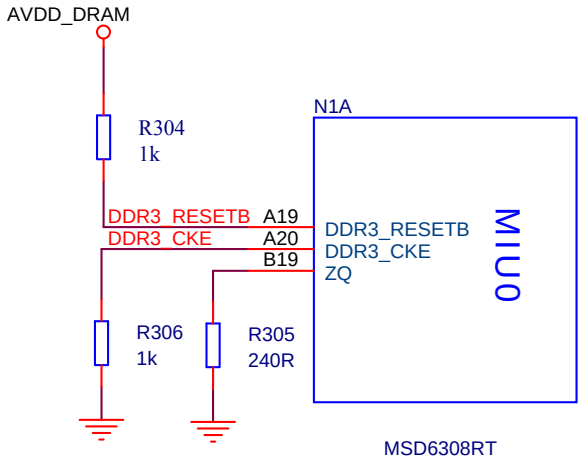

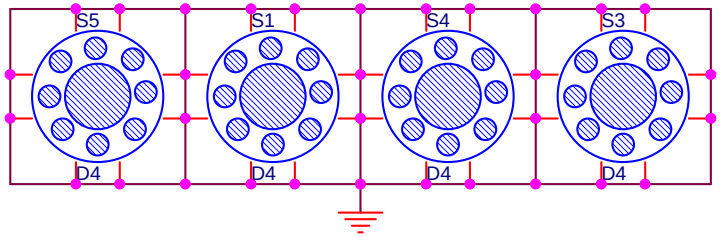

Hisense Electric Co.,Ltd. No.11,Jiangxi Road,Qingdao,China WWW.HISENSE.COM		
Title: Hisense MSD6308RT		
Size: A	Schematic Name: <Doc>	Rev: 1.0
Date: Monday, June 01, 2015	Sheet 4 of 14	

LVDS PORT

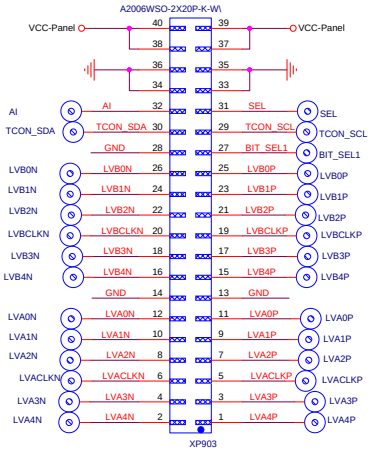

Power decouple

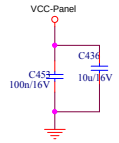

Note:靠近LVDS插座

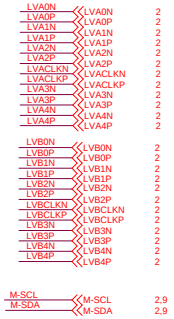

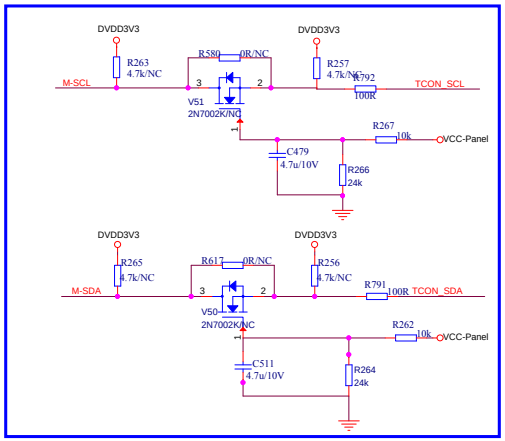

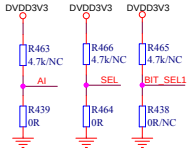

Hisense	Hisense Electric Co.,Ltd. No.11,Jiangxi Road,Qingdao,China WWW.HISENSE.COM	
	Title: Hisense MSD6308RT	
	Size: C — Schematic Name: <Doc>	Rev: 1.0
	Date: Monday, June 01, 2015	Sheet 5 of 14

VGA

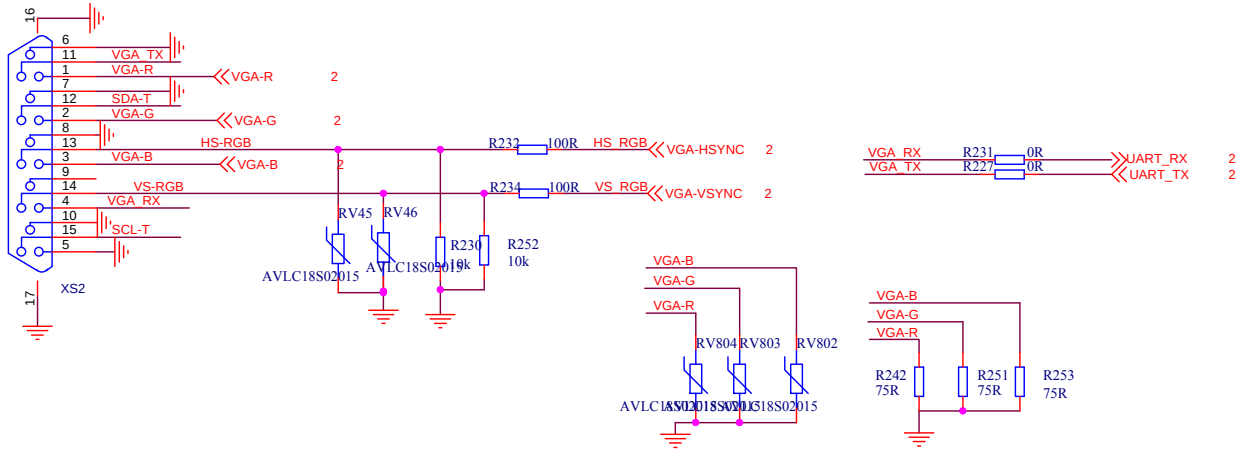

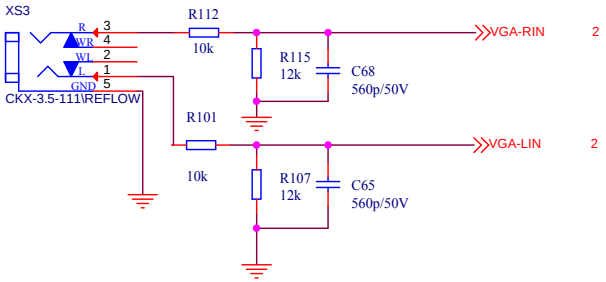

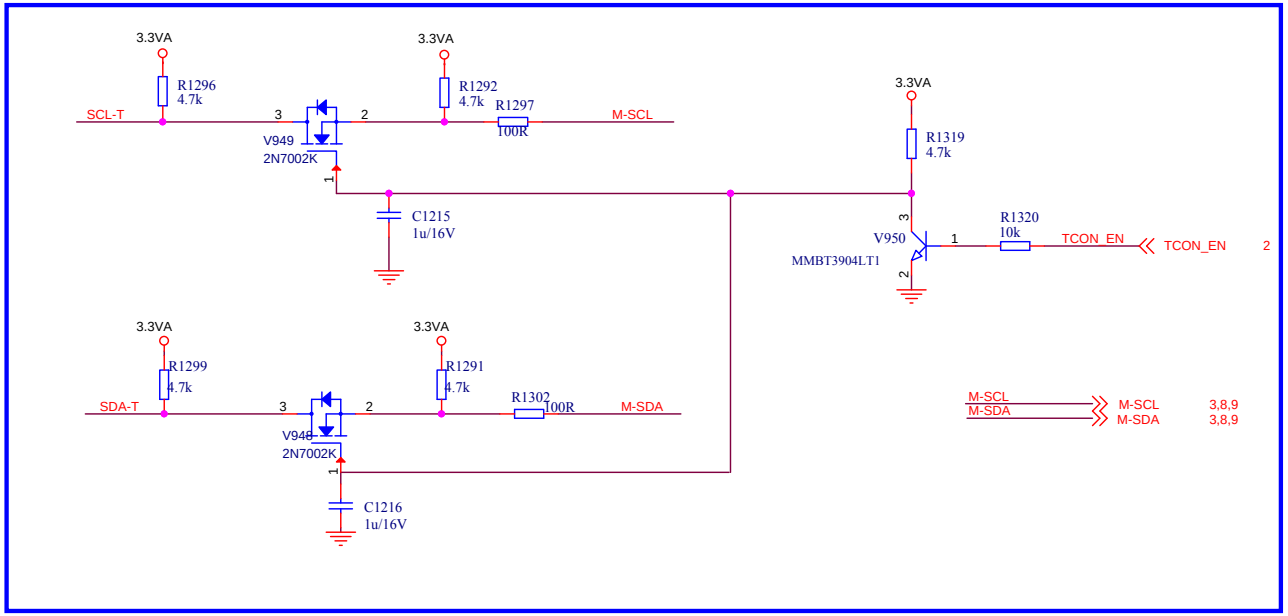

Hisense Electric Co.,Ltd. No.11,Jiangxi Road,Qingdao,China WWW.HISENSE.COM		
Title: Hisense MSD6308RT		
Size: B	Schematic Name: <Doc>	Rev: 1.0
Date: Monday, June 01, 2015	Sheet 6 of 14	

USB INTERFACE

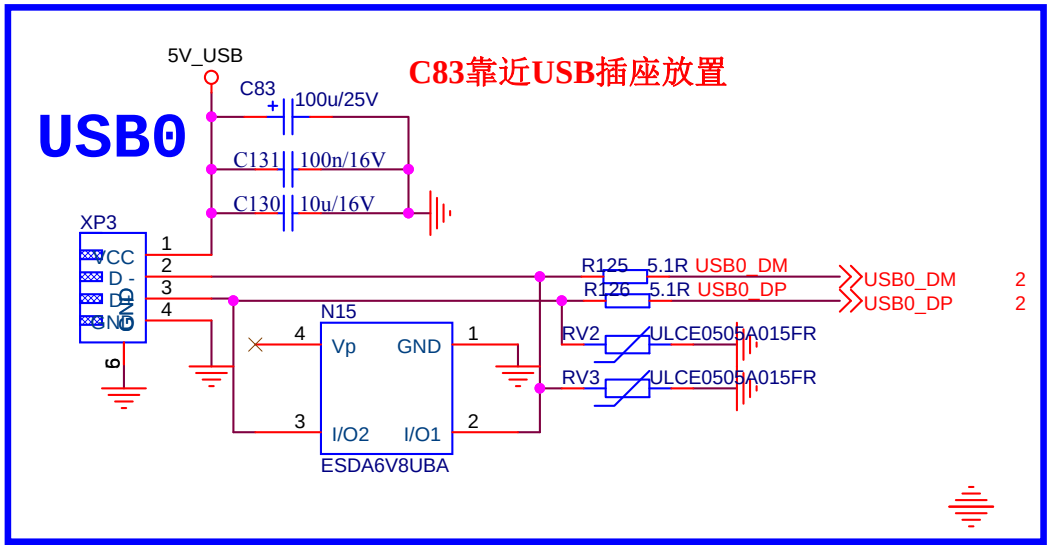

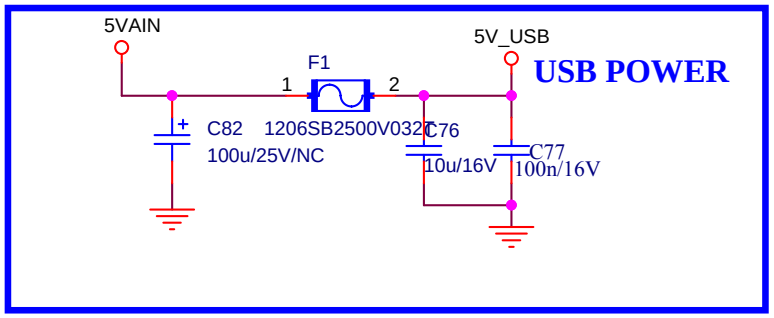

Hisense	Hisense Electric Co.,Ltd. No.11,Jiangxi Road,Qingdao,China WWW.HISENSE.COM	
	Title: Hisense MSD6308RT	
	Size: A — Schematic Name: <Doc>	Rev: 1.0
	Date: Monday, June 01, 2015	Sheet 7 of 14

COAXIAL OUT

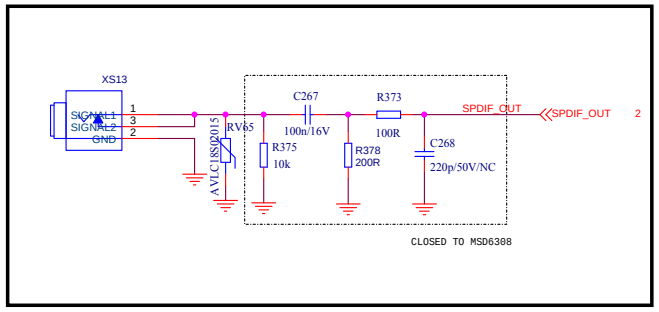

AV&HDTV Input

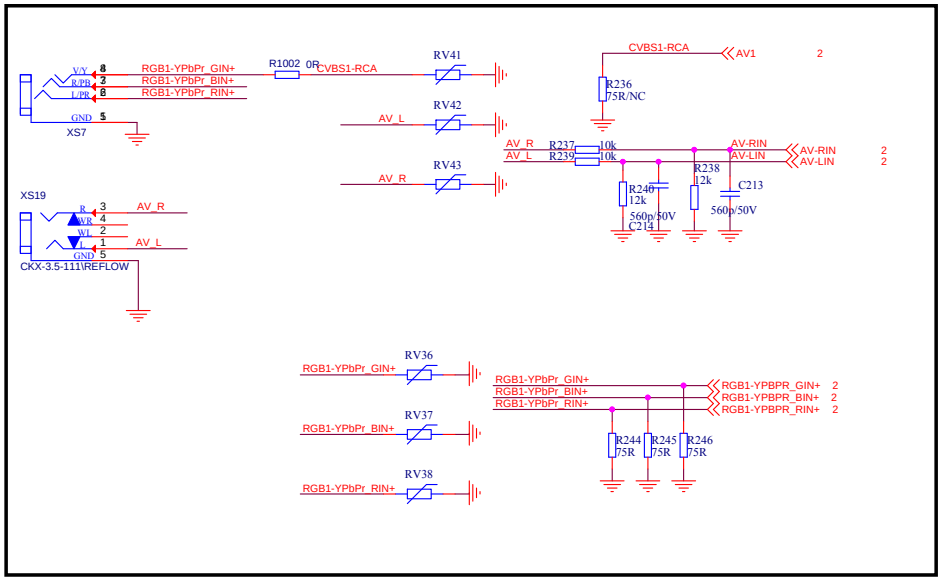

HDTV Input

Hisense	Hisense Electric Co.,Ltd. No.11,Jiangxi Road,Qingdao,China WWW.HISENSE.COM	
	Title: Hisense MSD6308RT	
	Size: Schematic Name: Custom<Doc>	Rev: 1.0
	Date: Monday, June 01, 2015	Sheet 8 of 14

HDMI1

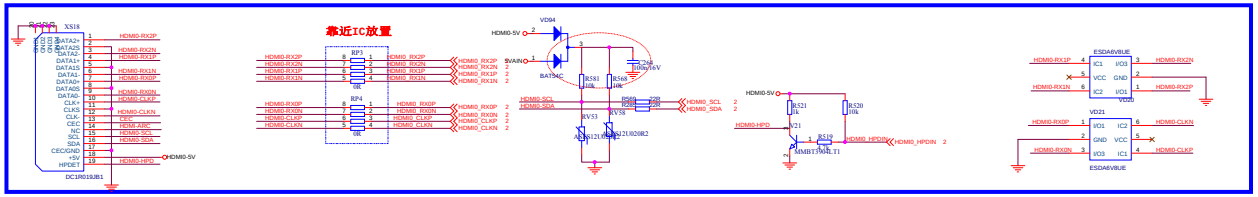

HDMI3

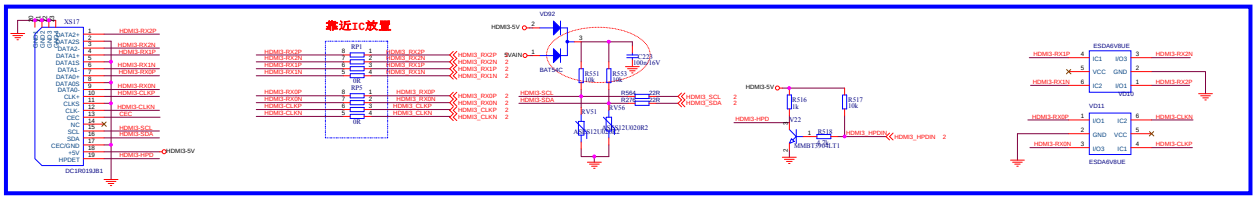

CEC & ARC

ARC_DET

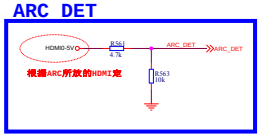

Hisense Electric Co.,Ltd. No.11,Jiangxi Road,Qingdao,China WWW.HISENSE.COM		
Title: Hisense MSD6308RT		
Size: D	Schematic Name: <Doc>	Rev: 1.0
Date: Monday, June 01, 2015	Sheet 9 of 14	

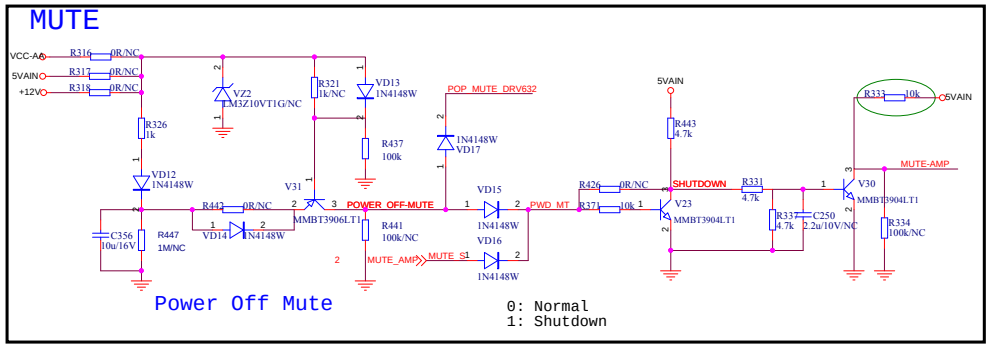

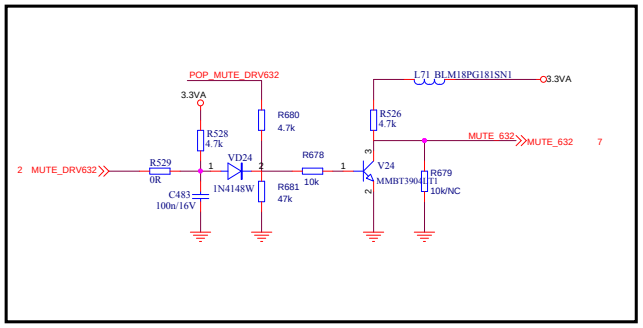

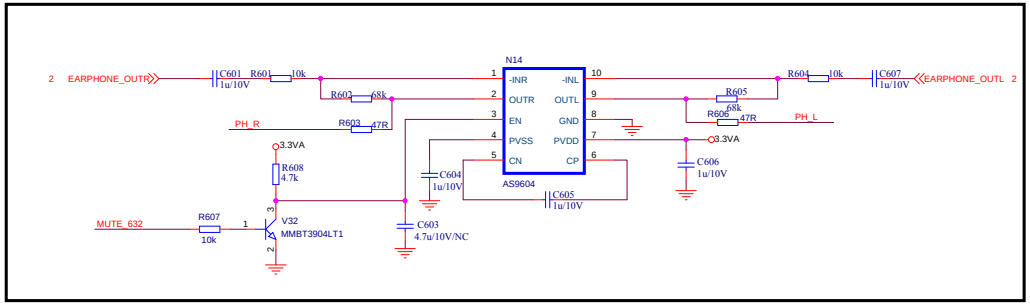

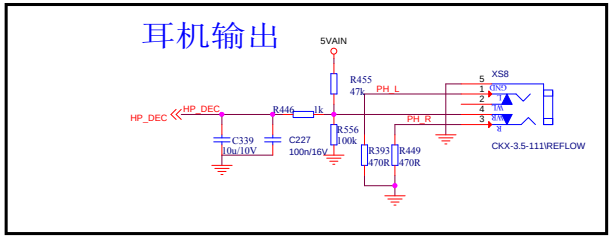

SPEAKER AMP

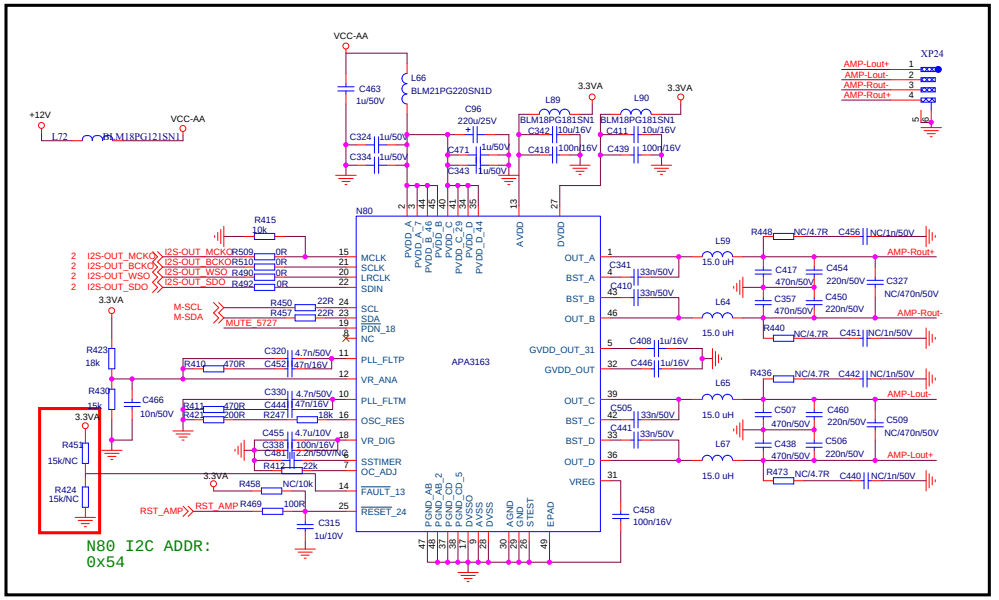

Hisense Electric Co.,Ltd.
No.11,Jiangxi Road,Qingdao,China
WWW.HISENSE.COM

Title	Hisense MSD6308RT	
Size	Schematic Name: Custom<Doc>	Rev: 1.0
Date: Monday, June 01, 2015	Sheet 10 of 14	

Date	Change List
20140626	Release
20150601	1.增加

Hisense Electric Co.,Ltd.
No.11,Jiangxi Road,Qingdao,China
WWW.HISENSE.COM

Title
Hisense MSD6308RT

Size	Schematic Name	Rev
	A <Doc>	1.0

Date: Monday, June 01, 2015 Sheet 10 of 14

ETHERNET PHY

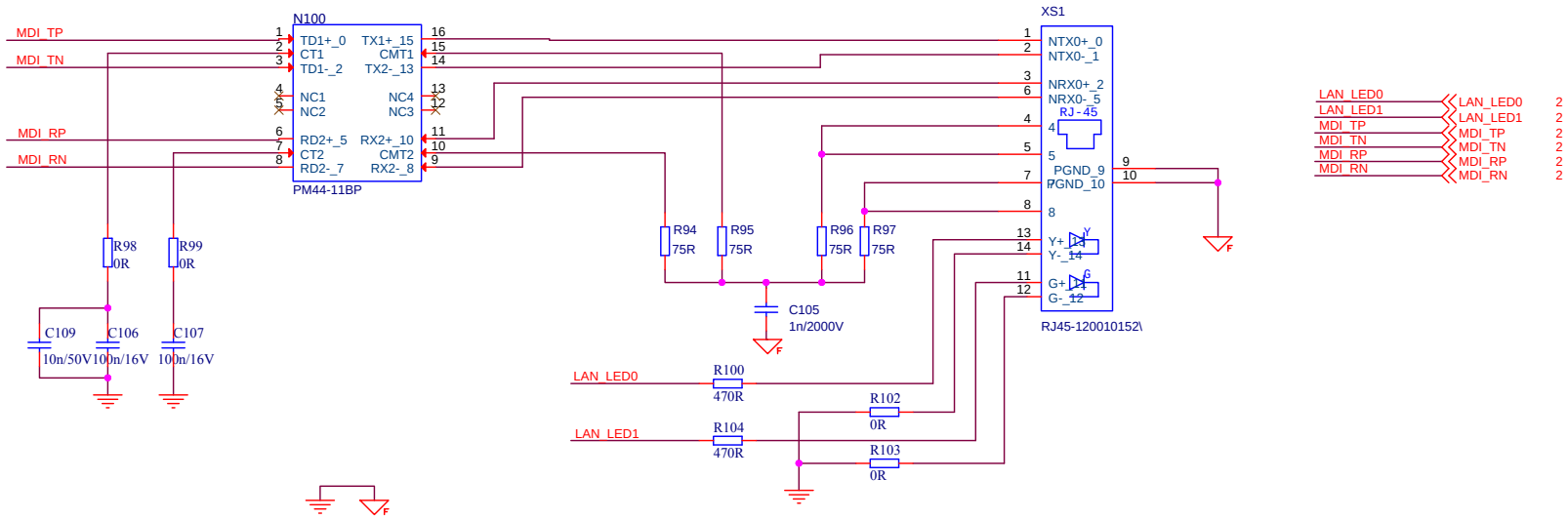

Hisense Electric Co.,Ltd. No.11,Jiangxi Road,Qingdao,China WWW.HISENSE.COM		
Title: Hisense MSD6308RT		
Size: B	Schematic Name: <Doc>	Rev: 1.0
Date: Monday, June 01, 2015	Sheet 11 of 14	

NAND FLASH

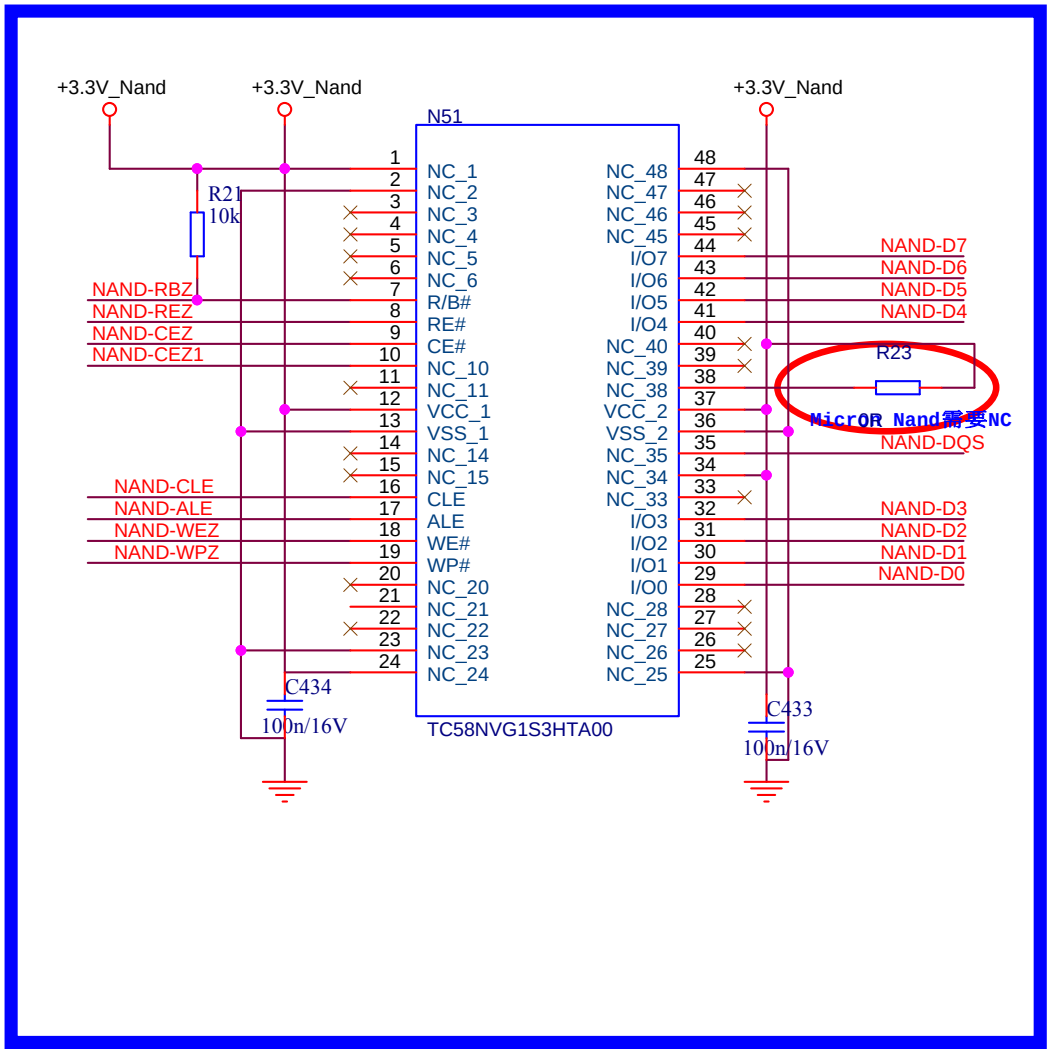

NAND Power

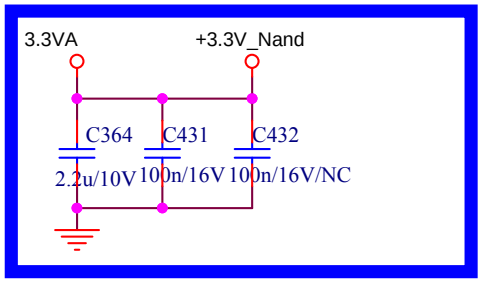

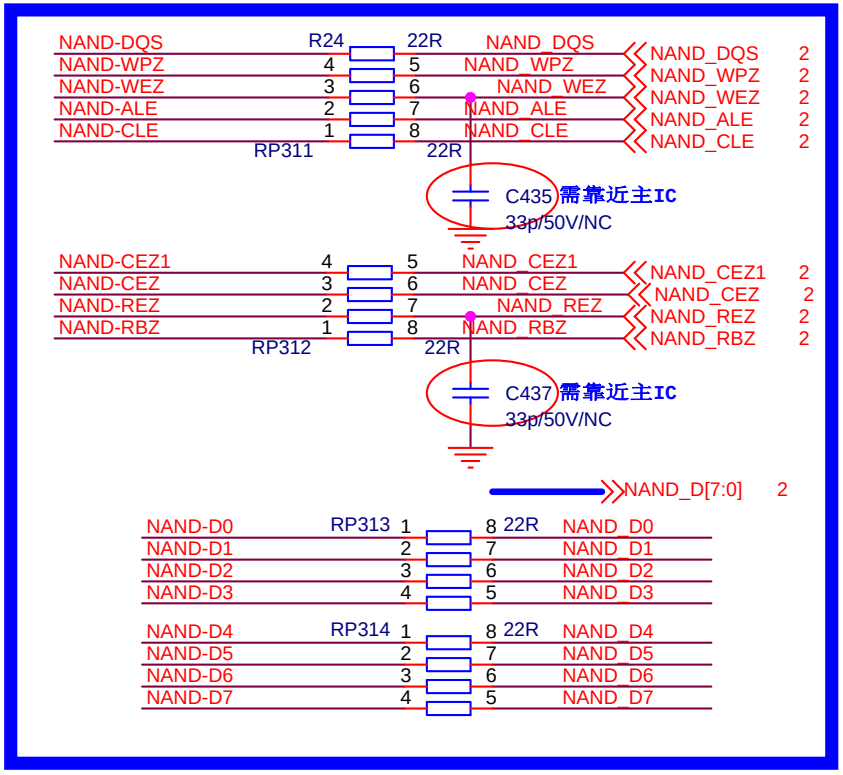

	Hisense Electric Co.,Ltd. No.11,Jiangxi Road,Qingdao,China WWW.HISENSE.COM	
	Title: Hisense MSD6308RT	
Size:	Schematic Name: A <Doc>	Rev: 1.0
Date: Monday, June 01, 2015	Sheet 12 of 14	

I2C Address:
Write:C0
Read:C1

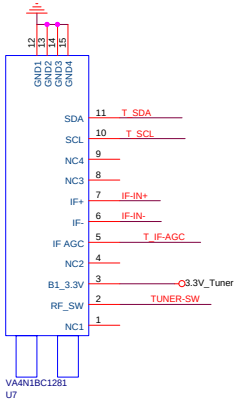

Tuner Connector

使用FK1602或VA1P1BF8402时，C364、C367、C359和L32NC掉，
C357=0R，C365=0R，R313=0R，R314=0R，R312=0R，R315=0R

BPF FOR 38.9MHz OR 38MHZ

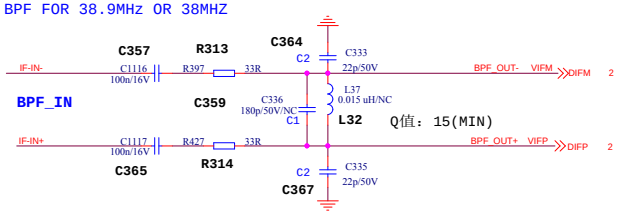

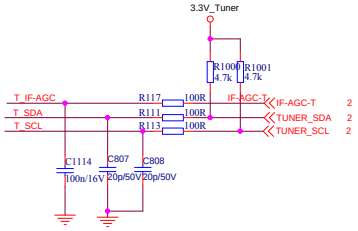

C359=180P,FOR 38.9MHZ OR 38MHZ(PAL)
C359=100P,FOR 45.75MHZ(NTSC)

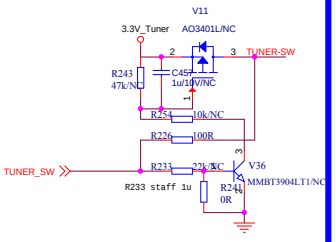

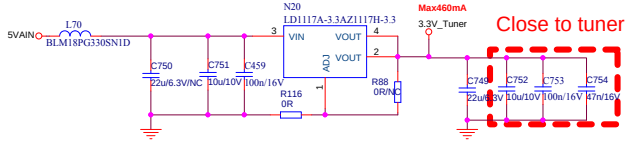

Hisense Electric Co.,Ltd.
No.11,Jiangxi Road,Qingdao,China
WWW.HISENSE.COM

Title: Hisense MSD6308RT

Size	Schematic Name	Rev
C	<Doc>	1.0

Date: Monday, June 01, 2015 Sheet 13 of 14

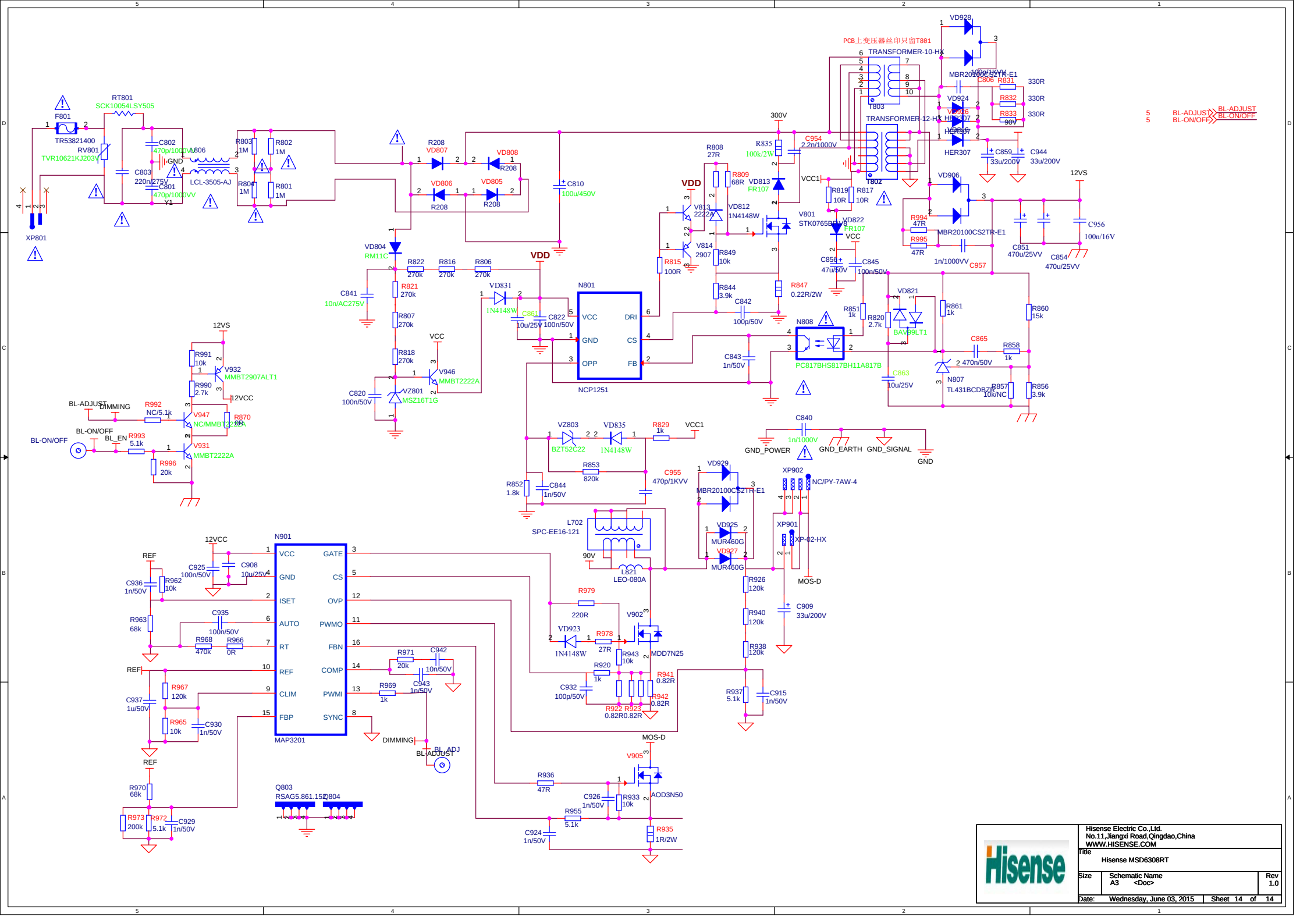
PCB上变压器丝印只留T801
TRANSFORMER-10-HX
TRANSFORMER-12-HX
T803
T802
T801
RT801
SCK10054LSY505
F801
TR53821400
RV801
TVR10621KJ203V
LCL-3505-AJ
XP801
NCP1251
N801
VCC
GND
OPP
DRI
CS
FB
N808
PC817BHS817BH11A817B
MAP3201
N901
VCC
GND
ISET
AUTO
RT
REF
CLIM
FBP
GATE
CS
OVP
PWMO
FBN
COMP
PWMI
SYNC
L702
SPC-EE16-121
L821
LEO-080A
XP902
NC/PY-7AW-4
XP901
XP-02-HX
MOS-D
V902
MDD7N25
V905
AOD3N50
V801
STK0765BDV3
V932
MMBT2907ALT1
V947
NC/MMBT2222A
V931
MMBT2222A
V946
MMBT2222A
V813
2222A
V814
2907
VD928
VD924
VD926
VD906
HER307
MBR20100CS2TR-E1
MBR20100CS2TR-E1
VD929
MBR20100CS2TR-E1
VD925
MUR460G
VD927
MUR460G
VD923
1N4148W
VD804
RM11C
VD831
1N4148W
VD835
1N4148W
VZ803
BZT52C22
VZ801
MSZ16T1G
VD807
VD808
VD806
VD805
VD813
FR107
VD812
1N4148W
VD822
FR107
VD821
BAV99LT1
N807
TL431BCDBZR
GND_POWER
GND_EARTH
GND_SIGNAL
GND
VDD
VCC
VCC1
12VS
12VCC
300V
90V
BL-ADJUST
BL-ON/OFF
DIMMING
BL_EN
BL_ADJ
REF
Q803
RSAG5.861.152
Q804
C802
470p/1000VV
C803
220n/275V
C801
470p/1000VV
Y1
C806
100p/1KVV
C954
2.2n/1000V
C859
33u/200V
C944
33u/200V
C956
100n/16V
C851
470u/25VV
C854
470u/25VV
C957
1n/1000VV
C810
100u/450V
C841
10n/AC275V
C820
100n/50V
C861
10u/25V
C822
100n/50V
C856
470u/50V
C845
100n/50V
C842
100p/50V
C843
1n/50V
C840
1n/1000V
C865
470n/50V
C863
10u/25V
C858
1k
C955
470p/1KVV
C844
1n/50V
C925
100n/50V
C908
10u/25V
C935
100n/50V
C936
1n/50V
C937
1u/50V
C930
1n/50V
C942
10n/50V
C943
1n/50V
C932
100p/50V
C915
1n/50V
C926
1n/50V
C924
1n/50V
C929
1n/50V
C909
33u/200V
R831
330R
R832
330R
R833
330R
R835
100k/2W
R808
27R
R809
68R
R819
10R
R817
10R
R994
47R
R995
47R
R847
0.22R/2W
R844
3.9k
R849
10k
R815
100R
R851
1k
R820
2.7k
R861
1k
R860
15k
R857
10k/NC
R856
3.9k
R853
820k
R852
1.8k
R829
1k
R979
220R
R978
27R
R943
10k
R920
1k
R941
0.82R
R942
0.82R
R922
0.82R
R923
0.82R
R926
120k
R940
120k
R938
120k
R937
5.1k
R936
47R
R933
10k
R955
5.1k
R935
1R/2W
R962
10k
R963
68k
R968
470k
R966
0R
R971
20k
R969
1k
R967
120k
R965
10k
R970
68k
R973
200k
R972
5.1k
R991
10k
R990
2.7k
R992
NC/5.1k
R870
0R
R993
5.1k
R996
20k
R821
270k
R807
270k
R818
270k
R822
270k
R816
270k
R806
270k
R208
VD807
VD808
VD806
VD805
R208
R208
R208
R803
1M
R802
1M
R804
1M
R801
1M
L806
C806
100p/1KVV
R831
330R
R832
330R
R833
330R
90V
BL-ADJUST
BL-ON/OFF
5
5
Hisense
Hisense Electric Co.,Ltd.
No.11,Jiangxi Road,Qingdao,China
WWW.HISENSE.COM
Title
Hisense MSD6308RT
Size
A3
Schematic Name
<Doc>
Rev
1.0
Date:
Wednesday, June 03, 2015
Sheet 14 of 14

更改履历	更改版本	更改内容	更改人	更改日期
	V1.1			
	V1.2			
	V1.3			
	V1.4			
	V1.5			

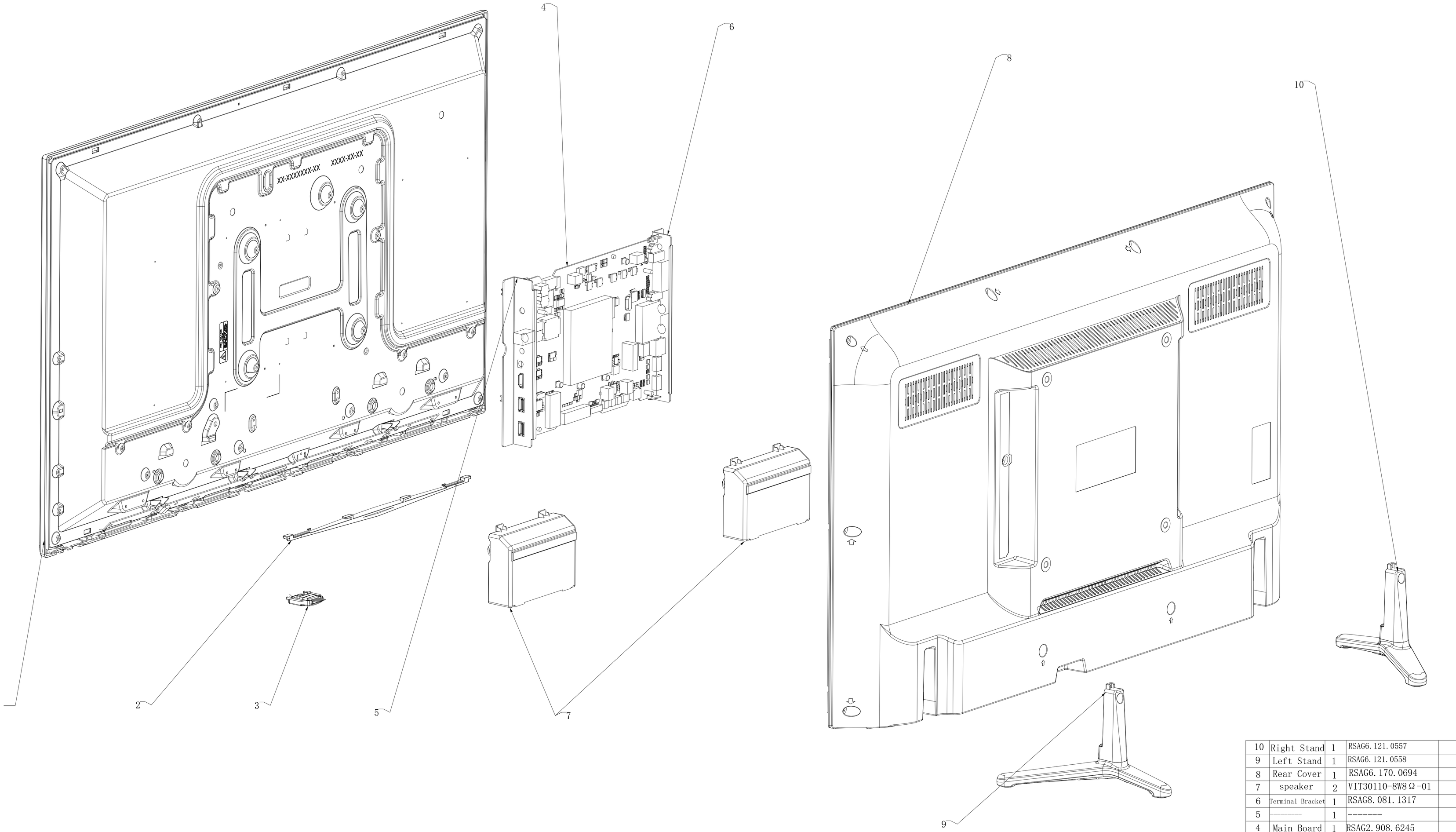

序号	名 称	数量	代 号	备 注
10	Right Stand	1	RSAG6.121.0557	
9	Left Stand	1	RSAG6.121.0558	
8	Rear Cover	1	RSAG6.170.0694	
7	speaker	2	VIT30110-8W8Ω-01	
6	Terminal Bracket	1	RSAG8.081.1317	
5	----------	1	--------	
4	Main Board	1	RSAG2.908.6245	
3	LED Lens	1	RSAG8.640.0442	
2	Bracket	1	RSAG8.647.0802	
1	Panel	1	HD315DH-F13	

更改标记	数量	更改单号	签名	日期

未注公差标准 单位：mm

设 计	陆 荐
审 核	
工 艺	
标准化	
批 准	

LHD32K260AM
结构爆炸图

阶段标记	质 量	比 例
		1:2

第 页 共 页

青岛海信电器股份有限公司

旧底图总号

底图总号

签 名

格式(1) 幅面:A1