LCD Television

Service Manual

Chassis： MTK5657

Product:

LTDN40K321UWAU 、 LTDN50K321UWT 、 LTDN55K321UWT 、 LTDN58K321UWAU

Ver 1.0

Hisense Electric Co.，Ltd.

August，2015

Contents

Contents - 2 -
Service Manual - 3 -
1. Precautions and notices - 3 -
1.1 Warning - 4 -
1.2 Notes - 7 -
2. Product Function Specifications - 9 -
2.1 TV Front and Rear - 9 -
2.2 TV basic configure - 11 -
2.3 Main board and power board - 11 -
2.4 Specification - 15 -
2.5 Remote control - 16 -
3. Factory/Service OSD Menu and Adjustment - 17 -
3.1 How to enter the Factory OSD Menu - 17 -
3.2 Factory OSD Menu - 19 -
3.3 Designer Menu - 22 -
4. Software Upgrading - 25 -
4.1 USB Upgrdaing - 25 -
4.2 USB upgrade defeat - 27 -
4.3 Upgrading with the FlashTool v0.6.9.1.exe - 29 -
5. Trouble shooting - 33 -
5.1 Troubleshooting for Remote Control - 34 -
5.2 Troubleshooting for Function Key - 35 -
5.3 TV won’t Power On - 36 -
5.4 Troubleshooting for Audio - 37 -
5.5 Troubleshooting for TV/VGA/HDMI input - 38 -
5.6 Troubleshooting for YPbPr input - 39 -
5.7 Troubleshooting for Video input - 40 -
6. Signals Block Diagram and power assign: - 40 -
7. Schematic circuit diagram - 40 -
8. Explode View - 40 -

Service Manual

1. Precautions and notices

BEFORE SERVICING THE LCD TV, READ THE SAFETY PRECAUTIONS IN THIS MANUAL.

USE ONLY MANUFACTURER SPECIFIED REPLACEMENT PARTS WHEN SERVICING.

USE OF NON-AUTHORIZED PARTS WILL VOID THE MANUFACTURE'S WARRANTY

Proper service and repair is important to the safe, reliable operation of all Hisense Equipment. The service procedures recommended by Hisense and described in this Service Guide are effective methods of performing service operations. Some of these service operations require the use of tools specially designed for the purpose. The special tools should be used when and as recommended.

It is important to note that this manual contains various CAUTIONS and NOTICES which should be carefully read in order to minimize the risk of personal injury to service personnel. The possibility exists that improper service methods may damage the equipment and pose risk of personal injury

. It is also important to understand that these CAUTIONS and NOTICES ARE NOT EXHAUSTIVE. Service should only be performed by an experienced electronics

techician trained in the proper Television safety and service methods and procedures Hereafter throughout this manual, HISENSE will be referred to.

1.1 Warning

1.1.1

Critical components having special safety characteristics are identified with a ▲ by the Ref. No. in the parts list. Use of non-manufacturer's recommended parts may create shock, fire, or other hazards. Under no circumstances should the original design be modified or altered without written permission from RCA. Hisense Eassumes no liability, express or implied, arising out of any unauthorized modification of design. Servicetech assumes all liability.

DANGER CAUTION

TO ENSURE THE CONTINUED RELIABILITY OF THIS PRODUCT, USE ONLY ORIGINAL MANUFACTURER'S REPLACEMENT PARTS, WHICH ARE LISTED WITH THEIR PART NUMBERS IN THE PARTS LIST SECTION OF THIS SERVICE GUIDE.

1.1.2.

All ICs and many other semiconductors are susceptible to electrostatic discharges (ESD). Careless handling during repair can reduce life drastically. When repairing, be sure to use anti-static table mats and properly use a grounding wrist stra. Keep components and tools also at this same potential.

IMPORTANT:

Always disconnect the power cord from AC outlet before replacing parts or modules.

1.1.3

To prevent electrical shock, use only a properly grounded 3 prong outlet or extension cord.

1.1.4

When replacement parts are required, be sure to use replacement parts specified by the manufacturer or have the same characteristics as the original part. Unauthorized substitutions may result in fire, electric shock, or other hazards and will void the manufacturer's warranty.

1.1.5

Safety regulations require that after a repair the set must be returned in its original condition. In addition, prior to closing set, check that:

-Note:

>All wire harnesses and flex cables are properly routed and secured with factory tape and/or mounted cable clamps.

> All cables and connectors are properly insulated and do not have any bare wires/lead exposed

1.1.6

(1) Do not supply a voltage higher than that specified to this product. This may

damage the product and may cause a fire.

(2) Do not use this product:

> High humidity areas

> In an area where any water could enter or splash into the unit.

High humidity and water could damage the product and cause fire.

(3) If a foreign substance (such as water, metal, or liquid) gets inside the panel module, immediately turn off the power. Continuing to use the product may cause fire or electric shock.

(4) If the product emits smoke, and abnormal smell, or makes an abnormal sound, immediately turn off the power. Continuing to use the product, it may cause fire or electric shock.

(5) Do not pull out or insert the power cable from/to an outlet with wet hands. It may cause electric shock.

(6) Do not damage or modify the power cable. It may cause fire or electric shock.

(7) If the power cable is damaged, or if the connector is loose, do not use the product: otherwise, this can lead to fire or electric shock.

(8) If the power connector or the connector of the power cable becomes dirty or dusty, wipe it with a dry cloth. Otherwise, this can lead to fire.

(9) Use only with the cart, stand, tripod, bracket, or table specified by the manufacturer, or sold with the apparatus. When a cart is used, use caution when moving the cart/apparatus combination to avoid injury from tip-over

1.2 Notes

Notes on Safe Handling of the LCD panel and during service

The work procedures shown with the Note indication are important for ensuring the safety of the product and the servicing work. Be sure to follow these instructions.

• Before starting the work, secure a sufficient working space.

• At all times other than when adjusting and checking the product, be sure to turn OFF the POWER Button and disconnect the power cable from the power source of the TV during servicing.

• To prevent electric shock and breakage of PC board, start the servicing work at least 30 seconds after the main power has been turned off. Especially when installing and removing the power board, start servicing at least 2 minutes after the main power has been turned off.

• While the main power is on, do not touch any parts or circuits other than the ones specified. If any connection other than the one specified is made between the measuring equipment and the high voltage power supply block, it can result in electric shock or may trip the main circuit breaker When installing the LCD module in, and removing it from the packing carton, be sure to have at least two persons perform the work.

• When the surface of the panel comes into contact with the cushioning materials, be sure to confirm that there is no foreign matter on top of the cushioning materials before the surface of the panel comes into contact with the cushioning materials. Failure to observe this precaution may result in, the surface of the panel being scratched by foreign

matter.

• Be sure to handle the circuit board by holding the large parts as the heat sink or transformer. Failure to observe this precaution may result in the occurrence of an abnormality in the soldered areas.

• Do not stack the circuit boards. Failure to observe this precaution may result in problems resulting from scratches on the parts, the deformation of parts, and short-circuits due to residual electric charge.

• Perform a safety check when servicing is completed. Verify that the peripherals of the serviced points have not undergone any deterioration during servicing. Also verify that the screws, parts and cables removed for servicing purposes have all been returned to their proper locations in accordance with the original setup.

The lightning flash with arrowhead symbol, within an equilateral triangle is intended to alert the user to the presence of uninsulated dangerous voltage within the products enclosure that may be of sufficient magnitude to constitute a risk of electric shock.

The exclamation point within an equilateral triangle is intended to alert the user to the presence of important operating and maintenance (servicing) instructions in the literature accompanying the set.

2. Product Function Specifications

2.1 TV Front and Rear

TV Front

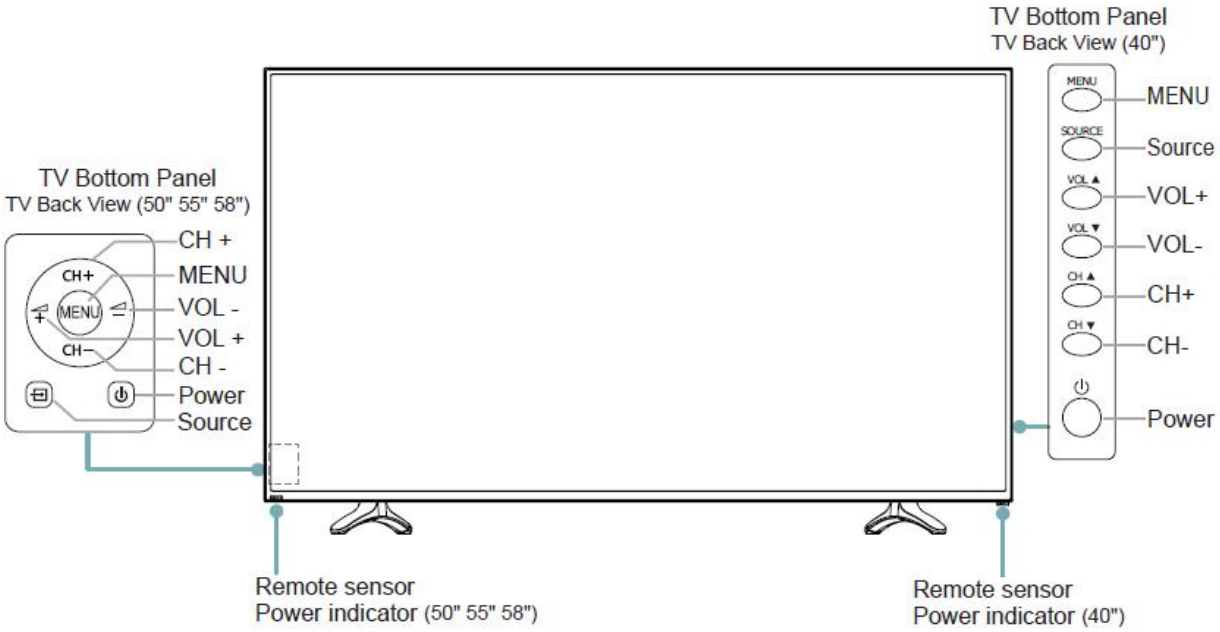

Item	*Description*
Remote sensor	Receives remote signals from the remote control. Do not put anything near the sensor, as its function may be affected.
Power indicator	The light is red in standby mode.
MENU	Select among the different input signal sources and put the TV in standby mode.
Source	Select among the different input signal sources.
VOL + / -	Adjust the volume.
CH + / -	Select the channel.
Power button ⏻	Turn on the TV or put the TV in standby mode. **Caution:** The TV continues to receive power even in standby mode. Unplug the power cord to disconnect power.

NOTES

- The Picture is Only for Reference.
- Powering on the TV requires several seconds to load program. Do not rapidly turn the TV off as it may cause the TV to work abnormally.

TV Rear

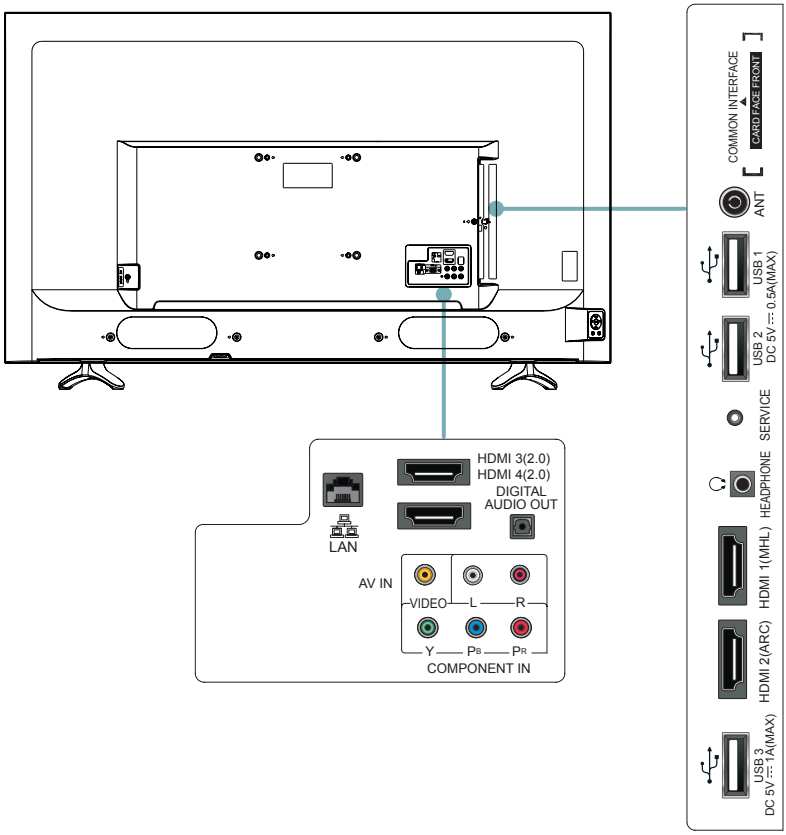

NOTES

- Check the jacks for position and type before making any connections. Loose connections can result in image or color problems. Make sure that all connections are tight and secure.
- Not all A/V devices have the ability to connect to a TV, please refer to the user's manual of your A/V device for compatibility and connections procedure.
- Before connecting external equipment, remove the mains plug from the wall socket. This may cause electric shock.

2.2 TV basic configure

TV Model	Panel Mode	LVDS(Main-Panel)	Main board	Power board
LTDN40K321UWAU	HD396DU-B01	FFC-V-51CP-275-Z1\275.0\ROH	RSAG2.908.6135-02\ROH	RSAG2.908.5687-46\ROH
LTDN50K321UWT	HD500DU-B01	FFC-51CP-260-1-Z1\260.0\RO	RSAG2.908.6135-02\ROH	RSAG2.908.5687-28\ROH
LTDN55K321UWAU	HD550DU-B51	FFC-51CP-350-1-Z1\350.0\ROH	RSAG2.908.6135-02\ROH	RSAG2.908.6106-03\ROH
LTDN58K321UWAU	HD580DU-B01	FFC-V-51CP-341-1-Z1\341\ROH	\RSAG2.908.6135-02\ROH	RSAG2.908.6106-08\ROH

2.3 Main board and power board

Main board :RSAG7.820. 6135/ROH layout:

The TOP

Detail terminals function see page 10—The TV Rear

Side connectors

Bottom connectors

LTDN40K321UWAU &LTDN50K321UWT power board : RSAG7.820.5687/ROH

power board:5687 :

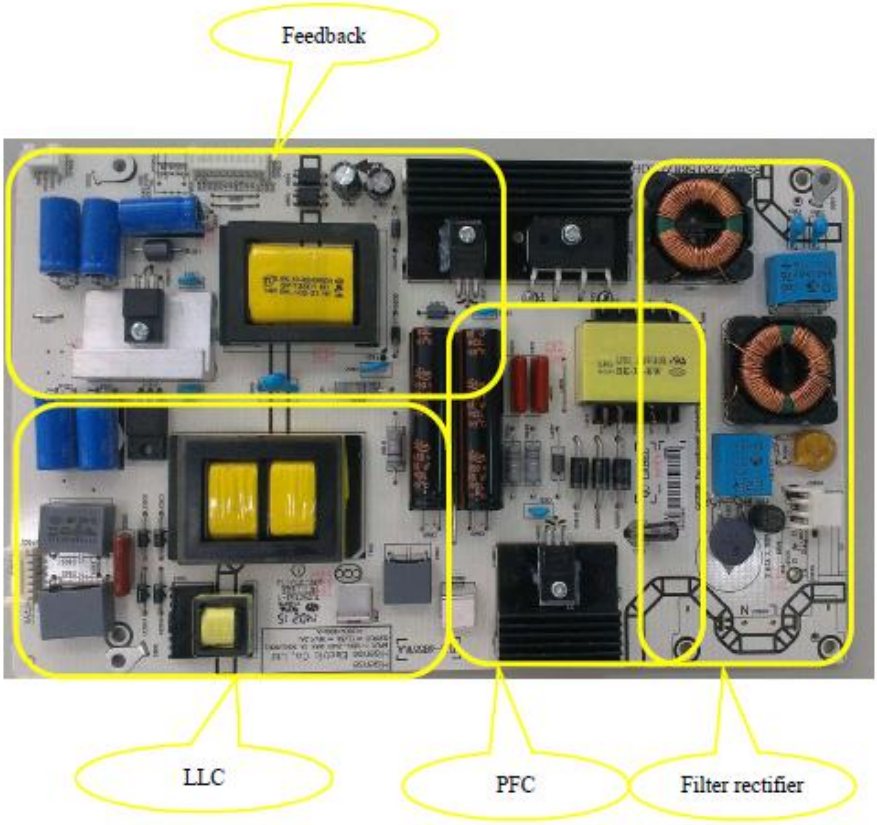

LTDN55K321UWT & LTDN58K321UWAU power board:RSAG7.820.6106/ROH

2.4 Specification

☑ Features, appearance and specifications are subject to change without notice.
If you encountered difficulty when setting up your TV, we suggest you refer to the troubleshooting tips in the User Manual.

Model Name		50K321UW	55K321UW	40K321UW	58K321UW
Dimension	Without Stand(mm)	Width: 1124 Height: 649 Depth: 82	Width: 1239 Height: 717 Depth: 83	Width: 902 Height: 515 Depth: 86	Width: 1297 Height: 755 Depth: 84
	With Stand (mm)	Width: 1124 Height: 702 Depth: 247	Width: 1239 Height: 771 Depth: 262	Width: 902 Height: 560 Depth: 192	Width: 1297 Height: 809 Depth: 263
Weight	Without Stand(kg)	13.5	16.5	8.7	18.5
	With Stand (kg)	13.8	17.3	8.9	19
Active Screen Size(Diagonal)		50 inches	55 inches	40 inches	58 inches
Screen resolution		3840×2160	3840×2160	3840×2160	3840×2160
Audio power		10W +10W	10W +10W	7W +7W	10W +10W

Power consumption		Please refer to the rating label.
Power supply		100V - 240V～ 50Hz/60Hz
Receiving systems	Analog	PAL-D/K, B/G, I SECAM-D/K, B/G, L/L'
	Digital	DVB-T/T2, DVB-C
Environmental conditions		Temperature: 5°C - 45°C Humidity: 20% - 80% RH Atmospheric pressure: 86 kPa - 106 kPa
Component Input		480 I / 60 Hz, 480 P / 60 Hz, 576 I /50 Hz, 576 P /50 Hz, 720 P / 50 Hz, 720 P / 60 Hz, 1080 I / 50 Hz, 1080 I / 60 Hz, 1080 P / 50 Hz, 1080 P / 60 Hz
HDMI Input		60 Hz (640×480, 800×600, 1024×768) 60 Hz (480 I, 480 P, 720 P, 1080 I, 1080 P) 50 Hz (576 I, 576 P, 720 P, 1080 I, 1080 P) 24 Hz 30 Hz (3840×2160 HDMI 1,2) 24 Hz 30 Hz 50 Hz 60 Hz (3840×2160 HDMI 3,4)

Remote Control

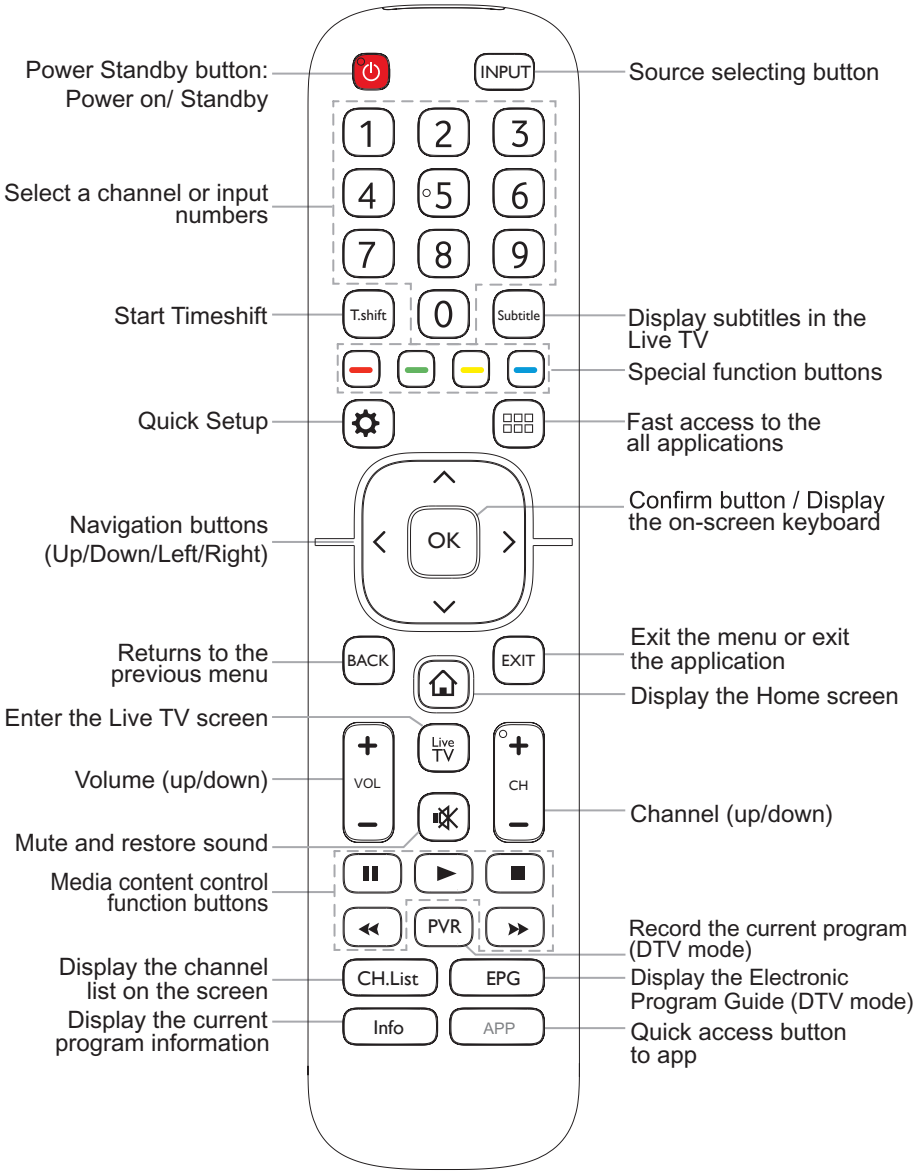

3. Factory/Service OSD Menu and Adjustment

3.1 How to enter the Factory OSD Menu

. With user's RC

1. Power TV on
2. Press button on RC and call up "**Quick Setup**" Menu.
3. **Quick Setup** -> **ALL**-> then press ">" button to ensure on RC.
4. Select **Sound**-> **Advanced Audio setting** -> **Balance**
5. When Balance is "0" , Input 1->9->6->9 in sequence.

   Note: If necessary, re-enter number keys.
6. Factory OSD appears.
7. DC power off and power on the TV, which can exit Factory OSD.

Figures as following:

Next

Setup
Picture
Sound
Channel
Network
System
About TV
Sound Mode
Standard
Headphone Volume
20
dbx-tv Audio Enhancements
Advanced Audio Settings
Restore Default Audio Settings

Next

Setup
Picture
Sound
Channel
Network
System
About TV
Sound Mode
Standard
Headphone Volume
20
dbx-tv Audio Enhancements
Advanced Audio Settings
Restore Default Audio Settings

Next

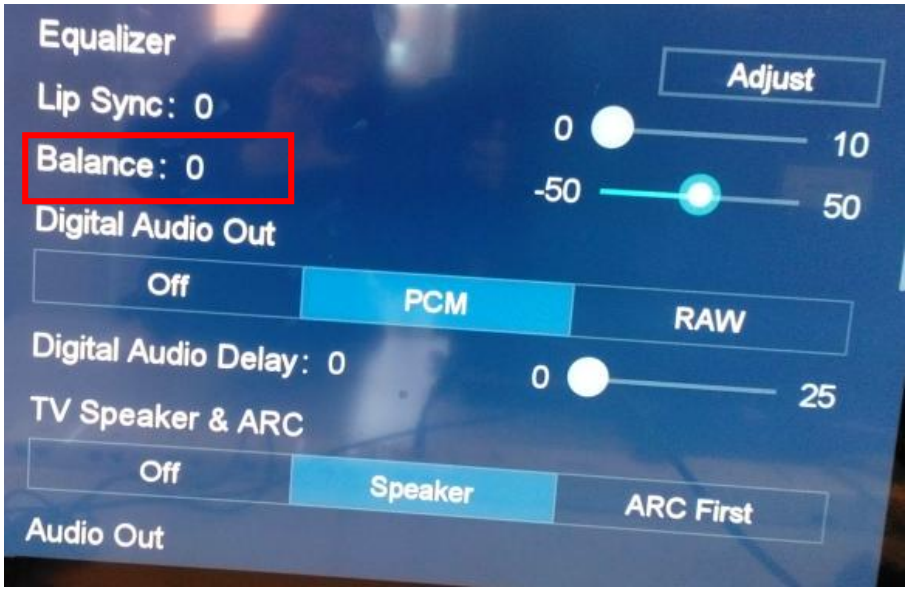

Next

When Balance is “0” ,input figures “1->9->6->9” in sequence.

3.2 Factory OSD Menu

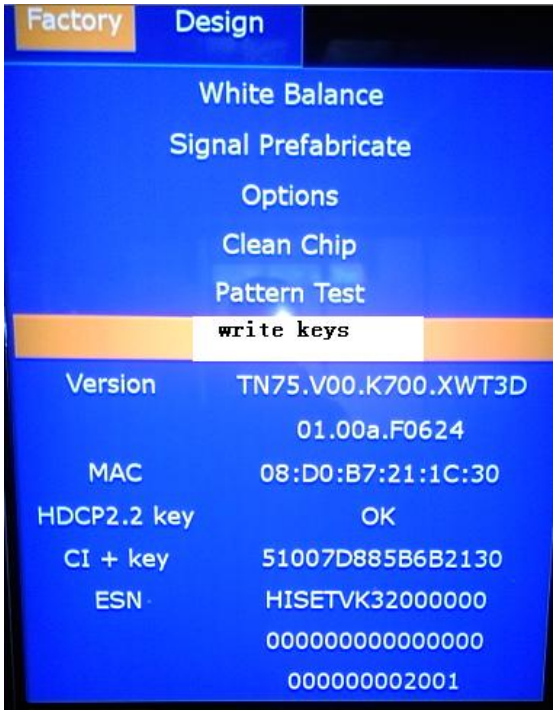

3.2.1 White Balance

Note: Different source has different WB values. Before adjusting, please change to desired source.

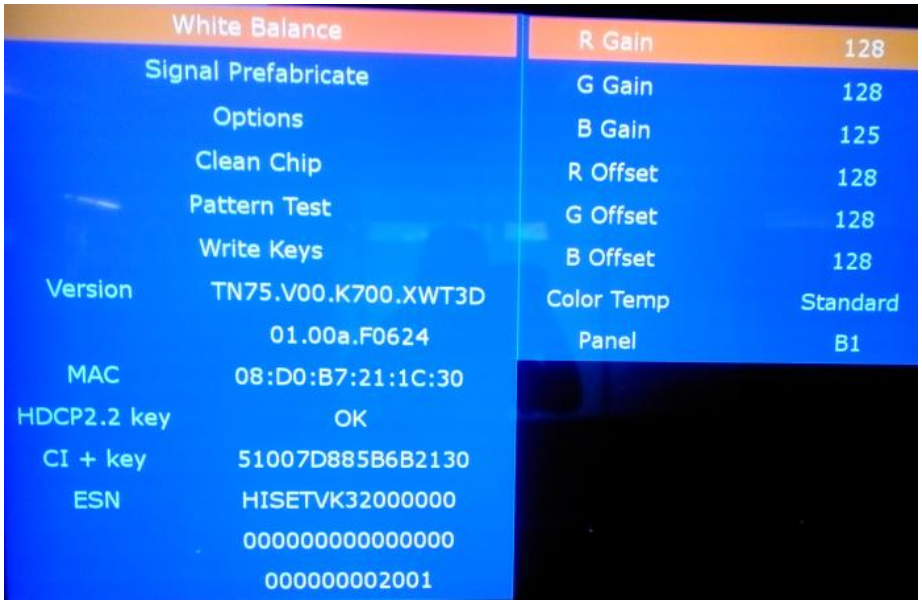

3.2.1 Signal prefabricate

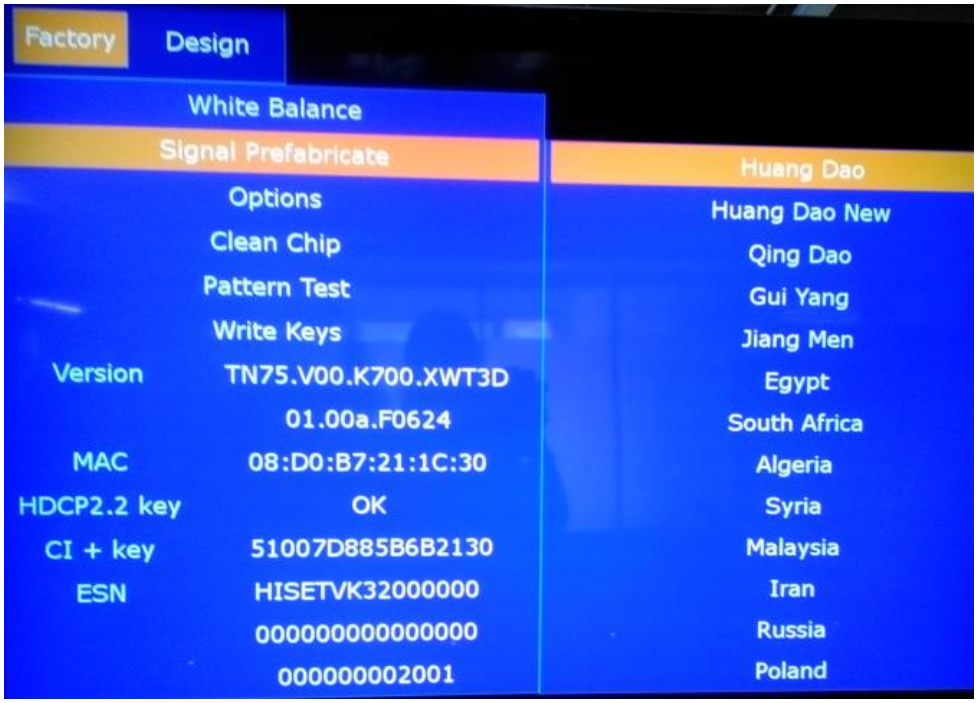

3.2.3 Factory Option

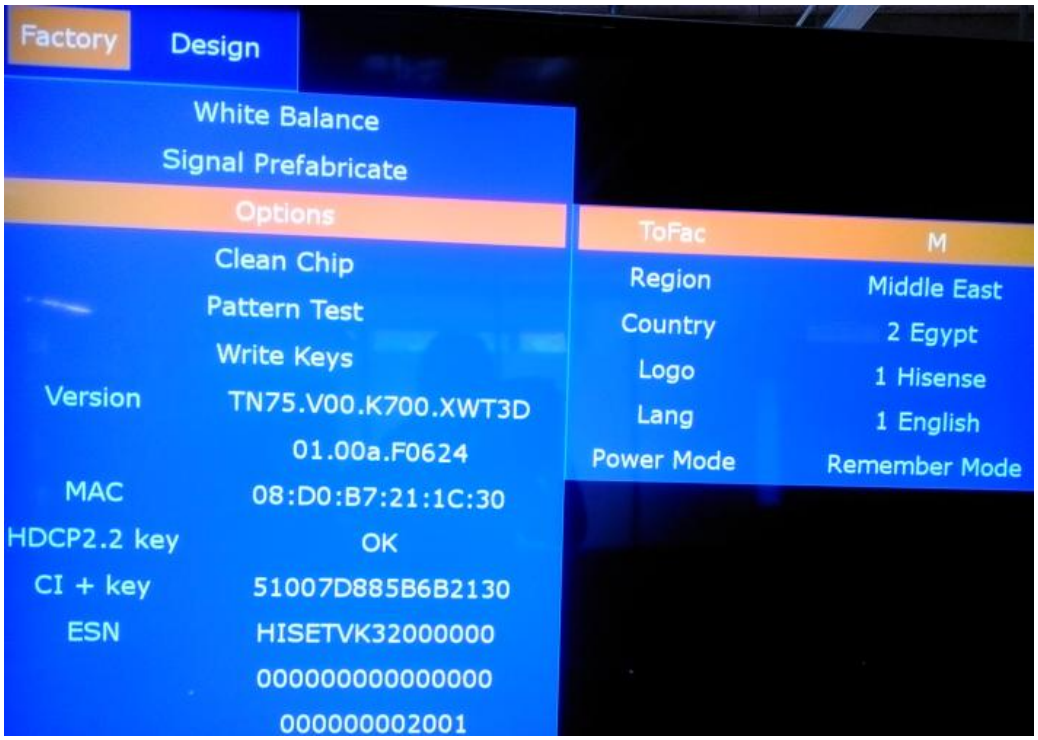

	Item	Default	Options	Notes
1	**MODE**	**M**	**M, U**	M-Can enter factory mode with factory RC or user RC. U-Can enter factory mode only with user’ s RC.

Note: ToFac “M” is only used for factory production.

Clean Chip

Write keys

Version

MAC

HDCP2.2 key

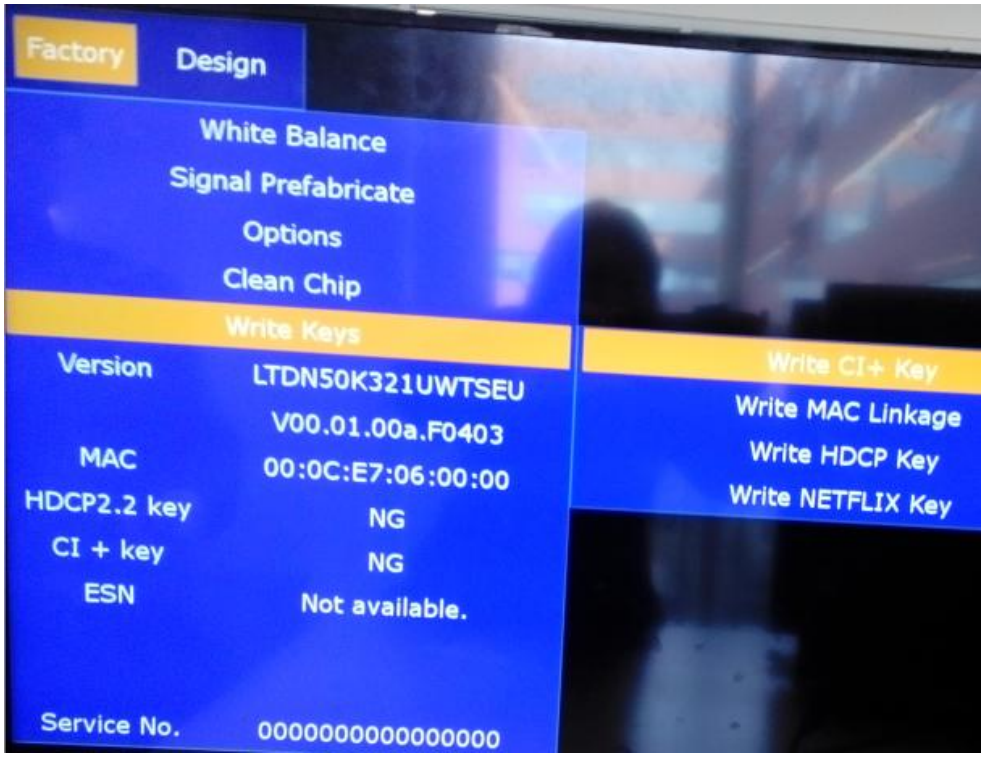

Note: The factory menu date varies according to different sources. Incase changing the factory data by error, you can choose to "Clean Protected", by which you can resume the default value.

To clear the EEPROM:

a. Select the item "**Clean chip**".

b. Press VOL+ button to clear the EEPROM data.

c. Close the OSD menu after 5 seconds.

d. Restart the TV.

3.3 Designer Menu

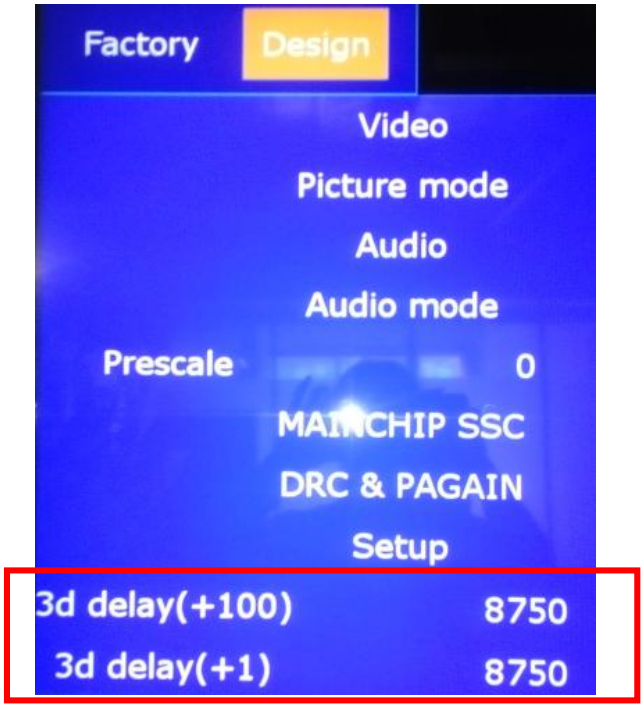

If the TV has 3D function, then Design menu has 3d delay (+100) and 3d delay (+1) items.as above figure. otherwise has not.

Video:

Picture mode

Audio

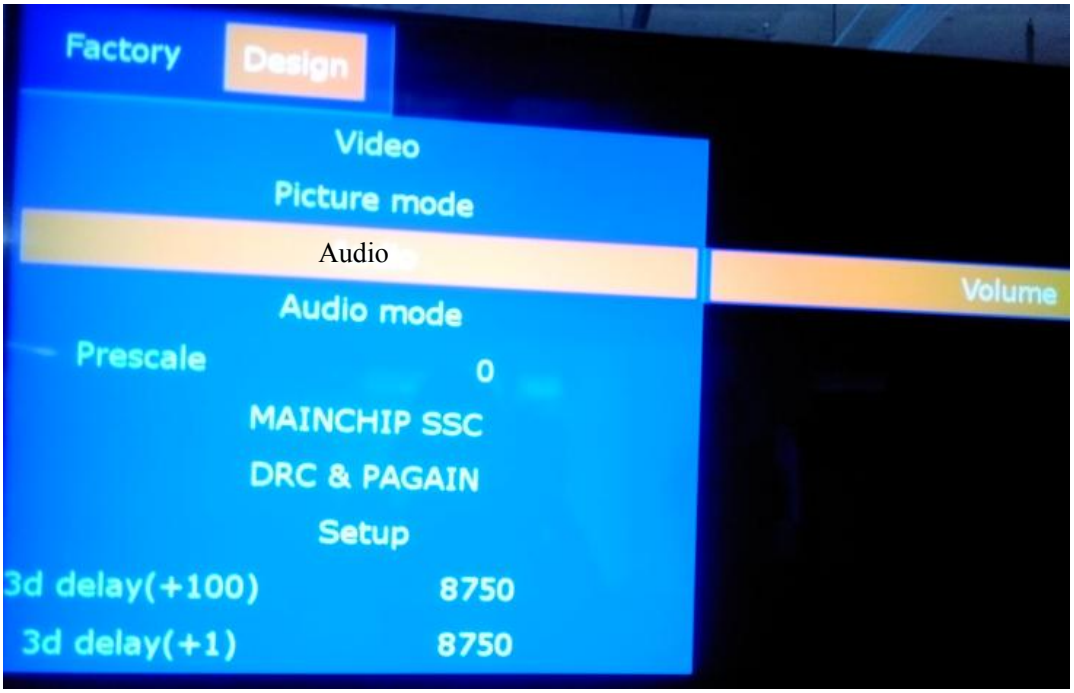

Audio mode

Notice:

Above "Factory/Service OSD Menu" is reference for chassis MTK5657 , please refer to the actual units to determine the appearances.

4. Software Upgrading

4.1 USB Upgrdaing

4.1.1 USB main software upgrading directly

The main software can be upgraded by USB Disk.

- First, copy the upgrade_loader.pkg file to USB Disk;.
- Second, make sure there is no other .pkg file in the root directory of USB Disk ,and no TCON software ,such for: 6M40.bin ; 6M50.bin ; FRC.bin
- Insert USB Disk to TV USB port, and then power on the TV. at the same time press standby button on the remote control for about 5-10s,until pop the following update interface.

- The TV will identify the software and upgrade automatically.
- After update success, TV can automatically start.

4.1.2 USB TCON software upgrading directly

4.2 USB upgrade defeat

If USB upgrading defeat, TV crashed. We must burn the emmc flash program file“ ***.bin** ”to the flash IC first. second USB disk to upgrade the **upgrade_loader.pkg** file.

Hardware connecting

Connect the unit to your pc with a USB-to-serial port cable. USB port connects to your PC and serial port to the TV’s RS232 port. As following

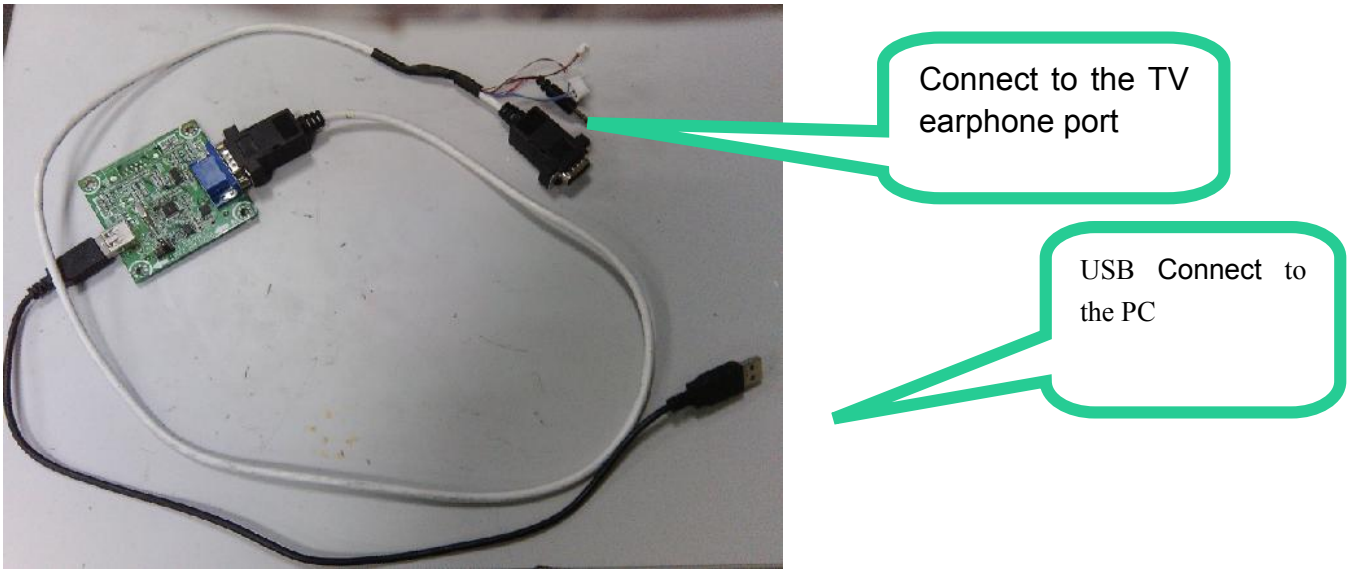

4.2.1 Install the driver

4.2.1 Install the bebug board driver for first use MTK FlashTool.

Double click the icon 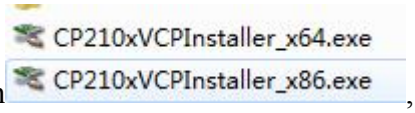

, install the driver.

Note:

X64.exe is fit for 64bit system configure of the computer.

X86.exe is fit for 32bit system configure of the computer.

Select the default value, the driver will be installed step by step.

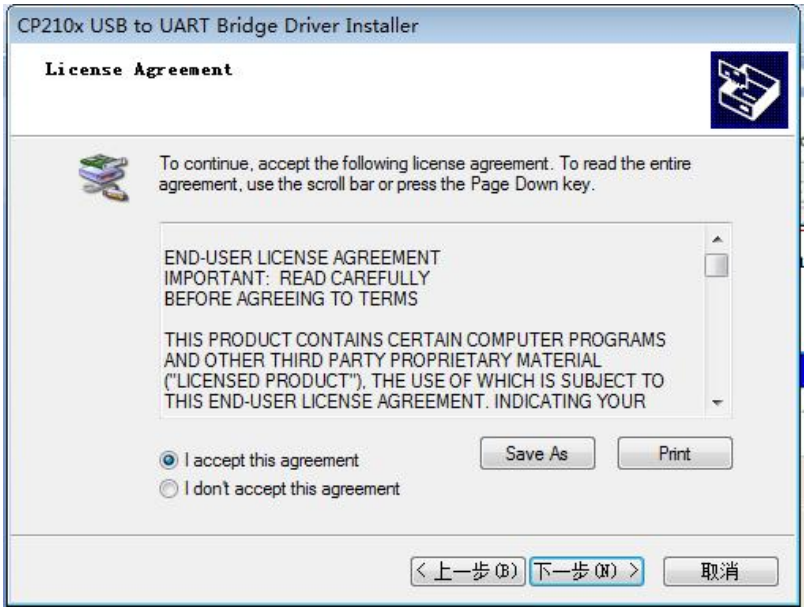

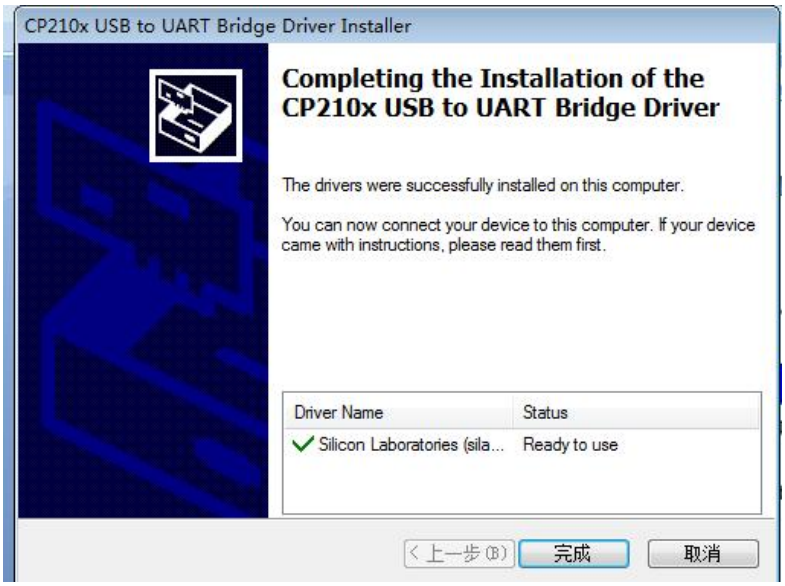

4.3 Upgrading with the FlashTool v0.6.9.1.exe

1、FlashTool is a green program needing no installation. After Connect the unit to your pc with a USB-to-serial port cable，run FlashTool v0.6.9.1.exe. Please refer to the following steps to set.

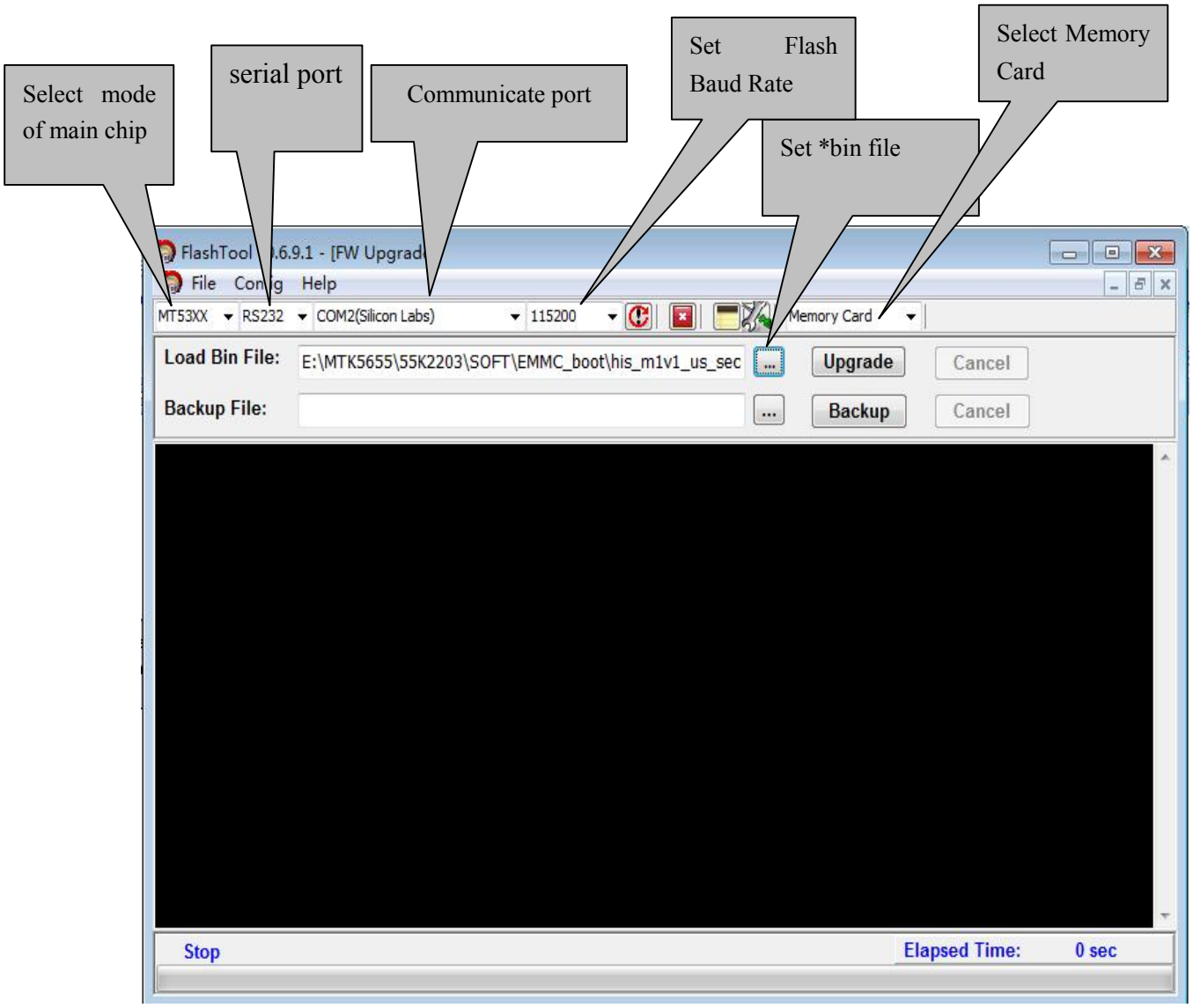

.

How to choose Communicate port and flash baud rate? See the following instruction..

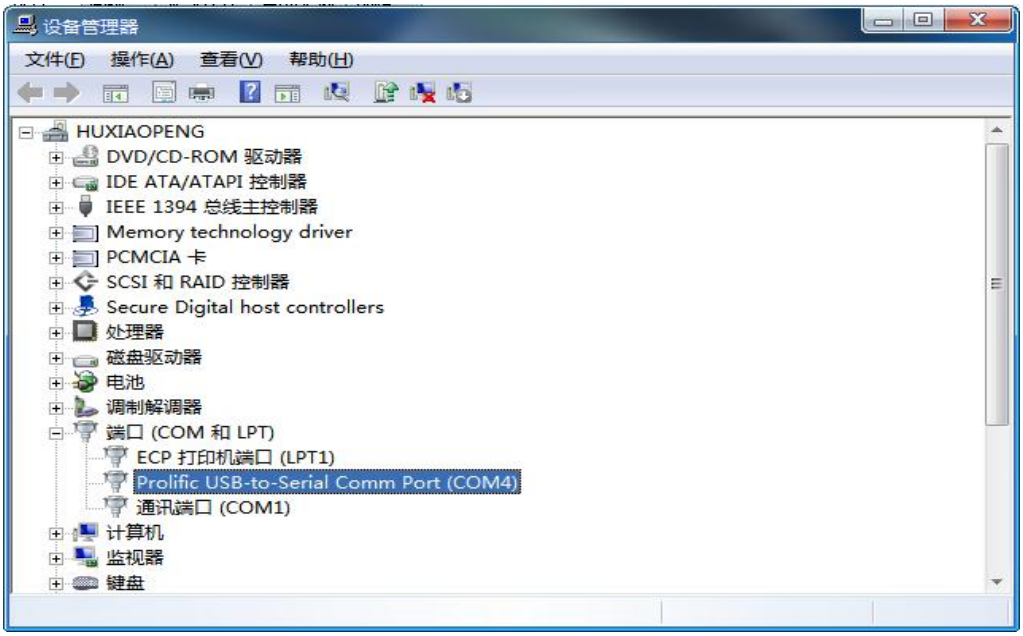

Open “Device Manager” and find which port is connected with the TV. In above picture, COM4 is connected to the TV, so, select “COM4” and if COM6 is connected to the TV, so select “COM6”. Select the right baud rate according to chip model. For this unit(chip model is MT5657), select 115200.

2、AC power on the TV ,then Click to connect，if connect successfully then button from red turn green.

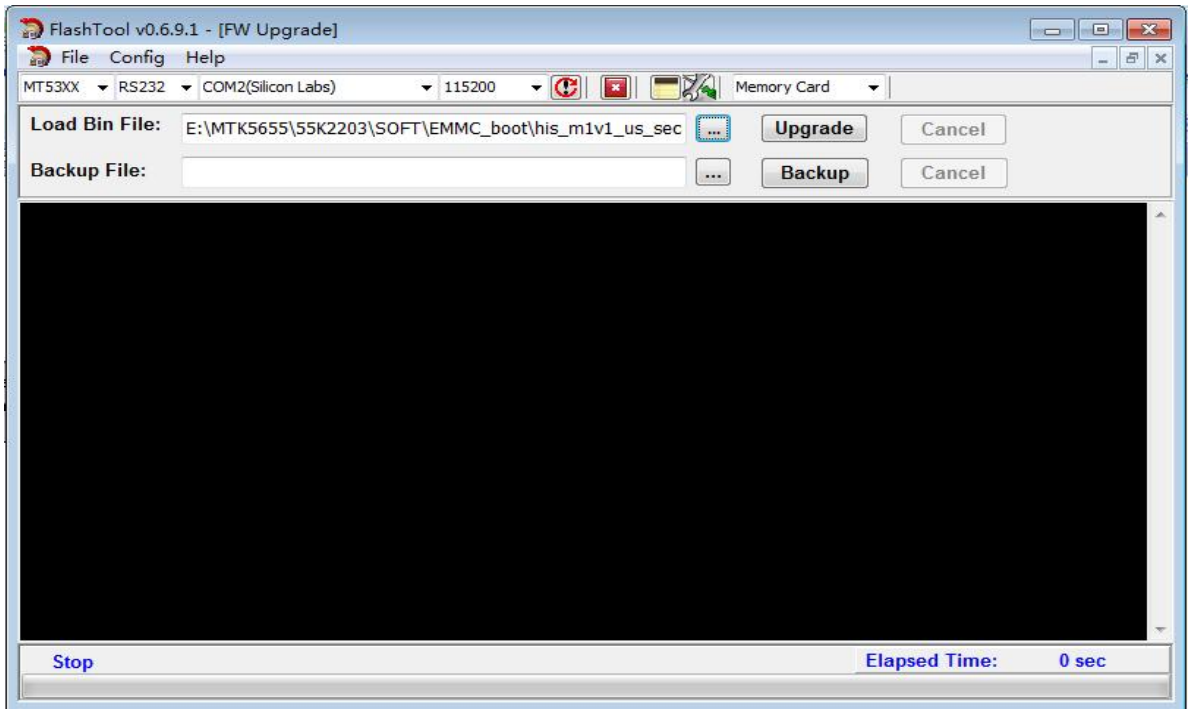

Click , bounce the following dialog box. Load Bin File：find the upgrading program file, his_m1v1_us_secure_emmcboot.bin.

Press “Upgrade” button and start upgrading.， if update defeat, try again.

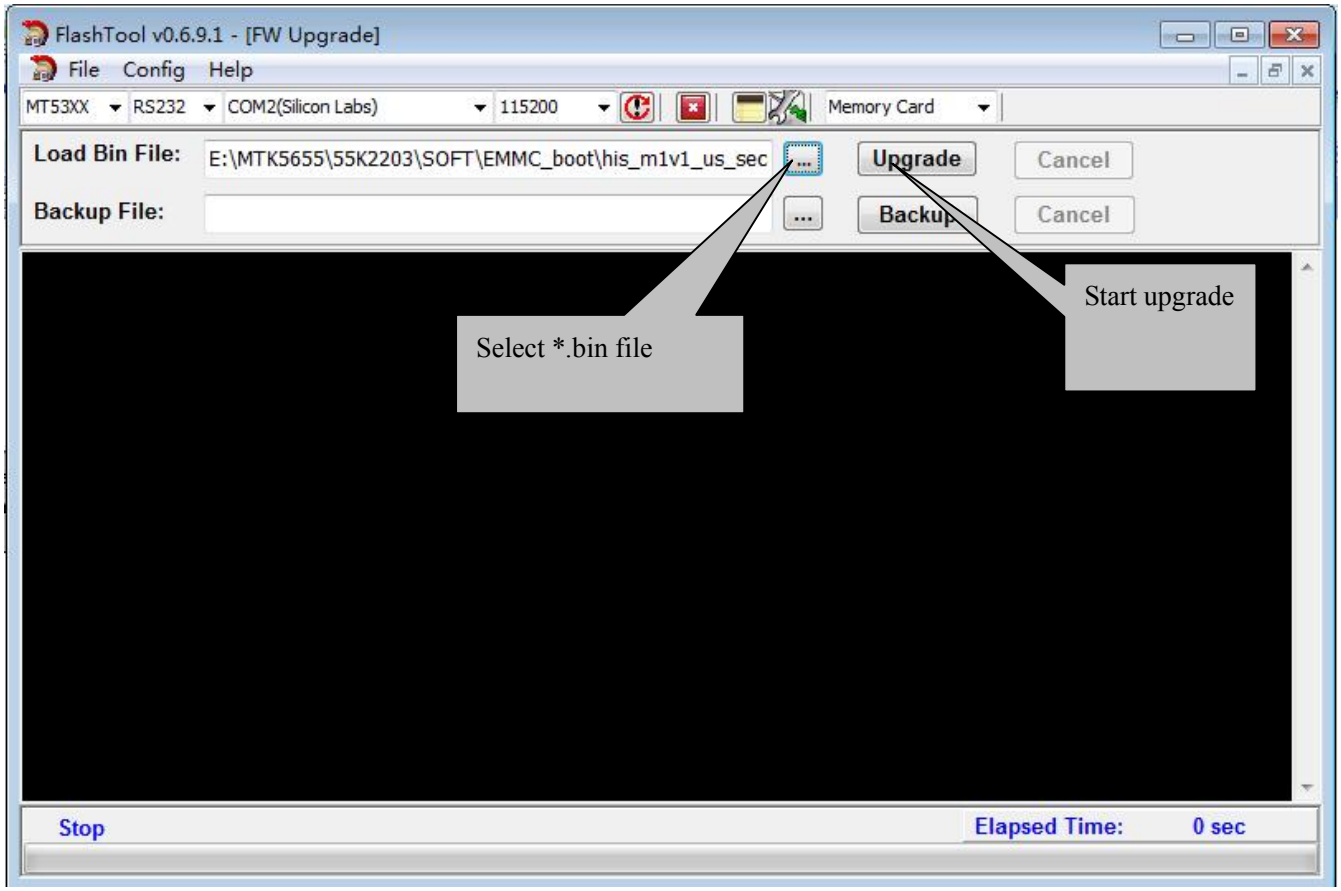

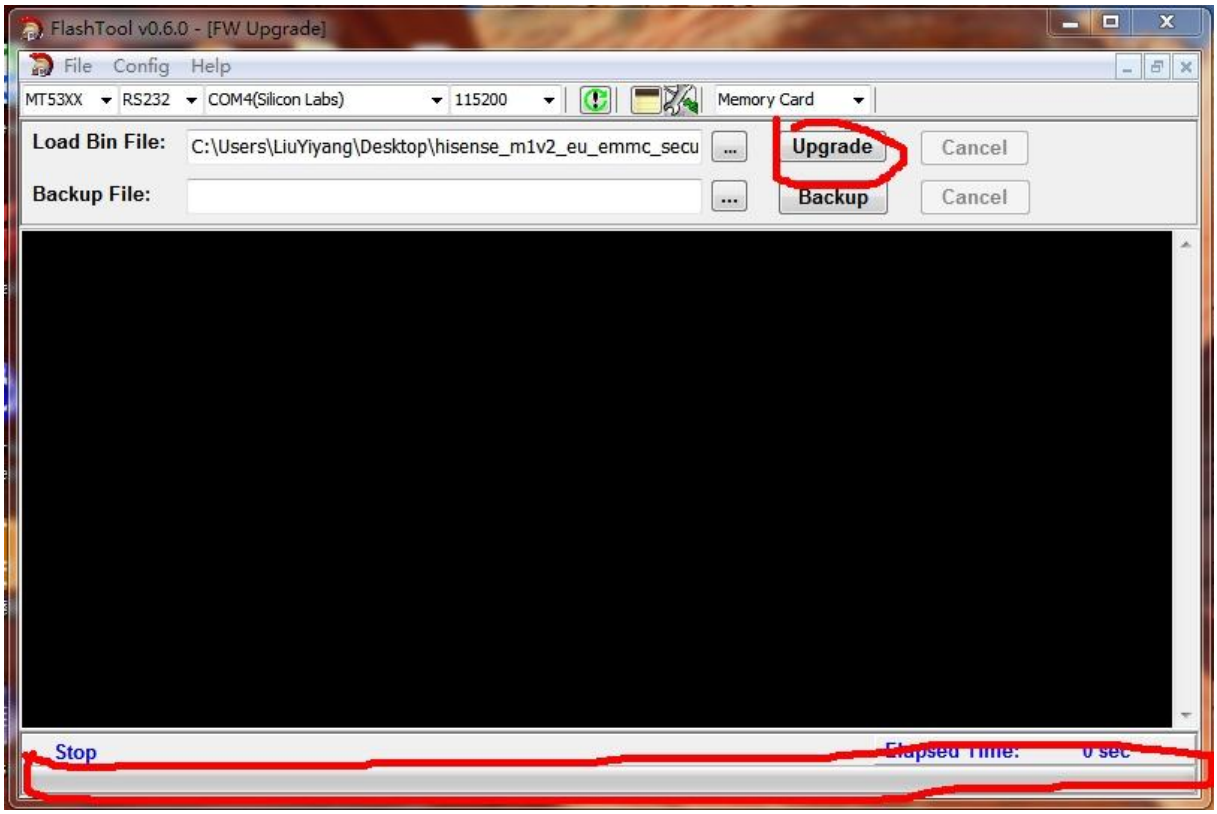
FlashTool v0.6.0 - [FW Upgrade]
File
Config
Help
MT53XX
RS232
COM4(Silicon Labs)
115200
Memory Card
Load Bin File:
C:\Users\LiuYiyang\Desktop\hisense_m1v2_eu_emmc_secu
Upgrade
Cancel
Backup File:
Backup
Cancel
Stop
Elapsed Time:
0 sec

5. Trouble shooting

When there is something wrong with your TV, you can try turning off the TV and then restart it. You can also operate according to the follow chart. If the problems still cann't be solved, please contact the profession technician.

No sound or picture	1. Check if the power line is in the outlet and if it has electricity. 2. Check if you have pressed Power button on the TV or Power button on the remote control 3. Check the setting of picture brightness and contrast. 4. Check the volume.
The picture is normal but there is no sound	1. Check the volume. 2. Check if Mute mode is set.
No picture and white or black picture	1. Adjust Picture Setting. 2. Check Color System.
The sound and picture are interfered	1 Try to find the appliance affecting TV set, and move it far away from the TV set. 2. Try to insert the power plug of the TV set into another outlet.
Unclear picture or picture with snow	1. Check the direction, position and connection of your antenna. 2. Adjust the direction of your antenna or reset or fine tune the channel
The remote control does not work	1. Change the batteries in the remote control. 2. Clean the upper side of the remote control (radiating window) 3. Check the contacting points of the batteries. 4. Check if there is obstruction between the remote control and the monitor. 5. Check if the batteries are correctly installed.
H/V strip or the picture shaking	Check if there is an interfering source nearby, such as appliance or electric tools.
The cabinet of the TV makes "Click" sound	makes "Click" sound"Sometimes the room temperature change can cause the television cabinet to inflate or contra, which makes this sound. This does not mean the TV breaks down.

5.1 Troubleshooting for Remote Control

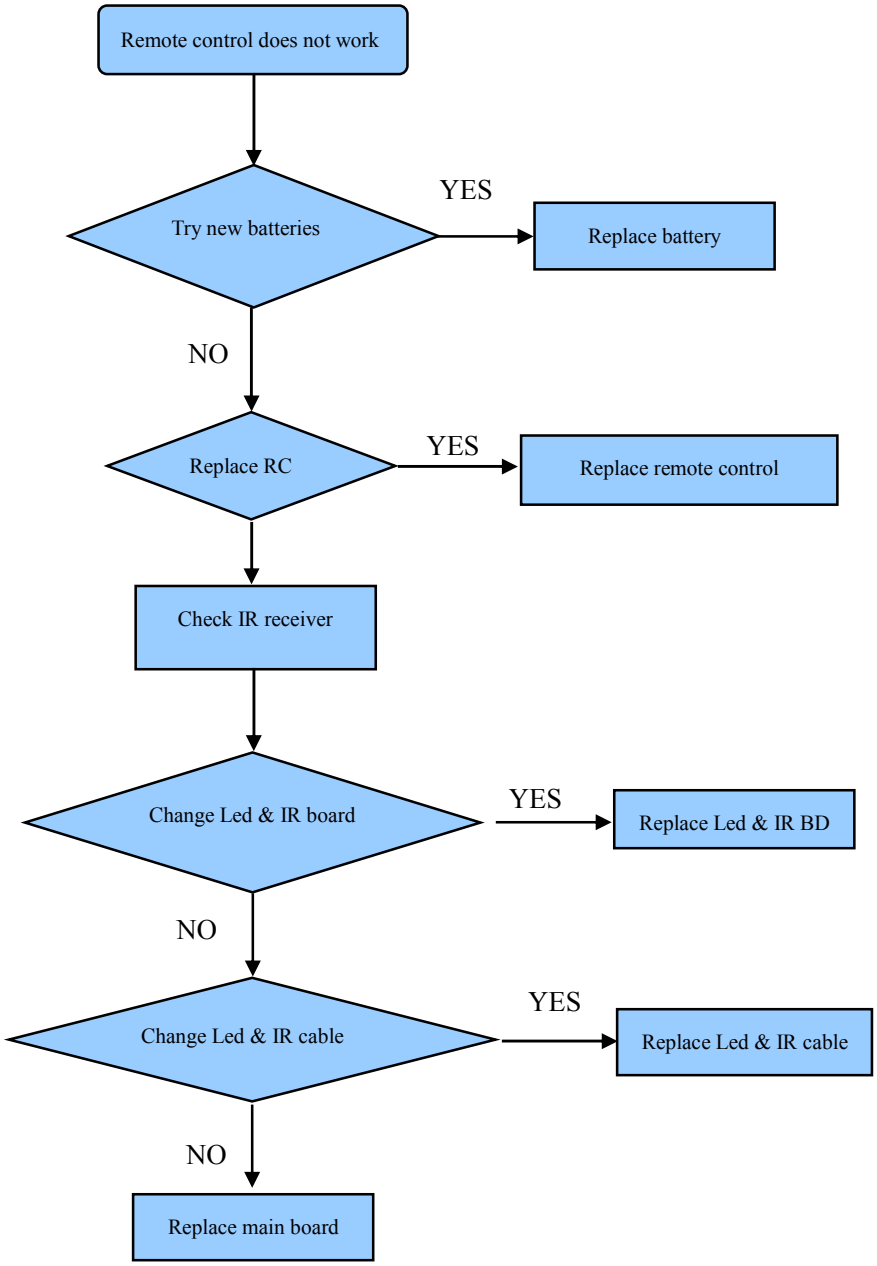

5.2 Troubleshooting for Function Key

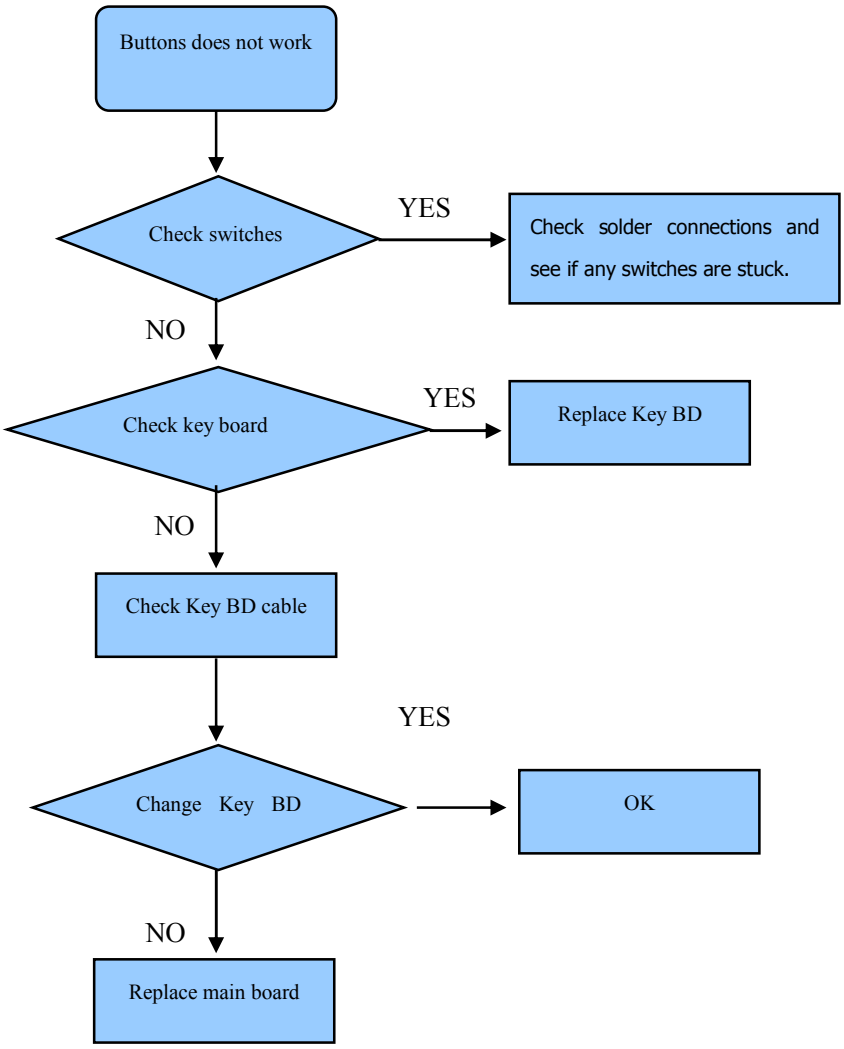

5.3 TV won't Power On

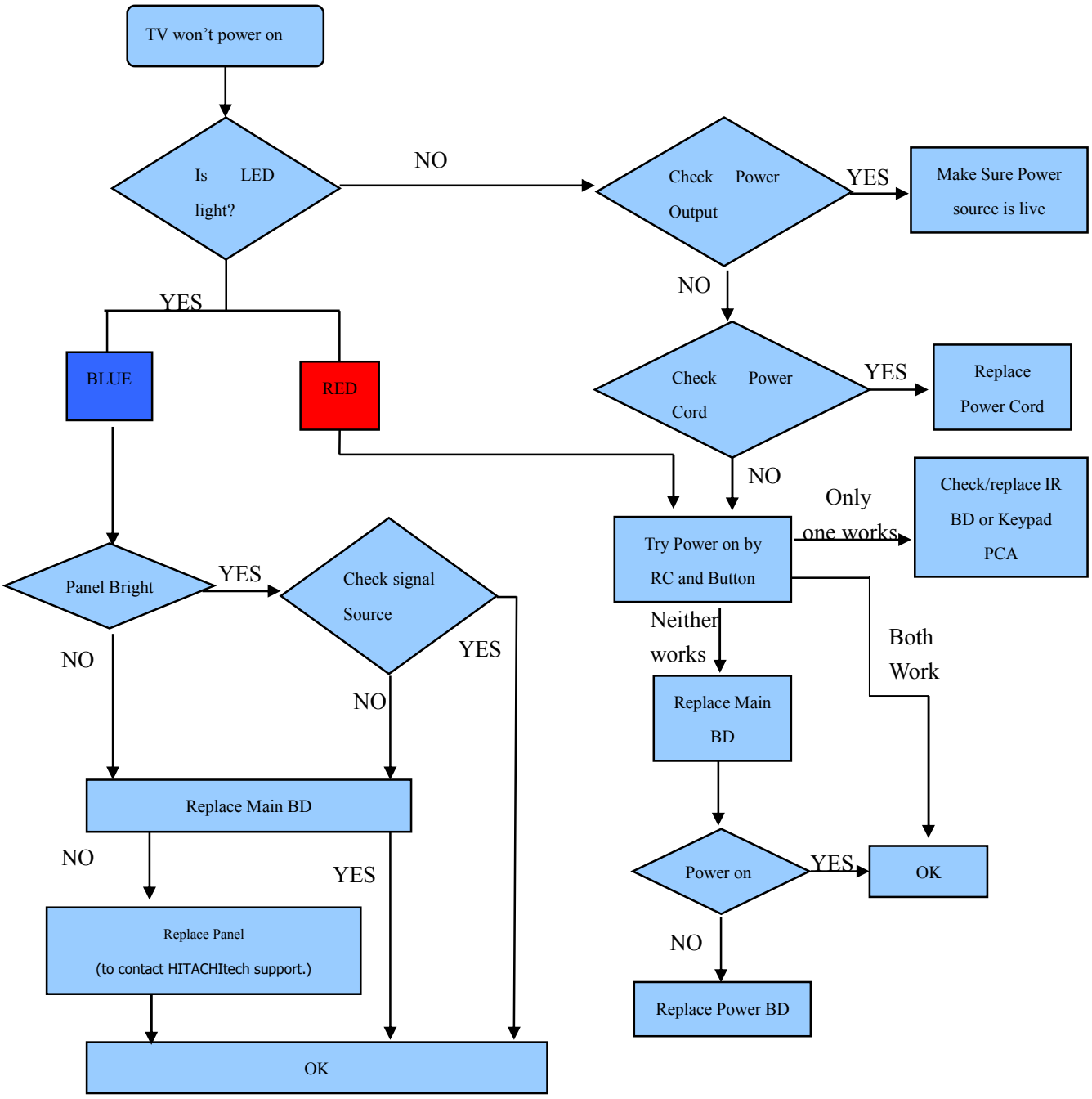

5.4 Troubleshooting for Audio

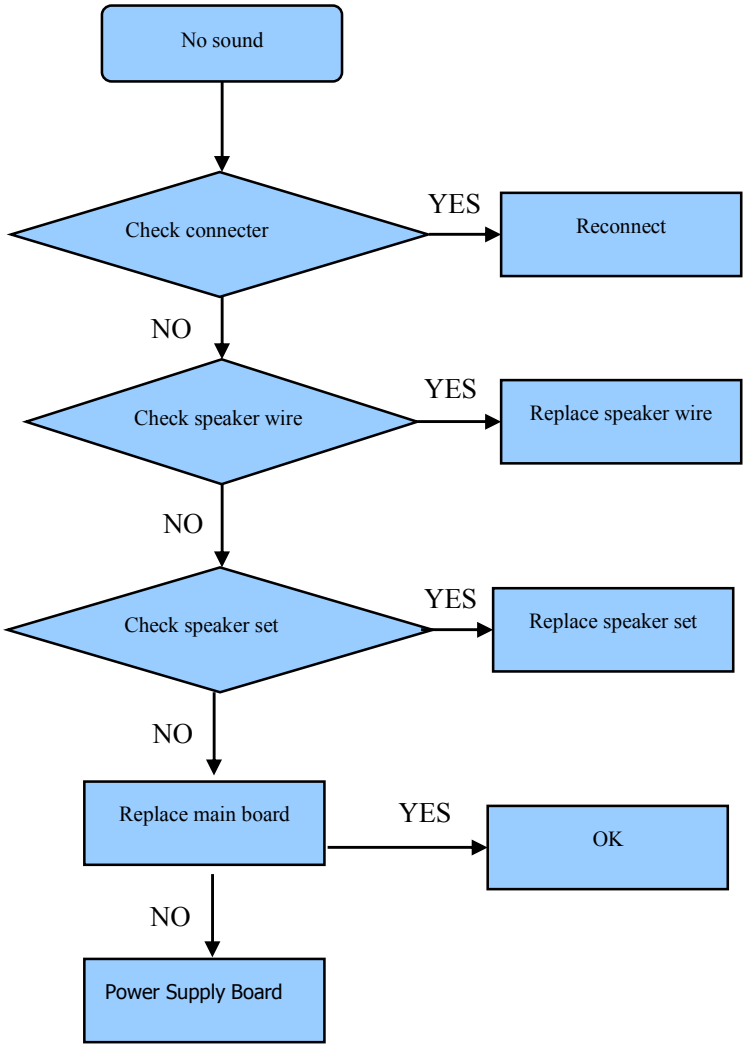

5.5 Troubleshooting for TV/VGA/HDMI input

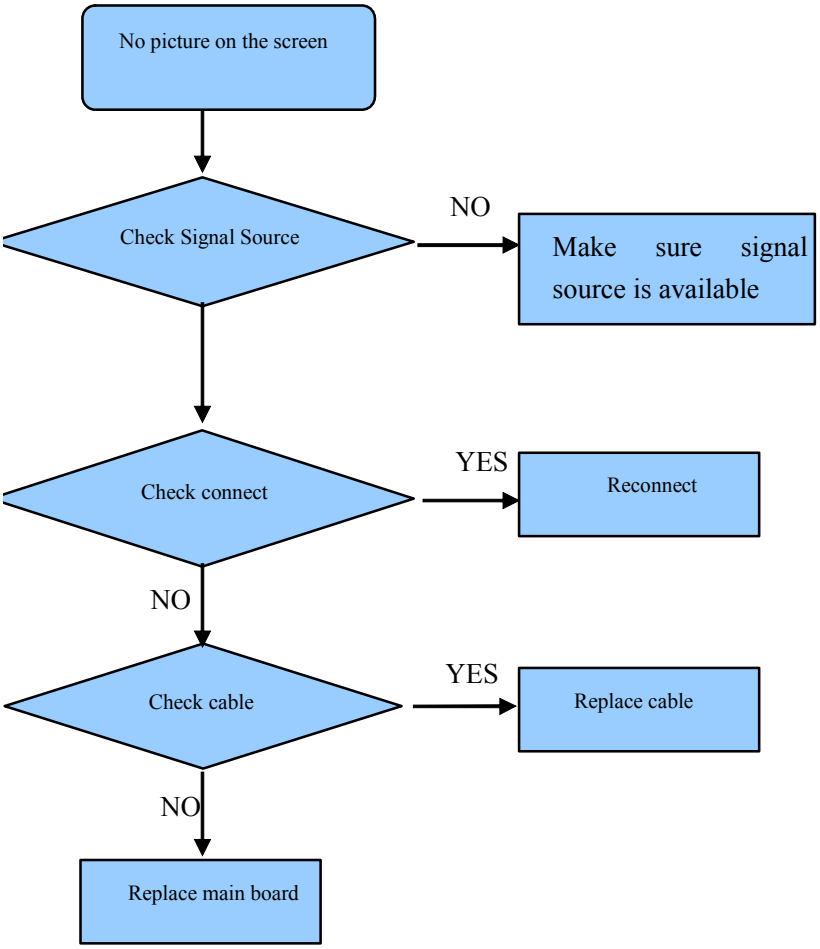

5.6 Troubleshooting for YPbPr input

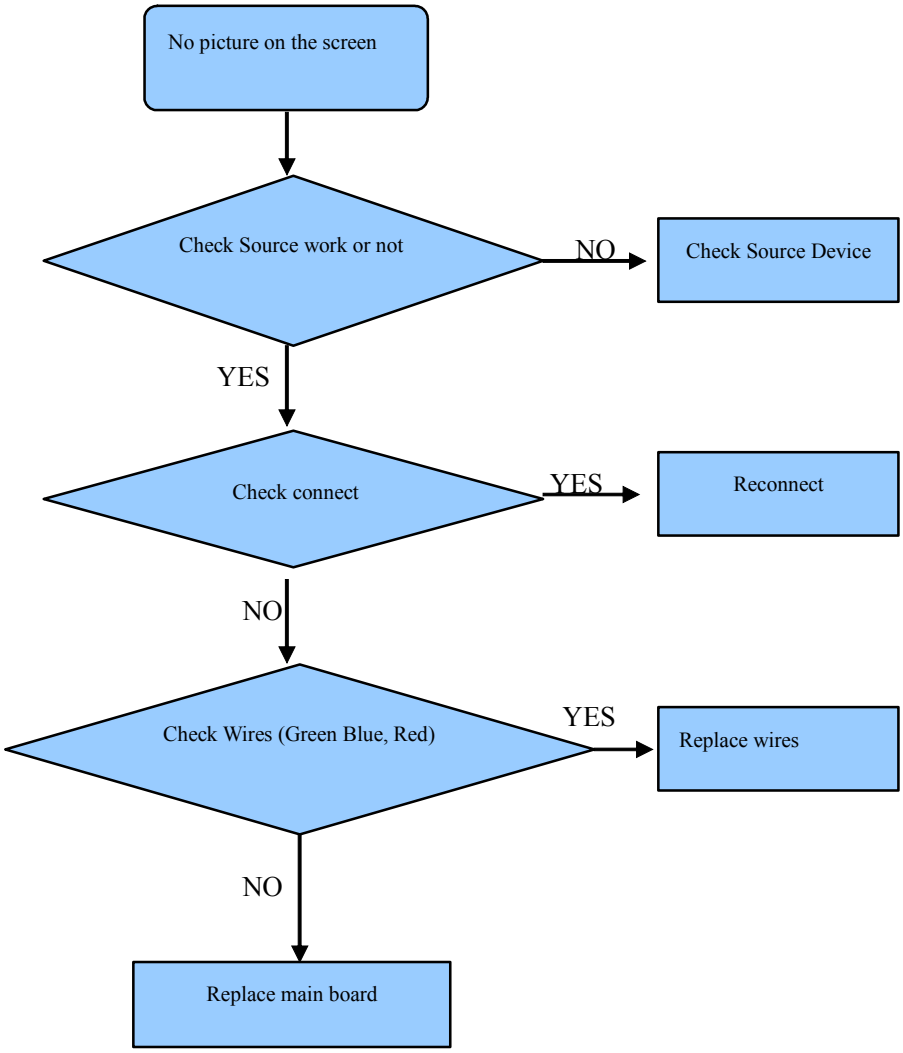

5.7 Troubleshooting for Video input

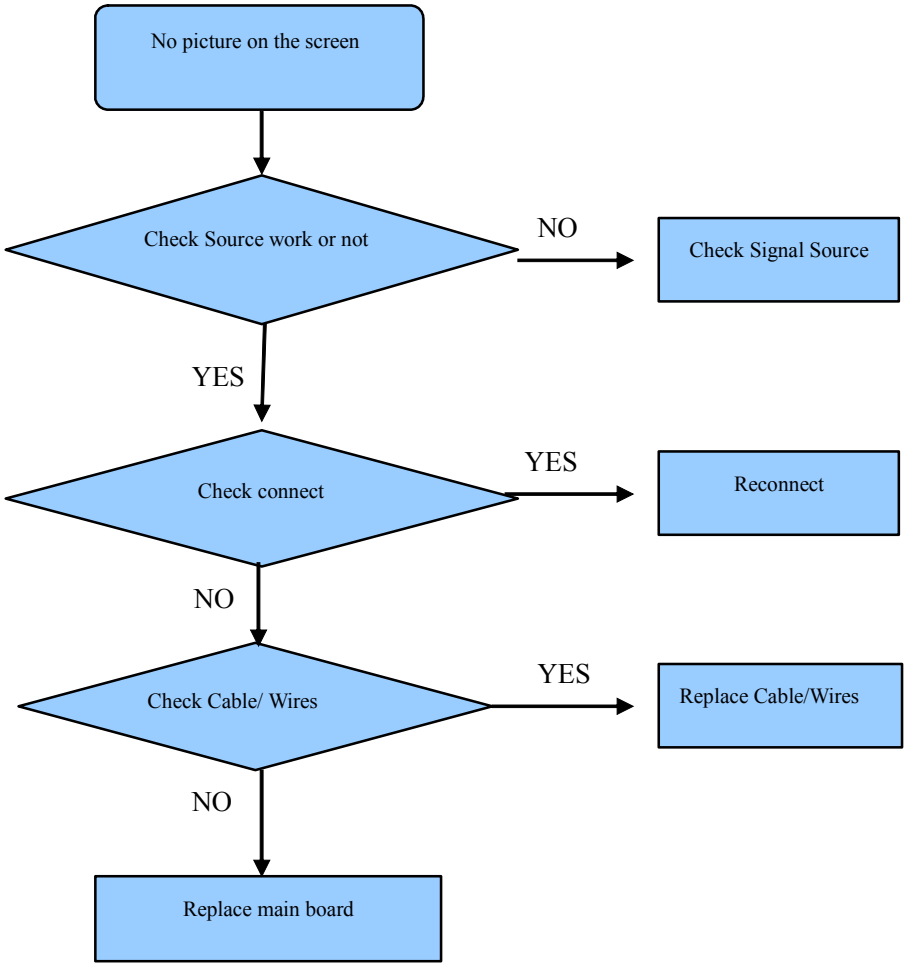

6. Signals Block Diagram and power assign:

7. Schematic circuit diagram

8. Explode View

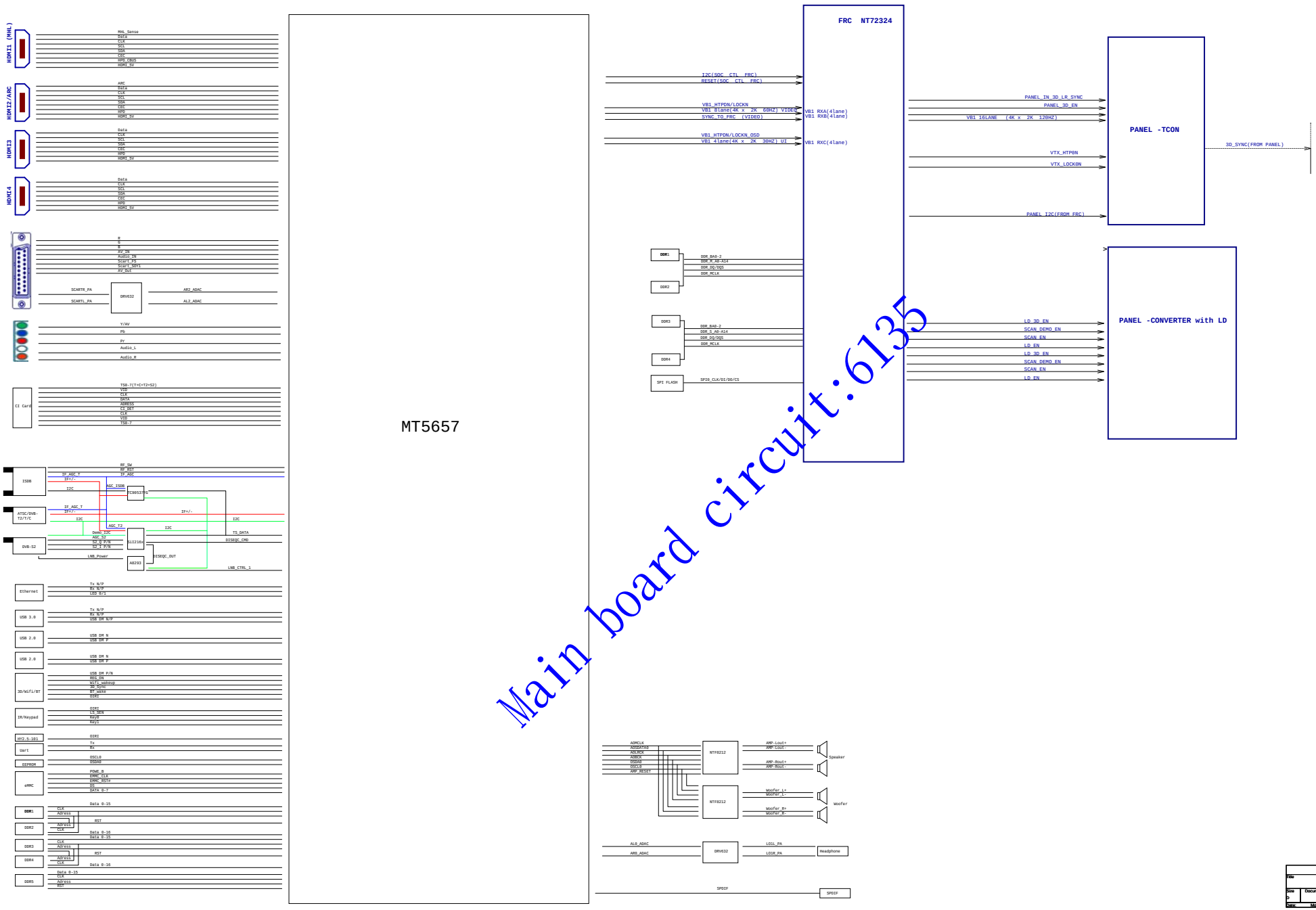

Main board circuit:6135

File	MT5657		
Size D	Document Number		Rev 1.0
Date: Monday, January 26, 2015	Sheet 2 of 22		

GPIO LIST

PIN NAME	Function Definition	GPIO Function
CI_A0	CI Interface	CI_A0 (GPIO_0)
CI_A1	CI Interface	CI_A1 (GPIO_1)
CI_A2	CI Interface	CI_A2 (GPIO_2)
CI_A3	CI Interface	CI_A3 (GPIO_3)
CI_A4	CI Interface	CI_A4 (GPIO_4)
CI_A5	CI Interface	CI_A5 (GPIO_5)
CI_A6	CI Interface	CI_A6 (GPIO_6)
CI_A7	CI Interface	CI_A7 (GPIO_7)
CI_A8	CI Interface	CI_A8 (GPIO_8)
CI_A9	CI Interface	CI_A9 (GPIO_9)
CI_A10	CI Interface	CI_A10 (GPIO_10)
CI_A11	CI Interface	CI_A11 (GPIO_11)
CI_A12	CI Interface	CI_A12 (GPIO_12)
CI_A13	CI Interface	CI_A13 (GPIO_13)
CI_A14	CI Interface	CI_A14 (GPIO_14)
CI_MCLKI	CI Interface	CI_MCLKI (GPIO_15)
CI_MIVAL	CI Interface	CI_MIVAL (GPIO_16)
CI_MISTRT	CI Interface	CI_MISTRT (GPIO_17)
CI_MDI0	CI Interface	CI_MDI0 (GPIO_18)
CI_MDI1	CI Interface	CI_MDI1 (GPIO_19)
CI_MDI2	CI Interface	CI_MDI2 (GPIO_20)
CI_MDI3	CI Interface	CI_MDI3 (GPIO_21)
CI_MDI4	CI Interface	CI_MDI4 (GPIO_22)
CI_MDI5	CI Interface	CI_MDI5 (GPIO_23)
CI_MDI6	CI Interface	CI_MDI6 (GPIO_24)
CI_MDI7	CI Interface	CI_MDI7 (GPIO_25)
CI_D0	CI Interface	CI_D0 (GPIO_26)
CI_D1	CI Interface	CI_D1 (GPIO_27)
CI_D2	CI Interface	CI_D2 (GPIO_28)
CI_D3	CI Interface	CI_D3 (GPIO_29)
CI_D4	CI Interface	CI_D4 (GPIO_30)
CI_D5	CI Interface	CI_D5 (GPIO_31)
CI_D6	CI Interface	CI_D6 (GPIO_32)
CI_D7	CI Interface	CI_D7 (GPIO_33)
CI_MDO0	CI Interface	CI_MDO0 (GPIO_34)
CI_MDO1	CI Interface	CI_MDO1 (GPIO_35)
CI_MDO2	CI Interface	CI_MDO2 (GPIO_36)
CI_MDO3	CI Interface	CI_MDO3 (GPIO_37)
CI_MDO4	CI Interface	CI_MDO4 (GPIO_38)
CI_MDO5	CI Interface	CI_MDO5 (GPIO_39)
CI_MDO6	CI Interface	CI_MDO6 (GPIO_40)
CI_MDO7	CI Interface	CI_MDO7 (GPIO_41)
GPIO_42	CI Over Current Protect	CI_OCP
GPIO_43	USB Power Enable	USB_PWR_EN1
GPIO_44	USB Power Enable	USB_PWR_EN2
GPIO_45	—	—
GPIO_46	SYSTEM EEPROM write protect	SYS_EEPROM_WP
GPIO_47	CI Interface	CI_RESET
GPIO_48	CI POWER CONTROL	CI_POWER_EN
GPIO_49	—	—
GPIO_50	VB1	VB1_REQ
GPIO_51	—	—
GPIO_52	—	—
GPIO_53	VB1	VB1_HTPDN_OSD
GPIO_54	VB1	VB1_LOCKN_OSD
GPIO_55	—	—
GPIO_56	JTAG	JTDO
GPIO_57	JTAG	JTCK
GPIO_58	JTAG	JTMS
GPIO_59	JTAG	JTDI
GPIO_60	JTAG	JTRST#
GPIO_61	—	—
GPIO_62	—	—
GPIO_63	SDIO POWER CONTROL	SDIO_PWR_CTRL
GPIO_64	—	—
GPIO_65	—	—
GPIO_66	USB Power Enable	USB_PWR_EN0

PCBA version ID

PIN NAME	Function define	GPIO Function
ADIN0_SRV	Function Select	SCART_FS
ADIN1_SRV	KEY_PAD	KEY_PAD0
ADIN2_SRV	KEY_PAD	KEY_PAD1
ADIN3_SRV	MHL Over Current Protect	USB_MHL_OC
ADIN4_SRV	USB over current detect	USB_OC_P0/P1
ADIN5_SRV	USB over current detect	USB_OC_P2/P3
ADIN6_SRV	Demod	RF AGCI
ADIN7_SRV	SD Card Detect	SD_DET
ADIN8_SRV	—	—
ADIN9_SRV	—	—

PIN NAME	Function define	GPIO Function
OPWM0	—	—
OPWM1	Backlight DIMMING	BL_DIMMING
OPWM2	LNA_AGC switch	LNASW_AGCSW
OPWM3	—	—
OPWM4	—	—
OPWM5	—	—
OPWM6	—	—
OPWM7	—	—
OPWM8	—	—

PIN NAME	Function define	GPIO Function
LED_PWM0	Strapping / Standby mode LED	Strap[3] / LED_PWM0
LED_PWM1	Strapping / Power On LED	Strap[2] / LED_PWM1
LED_PWM2	Strapping	Strap[1]
LED_PWM3	—	—

PIN NAME	Function define	GPIO Function
OPCTRL0	PHY LED	PHYLED2
OPCTRL1	PHY LED	PHYLED3
OPCTRL2	SCART	AV_LINK
OPCTRL3	Fast Boot Control	FB_PWR_CTRL
OPCTRL4	Backlight Control	BL_ON/OFF
OPCTRL5	PWM AMP MUTE	AMP_MUTE
OPCTRL6	Headphone Detect	HP_DET
OPCTRL7	—	—
OPCTRL8	MHL_PWR_EN	MHL_PWR_EN
OPCTRL9	LVDS Power Control	LVDS_PWR_EN
OPCTRL10	USB Power Enable	USB_PWR_EN3
OPCTRL11	Audio Mute Control	MUTE_CTL

Main board circuit 0135

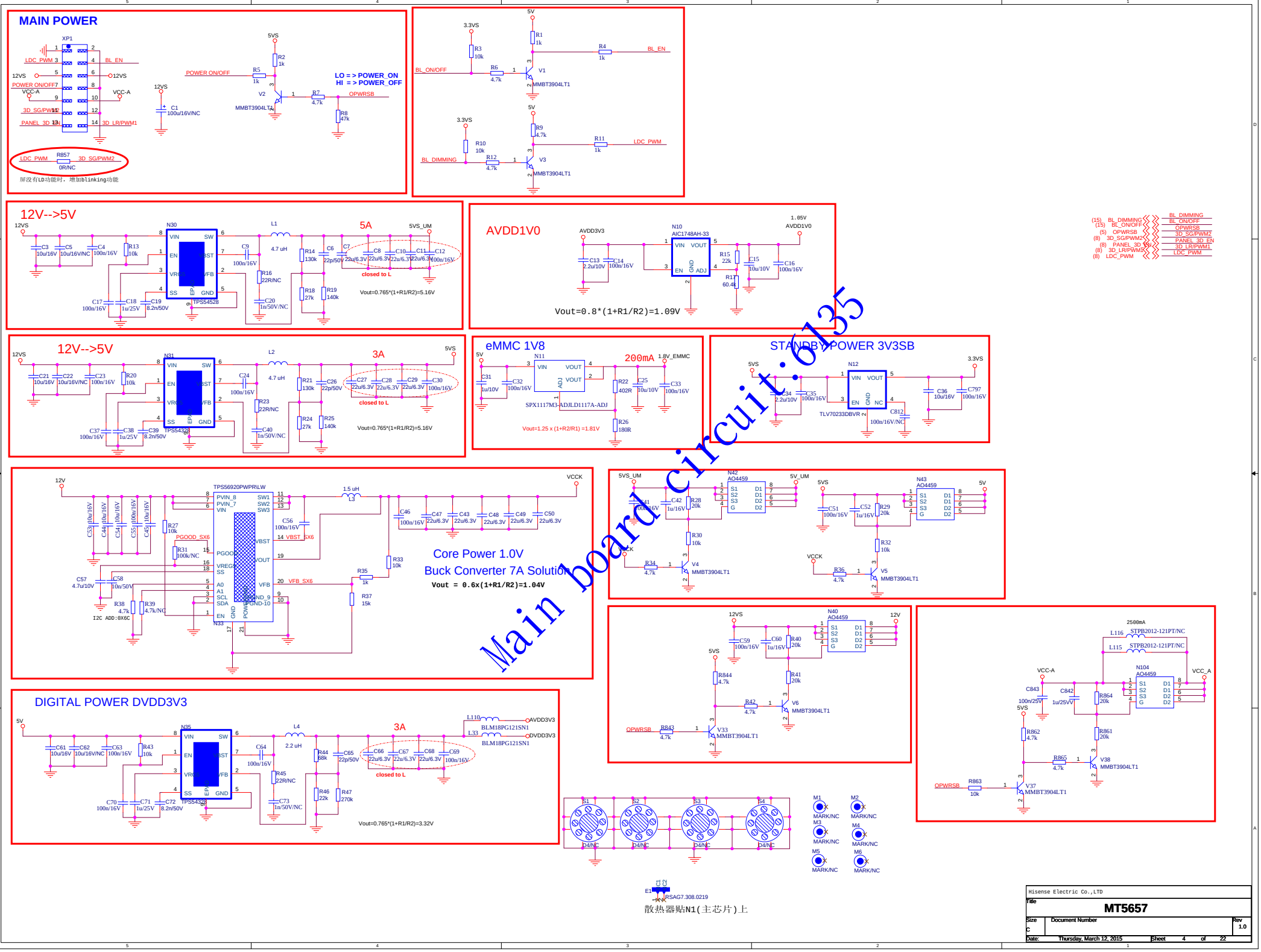
MAIN POWER
XP1
LDC_PWM
BL_EN
12VS
POWER ON/OFF
VCC-A
3D_SG/PWM2
PANEL_3D_EN
3D_LR/PWM1
R857
0R/NC
屏没有LD功能时，增加blinking功能
POWER ON/OFF
R5 1k
R2 1k
V2 MMBT3904LT1
R7 4.7k
OPWRSB
R8 47k
C1 100u/16V/NC
LO = > POWER_ON
HI = > POWER_OFF
3.3VS
R3 10k
R1 1k
R4 1k
BL_ON/OFF
R6 4.7k
V1 MMBT3904LT1
R9 4.7k
R11 1k
R10 10k
BL_DIMMING
R12 4.7k
V3 MMBT3904LT1
12V-->5V
N30
TPS54528
L1 4.7 uH
5A
5VS_UM
closed to L
Vout=0.765*(1+R1/R2)=5.16V
AVDD1V0
N10 AIC1748AH-33
1.05V
Vout=0.8*(1+R1/R2)=1.09V
12V-->5V
N31
TPS54328
L2 4.7 uH
3A
5VS
closed to L
Vout=0.765*(1+R1/R2)=5.16V
eMMC 1V8
N11 SPX1117M3-ADJLD1117A-ADJ
200mA
1.8V_EMMC
Vout=1.25 x (1+R2/R1) =1.81V
STANDBY POWER 3V3SB
N12 TLV70233DBVR
3.3VS
Core Power 1.0V
Buck Converter 7A Solution
Vout = 0.6x(1+R1/R2)=1.04V
TPS56920PWPRLW
1.5 uH
VCCK
PGOOD_SX6
VBST_SX6
VFB_SX6
I2C ADD:0X6C
N42 AO4459
N43 AO4459
V4 MMBT3904LT1
V5 MMBT3904LT1
N40 AO4459
V6 MMBT3904LT1
V33 MMBT3904LT1
N104 AO4459
V38 MMBT3904LT1
V37 MMBT3904LT1
2500mA
STPB2012-121PT/NC
DIGITAL POWER DVDD3V3
N35
TPS54328
L4 2.2 uH
3A
closed to L
Vout=0.765*(1+R1/R2)=3.32V
AVDD3V3
DVDD3V3
BLM18PG121SN1
D4/NC
MARK/NC
RSAG7.308.0219
散热器贴N1(主芯片)上
Hisense Electric Co.,LTD
Title
MT5657
Size
C
Document Number
Rev
1.0
Date: Thursday, March 12, 2015
Sheet 4 of 22
Main board circuit:6135

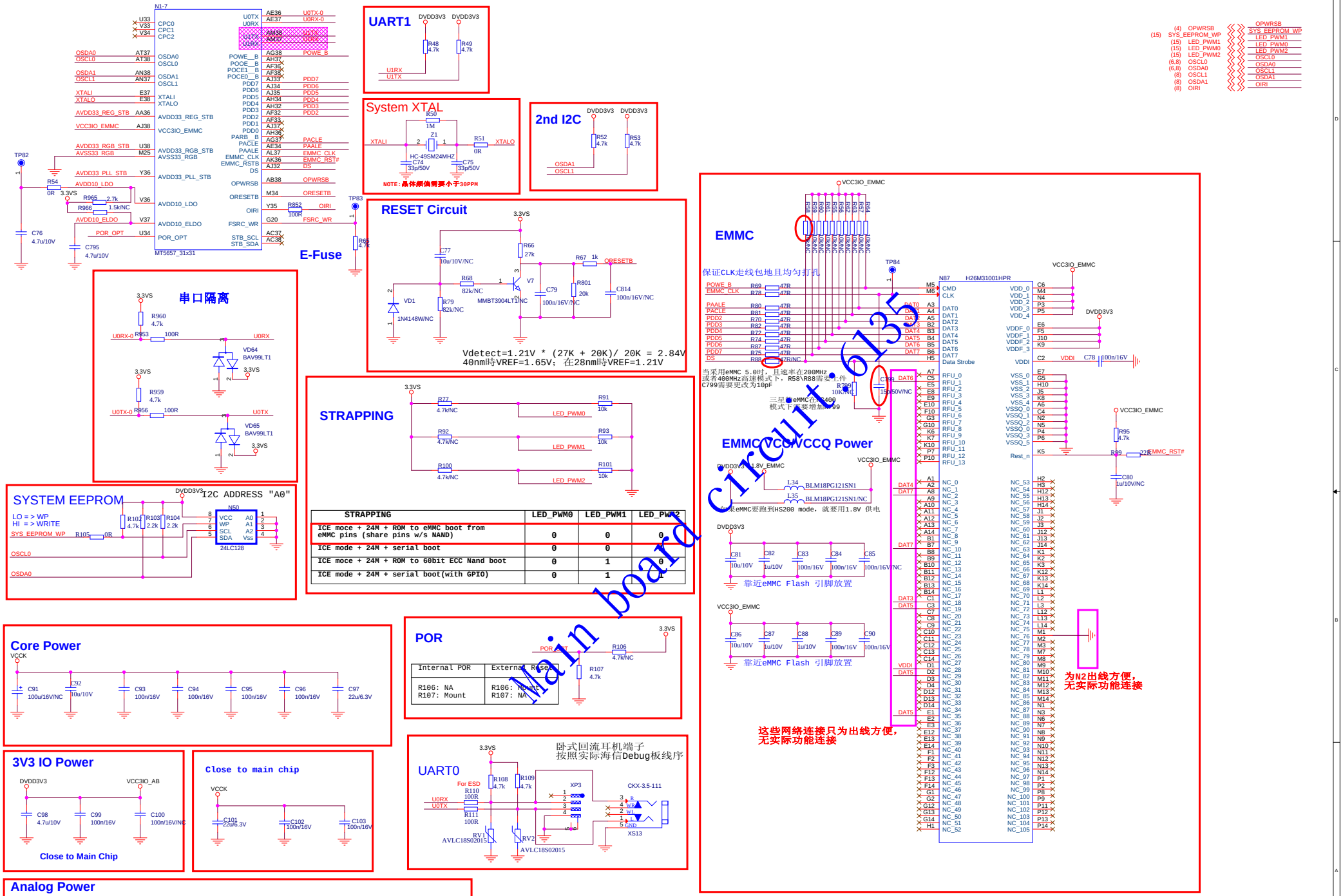

STRAPPING	LED_PWM0	LED_PWM1	LED_PWM2
ICE moce + 24M + ROM to eMMC boot from eMMC pins (share pins w/s NAND)	0	0	0
ICE mode + 24M + serial boot	0	0	1
ICE moce + 24M + ROM to 60bit ECC Nand boot	0	1	0
ICE mode + 24M + serial boot(with GPIO)	0	1	1

Internal POR	External Reset
R106: NA R107: Mount	R106: Mount R107: NA

Hisense Electric Co.,LTD

Title: MT5657

Size: C | Document Number | Rev: 1.0

Date: Tuesday, March 03, 2015 | Sheet 5 of 22

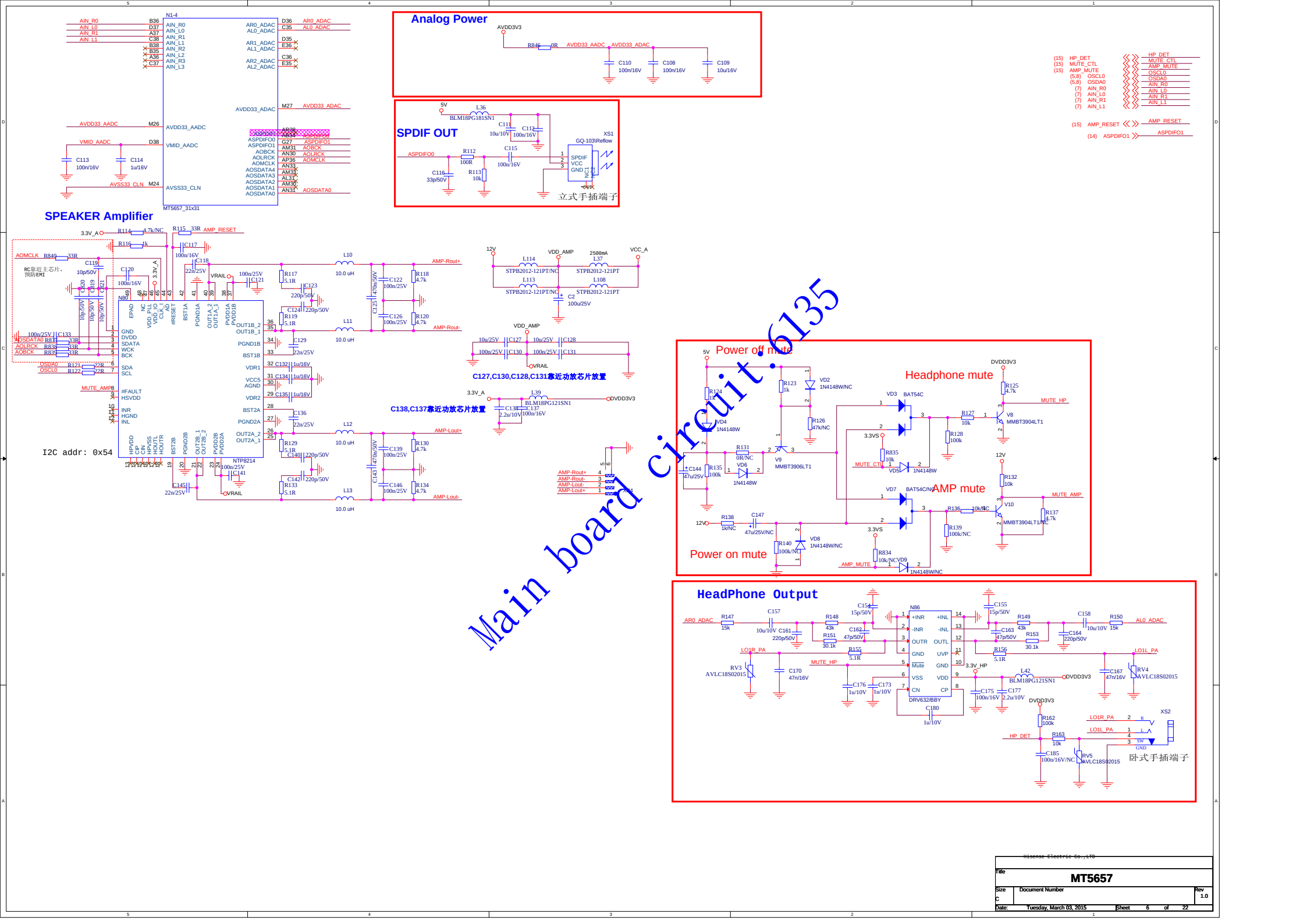
Analog Power
AVDD3V3
R846 0R
AVDD33_AADC
C110 100n/16V
C108 100n/16V
C109 10u/16V
SPDIF OUT
5V
L36 BLM18PG181SN1
C111 10u/10V
C112 100n/16V
C115 100n/16V
R112 100R
R113 10k
C116 33p/50V
ASPDIFO0
XS1 GQ-103\Reflow
SPDIF VCC GND
立式手插端子
N1-4
MT5657_31x31
AIN_R0 B36
AIN_L0 D37
AIN_R1 A37
AIN_L1 C38
AR0_ADAC C35
AL0_ADAC
AR1_ADAC
AL1_ADAC
AR2_ADAC
AL2_ADAC
AVDD33_ADAC M27
AVDD33_AADC M26
VMID_AADC D38
C113 100n/16V
C114 1u/16V
AVSS33_CLN M24
ASPDIFO0 G27 ASPDIFO1
AM31 AOBCK
AN30 AOLRCK
AP36 AOMCLK
AOSDATA4
AOSDATA3
AOSDATA2
AOSDATA1
AOSDATA0 AN31
HP_DET
MUTE_CTL
AMP_MUTE
OSCL0
OSDA0
AIN_R0
AIN_L0
AIN_R1
AIN_L1
AMP_RESET
ASPDIFO1
SPEAKER Amplifier
3.3V_A
R114 4.7k/NC
R115 33R AMP_RESET
R116 1k
C117 100n/16V
C118 22n/25V
AOMCLK R840 33R
C119 10p/50V
C120 100n/16V
VRAIL
100n/25V C121
N80
EPAD
GND
DVDD
SDATA
WCK
BCK
SDA
SCL
#FAULT
HSVDD
INR
HGND
INL
OUT1B_2
OUT1B_1
PGND1B
BST1B
VDR1
VCC5
AGND
VDR2
BST2A
PGND2A
OUT2A_2
OUT2A_1
NTP8214
R117 5.1R
C123 220p/50V
C124 220p/50V
R119 5.1R
C129 22n/25V
C132 1u/16V
C134 1u/16V
C135 1u/16V
C136 22n/25V
R129 5.1R
C140 220p/50V
C142 220p/50V
R133 5.1R
L10 10.0 uH
L11 10.0 uH
L12 10.0 uH
L13 10.0 uH
C122 100n/25V
C126 100n/25V
C139 100n/25V
C146 100n/25V
R118 4.7k
R120 4.7k
R130 4.7k
R134 4.7k
AMP-Rout+
AMP-Rout-
AMP-Lout+
AMP-Lout-
I2C addr: 0x54
C133 100n/25V
AOSDATA0 R837 33R
AOLRCK R838 33R
AOBCK R839 33R
OSDA0 R121 22R
OSCL0 R122 22R
MUTE_AMP
C145 22n/25V
12V
VDD_AMP
2500mA
VCC_A
L114 STPB2012-121PT/NC
STPB2012-121PT
L113 STPB2012-121PT/NC
L108 STPB2012-121PT
C2 100u/25V
C127,C130,C128,C131靠近功放芯片放置
C138,C137靠近功放芯片放置
3.3V_A
L39 BLM18PG121SN1
DVDD3V3
C138 2.2u/10V
C137 100n/16V
Power off mute
Power on mute
Headphone mute
AMP mute
VD2 1N4148W/NC
VD4 1N4148W
VD6 1N4148W
VD8 1N4148W/NC
VD9 1N4148W/NC
VD3 BAT54C
VD7 BAT54C/NC
VD5 1N4148W
V9 MMBT3906LT1
V8 MMBT3904LT1
V10 MMBT3904LT1/NC
R124 1k
R123 1k
R126 47k/NC
R131 0R/NC
R135 100k
R138 1k/NC
C147 47u/25V/NC
R140 100k/NC
R127 10k
R128 100k
R125 4.7k
R132 10k
R136 10k/NC
R137 4.7k
R139 100k/NC
R835 10k
R834 10k/NC
C144 47u/25V
3.3VS
MUTE_HP
MUTE_CTL
MUTE_AMP
AMP_MUTE
HeadPhone Output
AR0_ADAC
AL0_ADAC
R147 15k
C157 10u/10V
C161 220p/50V
R148 43k
R151 30.1k
C162 47p/50V
C154 15p/50V
R155 5.1R
LO1R_PA
LO1L_PA
MUTE_HP
RV3 AVLC18S02015
C170 47n/16V
C176 1u/10V
C173 1u/10V
N86
+INR
-INR
OUTR
GND
Mute
VSS
CN
+INL
-INL
OUTL
UVP
GND
VDD
CP
DRV632/BBY
C180 1u/10V
C155 15p/50V
C163 47p/50V
R149 43k
R153 30.1k
R156 5.1R
C175 100n/16V
C177 2.2u/10V
3.3V_HP
L42 BLM18PG121SN1
DVDD3V3
C158 10u/10V
R150 15k
C164 220p/50V
C167 47n/16V
RV4 AVLC18S02015
DVDD3V3
R162 100k
HP_DET
R163 10k
C185 100n/16V/NC
RV5 AVLC18S02015
XS2
卧式手插端子
Main board circuit 6135
Title
MT5657
Size C
Document Number
Rev 1.0
Date: Tuesday, March 03, 2015
Sheet 6 of 22

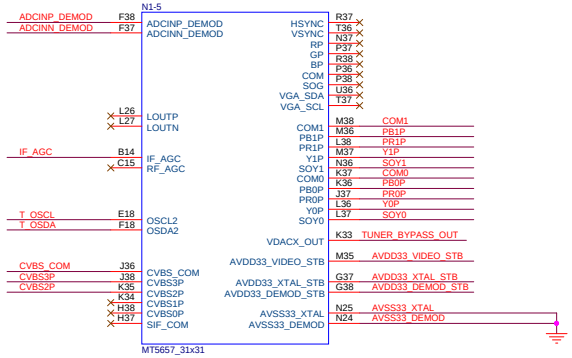

Analog Power 3V3

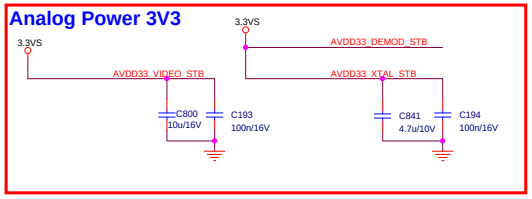

Close to Main Chip

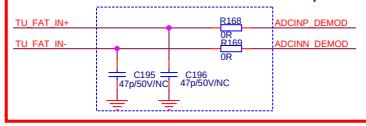

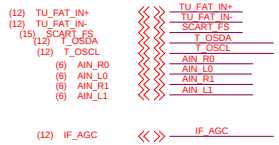

SCART (Full SCART) ---AV+RGB+AV OUT

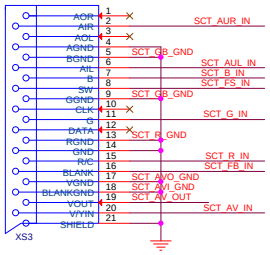

立式回流端子

FAST BLANKING/SOY

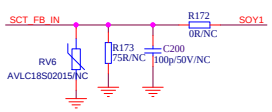

Function Select

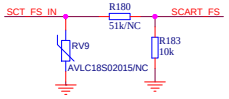

CVBS OUT(调试射频通道预留，调试时增加R196，默认不上件)

Close to Main Chip / Close to CONNECTOR

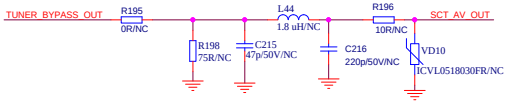

SCART INPUT

CVBS IN

Close to CONNECTOR / Close to Main Chip

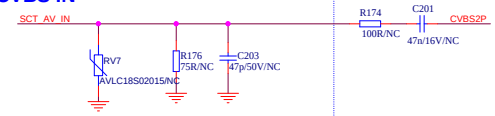

RGB IN

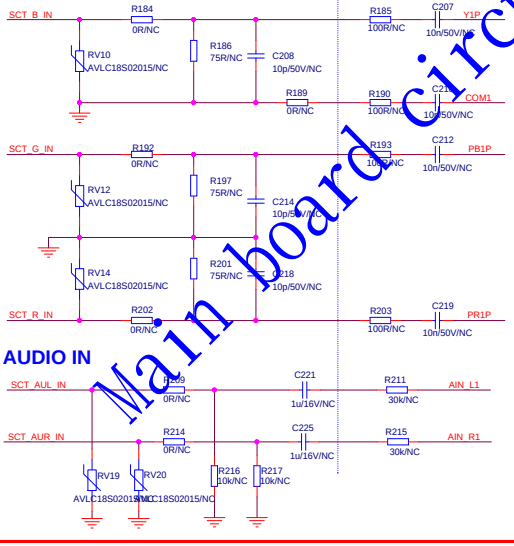

AUDIO IN

AV INPUT+L/R

Close to CONNECTOR / Close to Main Chip

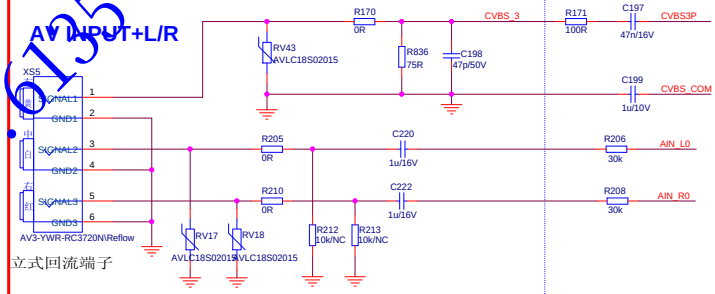

立式回流端子

YPbPr IN

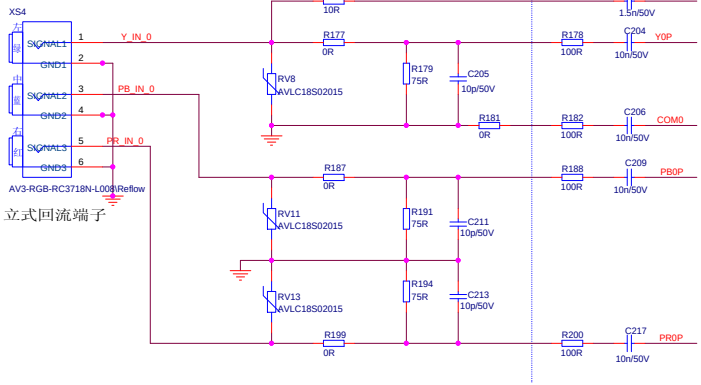

立式回流端子

Main board circuit.6125

Hisense Electric Co.,LTD			
Title	MT5657		
Size C	Document Number		Rev 1.0
Date: Monday, January 26, 2015	Sheet 7 of 22		

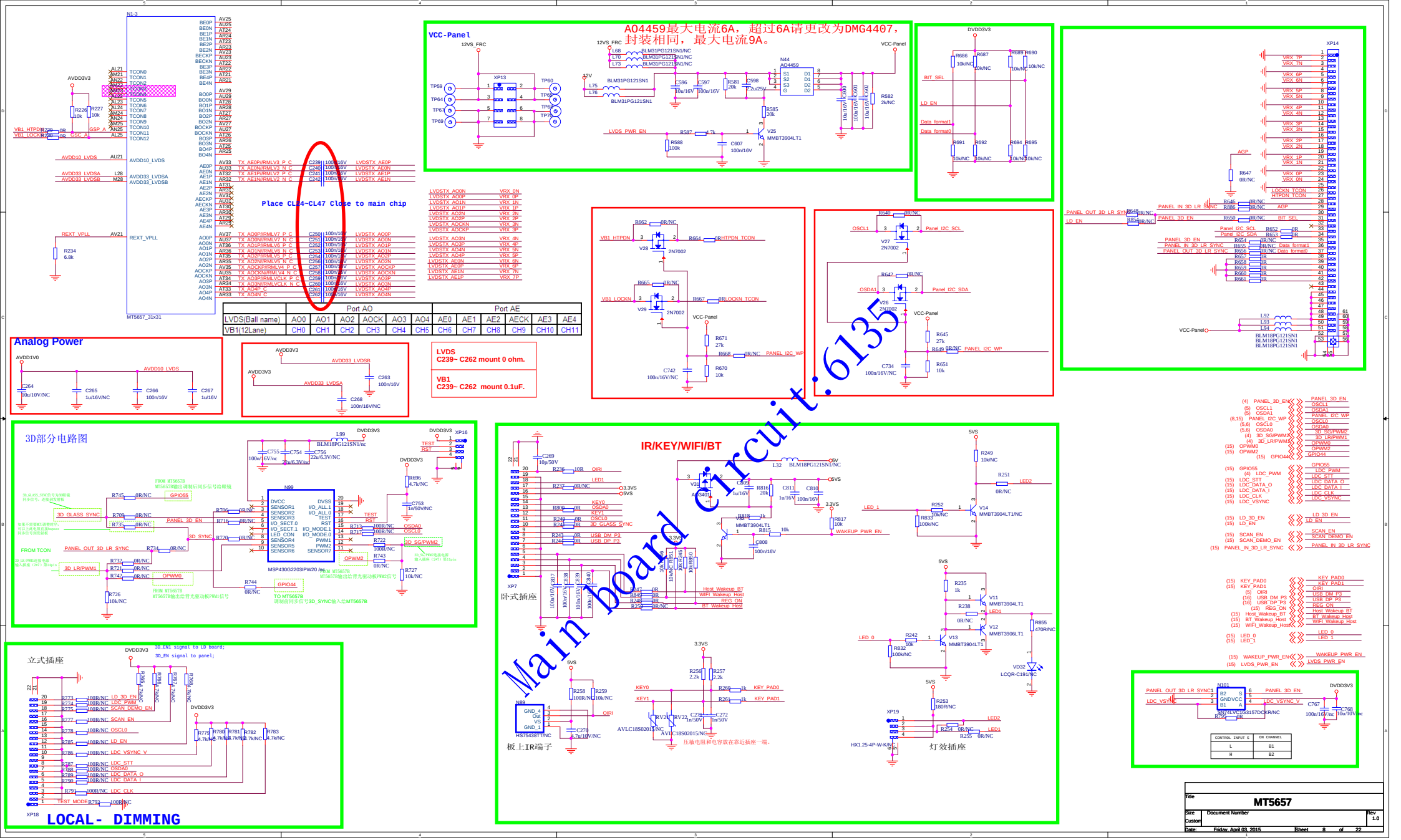

Title	MT5657	
Size: Custom	Document Number	Rev 1.0
Date: Friday, April 03, 2015	Sheet 8 of 22	

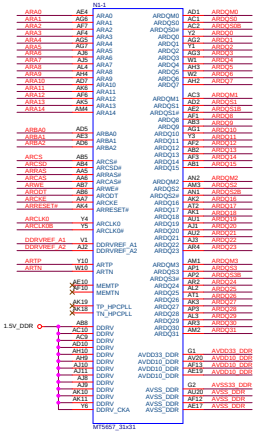

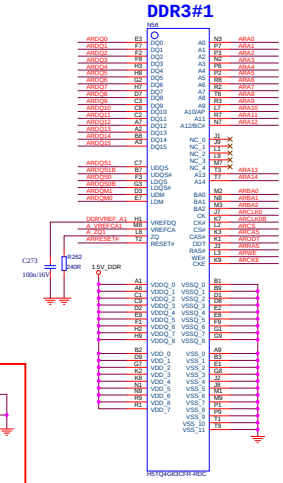

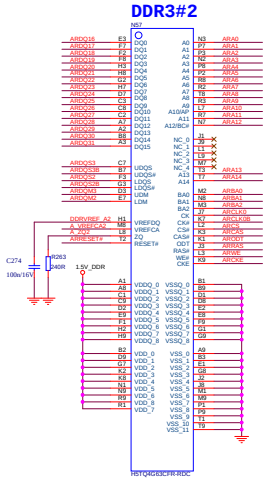

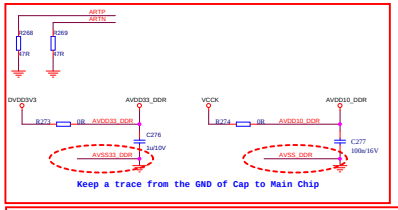

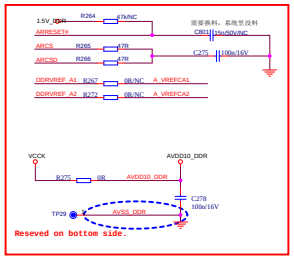

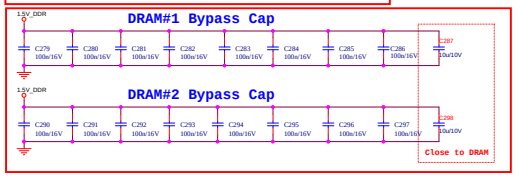

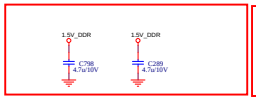

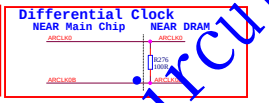

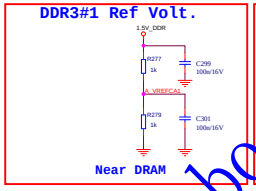

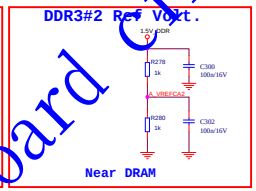

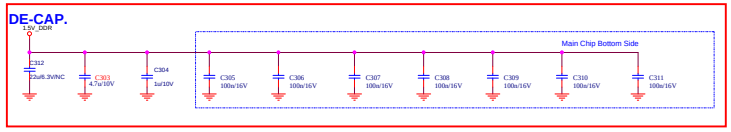

Main board Circuit:6135

Hisense Electric Co.,LTD			
Title	MT5657		
Size	Document Number		Rev
3			1.0
Date: Thursday, March 12, 2015	Sheet 9 of 22		

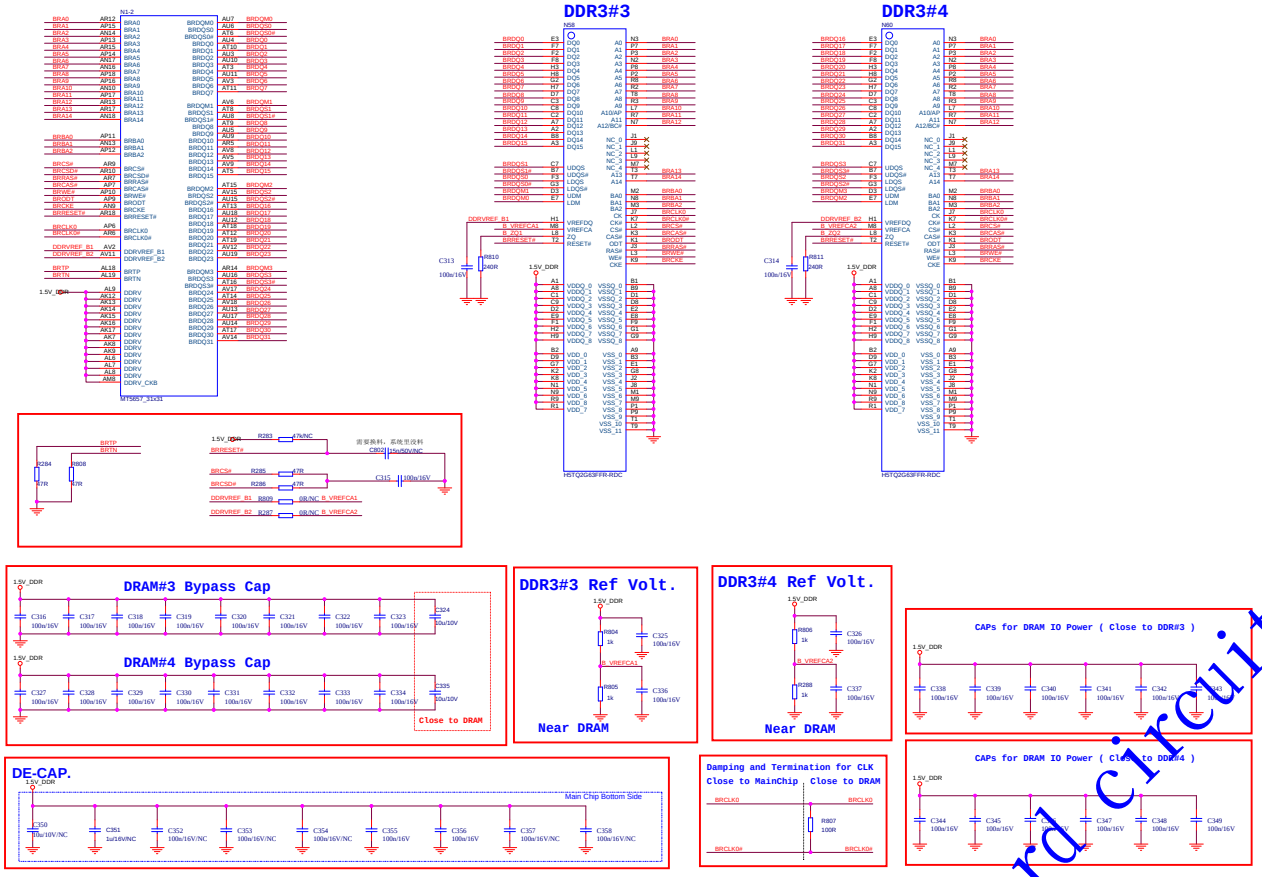

Main board circuit:6135

Hisense Electric Co.,LTD			
Title: MT5657			
Size: D	Document Number		Rev: 1.0
Date: Wednesday, March 25, 2015	Sheet 10 of 22		

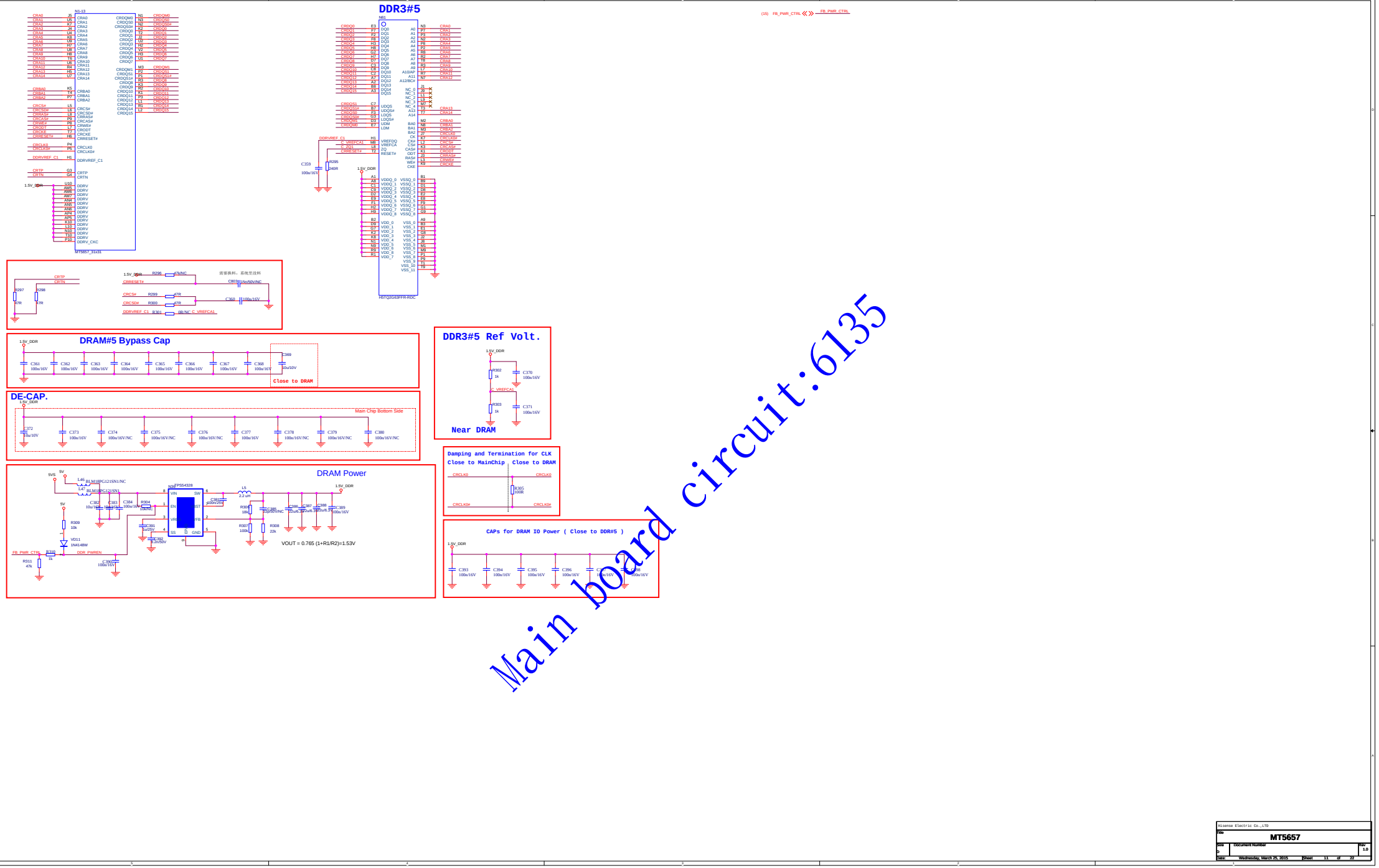
DDR3#5
N1-13
MT5657_31x31
N61
H5TQ2G63FFR-RDC
DRAM#5 Bypass Cap
Close to DRAM
DE-CAP.
Main Chip Bottom Side
DRAM Power
VOUT = 0.765 (1+R1/R2)=1.53V
DDR3#5 Ref Volt.
Near DRAM
Damping and Termination for CLK
Close to MainChip
Close to DRAM
CAPs for DRAM IO Power (Close to DDR#5)
Main board circuit:6135
Hisense Electric Co.,LTD
MT5657
Document Number
Rev 1.0
Date: Wednesday, March 25, 2015
Sheet 11 of 22

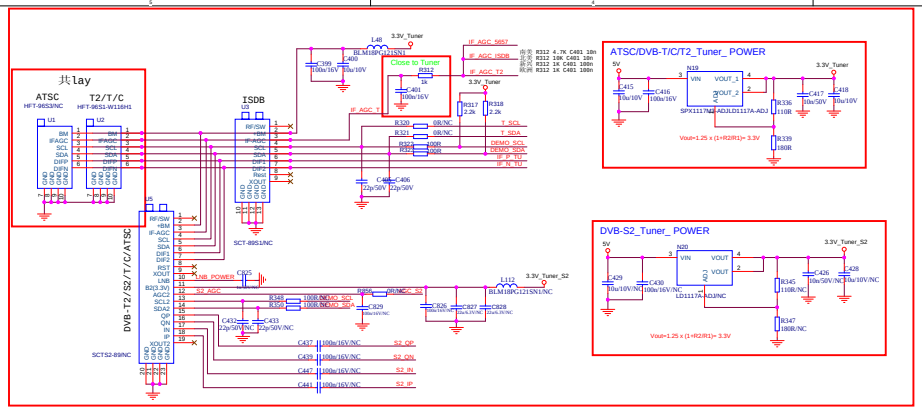

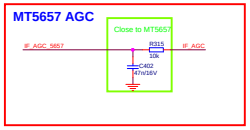

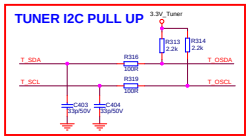

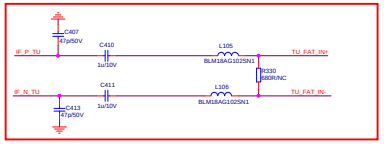

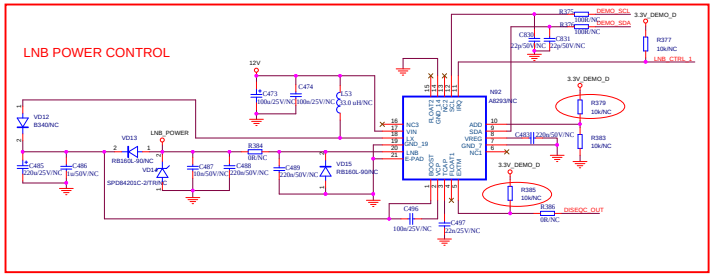

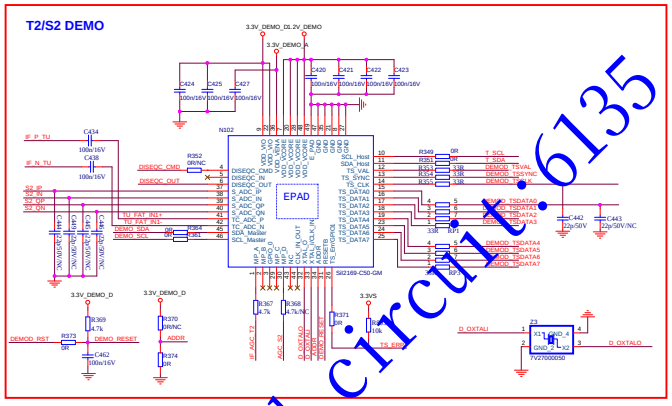

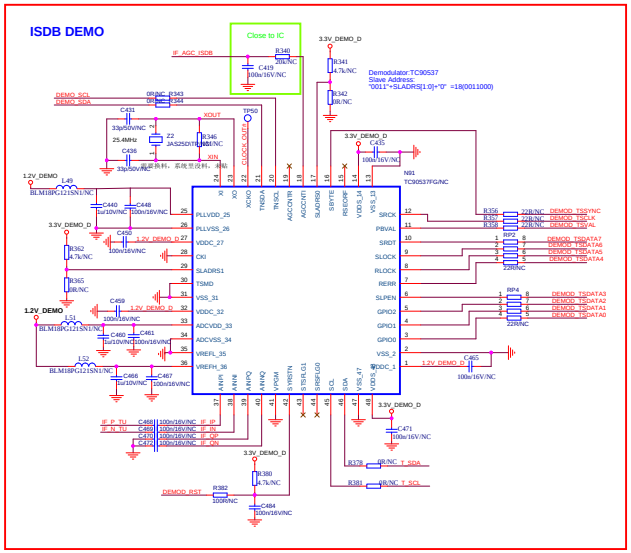

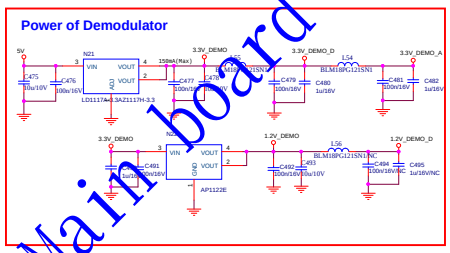

Main board circuit 6135

Hisense Electric Co.,LTD	
Title	MT5657
Size: D	Document Number:
Rev	1.0
Date: Tuesday, January 27, 2015	Sheet 12 of 22

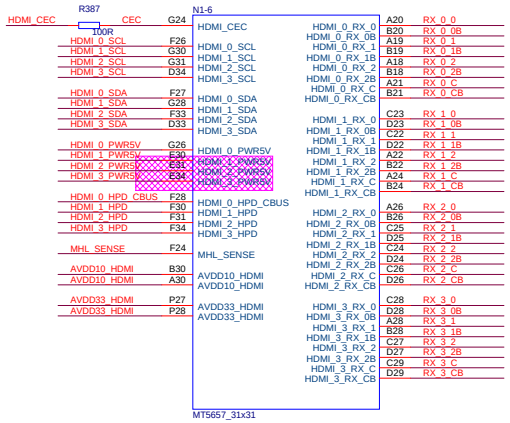

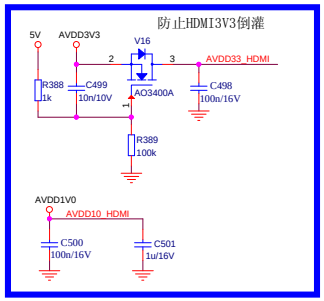

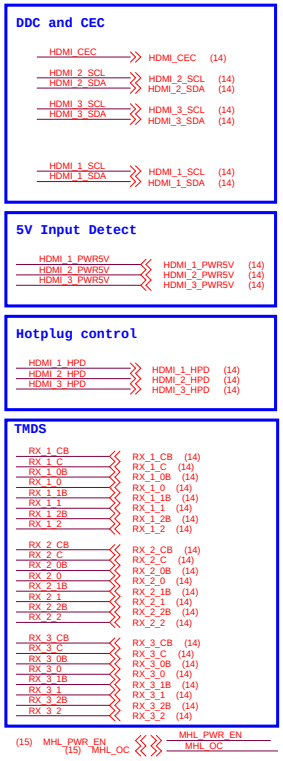

HDMI1(MHL)

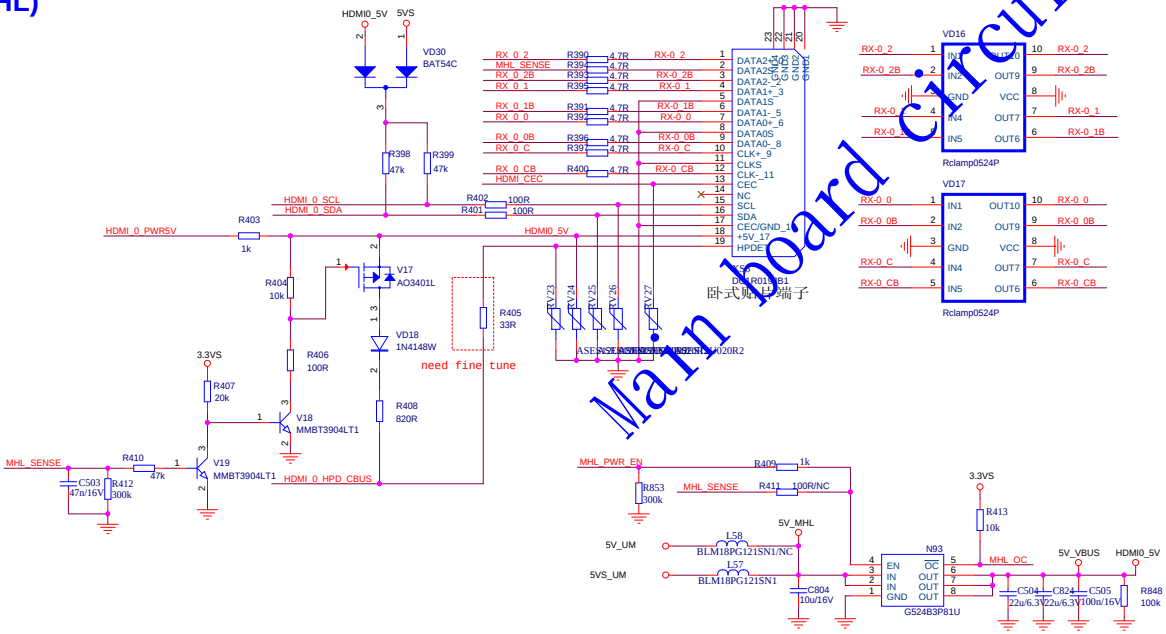

Main board circuit:6135

Hisense Electric Co.,LTD			
Title	MT5657		
Size	Document Number		Rev 1.0
Custom			
Date: Monday, January 26, 2015	Sheet 13 of 22		

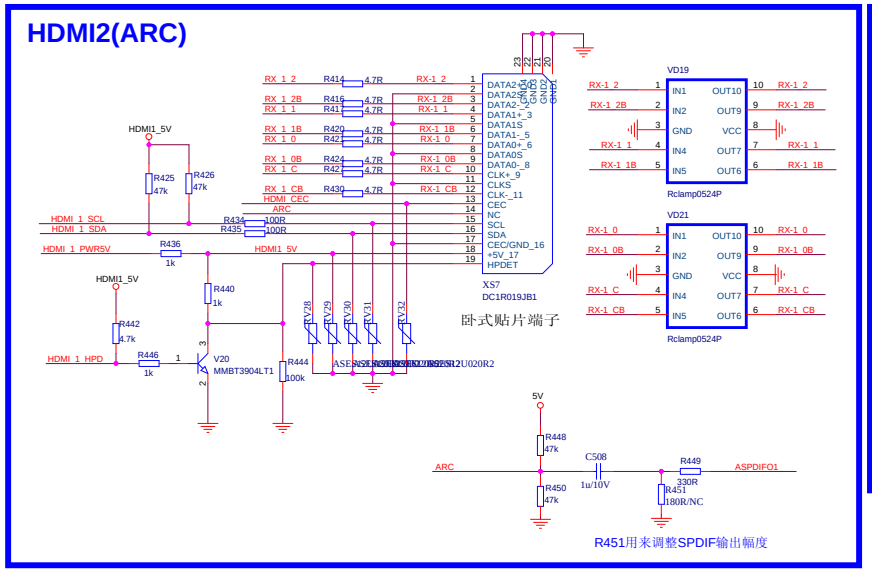

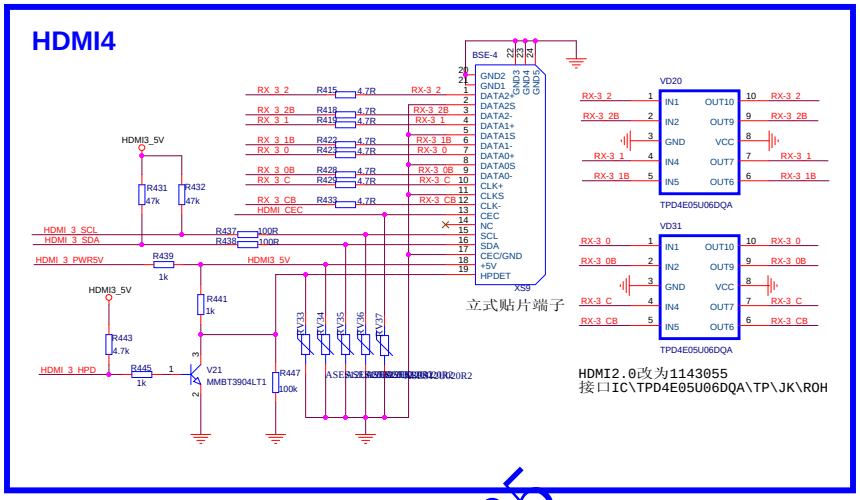

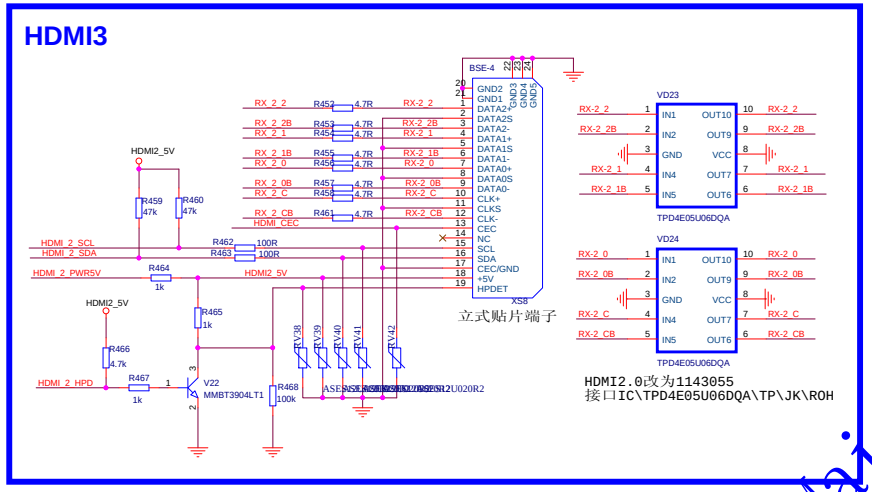

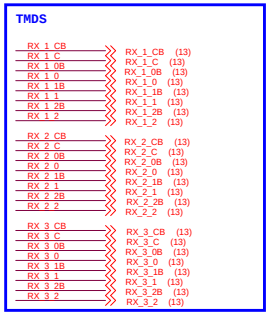

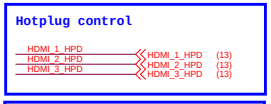

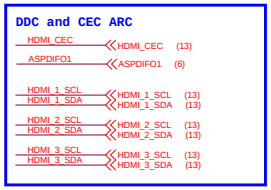

Main board circuit:6135

Title	MT5657	
Size	Document Number	Rev 1.0
Custom		
Date: Monday, January 26, 2015	Sheet 14 of 22	

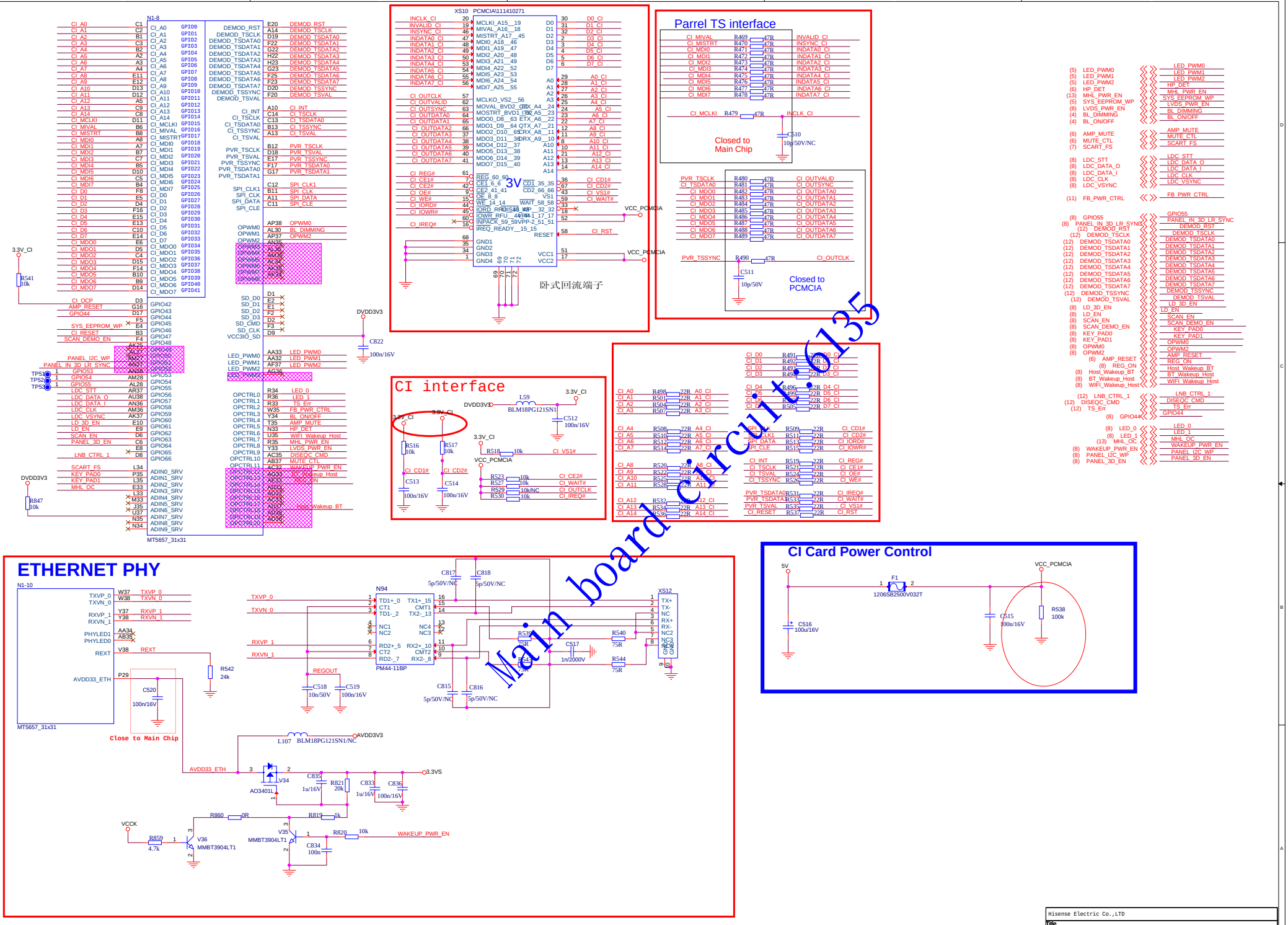

Hisense Electric Co.,LTD	
Title	MT5657
Size C	Document Number
Rev	1.0
Date: Monday, January 26, 2015	Sheet 15 of 22

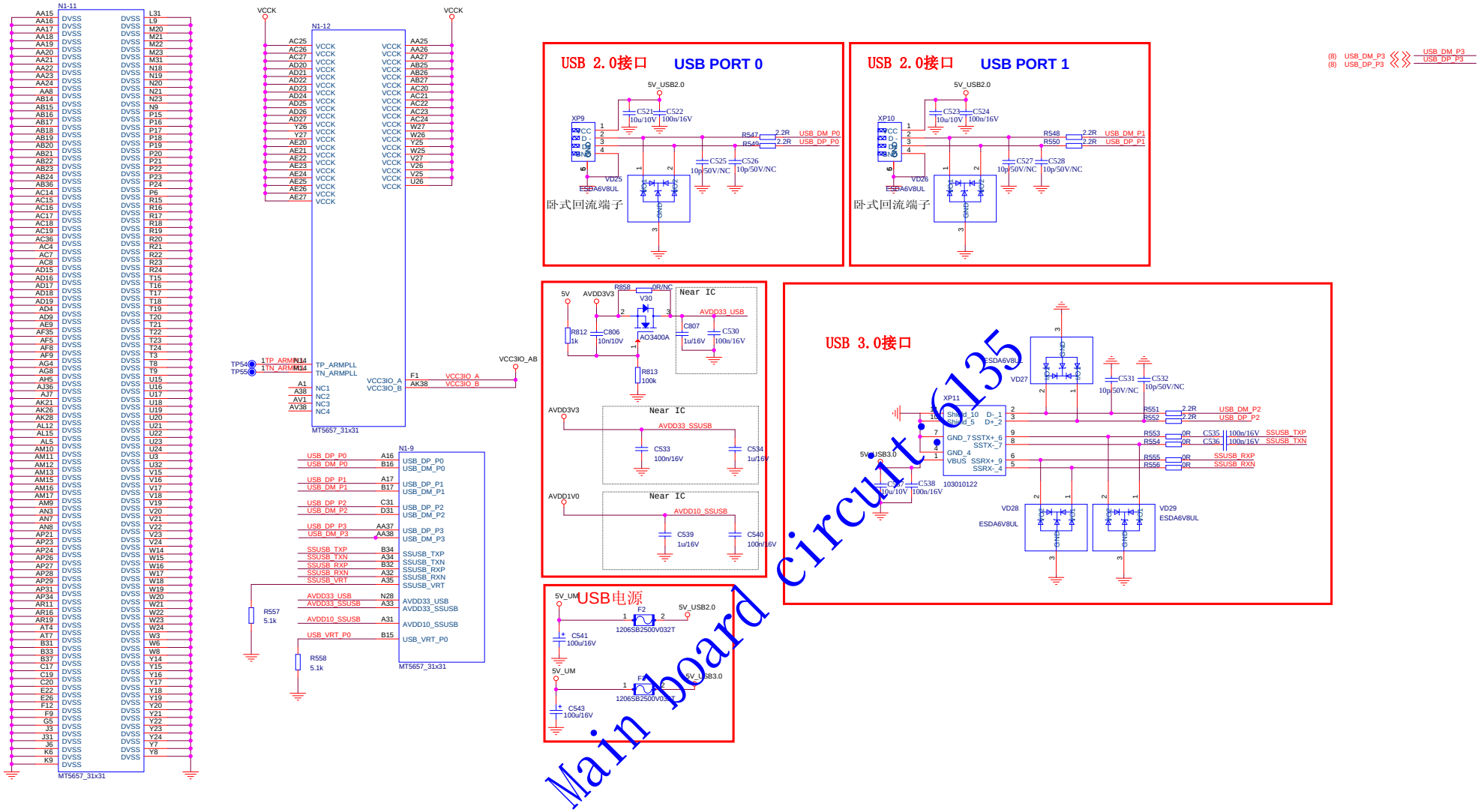

Main board circuit:6135

Hisense Electric Co.,LTD	
Title	MT5657
Size C	Document Number
Rev 1.0	
Date: Monday, January 26, 2015	Sheet 16 of 22

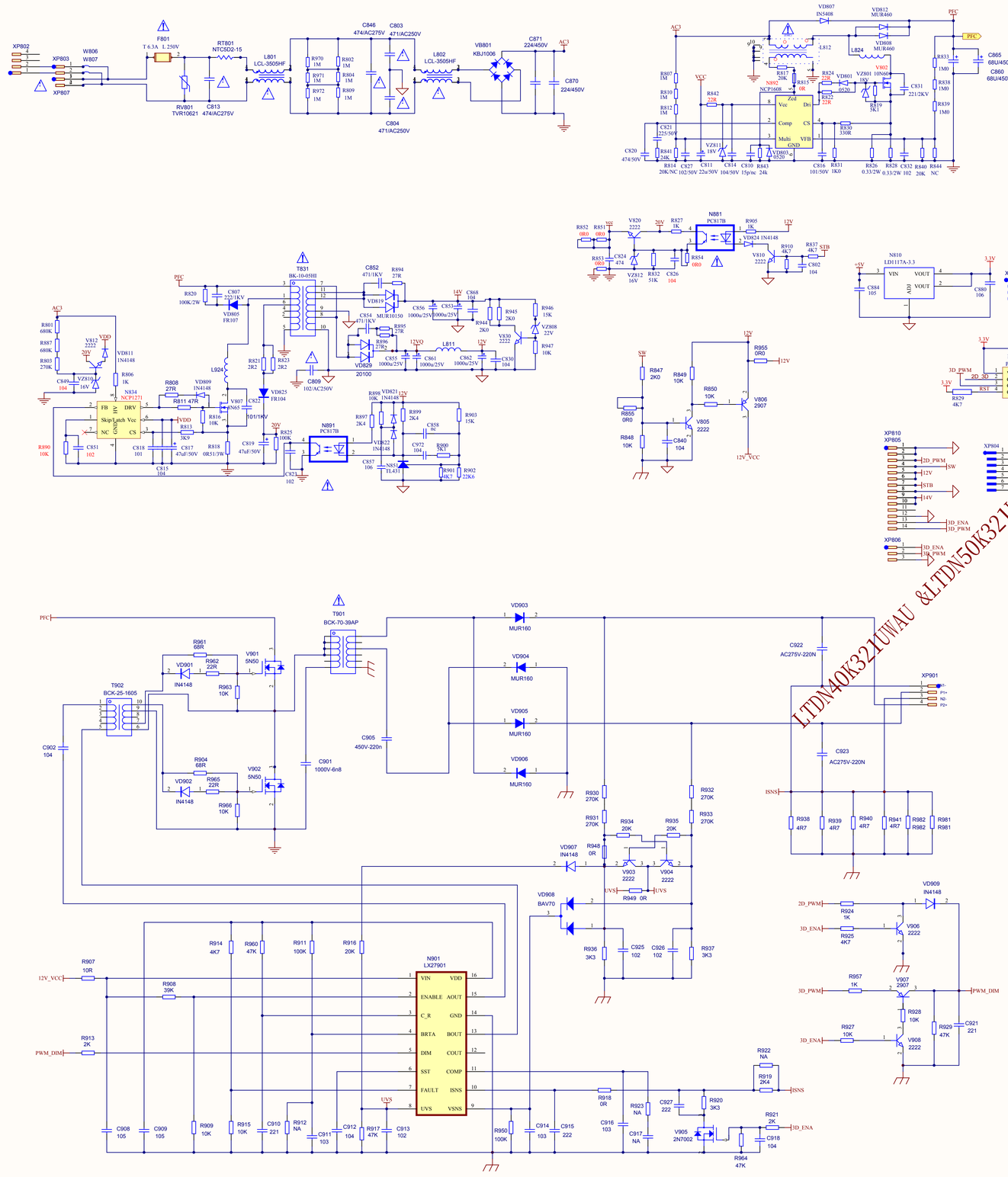
XP802
XP803
XP807
W806
W807
F801
T 6.3A L 250V
RT801
NTC5D2-15
RV801
TVR10621
C813
474/AC275V
L801
LCL-3505HF
C846
474/AC275V
C803
471/AC250V
C804
471/AC250V
L802
LCL-3505HF
VB801
KBJ1006
C871
224/450V
C870
224/450V
AC3
VD807
IN5408
VD812
MUR460
VD808
MUR460
L824
PFC
C865
68U/450V
C860
68U/450V
NCP1608
VZ811
18V
VD801
IN4148
VZ801
10N60
C831
221/2KV
C820
474/50V
R814
20K/NC
C527
102/50V
C311
22u/50V
C314
104/50V
C310
15p/ne
R543
24k
C816
101/50V
R831
1K0
R826
0.33/2W
R828
0.33/2W
C832
102
R840
20K
R844
NC
T831
BK-10-05HI
C852
471/1KV
R894
27R
VD819
C856
1000u/25V
C853
1000u/25V
C868
104
R946
15K
R945
2K0
VZ808
22V
R947
10K
C830
104
C862
1000u/25V
L811
C861
1000u/25V
C855
1000u/25V
VD829
20100
C554
471/1KV
MUR10150
R895
27R
R896
27R
R944
2K0
R820
100K/2W
C807
222/1KV
VD805
FR107
L924
R821
2R2
R823
2R2
C809
102/AC250V
VD825
FR104
C822
101/1KV
R825
100K
C819
47uF/50V
N891
PC817B
R898
10K
VD821
1N4148
R899
2K4
R897
2K4
VD822
1N4148
C858
NS51
TL431
C972
104
R900
3K1
R901
4K7
R902
22K6
R903
15K
C857
10u
R812
20V
VD811
1N4148
R806
1K
C849
104
VZ810
16V
R807
27R
VD809
1N4148
R811 47R
R808
27R
N834
NCP1271
FB
Skip/Latch
NC
DRV
Vcc
CS
R813
3K9
R816
10K
R818
0R51/3W
C817
47uF/50V
C818
101
C815
104
C851
102
R890
10K
R801
680K
R887
680K
R803
270K
AC3
N881
PC817B
R852
0R0
R851
0R0
R853
0R0
C824
474
VZ812
16V
R832
51K
C826
104
R854
0R0
R905
1K
VD824 1N4148
R910
4K7
R837
4K7
STB
C802
104
N810
LD1117A-3.3
VIN
VOUT
ADJ
C884
105
C880
106
XP809
R998
100R
R882
100R
R865
1M0
R866
1M0
2D_2D
VSYNC
VCC5V
+5V
C801
104
N902
PIC12F609
VDD
GP5
GP4
GP3//MCLR/VPP
VSS
GP0/PGD
GP1/PGC
GP2/INT/CCP1
RST
R829
4K7
3D_PWM
R955
0R0
R847
2K0
R849
10K
R850
10K
V806
2907
V805
2222
C840
104
R855
0R0
R848
10K
12V_VCC
XP810
XP805
XP804
XP806
2D_PWM
SW
12V
STB
14V
3D_ENA
3D_PWM
LTDN40K321UWAU &LTDN50K321UWF PB:5687
power board:5687
T901
BCK-70-39AP
T902
BCK-25-1605
VD903
MUR160
VD904
MUR160
VD905
MUR160
VD906
MUR160
C922
AC275V-220N
C923
AC275V-220N
XP901
V1-
P1+
N2-
P2+
R961
68R
R962
22R
VD901
IN4148
R963
10K
V901
5N50
R904
68R
R965
22R
VD902
IN4148
R966
10K
V902
5N50
C902
104
C905
450V-220n
C901
1000V-6n8
R930
270K
R931
270K
R932
270K
R933
270K
R934
20K
R935
20K
R948
0R
VD907
IN4148
V903
2222
V904
2222
R949 0R
UVS
ISNS
R938
4R7
R939
4R7
R940
4R7
R941
4R7
R982
R982
R981
R981
VD908
BAV70
R936
3K3
C925
102
C926
102
R937
3K3
VD909
IN4148
R924
1K
V906
2222
R925
4K7
R957
1K
V907
2907
R928
10K
R929
47K
C921
221
R927
10K
V908
2222
PWM_DIM
R907
10R
R908
39K
R913
2K
R914
4K7
R960
47K
R911
100K
R916
20K
N901
LX27901
VIN
ENABLE
C_R
BRTA
DIM
SST
FAULT
UVS
VDD
AOUT
GND
BOUT
COUT
COMP
ISNS
VSNS
C908
105
C909
105
R909
10K
R915
10K
C910
221
R912
NA
C911
103
C912
104
R917
47K
C913
102
R950
100K
C914
103
C915
222
R918
0R
R923
NA
C916
103
C917
NA
C927
222
R920
3K3
R922
NA
R919
2K4
R921
2K
C918
104
V905
2N7002
R964
47K

power board:: 6106

Generated by Foxit PDF Creator © Foxit Software
http://www.foxitsoftware.com For evaluation only.

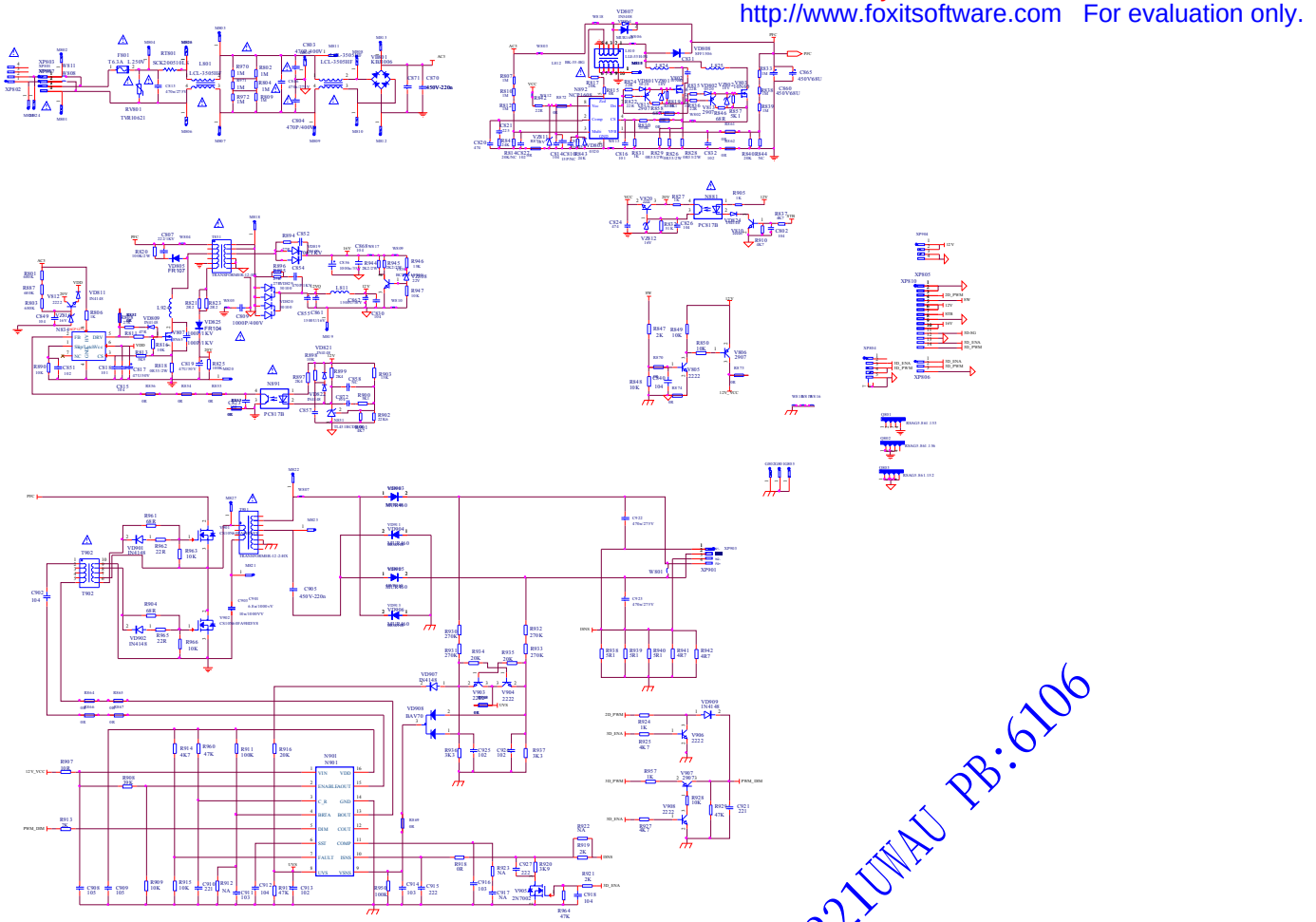

LTDN55K321UWT & LTDN58K321UWAU PB:6106

RSAG2.025.4715

更改履历	更改版本	更改内容	更改人	更改日期
	V1.1			
	V1.2			
	V1.3			
	V1.4			
	V1.5			

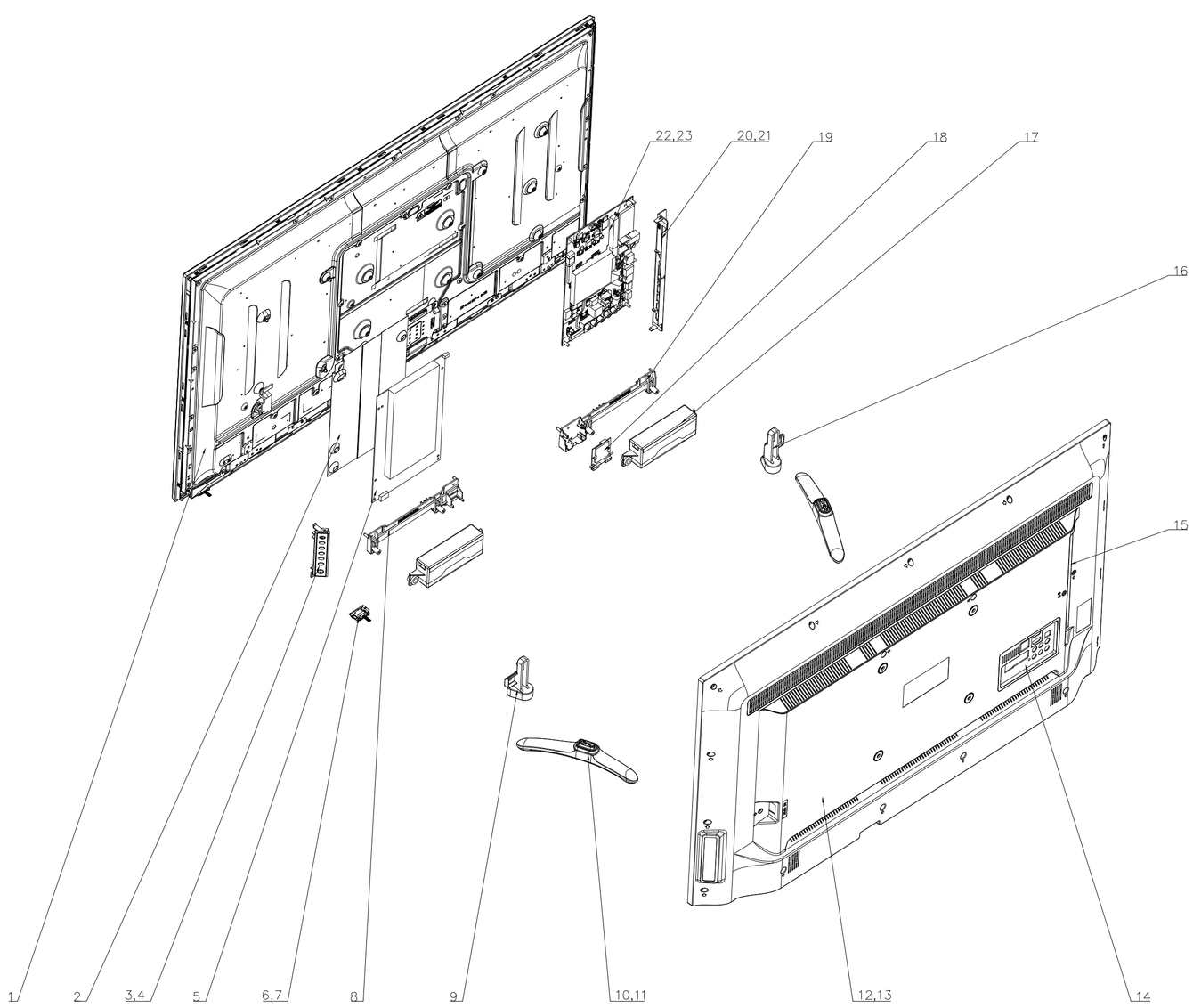

No.	Part Name	Num.	Code No.	Remark
23	screw	9	SJ2836-87 M3X8镀锌银白	
22	Main board	1	RSAG2.908.6135-02	
21	screw	2	SJ2825-87 ST3X8C黑	
20	plastic terminal	1	RSAG8.081.1318	
19	plastic bracket	1	RSAG8.078.3992	
18	WIFImodule	1	NU361-HS	
17	speaker	1	VIT3016-8W8Ω-04	
16	metal bracket	1	RSAG8.038.4369	
15	side label	1	RSAG8.804.5333	
14	bottom label	1	RSAG8.804.5362	
13	screw	29	RSAG8.912.0172\M3×6\大薄头	
12	TV Rear	1	RSAG6.170.0662	
11	screw	4	GB/T 818-2000 M4X12黑	
10	stand	1	RSAG6.121.0531	
9	Metal bracket	1	RSAG8.038.4368	
8	plastic bracket	1	RSAG8.078.4051	
7	IR board	1	RSAG2.908.5624-04	
6	lens	1	RSAG8.640.0434	
5	power board	1	RSAG2.908.5687-46	
4	Keypad board	1	RSAG2.908.5415	
3	Keypad bracket and button name	1	RSAG6.356.0146	
2	Insulating flake	1	RSAG8.600.0802	
1	Panel	1	HD396DU-B01	

旧底图总号	底图总号	签名

更改标记	数量	更改单号	签名	日期

未注公差标准	单位
GB	mm

设计	么子帅	
审核		
工艺		
标准化		
批准		

LTDN40K321UWAU
EXPLODE VIEW

RSAG2.025.4715

阶段标记	质量	比例
		1:4

共 张 第 页

青岛海信电器股份有限公司

格式(1) 幅面: A1

RSAG2.025.4564

更改履历	更改版本	更改内容	更改人	更改日期
	V1.1			
	V1.2			
	V1.3			
	V1.4			
	V1.5			

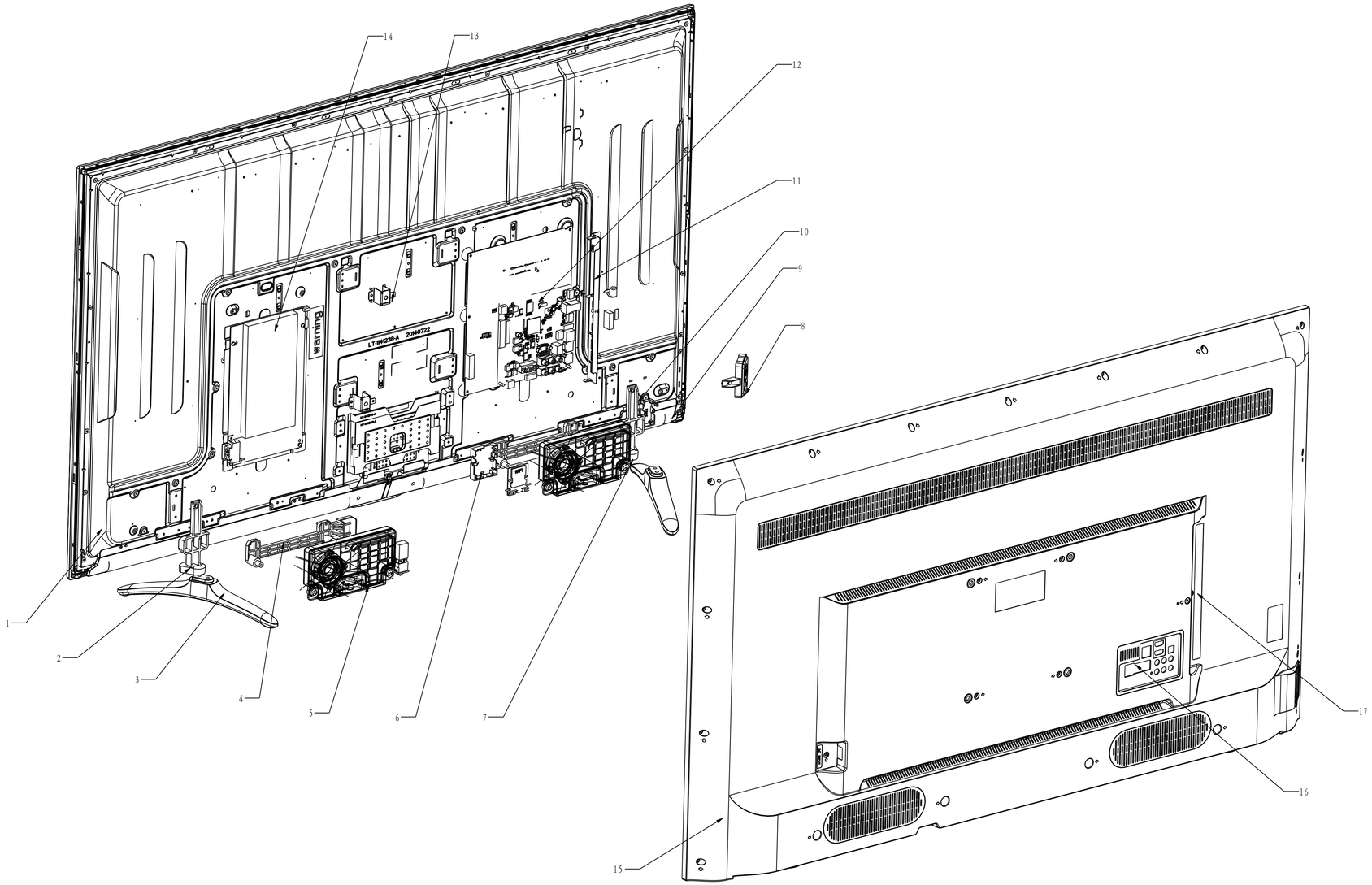

序号	名 称	数量	代 号	备 注
17	label	1	RSAG8.804.5333	
16	label	1	RSAG8.804.5362	
15	back cover	1	RSAG8.074.2595	
14	power board	1	RSAG2.908.6106	
13	hanging bracket	4	RSAG6.150.1355	
12	main board	1	RSAG2.908.6135	
11	terminal board	1	RSAG8.081.1318	
10	base bracket(R)	1	RSAG8.038.4606	
9	RC board	1	RSAG2.908.6151	
8	key board	1	RSAG6.356.0145	
7	base bracket(R)	1	RSAG8.038.4606	
6	speak bracket(R)	1	RSAG8.078.4008	
5	speak unit	2	V1T90170-12W8Ω	
4	speak bracket(L)	1	RSAG8.078.4007	
3	base	2	RSAG6.121.0544	
2	base bracket(L)	1	RSAG8.038.4605	
1	panel	1	HD550DF-B52(020)\S1	

旧底图总号

底图总号

签 名

更改标记	数量	更改单号	签名	日期

未注公差标准 单位：mm

设 计	张伟亮	
审 核		
工 艺		
标准化		
批 准		

爆炸图

LTDN55K321uwt

RSAG2.025.4564

阶段标记	质 量	比 例
		1:4

第 页 共 页

青岛海信电器股份有限公司

格式(1) 幅面:A1

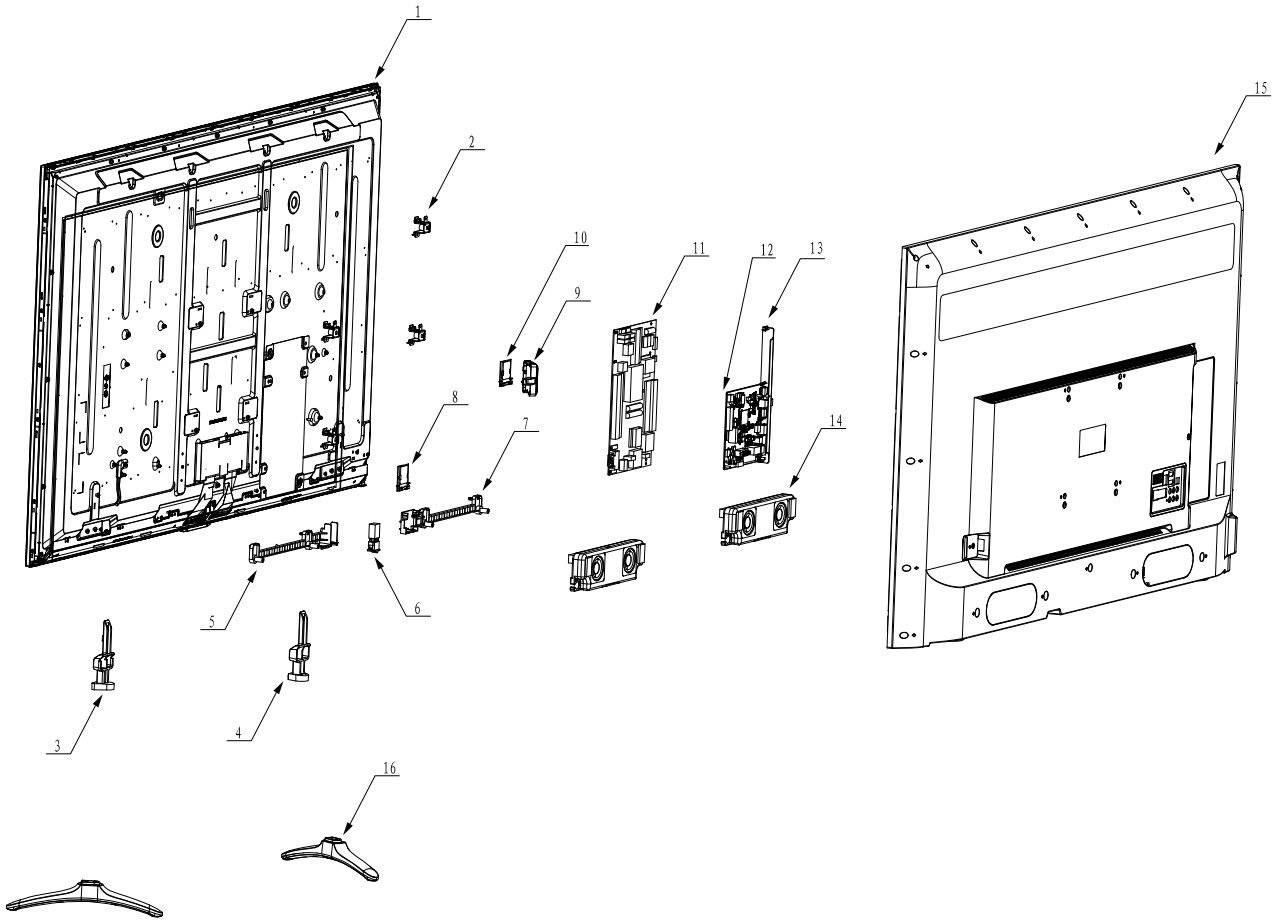

No.	Part Name	1	Code No.	Remark
18				
17				
16	Base	2	RSAG6.121.0555	
15	TV rear	1	RSAG8.074.2592	
14	speaker	1	VIT70236-15W8Ω-02	
13	plastci terminal	1	RSAG8.081.1358	
12	Main board	1	RSAG2.908.6135-02	
11	power board	1	RSAG2.908.6106\ROH	
10	keypad bracket	1	RSAG6.356.0145	
9	key board	1	RSAG2.908.6172	
8	WIFI unit	1	NU361-HS	
7	plastic bracket	1	RSAG8.078.4000	
6	power switch	1	HF-606(TV)-P通PS8-12-D-047B	
5	plastic bracket	1	RSAG8.078.4035	
4	Metal bracket	1	RSAG8.038.4606	
3	Metal bracket	1	RSAG8.038.4605	
2	bracket unit	4	RSAG6.150.1355	
1	Panel	1	HD580DU-B01\S1	

更改标记	数量	更改单号	签名	日期

设 计	郑君
审 核	
工 艺	
标准化	
批 准	

LTDN58K321UWAU
explode view

阶段标记	质 量	比 例

第 1 页 共 1 页

日底图总号
底图总号
签 名

格式(1) 幅面: A2