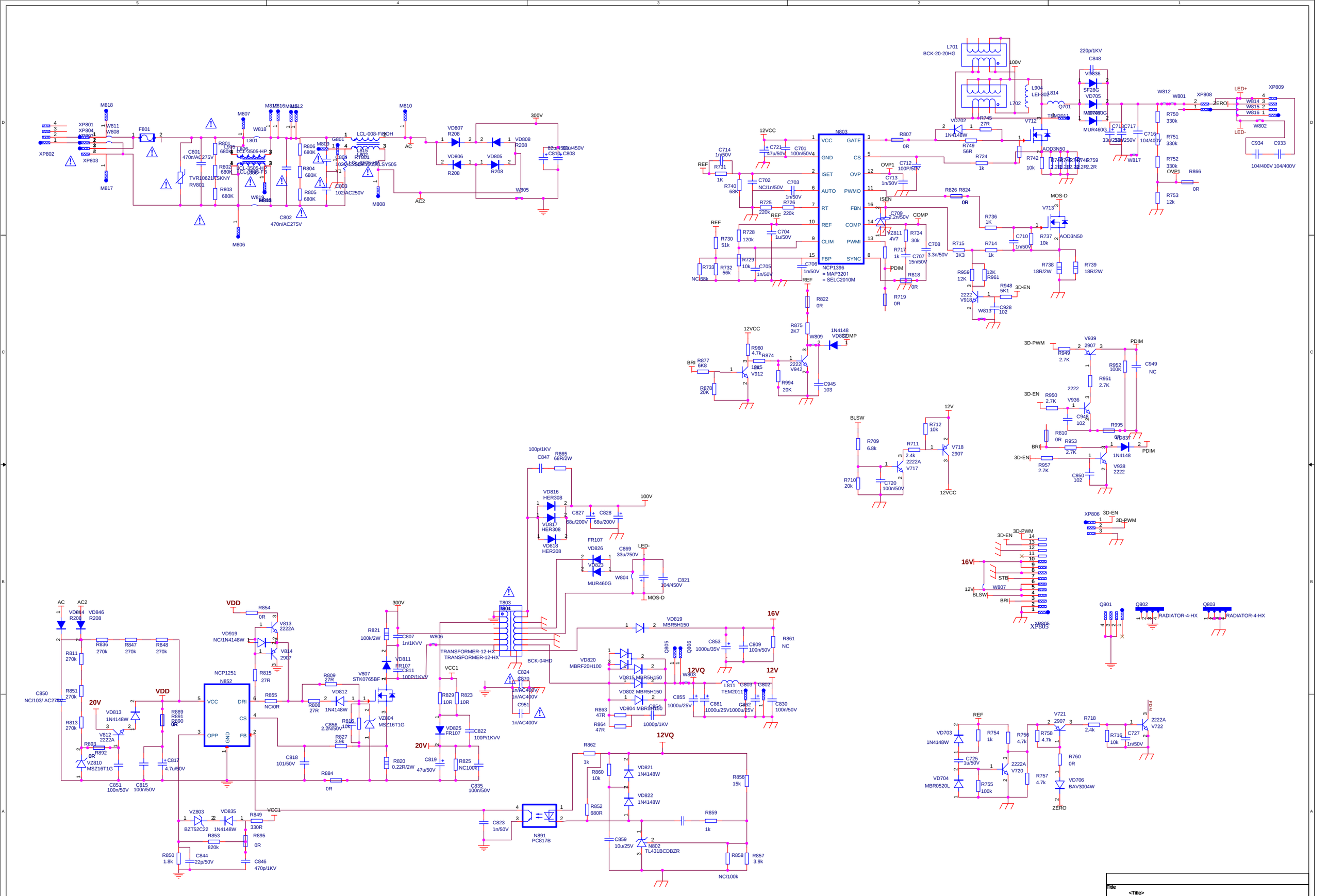

Title	<Title>
Size A2	Document Number <Doc>
Rev	<RevCode>
Date: Wednesday, December 18, 2013	Sheet 1 of 1

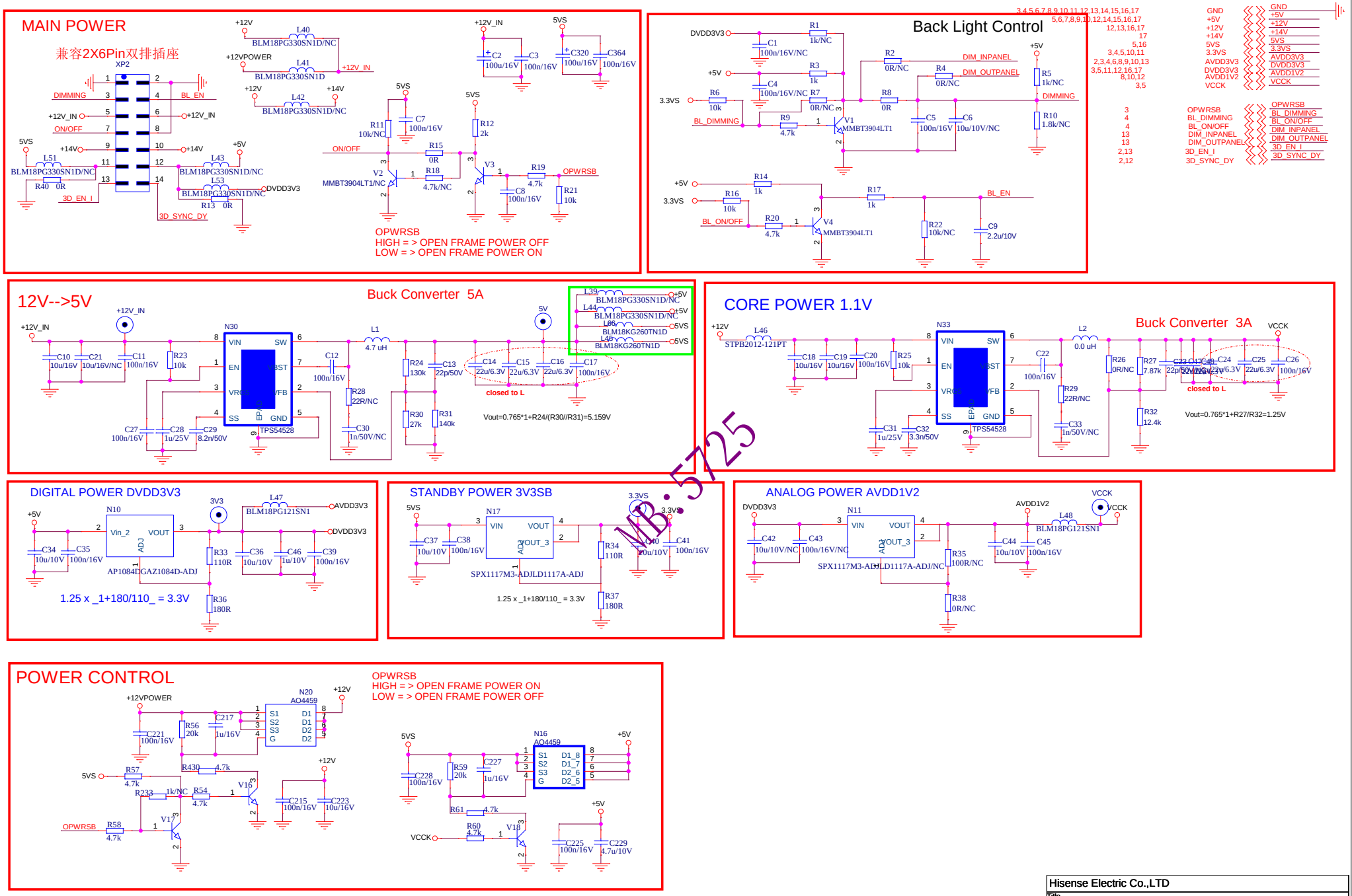

MB:5725

Hisense Electric Co.,LTD			
Title	POWER AND INVERTOR		
Size	Document Number		Rev
A3	MT5652		1.0
Date:	Tuesday, November 12, 2013	Sheet 2 of 17	

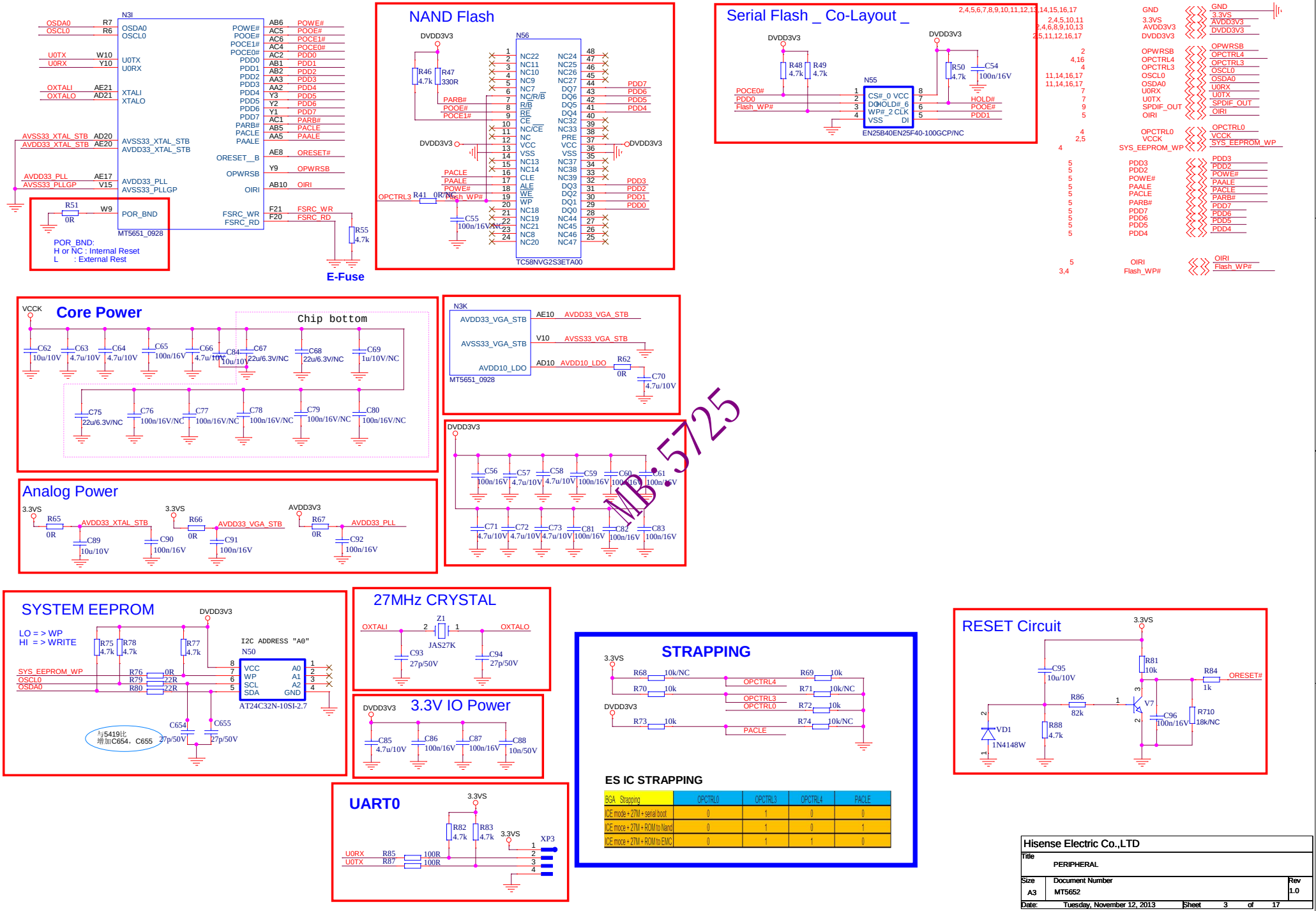
N3I
MT5651_0928
POR_BND:
H or NC : Internal Reset
L : External Rest
E-Fuse
NAND Flash
N56
TC58NVG2S3ETA00
Serial Flash _ Co-Layout _
N55
EN25B40EN25F40-100GCP/NC
Core Power
Chip bottom
N3K
MT5651_0928
Analog Power
SYSTEM EEPROM
LO = > WP
HI = > WRITE
I2C ADDRESS "A0"
N50
AT24C32N-10SI-2.7
27MHz CRYSTAL
JAS27K
3.3V IO Power
STRAPPING
ES IC STRAPPING
UART0
XP3
RESET Circuit
MB-5725
Hisense Electric Co.,LTD
Title
PERIPHERAL
Size
A3
Document Number
MT5652
Rev
1.0
Date: Tuesday, November 12, 2013
Sheet 3 of 17

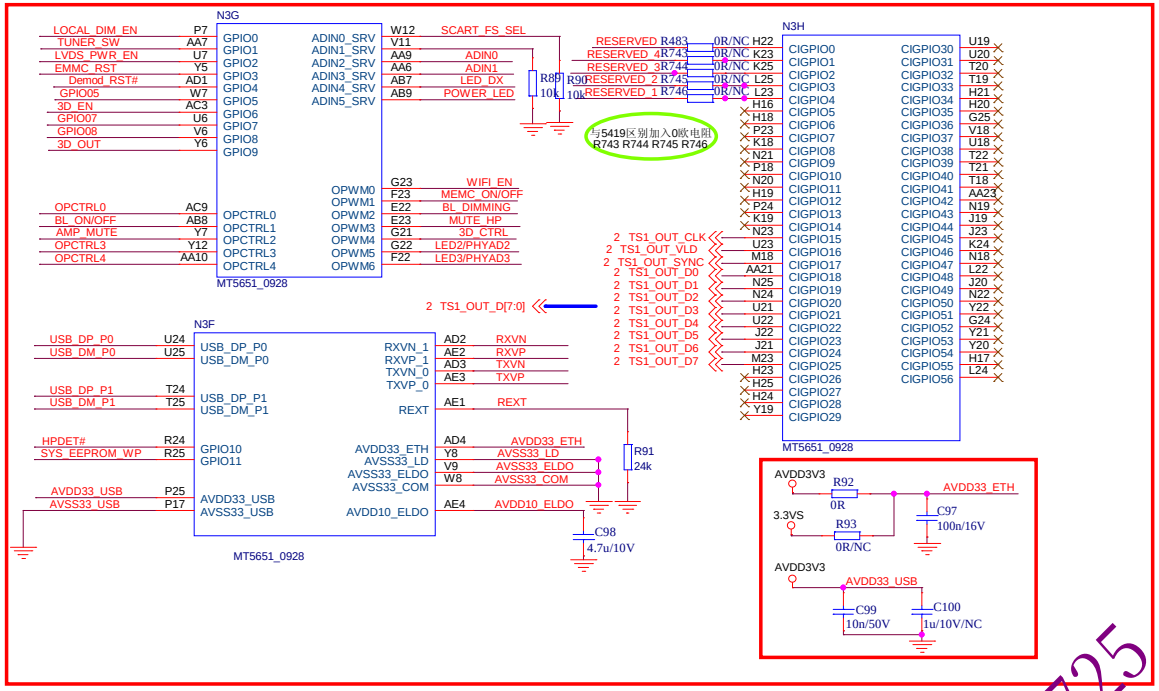

2,3,5,6,7,8,9,10,11,12,13,14,15,16,17	GND	GND
2,3,6,8,9,10,13	AVDD3V3	AVDD3V3
2,3,5,10,11	3.3VS	3.3VS
3	OPCTRL3	OPCTRL3
3,16	OPCTRL4	OPCTRL4
3	SYS_EEPROM_WP	SYS_EEPROM_WP
15	WIFI_EN	WIFI_EN
11	TUNER_SW	TUNER_SW
17	HPDET#	HPDET#
17	MUTE_HP	MUTE_HP
12	LVDS_PWR_EN	LVDS_PWR_EN
13	LOCAL_DIM_EN	LOCAL_DIM_EN
5	POWER_LED	POWER_LED
5	ADIN0	ADIN0
5	ADIN1	ADIN1
15	USB_DP_P0	USB_DP_P0
15	USB_DM_P0	USB_DM_P0
15	USB_DP_P1	USB_DP_P1
15	USB_DM_P1	USB_DM_P1
5	EMMC_RST	EMMC_RST
2	BL_DIMMING	BL_DIMMING
2	BL_ON/OFF	BL_ON/OFF
12	3D_OUT	3D_OUT
12	3D_CTRL	3D_CTRL
12	3D_EN	3D_EN
13	MEMC_ON/OFF	MEMC_ON/OFF
3	OPCTRL0	OPCTRL0
12,13	GPIO07	GPIO07
12,13	GPIO08	GPIO08
16	AMP_MUTE	AMP_MUTE
13	GPIO05	GPIO05
4,5	LED_DX	LED_DX
3,4	Flash_WP#	Flash_WP#
3,4	Demod_RST#	Demod_RST#
12	RESERVED	RESERVED
12	RESERVED_1	RESERVED_1
12	RESERVED_2	RESERVED_2
12	RESERVED_3	RESERVED_3
12	RESERVED_4	RESERVED_4

MB:5725

ETHERNET PHY

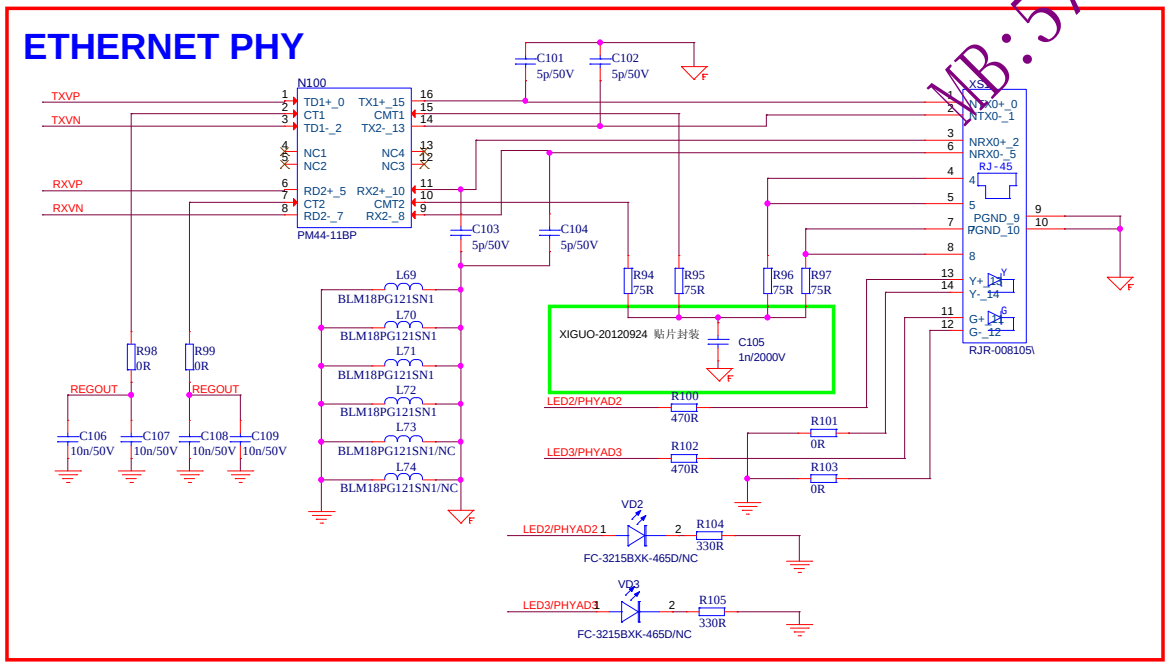

Hisense Electric Co.,LTD	
Title	GPIO/AD/ETHERNET PHY
Size A3	Document Number MT5652
Rev	1.0
Date: Tuesday, November 12, 2013	Sheet 4 of 17

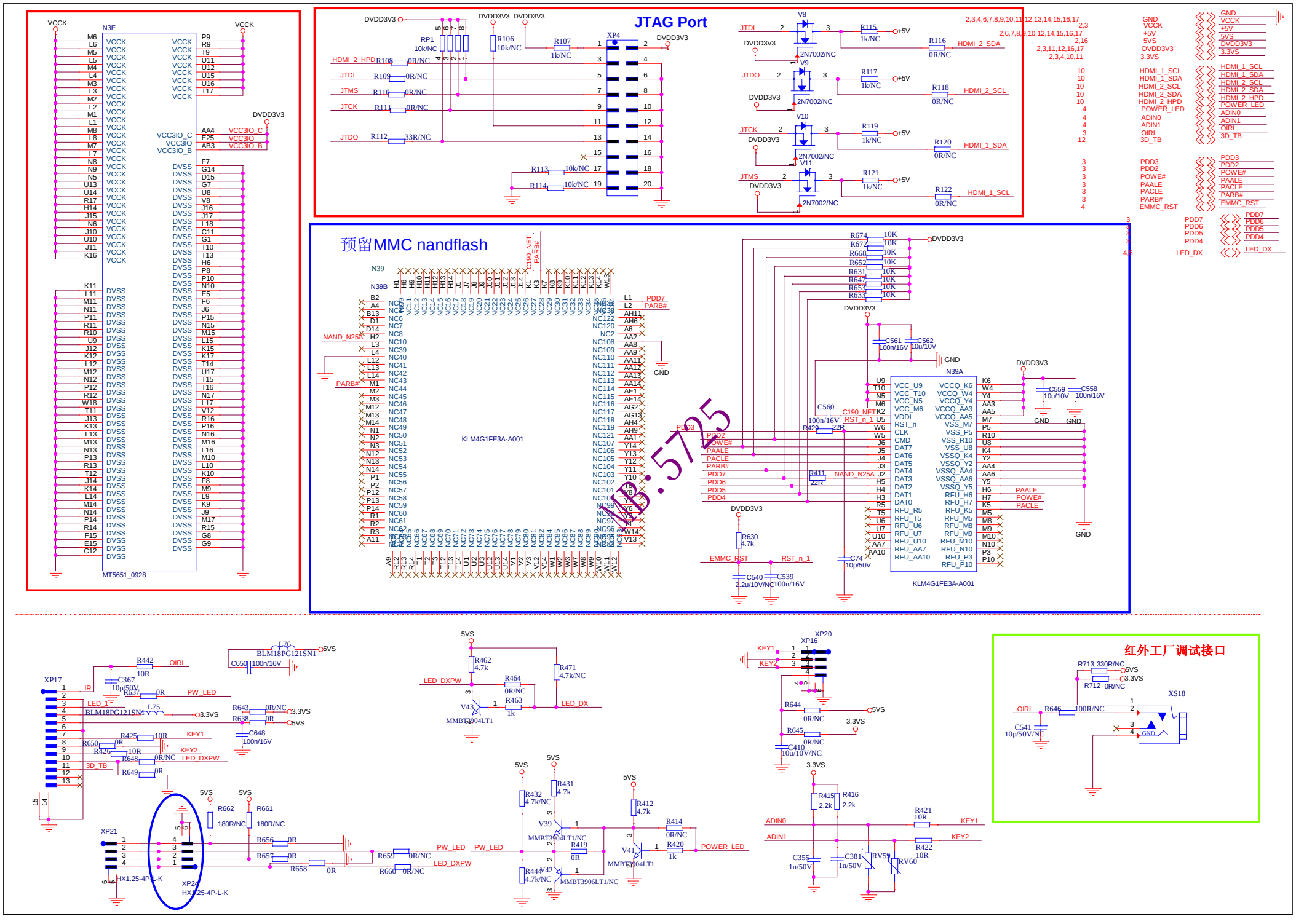
N3E
MT5651_0928
JTAG Port
XP4
预留MMC nandflash
N39
N39B
KLM4G1FE3A-A001
N39A
KLM4G1FE3A-A001
XP17
XP21
XP24
XP20
XP16
红外工厂调试接口
XS18

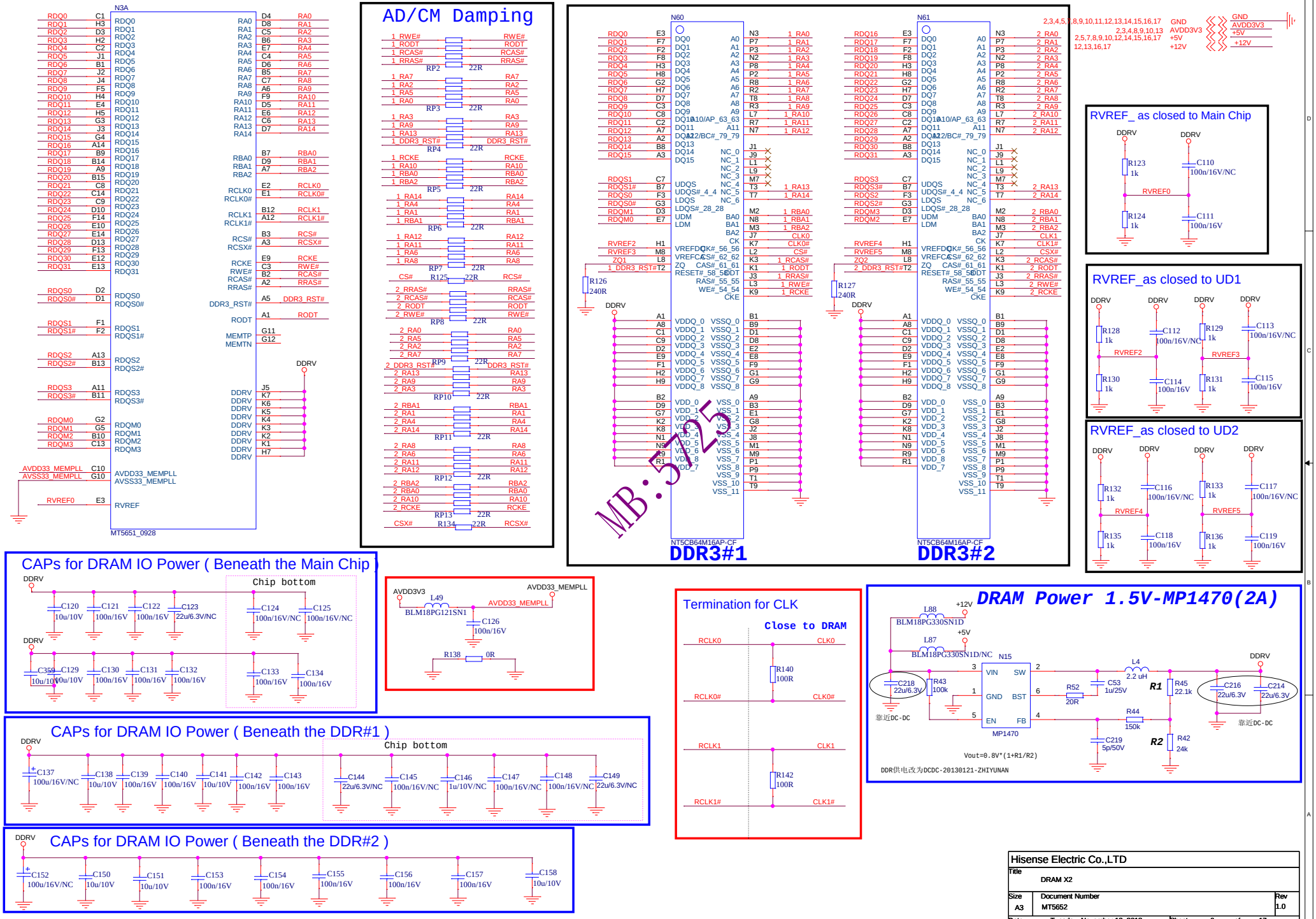
N3A
MT5651_0928
AD/CM Damping
N60
NT5CB64M16AP-CF
DDR3#1
N61
NT5CB64M16AP-CF
DDR3#2
RVREF_ as closed to Main Chip
RVREF_as closed to UD1
RVREF_as closed to UD2
CAPs for DRAM IO Power (Beneath the Main Chip)
Chip bottom
BLM18PG121SN1
Termination for CLK
Close to DRAM
DRAM Power 1.5V-MP1470(2A)
BLM18PG330SN1D
BLM18PG330SN1D/NC
MP1470
Vout=0.8V*(1+R1/R2)
DDR供电改为DCDC-20130121-ZHIYUNAN
CAPs for DRAM IO Power (Beneath the DDR#1)
CAPs for DRAM IO Power (Beneath the DDR#2)
Hisense Electric Co.,LTD
Title
DRAM X2
Size
A3
Document Number
MT5652
Rev
1.0
Date:
Tuesday, November 12, 2013
Sheet
6
of
17

VGA INPUT

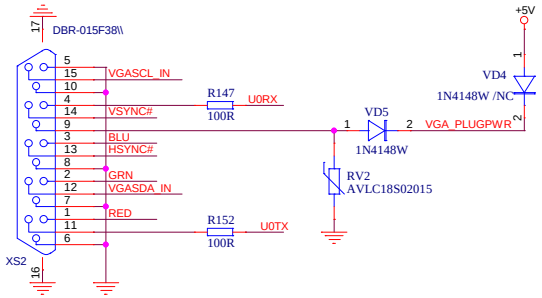

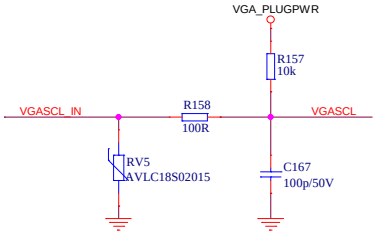

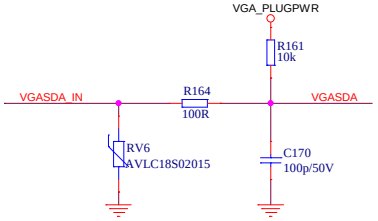

Close to VGA CONN. / Close to MT5651

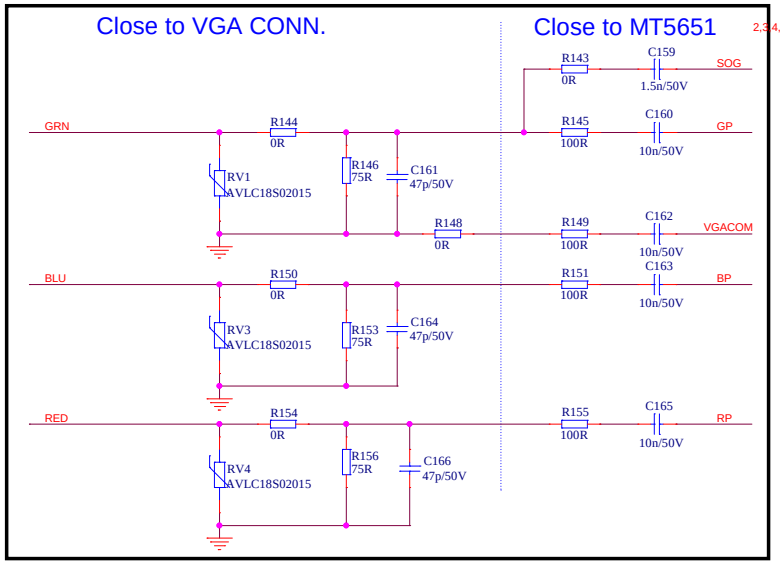

2,3,4,5,6,8,9,10,11,12,13,14,15,16,17
2,5,6,8,9,10,12,14,15,16,17

	GND	GND
	+5V	+5V
8	HSYNC	HSYNC
8	VSYNC	VSYNC
8	RP	RP
8	GP	GP
8	BP	BP
8	VGACOM	VGACOM
8	SOG	SOG
8	VGASDA	VGASDA
8	VGASCL	VGASCL
9	VGA_L_IN	VGA_L_IN
9	VGA_R_IN	VGA_R_IN
3	U0RX	U0RX
3	U0TX	U0TX

VGA AUDIO INPUT

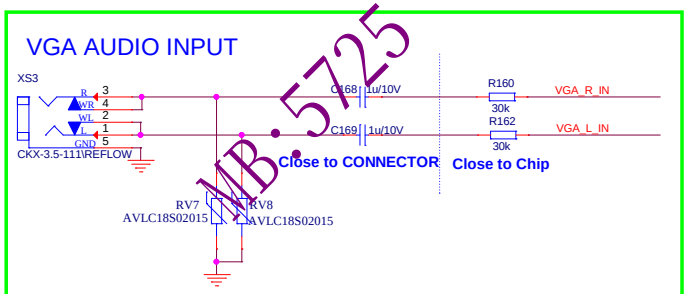

MB.5725

ZHIYUNAN-20130114 更改通孔回流封装耳机端子

VGA SYNC SLICER

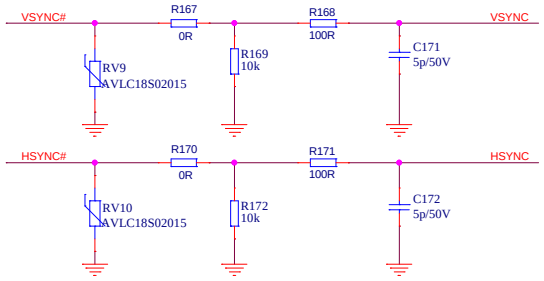

Hisense Electric Co.,LTD			
Title	VGA INPUT		
Size	Document Number		Rev
A3	MT5652		1.0
Date:	Tuesday, November 12, 2013	Sheet 7 of 17	

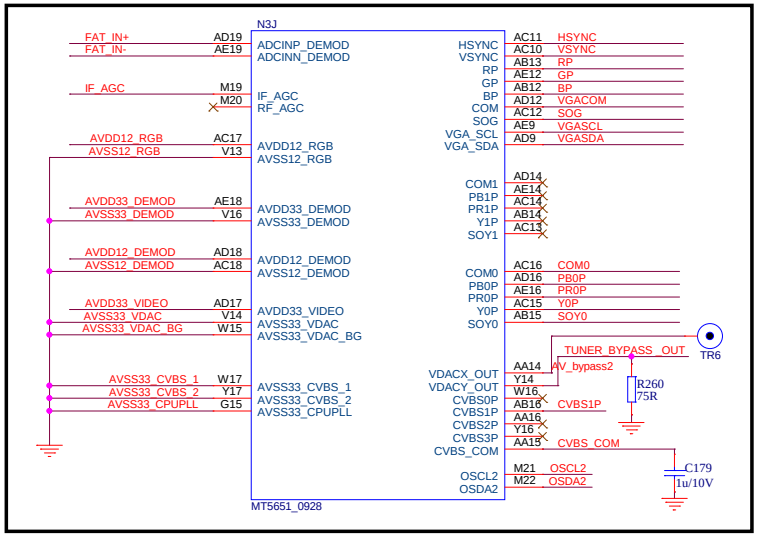

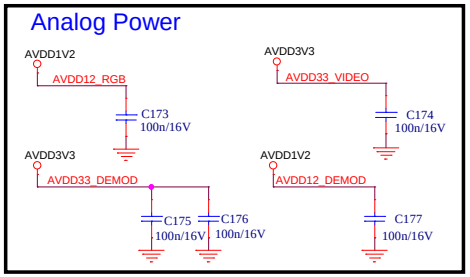

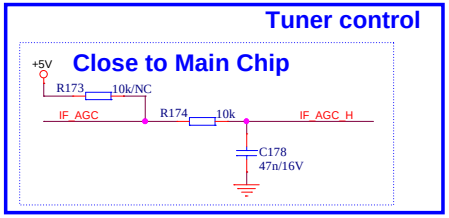

2,3,4,5,6,7,9,10,11,12,13,14,15,16,17	GND	GND
2,5,6,7,9,10,12,14,15,16,17	+5V	+5V
2,3,4,6,9,10,13	AVDD3V3	AVDD3V3
2,10,12	AVDD1V2	AVDD1V2
7	HSYNC	HSYNC
7	VSYNC	VSYNC
7	RP	RP
7	GP	GP
7	BP	BP
7	VGACOM	VGACOM
7	SOG	SOG
7	VGASDA	VGASDA
7	VGASCL	VGASCL
9	AINL_YPBPR	AINL_YPBPR
9	AINR_YPBPR	AINR_YPBPR
14	IF_AGC_H	IF_AGC_H
14	FAT_IN-	FAT_IN-
14	FAT_IN+	FAT_IN+
13	OSCL2	OSCL2
13	OSDA2	OSDA2
9	TUNER_BYPASS_OUT	TUNER_BYPASS_OUT

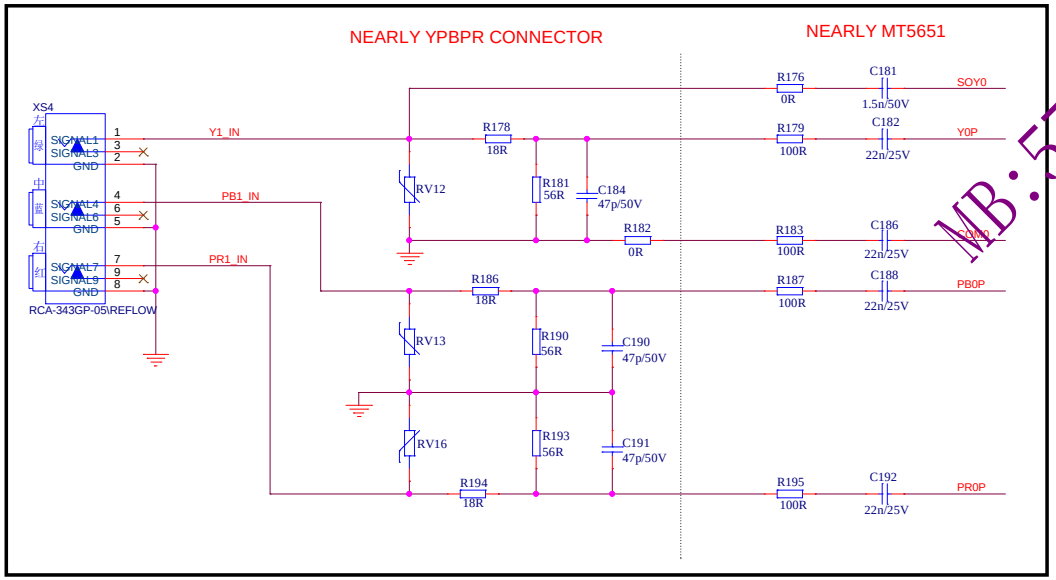

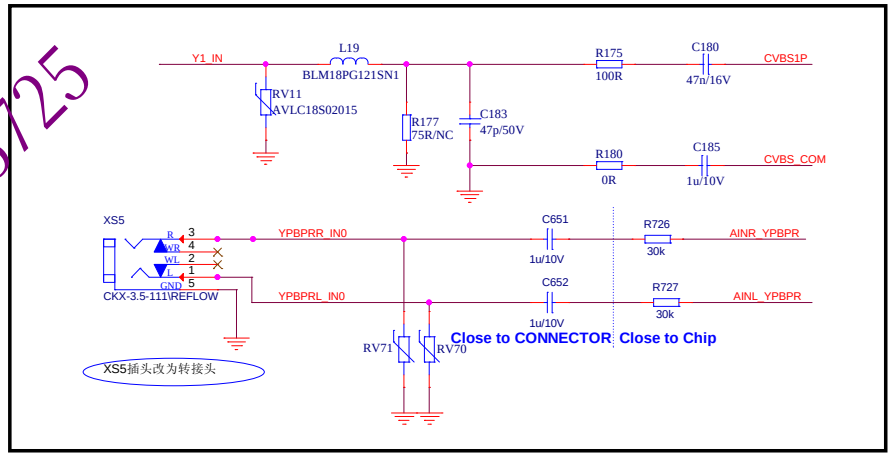

MB:5725

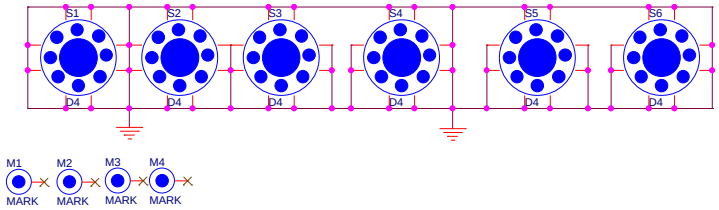

Hisense Electric Co.,LTD		
Title: YPBPR/AV INPUT		
Size: A3	Document Number: MT5652	Rev: 1.0
Date: Tuesday, November 12, 2013	Sheet 8 of 17	

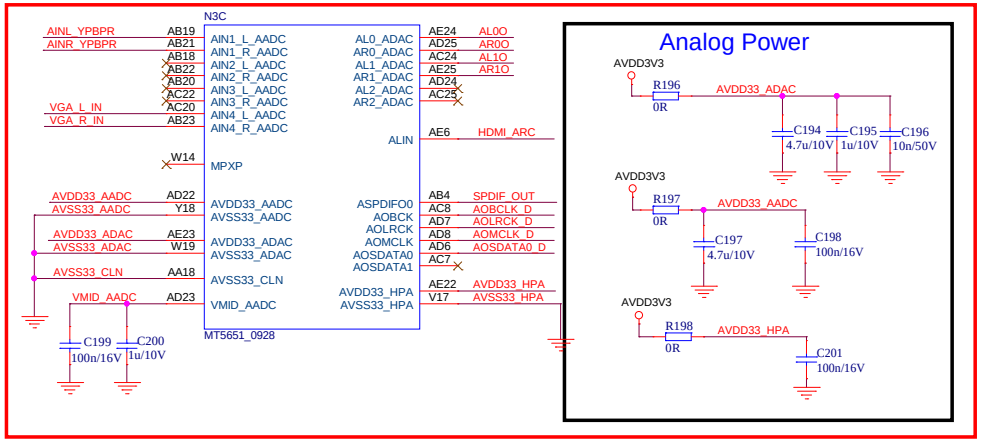

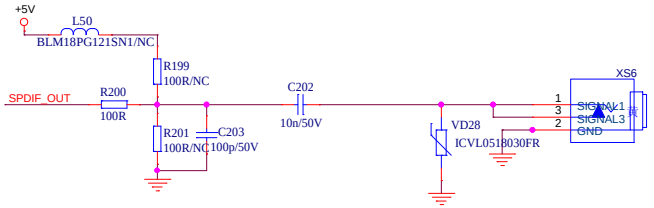

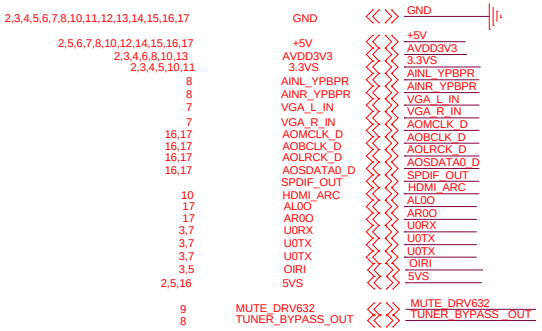

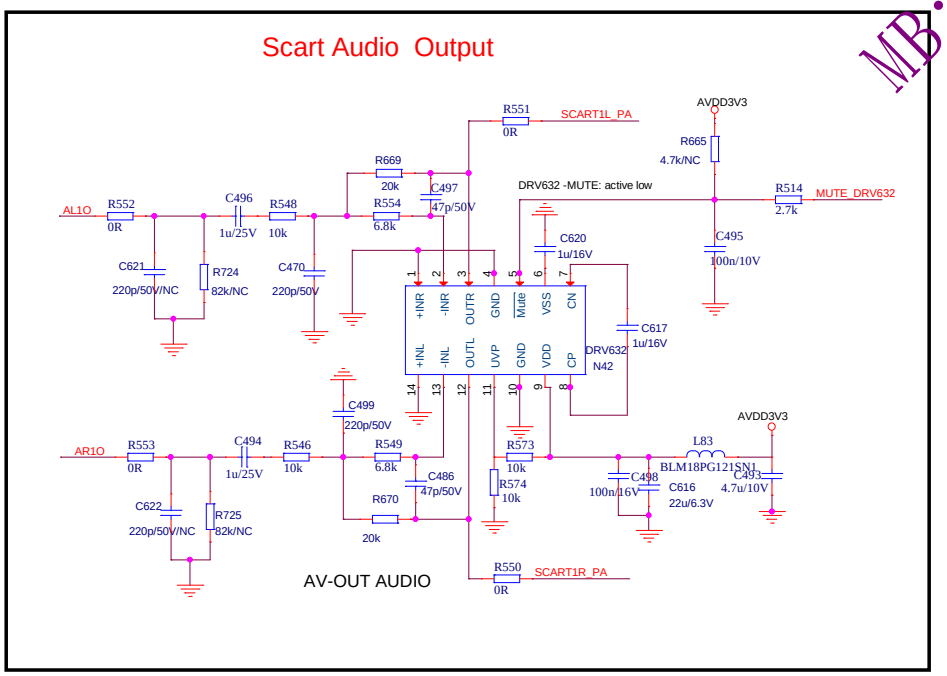

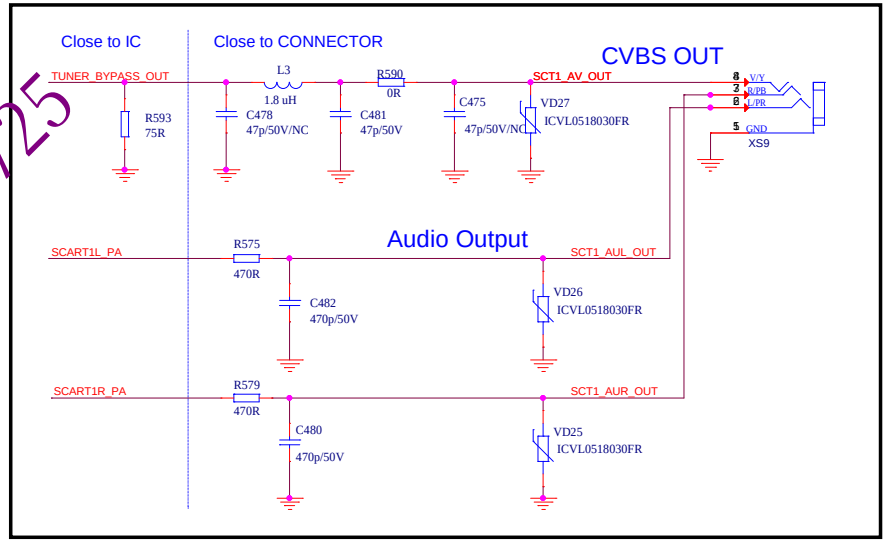

MB:5725

Hisense Electric Co.,LTD		
Title: AUDIO IN/OUT/COAXIAL OUT		
Size: A3	Document Number: MT5652	Rev: 1.0
Date: Tuesday, November 12, 2013	Sheet 9 of 17	

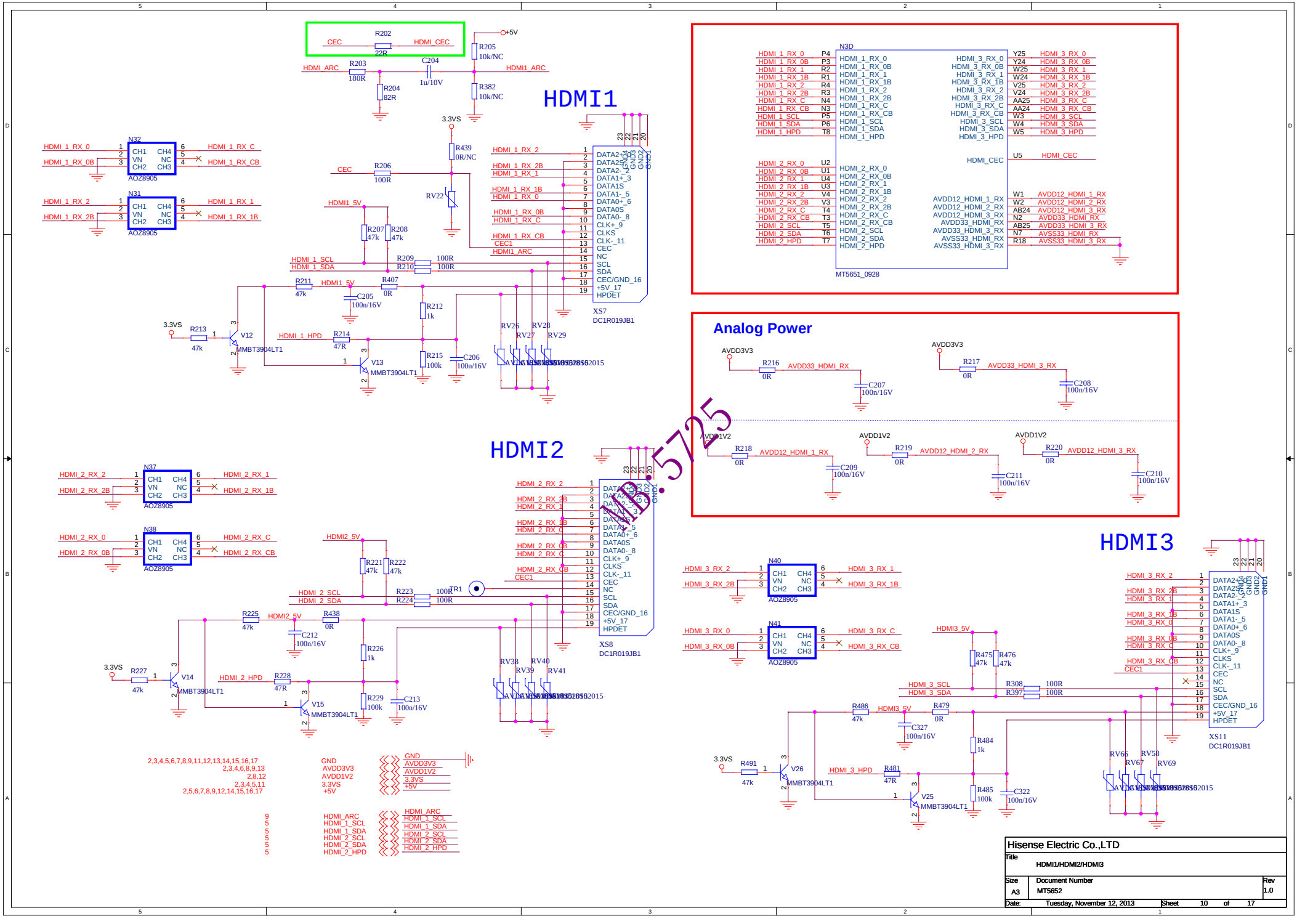
HDMI1
HDMI2
HDMI3
Analog Power
N3D
MT5651_0928
XS7
DC1R019JB1
XS8
DC1R019JB1
XS11
DC1R019JB1
N32
N31
N37
N38
N40
N41
AOZ8905
MMBT3904LT1
CEC
HDMI_CEC
HDMI_ARC
HDMI1_ARC
+5V
3.3VS
AVDD3V3
AVDD1V2
AVDD33_HDMI_RX
AVDD33_HDMI_3_RX
AVDD12_HDMI_1_RX
AVDD12_HDMI_2_RX
AVDD12_HDMI_3_RX
HDMI1_5V
HDMI2_5V
HDMI3_5V
HDMI_1_HPD
HDMI_2_HPD
HDMI_3_HPD
HDMI_1_SCL
HDMI_1_SDA
HDMI_2_SCL
HDMI_2_SDA
HDMI_3_SCL
HDMI_3_SDA
CEC1
TR1
2,3,4,5,6,7,8,9,11,12,13,14,15,16,17
2,3,4,6,8,9,13
2,8,12
2,3,4,5,11
2,5,6,7,8,9,12,14,15,16,17
GND
AVDD3V3
AVDD1V2
3.3VS
+5V
9
5
5
5
5
5
HDMI_ARC
HDMI_1_SCL
HDMI_1_SDA
HDMI_2_SCL
HDMI_2_SDA
HDMI_2_HPD
Hisense Electric Co.,LTD
Title
HDMI1/HDMI2/HDMI3
Size
A3
Document Number
MT5652
Rev
1.0
Date:
Tuesday, November 12, 2013
Sheet
10
of
17

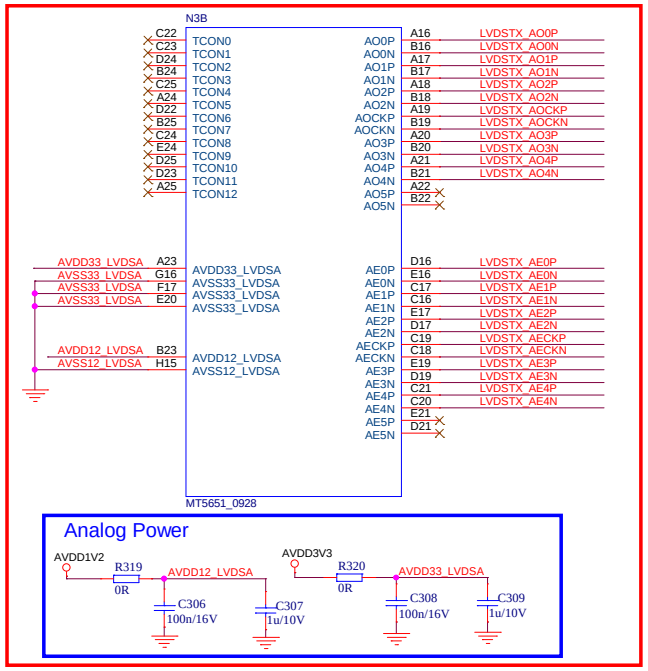

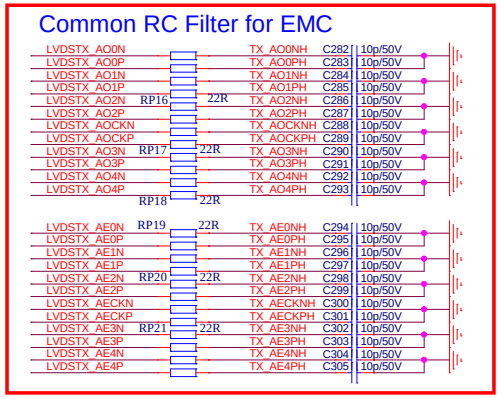

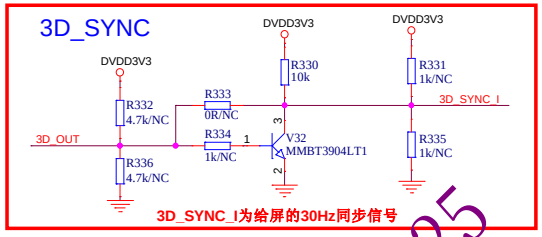

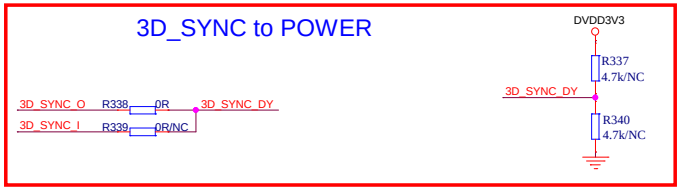

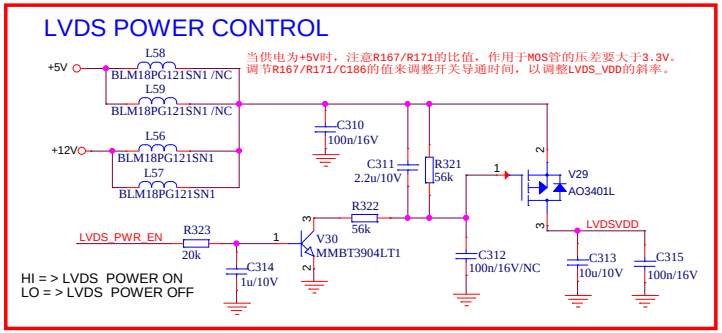

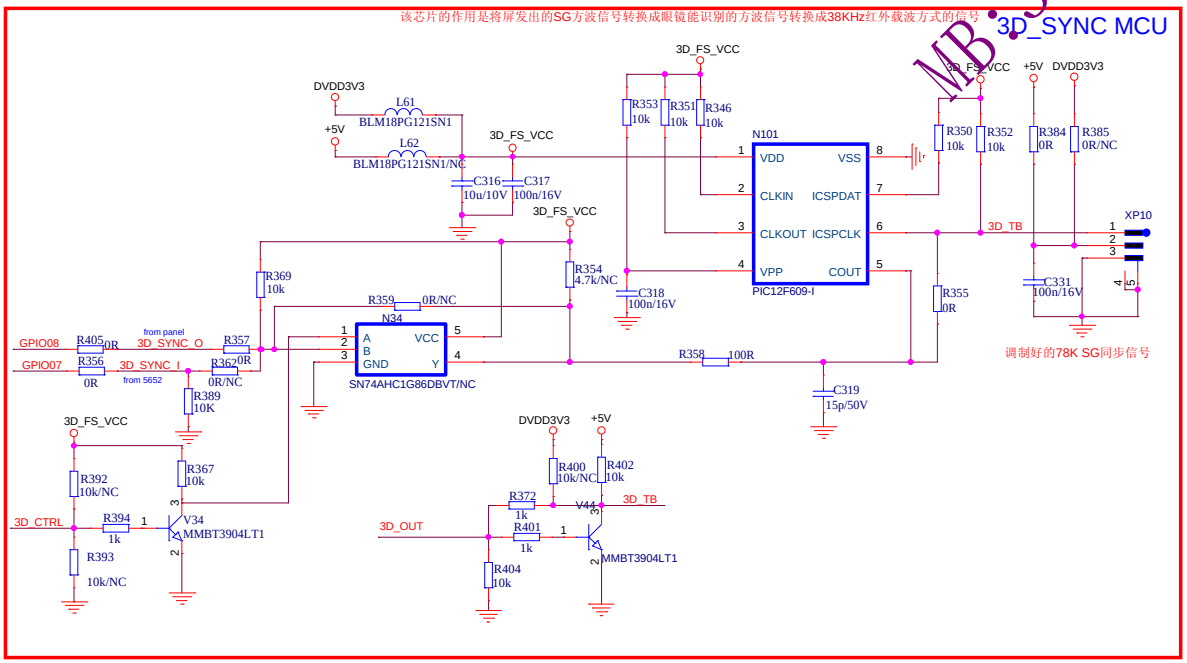

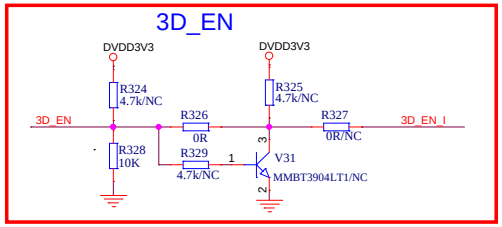

13	TX_AO0PH	TX_AO0PH	2,3,4,5,6,7,8,9,10,11,13,14,15,16,17	GND	GND		
13	TX_AO0NH	TX_AO0NH	2,5,6,7,8,9,10,14,15,16,17	+5V	+5V		
13	TX_AO1PH	TX_AO1PH	2,8,10	AVDD1V2	AVDD1V2		
13	TX_AO1NH	TX_AO1NH	2,3,5,11,16,17	DVDD3V3	DVDD3V3		
13	TX_AO2PH	TX_AO2PH	2,3,4,6,8,9,10,13	AVDD3V3	AVDD3V3		
13	TX_AO2NH	TX_AO2NH	2,13,16,17	+12V	+12V		
13	TX_AOCKPH	TX_AOCKPH	5	3D_TB	3D_TB		
13	TX_AOCKNH	TX_AOCKNH	4	3D_OUT	3D_OUT		
13	TX_AO3PH	TX_AO3PH	4	3D_CTRL	3D_CTRL		
13	TX_AO3NH	TX_AO3NH	4	LVDS_PWR_EN	LVDS_PWR_EN		
13	TX_AO4PH	TX_AO4PH	13	LVDSVDD	LVDSVDD		
13	TX_AO4NH	TX_AO4NH	4	3D_EN	3D_EN		
13	TX_AE0PH	TX_AE0PH	4,13	GPIO08	GPIO08		
13	TX_AE0NH	TX_AE0NH	12	3D_EN_I	3D_EN_I		
13	TX_AE1PH	TX_AE1PH	4,13	GPIO07	GPIO07		
13	TX_AE1NH	TX_AE1NH	13	3D_SYNC_O	3D_SYNC_O		
13	TX_AE2PH	TX_AE2PH	13	3D_SYNC_I	3D_SYNC_I		
13	TX_AE2NH	TX_AE2NH	2,12	3D_SYNC_DY	3D_SYNC_DY		
13	TX_AE3PH	TX_AE3PH					
13	TX_AE3NH	TX_AE3NH					
13	TX_AECKPH	TX_AECKPH					
13	TX_AECKNH	TX_AECKNH					
13	TX_AE4PH	TX_AE4PH					
13	TX_AE4NH	TX_AE4NH					

Hisense Electric Co.,LTD			
Title	LVDS POWER CONTROL		
Size A3	Document Number MT5652		Rev 1.0
Date: Tuesday, November 12, 2013	Sheet 11 of 17		

MB.5725

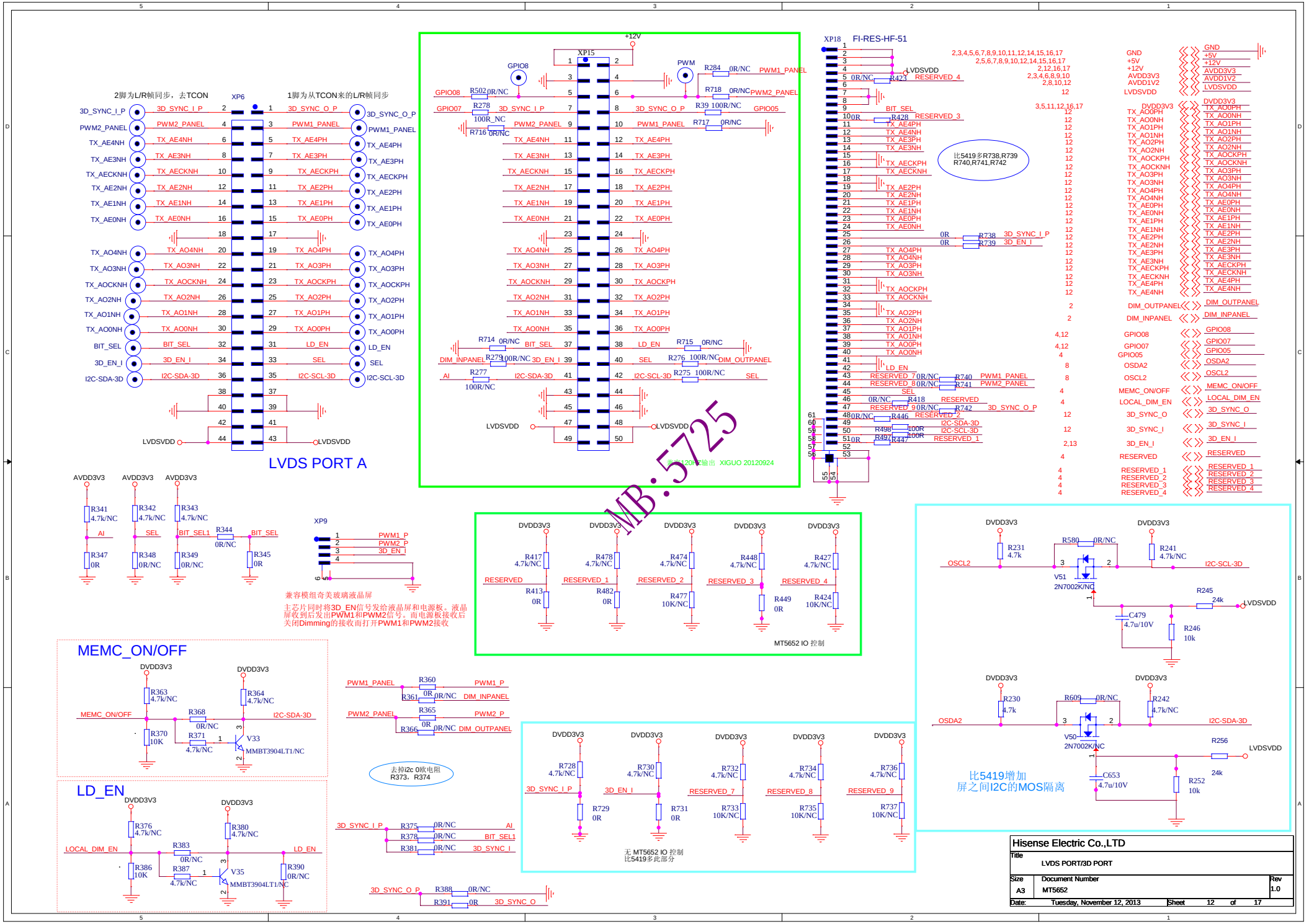
2脚为L/R帧同步，去TCON
1脚为从TCON来的L/R帧同步
XP6
LVDS PORT A
XP15
+12V
GPIO8
PWM
XP18
FI-RES-HF-51
比5419多R738,R739
R740,R741,R742
MB:5725
XP9
兼容模组奇美玻璃液晶屏
主芯片同时将3D_EN信号发给液晶屏和电源板。液晶屏收到后发出PWM1和PWM2信号。而电源板接收后关闭Dimming的接收而打开PWM1和PWM2接收
MT5652 IO 控制
MEMC_ON/OFF
LD_EN
去掉i2c 0欧电阻
R373、R374
无 MT5652 IO 控制
比5419多此部分
比5419增加
屏之间I2C的MOS隔离
Hisense Electric Co.,LTD
Title
LVDS PORT/3D PORT
Size
A3
Document Number
MT5652
Rev
1.0
Date: Tuesday, November 12, 2013
Sheet 12 of 17

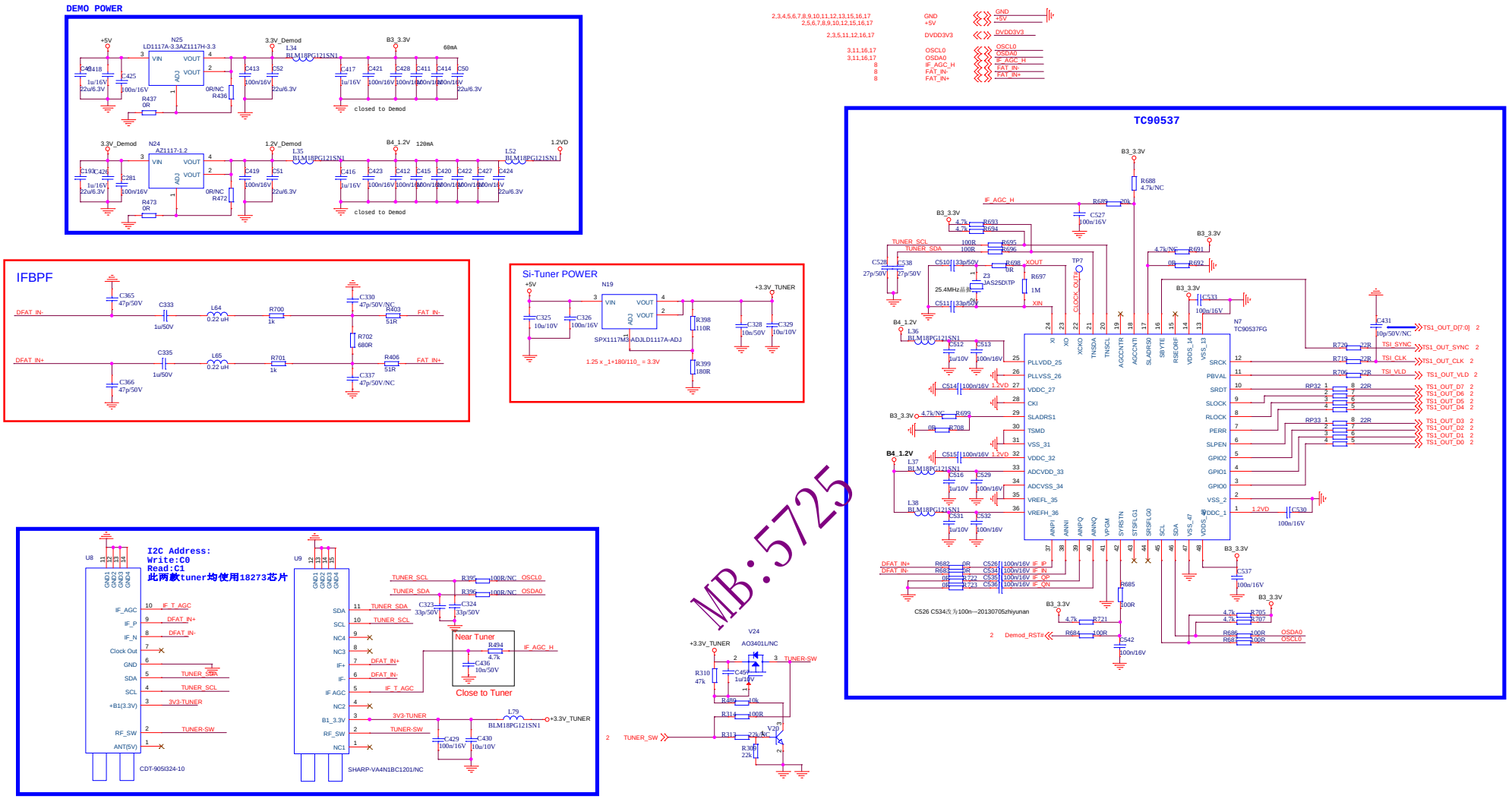

Hisense Electric Co.,LTD		
Title	SILICON TUNER	
Size A2	Document Number MT5652	Rev 1.0
Date: Tuesday, November 12, 2013	Sheet 13 of 17	

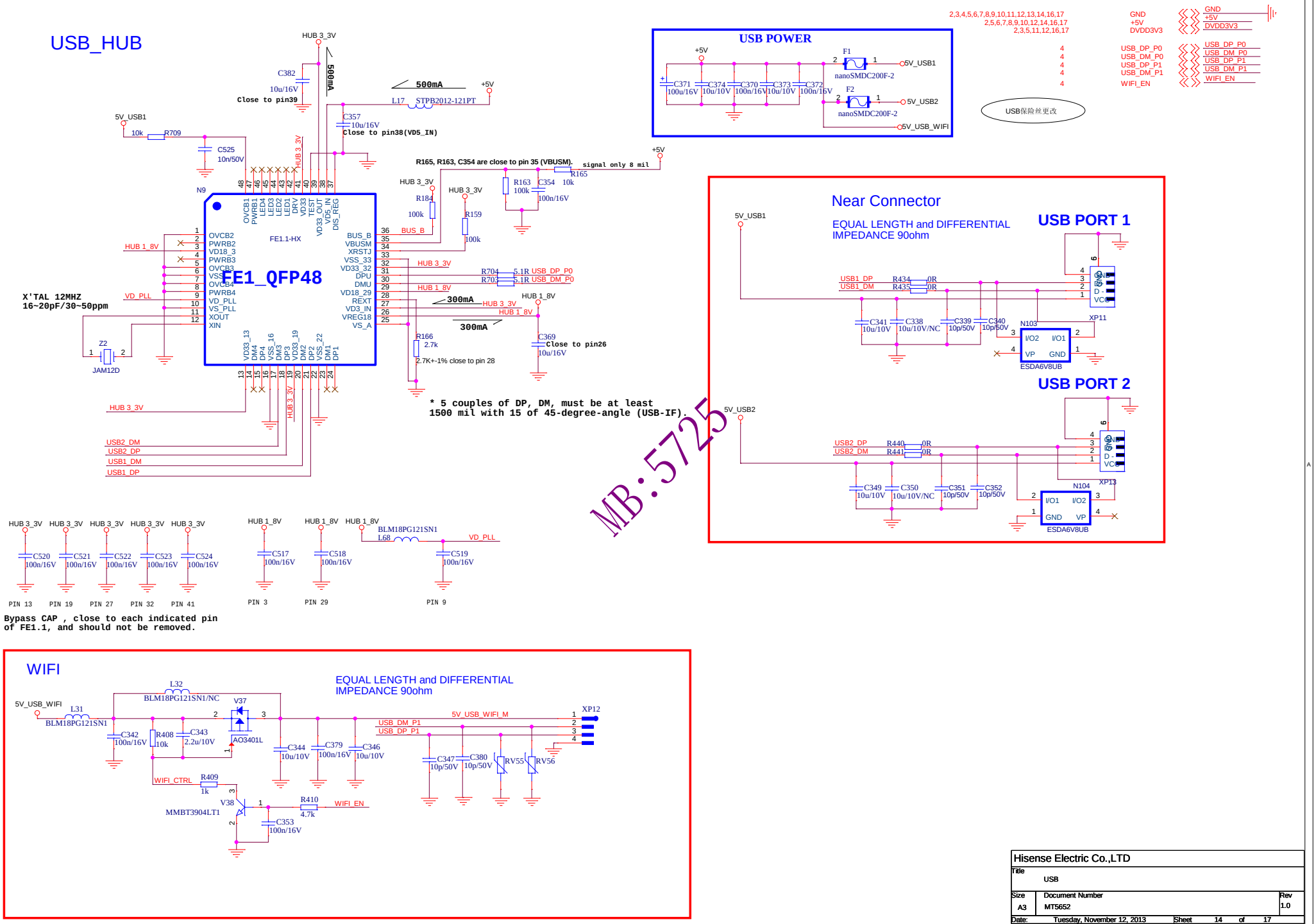

Hisense Electric Co.,LTD			
Title: USB			
Size: A3	Document Number: MT5652		Rev: 1.0
Date: Tuesday, November 12, 2013	Sheet 14 of 17		

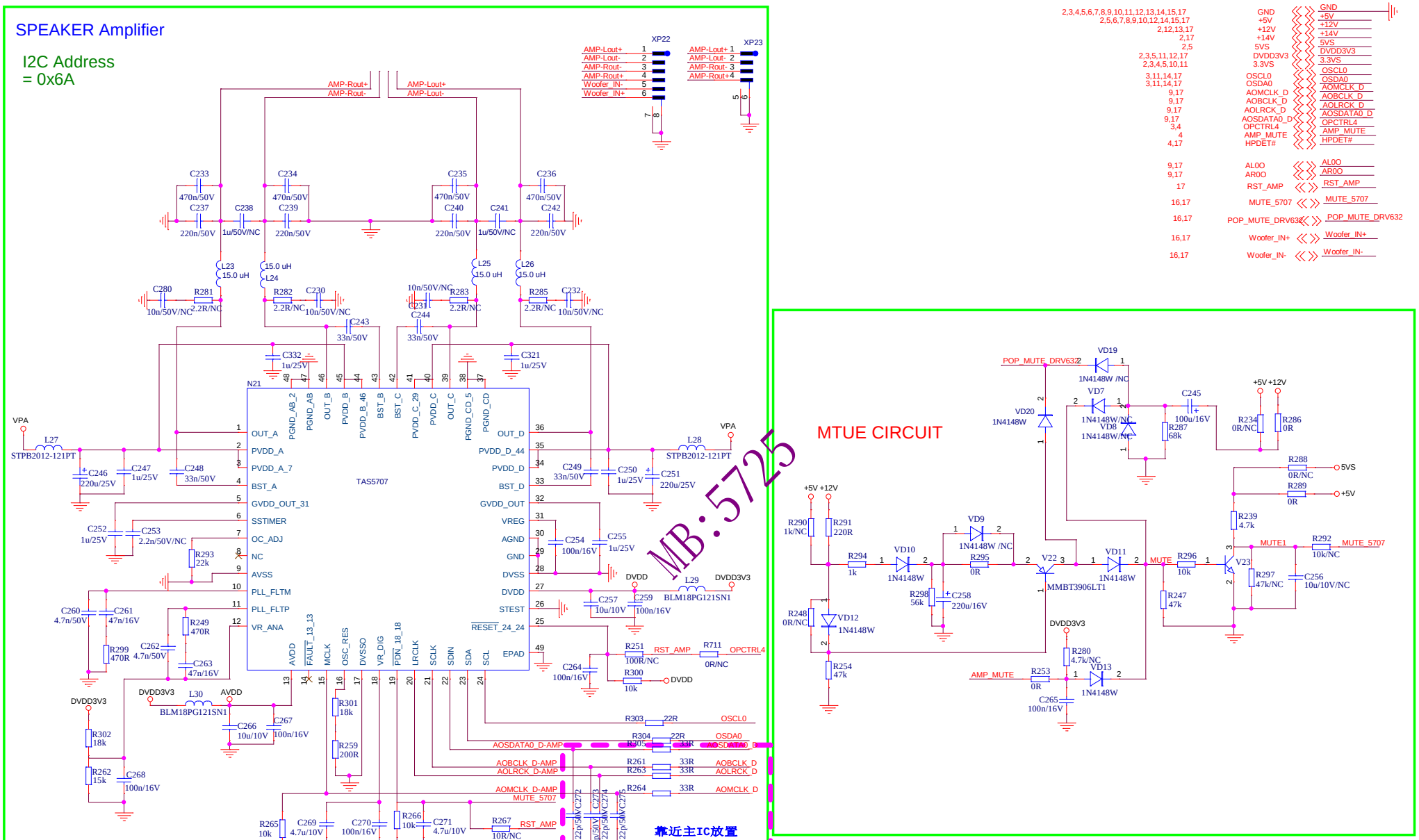

2,3,4,5,6,7,8,9,10,11,12,13,14,15,17	GND	GND
2,5,6,7,8,9,10,12,14,15,17	+5V	+5V
2,12,13,17	+12V	+12V
2,17	+14V	+14V
2,5	5VS	5VS
2,3,5,11,12,17	DVDD3V3	DVDD3V3
2,3,4,5,10,11	3.3VS	3.3VS
3,11,14,17	OSCL0	OSCL0
3,11,14,17	OSDA0	OSDA0
9,17	AOMCLK_D	AOMCLK_D
9,17	AOBCLK_D	AOBCLK_D
9,17	AOLRCK_D	AOLRCK_D
9,17	AOSDATA0_D	AOSDATA0_D
3,4	OPCTRL4	OPCTRL4
4	AMP_MUTE	AMP_MUTE
4,17	HPDET#	HPDET#
9,17	AL0O	AL0O
9,17	AR0O	AR0O
17	RST_AMP	RST_AMP
16,17	MUTE_5707	MUTE_5707
16,17	POP_MUTE_DRV632	POP_MUTE_DRV632
16,17	Woofer_IN+	Woofer_IN+
16,17	Woofer_IN-	Woofer_IN-

9,17	AOMCLK_D-AMP	AOMCLK_D-AMP
9,17	AOBCLK_D-AMP	AOBCLK_D-AMP
9,17	AOLRCK_D-AMP	AOLRCK_D-AMP
9,17	AOSDATA0_D-AMP	AOSDATA0_D-AMP

Hisense Electric Co.,LTD			
Title	SPEAKER/MUTE		
Size	Document Number		Rev
A3	MT5652		1.0
Date:	Tuesday, November 12, 2013	Sheet 15 of 17	

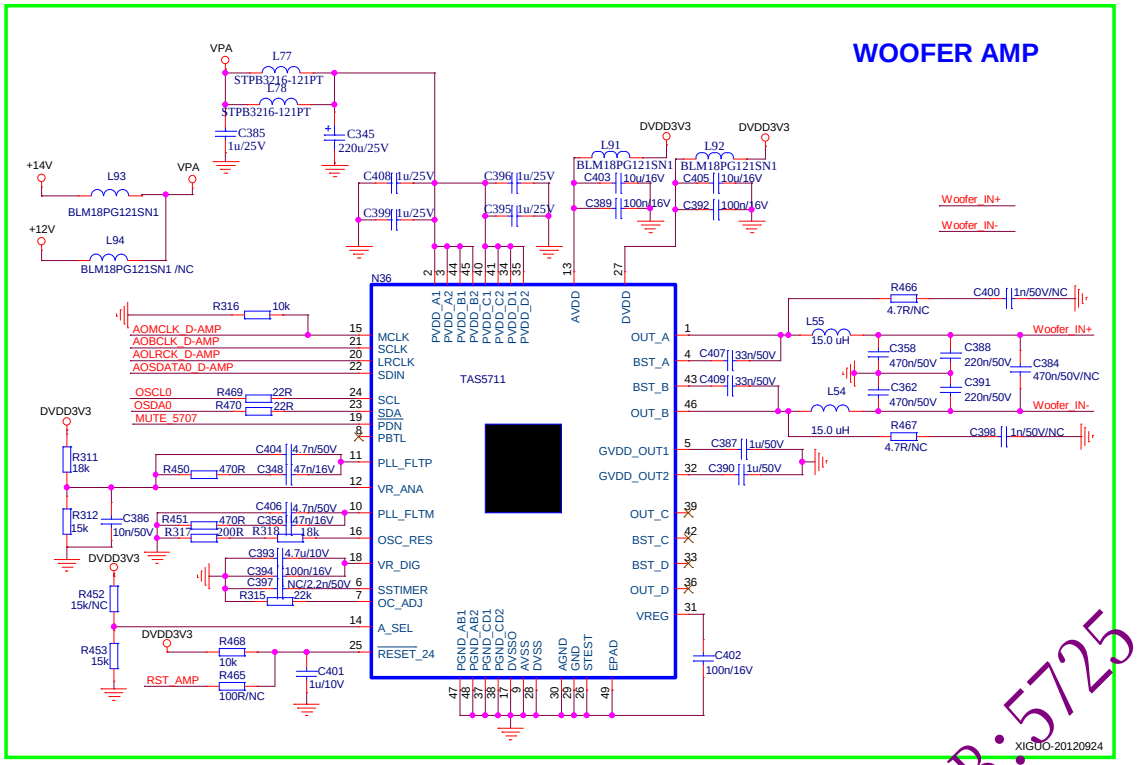

2,3,4,6,8,9,10,13	AVDD3V3	AVDD3V3
2,3,4,5,6,7,8,9,10,11,12,13,14,15,16	GND	GND
2,5,6,7,8,9,10,12,14,15,16	+5V	+5V
2,12,13,16	+12V	+12V
2	+14V	+14V
2,5,16	5VS	5VS
2,3,5,11,12,16	DVDD3V3	DVDD3V3
2,3,4,5,10,11	3.3VS	3.3VS
3,11,14,16	OSCL0	OSCL0
3,11,14,16	OSDA0	OSDA0
9,16	AOMCLK_D	AOMCLK_D
9,16	AOBCLK_D	AOBCLK_D
9,16	AOLRCK_D	AOLRCK_D
9,16	AOSDATA0_D	AOSDATA0_D
4	HPDET#	HPDET#
4	MUTE_HP	MUTE_HP
9	AL0O	AL0O
9	AR0O	AR0O
16	RST_AMP	RST_AMP
16,17	MUTE_5707	MUTE_5707
16,17	POP_MUTE_DRV632	POP_MUTE_DRV632
9	MUTE_DRV632	MUTE_DRV632
16,17	Woofer_IN+	Woofer_IN+
16,17	Woofer_IN-	Woofer_IN-
9,17	AOMCLK_D-AMP	AOMCLK_D-AMP
9,17	AOBCLK_D-AMP	AOBCLK_D-AMP
9,17	AOLRCK_D-AMP	AOLRCK_D-AMP
9,17	AOSDATA0_D-AMP	AOSDATA0_D-AMP
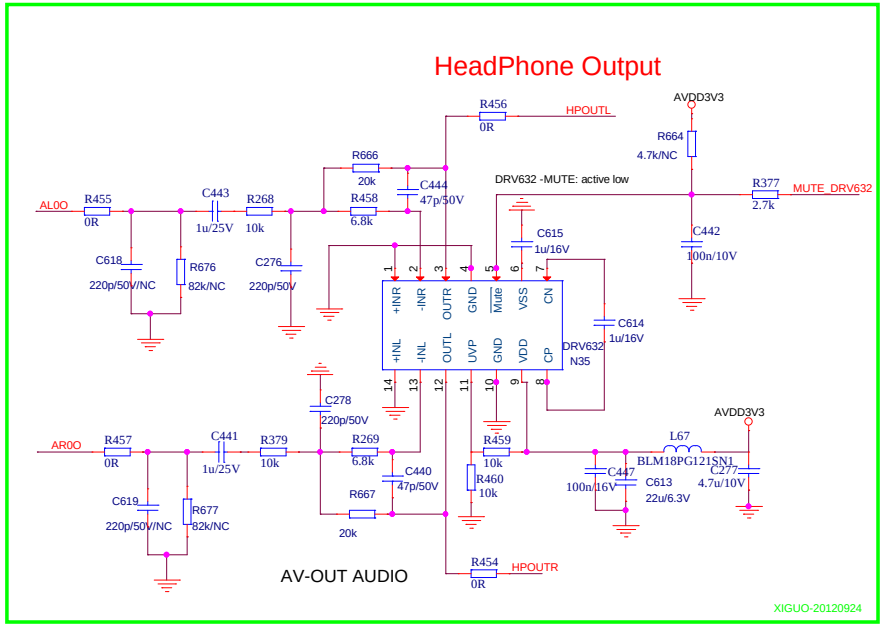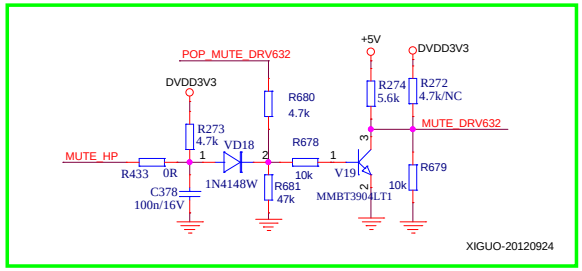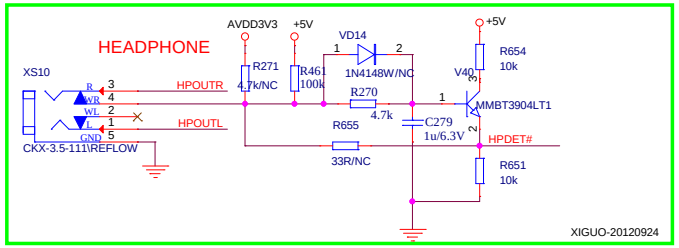
MB:5725