LCD Television

Service Manual

Chassis：　MTK5652

The difference is only in indication light

Product	Indication light
LTDN50K610NXWAM3D	white
LTDN50K610NXWAM3D（14)	blue
LTDN50K610NXWAM3D(19)	red

Ver 1.0

June，2014

Contents

Contents...- 2 -
Service Manual ....- 3 -
  1. Precautions and notices...- 3 -
    1.1 Warning...- 4 -
    1.2 Notes...- 7 -
  2. Product Function...- 9 -
    2.1 MTK5652 chassis includes:...- 9 -
    2.2 Specification ....- 10 -
    2.3 TV Front and Back ....- 11 -
    2.4 Remote Control...- 13 -
  3. Factory/Service OSD Menu and Adjustment...- 15 -
    3.1 To enter the Factory OSD Menu...- 15 -
    3.2 Factory OSD Menu...- 15 -
    3.3 Designer Menu...- 18 -
  4. Software Upgrading...- 20 -
    4.1 USB Software Upgrading directly...- 20 -
    4.2 USB upgrading unsuccessfully...- 20 -
    4.3 Upgrading with the FlashTool0.6.0.exe...- 23 -
    4.4 Network updating ....- 26 -
  5. Trouble shooting...- 32 -
    5.1 Troubleshooting for Remote Control...- 33 -
    5.2 Troubleshooting for Function Key...- 34 -
    5.3 TV won’t Power On...- 35 -
    5.4 Troubleshooting for Audio...- 36 -
    5.5 Troubleshooting for TV/VGA/HDMI input...- 37 -
    5.6 Troubleshooting for YPbPr input...- 38 -
    5.7 Troubleshooting for Video input...- 39 -
  6. Signals Block Diagram and power assign: ....- 40 -
  7. Schematic circuit diagram ....- 40 -
  8. Explode View...- 40 -

Service Manual

1. Precautions and notices

BEFORE SERVICING THE LCD TV, READ THE SAFETY PRECAUTIONS IN THIS MANUAL.

USE ONLY MANUFACTURER SPECIFIED REPLACEMENT PARTS WHEN SERVICING.

USE OF NON-AUTHORIZED PARTS WILL VOID THE MANUFACTURE'S WARRANTY

Proper service and repair is important to the safe, reliable operation of all Hisense Equipment. The service procedures recommended by Hisense and described in this Service Guide are effective methods of performing service operations. Some of these service operations require the use of tools specially designed for the purpose. The special tools should be used when and as recommended.

It is important to note that this manual contains various CAUTIONS and NOTICES which should be carefully read in order to minimize the risk of personal injury to service personnel. The possibility exists that improper service methods may damage the equipment and pose risk of personal injury

. It is also important to understand that these CAUTIONS and NOTICES ARE NOT EXHAUSTIVE. Service should only be performed by an experienced electronics techician trained in the proper Television safety and service methods and procedures Hereafter throughout this manual, HISENSE will be referred to.

1.1 Warning

1.1.1

Critical components having special safety characteristics are identified with a ⚠ by the Ref. No. in the parts list. Use of non-manufacturer's recommended parts may create shock, fire, or other hazards.Under no circumstances should the original design be modified or altered without written permission from RCA. Hisense Eassumes no liability, express or implied, arising out of any unauthorized modification of design. Servicetech assumes all liability.

DANGER CAUTION

TO ENSURE THE CONTINUED RELIABILITY OF THIS PRODUCT, USE ONLY ORIGINAL MANUFACTURER'S REPLACEMENT PARTS, WHICH ARE LISTED WITH THEIR PART NUMBERS IN THE PARTS LIST SECTION OF THIS SERVICE GUIDE.

1.1.2.

All ICs and many other semiconductors are susceptible to electrostatic discharges (ESD). Careless handling during repair can reduce life drastically. When repairing, be sure to use anti-static table mats and properly use a grounding wrist stra. Keep components and tools also at this same potential.

IMPORTANT:

Always disconnect the power cord from AC outlet before replacing parts or modules.

1.1.3

To prevent electrical shock, use only a properly grounded 3 prong outlet or extension cord.

1.1.4

When replacement parts are required, be sure to use replacement parts specified by the manufacturer or have the same characteristics as the original part. Unauthorized substitutions may result in fire, electric shock, or other hazards and will void the manufacturer's warranty.

1.1.5

Safety regulations require that after a repair the set must be returned in its original condition. In addition, prior to closing set, check that:

-Note:

>All wire harnesses and flex cables are properly routed and secured with factory tape and/or mounted cable clamps.

> All cables and connectors are properly insulated and do not have any bare wires/lead exposed

1.1.6

(1) Do not supply a voltage higher than that specified to this product. This may

damage the product and may cause a fire.

(2) Do not use this product:

> High humidity areas

> In an area where any water could enter or splash into the unit.

High humidity and water could damage the product and cause fire.

(3) If a foreign substance (such as water, metal, or liquid) gets inside the panel module, immediately turn off the power. Continuing to use the product may cause fire or electric shock.

(4) If the product emits smoke, and abnormal smell, or makes an abnormal sound, immediately turn off the power. Continuing to use the product, it may cause fire or electric shock.

(5) Do not pull out or insert the power cable from/to an outlet with wet hands. It may cause electric shock.

(6) Do not damage or modify the power cable. It may cause fire or electric shock.

(7) If the power cable is damaged, or if the connector is loose, do not use the product: otherwise, this can lead to fire or electric shock.

(8) If the power connector or the connector of the power cable becomes dirty or dusty, wipe it with a dry cloth. Otherwise, this can lead to fire.

(9) Use only with the cart, stand, tripod, bracket, or table specified by the manufacturer, or sold with the apparatus. When a cart is used, use caution when moving the cart/apparatus combination to avoid injury from tip-over

1.2 Notes

Notes on Safe Handling of the LCD panel and during service

The work procedures shown with the Note indication are important for ensuring the safety of the product and the servicing work. Be sure to follow these instructions.

- Before starting the work, secure a sufficient working space.
- At all times other than when adjusting and checking the product, be sure to turn OFF the POWER Button and disconnect the power cable from the power source of the TV during servicing.
- To prevent electric shock and breakage of PC board, start the servicing work at least 30 seconds after the main power has been turned off. Especially when installing and removing the power board, start servicing at least 2 minutes after the main power has been turned off.
- While the main power is on, do not touch any parts or circuits other than the ones specified. If any connection other than the one specified is made between the measuring equipment and the high voltage power supply block, it can result in electric shock or may trip the main circuit breaker When installing the LCD module in, and removing it from the packing carton, be sure to have at least two persons perform the work.
- When the surface of the panel comes into contact with the cushioning materials, be sure to confirm that there is no foreign matter on top of the cushioning materials before the surface of the panel comes into contact with the cushioning materials. Failure to

observe this precaution may result in, the surface of the panel being scratched by foreign matter.

- Be sure to handle the circuit board by holding the large parts as the heat sink or transformer. Failure to observe this precaution may result in the occurrence of an abnormality in the soldered areas.
- Do not stack the circuit boards. Failure to observe this precaution may result in problems resulting from scratches on the parts, the deformation of parts, and short-circuits due to residual electric charge.
- Perform a safety check when servicing is completed. Verify that the peripherals of the serviced points have not undergone any deterioration during servicing. Also verify that the screws, parts and cables removed for servicing purposes have all been returned to their proper locations in accordance with the original setup.

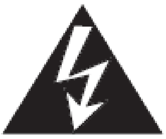

The lightning flash with arrowhead symbol, within an equilateral triangle is intended to alert the user to the presence of uninsulated dangerous voltage within the products enclosure that may be of sufficient magnitude to constitute a risk of electric shock.

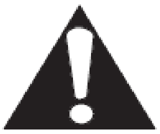

The exclamation point within an equilateral triangle is intended to alert the user to the presence of important operating and maintenance (servicing) instructions in the literature accompanying the set.

2. Product Function

2.1 MTK5652 chassis includes:

Product	Main & Power board	chassis	Panel	LVDS cable (main board-panel)
LTDN65XT880NXWAM3D	5744、5013	MT5652+6M40	INX*V650DK1-KS2	1、HX2-2X21KLBB600P\ROH 2、HX2-2X26KLBB450-HS\ROH
LTDN65K680XWAM3D	5744、5013	MT5652+6M40	INX*V650DK1-LS1	1、HX2-2X26KLBB450-HS\ROH 2、HX2-2X21KLBB600P\ROH
LTDN50K610NWAMN	5419、5652	MTK5652	HE500HF-B53(010)	FFC-51-594-1\ROH
LHD32N10WAM	5725、5268	MTK5652	HS*HE315GH-E77	HX2-2×20KLB400-BOE
LTDN42A300NWAM	5725、5030	MTK5652	HS*HE416GF-E01	FFC-51P-737\ROH
LHD39N16WAM	5725、5424	MTK5652	HE390HH-E51	HX2-2×20KLB400-BOE
LHD32K160WAMN	5649、5023	MTK5652	HS*HE315GH-E77	HX2-2X15KLB400P-CMO-3\ROH
LTDN50K600XWAMN3D	5649、4903	MTK5652	CMI*V500HK1-LS6(E4)	HX2-2X26KLBB450-HS\ROH
LTDN65XT780XWAM3D	5649、5275	MTK5652	HE650GFD-B51	FFC-51P-594\ROH
LTDN50K660RWAM3D	5649、5024	MTK5652	HE500HFR-B51(2000)	FFC-51-594-1\ROH
LTDN40K160WAMN	5649、4737	MTK5652	HE400GF-B31(1000)	FFC-51-625-2A\ROH
LTDN50K610NXWAM3D	5725、4903	MTK5652	V500HK1-LS6（E4）	HX2-2X26KLBB450-HS\ROH

2.2 Specification

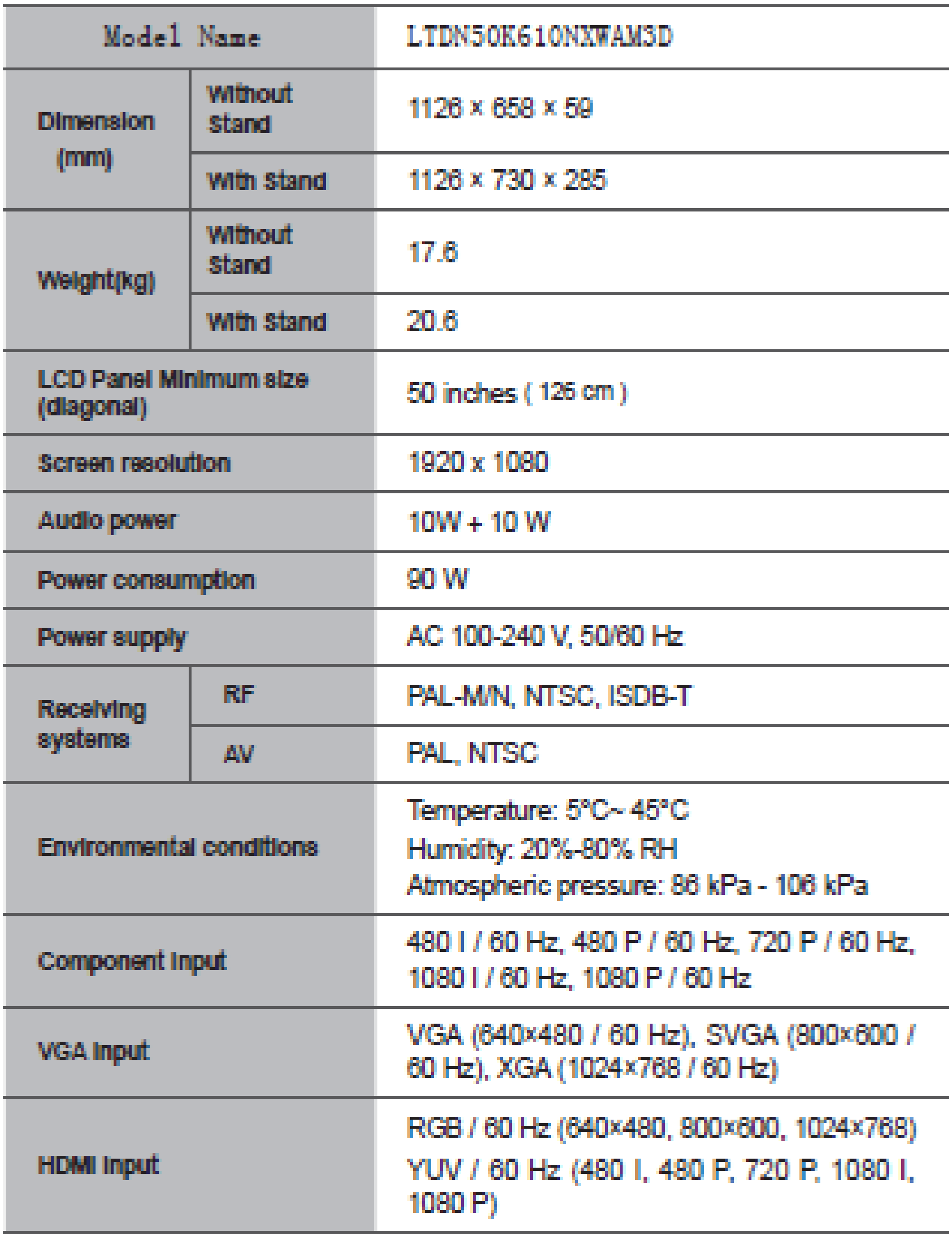

Model Name		LTDN50K610NXWAM3D
Dimension (mm)	Without stand	1126 × 658 × 59
	With stand	1126 × 730 × 285
Weight(kg)	Without stand	17.6
	With stand	20.6
LCD Panel Minimum size (diagonal)		50 inches (126 cm)
Screen resolution		1920 x 1080
Audio power		10W + 10 W
Power consumption		90 W
Power supply		AC 100-240 V, 50/60 Hz
Receiving systems	RF	PAL-M/N, NTSC, ISDB-T
	AV	PAL, NTSC
Environmental conditions		Temperature: 5°C~ 45°C Humidity: 20%-80% RH Atmospheric pressure: 86 kPa - 106 kPa
Component Input		480 I / 60 Hz, 480 P / 60 Hz, 720 P / 60 Hz, 1080 I / 60 Hz, 1080 P / 60 Hz
VGA Input		VGA (640×480 / 60 Hz), SVGA (800×600 / 60 Hz), XGA (1024×768 / 60 Hz)
HDMI Input		RGB / 60 Hz (640×480, 800×600, 1024×768) YUV / 60 Hz (480 I, 480 P, 720 P, 1080 I, 1080 P)

2.3 TV Front and Back

TV Front- LTDN50K610NXWAM3D

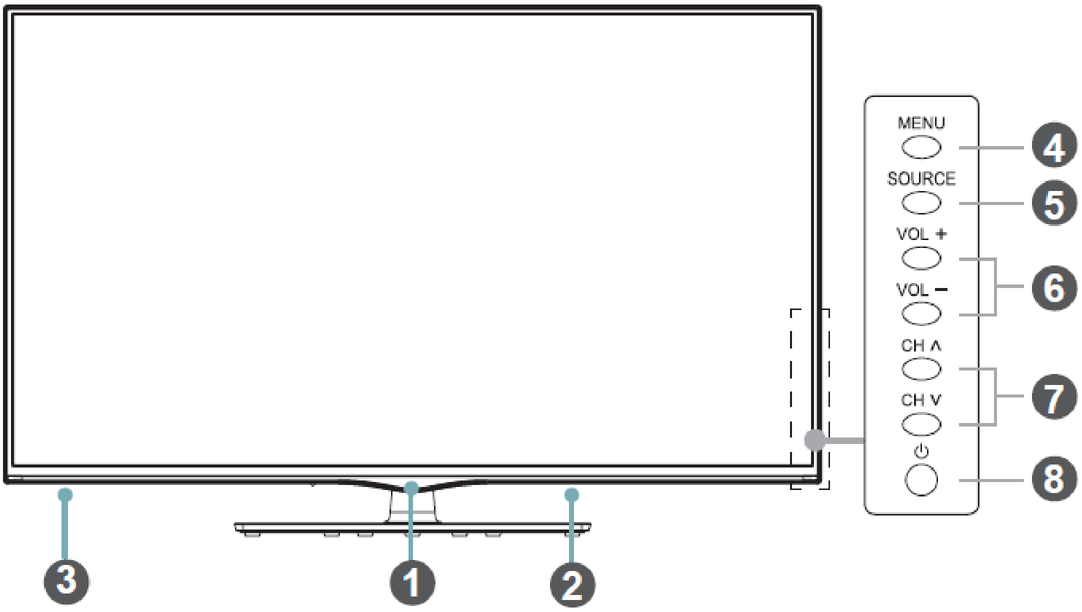

Item		Description
1	**Power indicator**	White light up in standby mode and the LED will be off when the TV is switched on.
2	**Power switch I/O**	Switch the I/O power on or off.
3	**Remote sensor and 3D emitter**	Receives remote signals from the remote control. Sends signals to 3D glasses during playback of 3D movies and TV shows.Do not put anything near the sensor, as its function may be affected.
4	**MENU**	Display menu settings.
5	**SOURCE**	Select among the different input signal sources.
6	**VOL + / VOL –**	Adjust the volume.
7	**CH ^ / CH v**	Switch between channels.
8	**Power button ⏻**	Turn on the TV from the standby mode or switch the TV back to standby mode.**Caution:** The TV continues to consume the power even in standby mode.Please turn the I/O Power off or unplug the power cord to save the power.

TV Rear-- LTDN50K610NXWAM3D

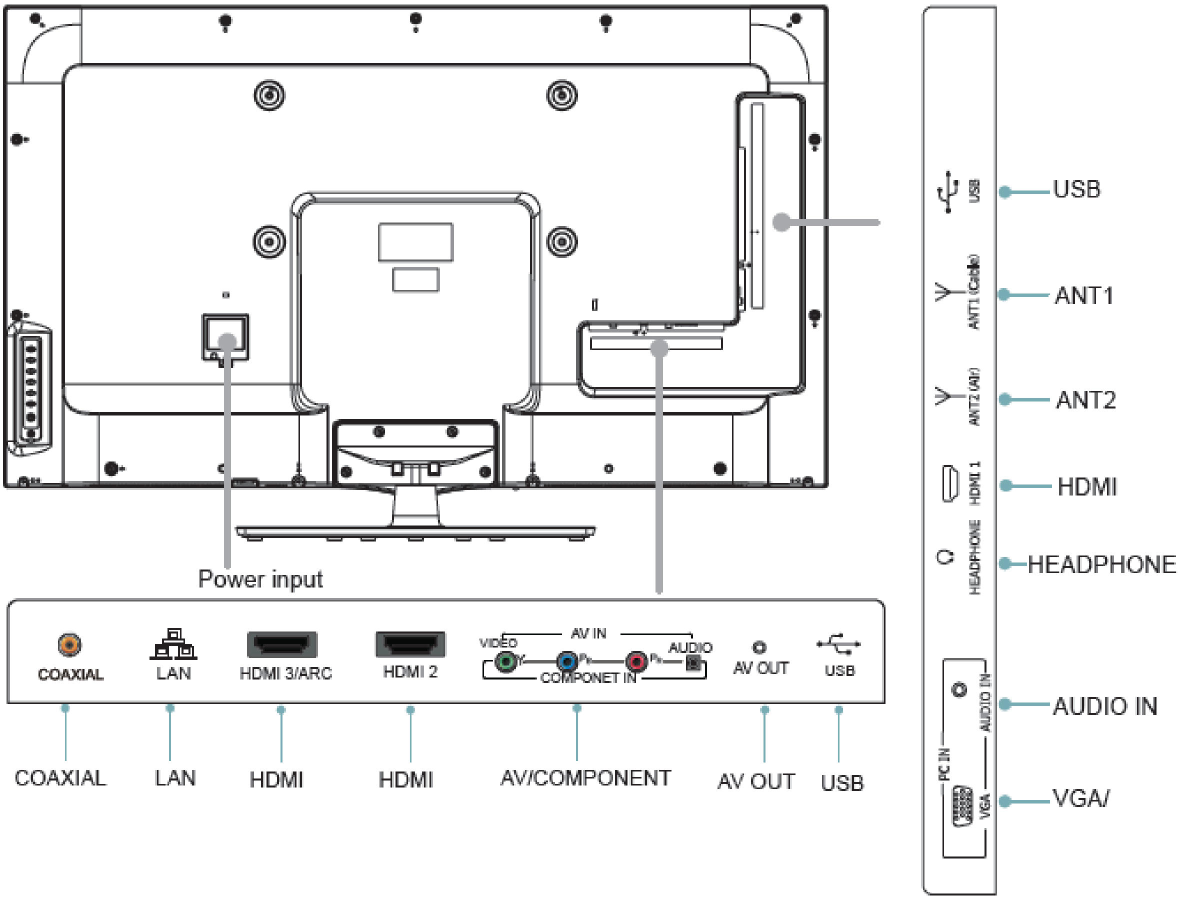
Power input
COAXIAL
LAN
HDMI 3/ARC
HDMI 2
VIDEO
AV IN
AUDIO
COMPONET IN
AV OUT
USB
COAXIAL
LAN
HDMI
HDMI
AV/COMPONENT
AV OUT
USB
USB
ANT1 (Cable)
ANT2 (Air)
HDMI 1
HEADPHONE
AUDIO IN
PC IN
VGA
USB
ANT1
ANT2
HDMI
HEADPHONE
AUDIO IN
VGA/

Some external devices impossible insert to this set for individual difference. Please replace with appropriate external signal cable or increase the adapter to match with the port in such case.

Item	***Description***
ANT	Connect an antenna or cable TV to this jack.
HDMI	HDMI provides an uncompressed, all digital audio/video interface between this TV and any HDMI-device.
COMPONENT	Connect to a DVD player, Digital Set-Top-Box, or other A/V devices with component (YP_BP_R) video and audio output jacks.
AV	Connect to the composite video and audio (L/R) output jacks on external video devices.
VGA/VGA AUDIO IN	Connect to a PC or other devices with a VGA interface.
AV OUT	Connect to external devices with video input function and transmit the video signals being played to theses devices.
HEADPHONE	Connect headphone for private listening.
COAXIAL	Connect to an external digital audio device.
USB	Port for Digital Media Player.
LAN	Connect an ethernet cable to access a Network or the Internet.

2.4 Remote Control

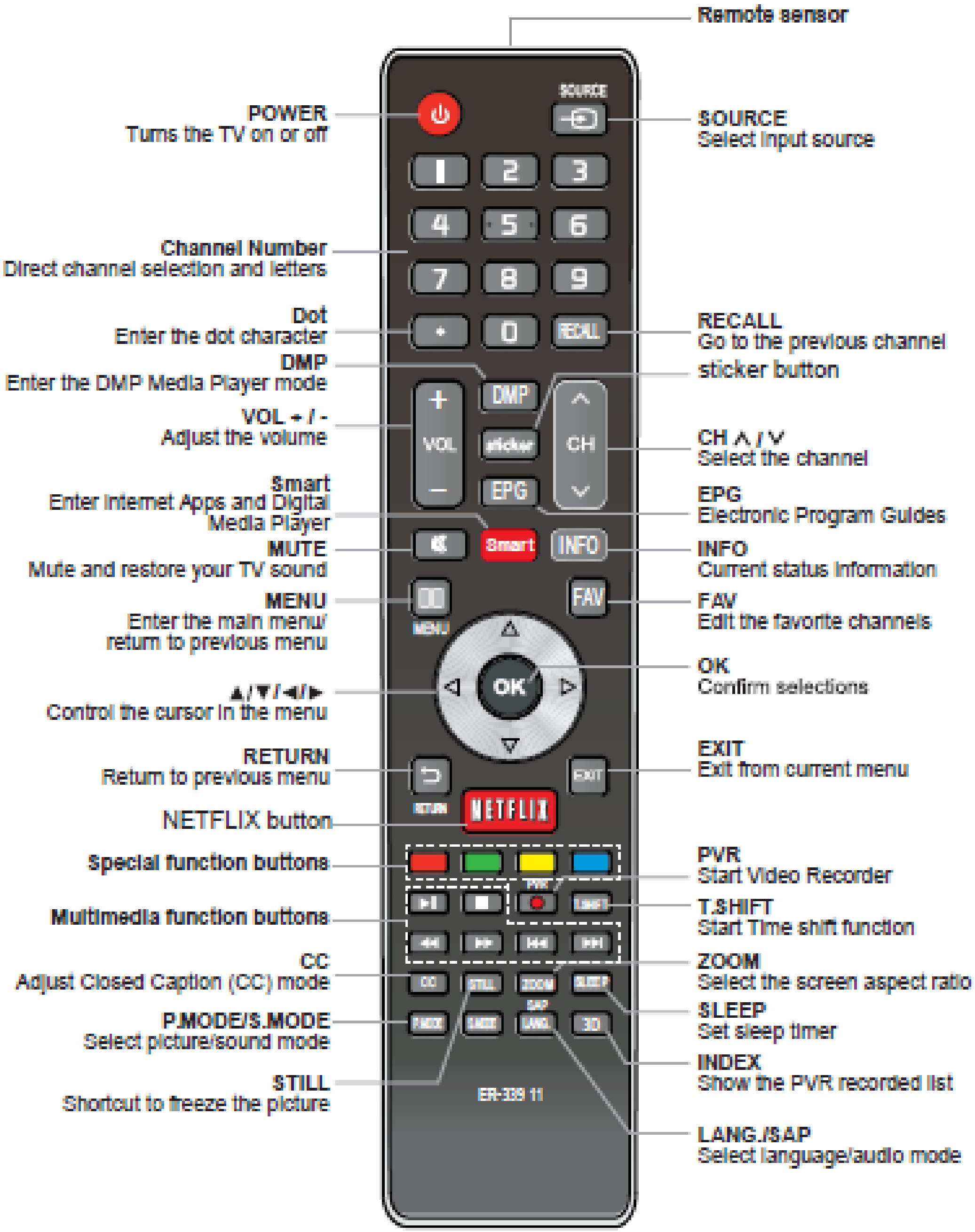
Remote sensor
POWER
Turns the TV on or off
SOURCE
Select input source
Channel Number
Direct channel selection and letters
Dot
Enter the dot character
RECALL
Go to the previous channel
DMP
Enter the DMP Media Player mode
sticker button
VOL + / -
Adjust the volume
CH ∧ / ∨
Select the channel
Smart
Enter Internet Apps and Digital Media Player
EPG
Electronic Program Guides
MUTE
Mute and restore your TV sound
INFO
Current status information
MENU
Enter the main menu/ return to previous menu
FAV
Edit the favorite channels
OK
Confirm selections
▲/▼/◄/►
Control the cursor in the menu
RETURN
Return to previous menu
EXIT
Exit from current menu
NETFLIX button
Special function buttons
PVR
Start Video Recorder
Multimedia function buttons
T.SHIFT
Start Time shift function
CC
Adjust Closed Caption (CC) mode
ZOOM
Select the screen aspect ratio
P.MODE/S.MODE
Select picture/sound mode
SLEEP
Set sleep timer
STILL
Shortcut to freeze the picture
INDEX
Show the PVR recorded list
LANG./SAP
Select language/audio mode
SOURCE
1
2
3
4
5
6
7
8
9
•
0
RECALL
DMP
sticker
EPG
VOL
CH
Smart
INFO
MENU
FAV
OK
RETURN
EXIT
NETFLIX
PVR
T.SHIFT
CC
STILL
ZOOM
SLEEP
P.MODE
S.MODE
SAP
LANG.
3D
ER-33911

Main board layou t (5725)

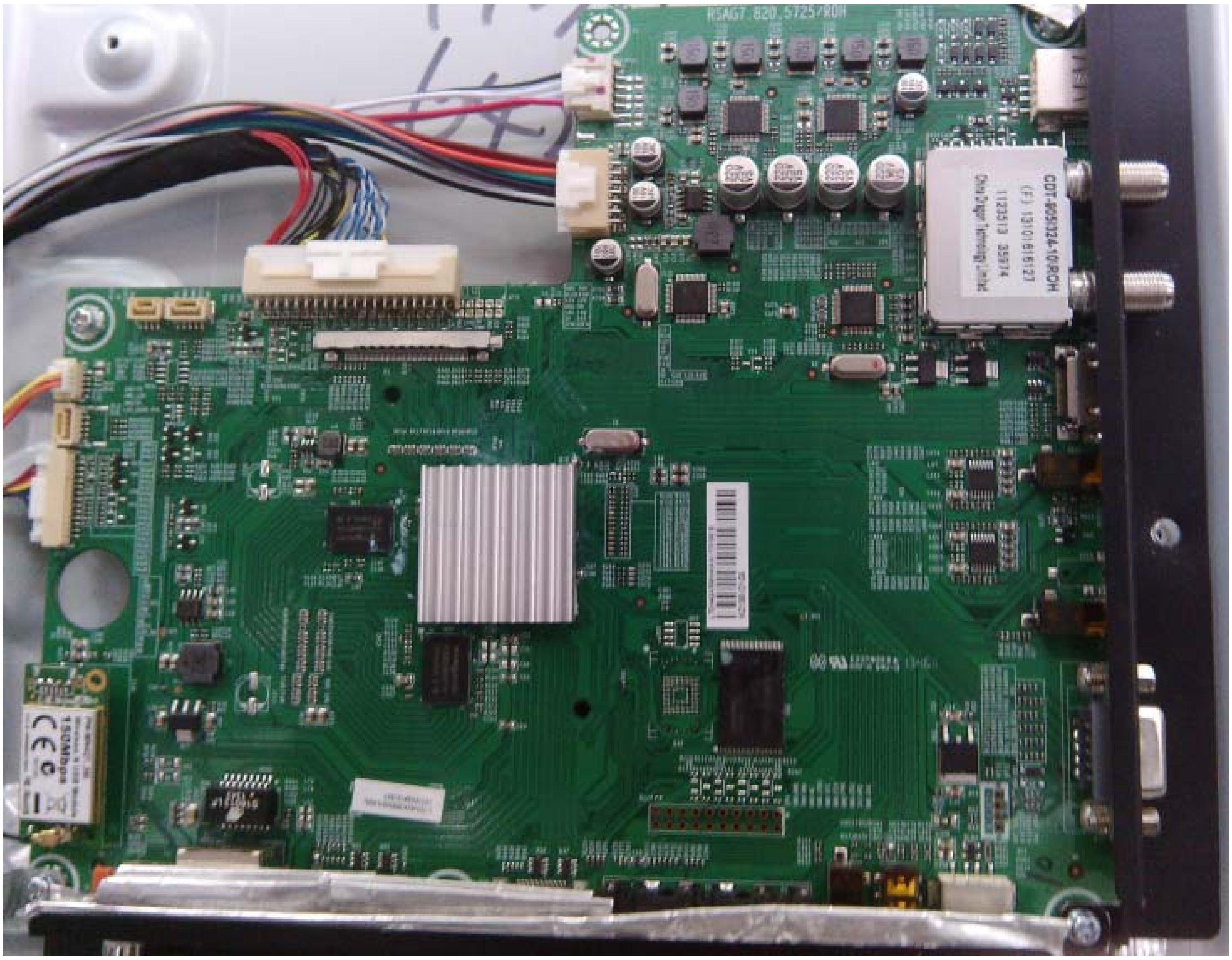

Detail description look up the quick setup guide, please.

3. Factory/Service OSD Menu and Adjustment

3.1 To enter the Factory OSD Menu

With user's RC

1. Power TV On
2. Press Menu button and call up User OSD Menu
3. Select Audio-> Balance, when Balance is "0"
4. Enter 1->9->6->9 in sequence.
   Note: If necessary, re-enter number keys.
5. Factory OSD appears.
6. Press Menu again and leave factory OSD.

3.2 Factory OSD Menu

Take LTDN50K660RWAM3D for example

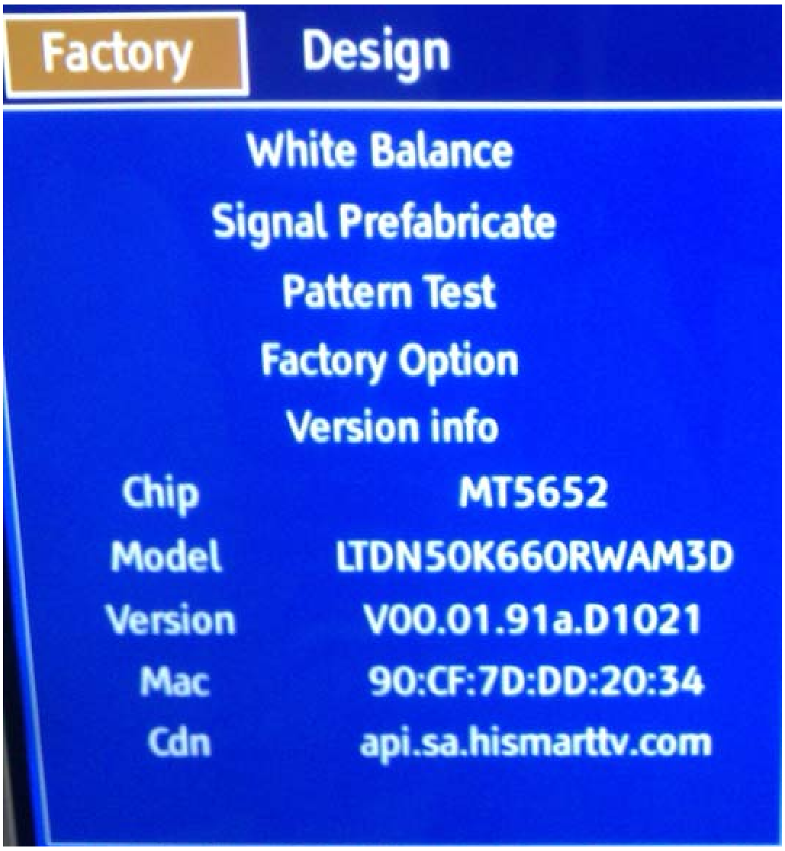
Factory
Design
White Balance
Signal Prefabricate
Pattern Test
Factory Option
Version info

Chip MT5652
Model LTDN50K660RWAM3D
Version V00.01.91a.D1021
Mac 90:CF:7D:DD:20:34
Cdn api.sa.hismarttv.com

3.2.1 White Balance

Note: Different source has different WB values. Before adjusting, please change to desired source.

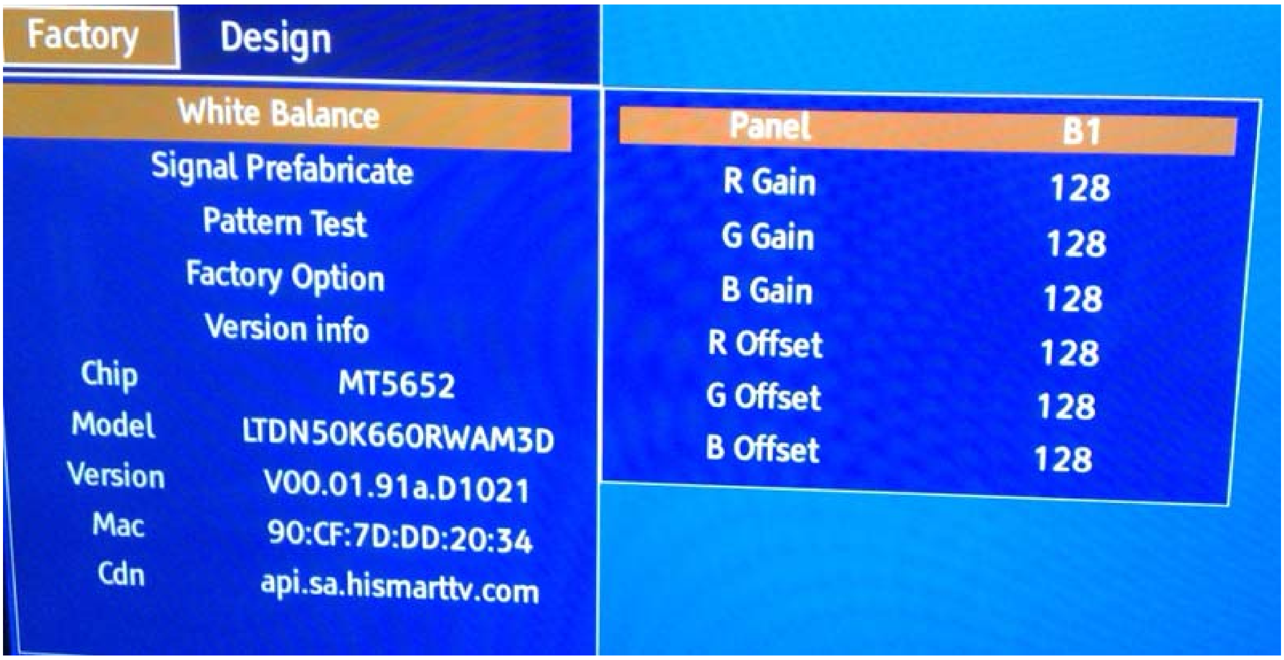
Factory
Design
White Balance
Signal Prefabricate
Pattern Test
Factory Option
Version info

Chip MT5652
Model LTDN50K660RWAM3D
Version V00.01.91a.D1021
Mac 90:CF:7D:DD:20:34
Cdn api.sa.hismarttv.com

Panel	B1
R Gain	128
G Gain	128
B Gain	128
R Offset	128
G Offset	128
B Offset	128

3.2.2 Signal prefabricate

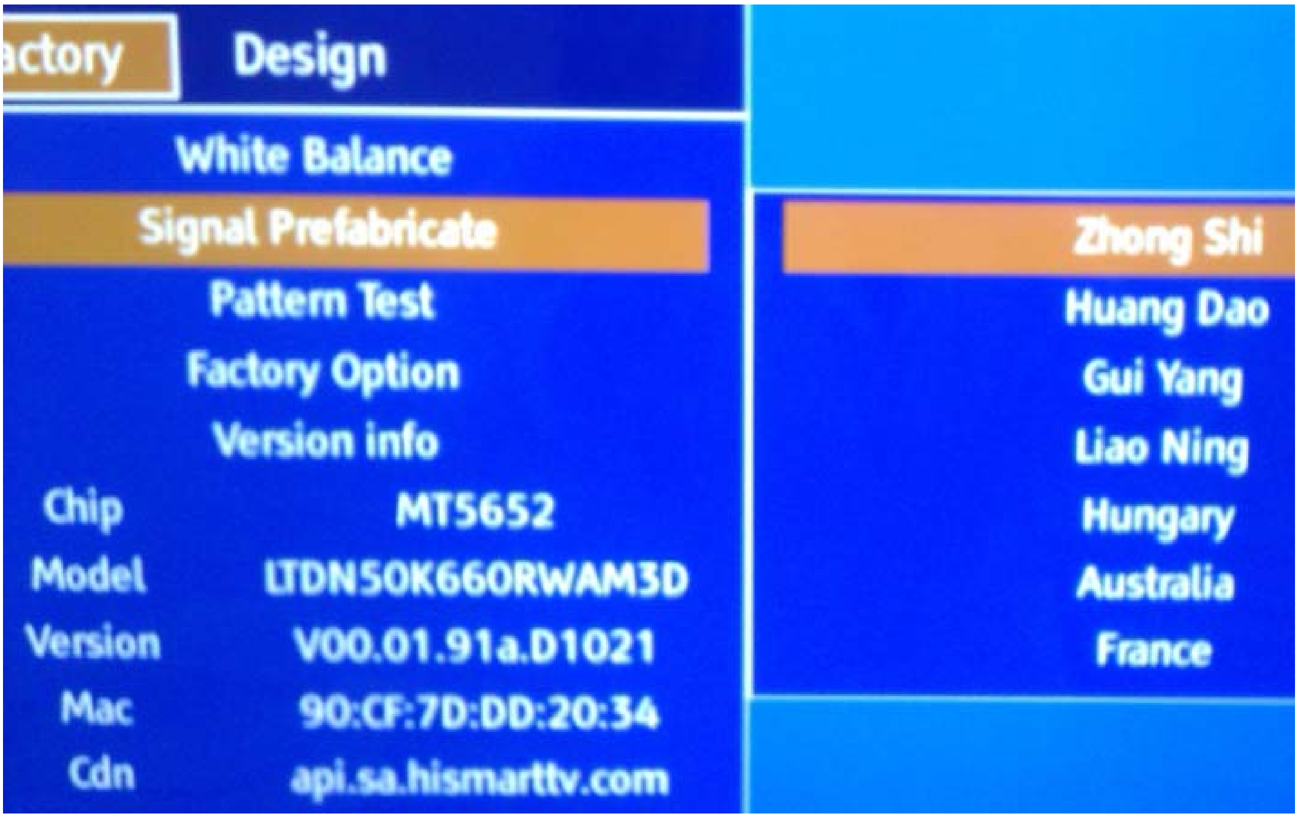
actory
Design
White Balance
Signal Prefabricate
Pattern Test
Factory Option
Version info
Zhong Shi
Huang Dao
Gui Yang
Liao Ning
Hungary
Australia
France

Chip MT5652
Model LTDN50K660RWAM3D
Version V00.01.91a.D1021
Mac 90:CF:7D:DD:20:34
Cdn api.sa.hismarttv.com

3.2.3 Factory Option

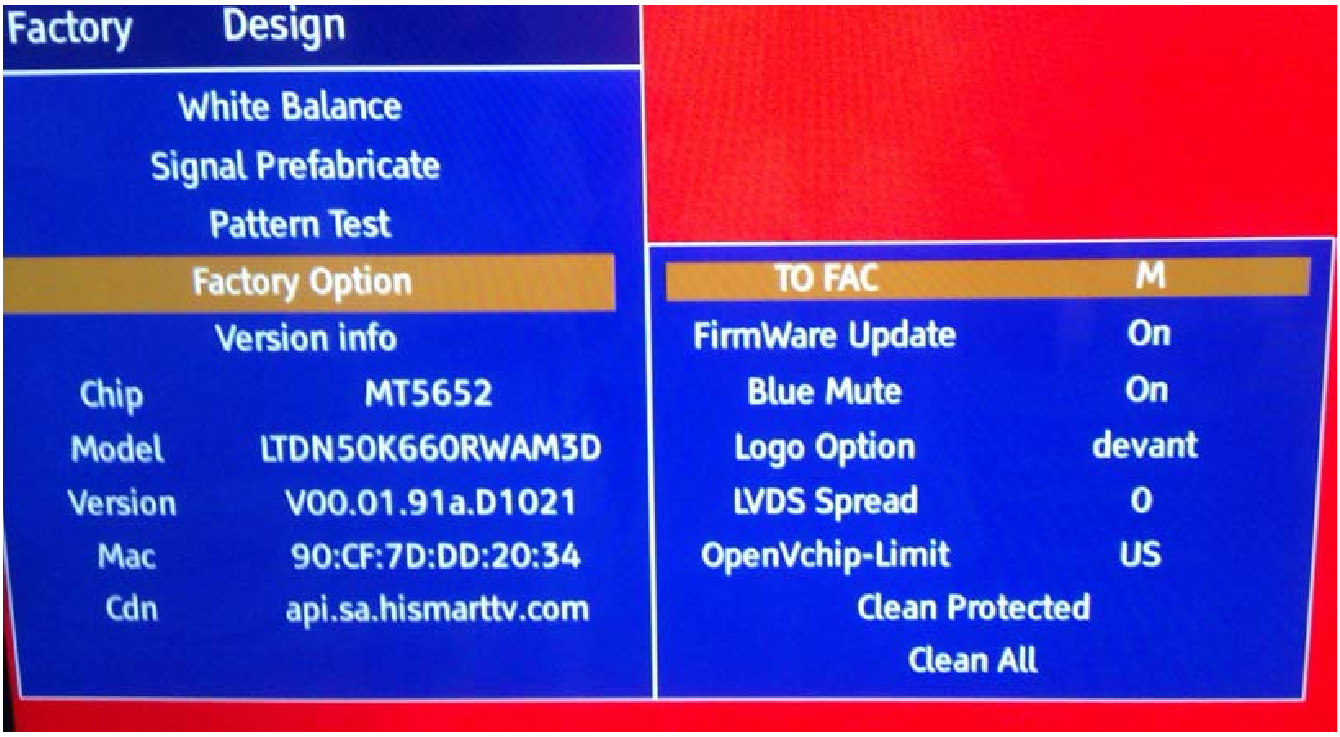
Factory
Design
White Balance
Signal Prefabricate
Pattern Test
Factory Option
Version info
Clean Protected
Clean All

Chip MT5652
Model LTDN50K660RWAM3D
Version V00.01.91a.D1021
Mac 90:CF:7D:DD:20:34
Cdn api.sa.hismarttv.com

TO FAC M
FirmWare Update On
Blue Mute On
Logo Option devant
LVDS Spread 0
OpenVchip-Limit US

	Item	Default	Options	Notes
1	**MODE**	**M**	**M, U**	M-Can enter factory mode with factory RC or user RC. U-Can enter factory mode only with user’ s RC.

Note: MODE “M” is only used for factory production.

	Item	Default	Options	Note
1	**Version**			**Software version**
2	**Date**			**The date of current version**

Note: Software version info of the TV, readable only.

Item	Meaning	Note
Clean Protected	**Clear partly**	Clean data except WB data and Auto Color data
Clean All	**Clear completely**	Clean all data

Note: The factory menu date varies according to different sources. Incase changing the factory data by error, you can choose to "Clean Protected", by which you can resume the default value.

To clear the EEPROM:

a. Select the item "Clean All".

b. Press VOL+ button to clear the EEPROM data.

c. Close the OSD menu after 5 seconds.

d. Restart the TV.

3.3 Designer Menu

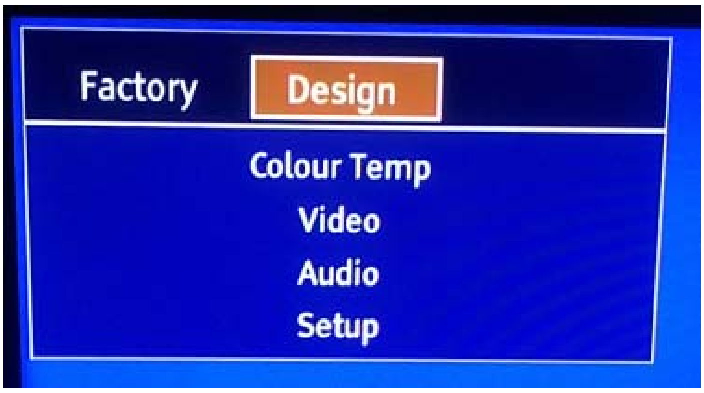
Factory
Design
Colour Temp
Video
Audio
Setup

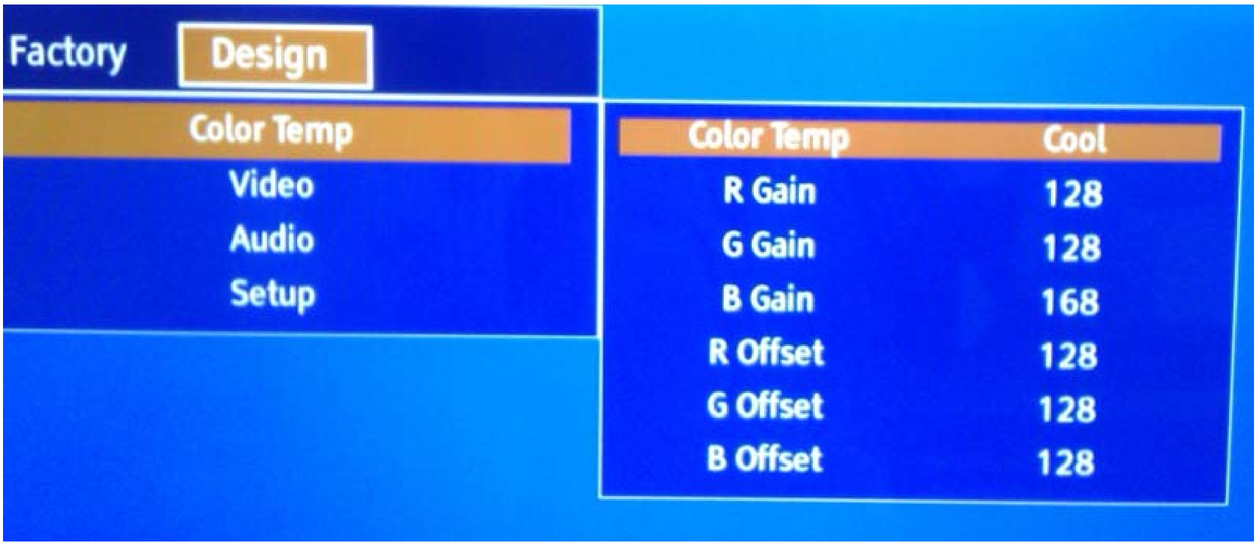
Factory
Design
Color Temp
Video
Audio
Setup

Color Temp Cool
R Gain 128
G Gain 128
B Gain 168
R Offset 128
G Offset 128
B Offset 128

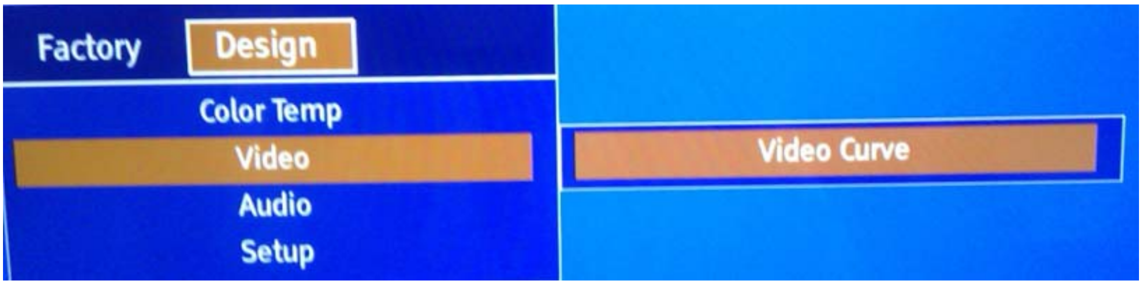
Factory
Design
Color Temp
Video
Audio
Setup
Video Curve

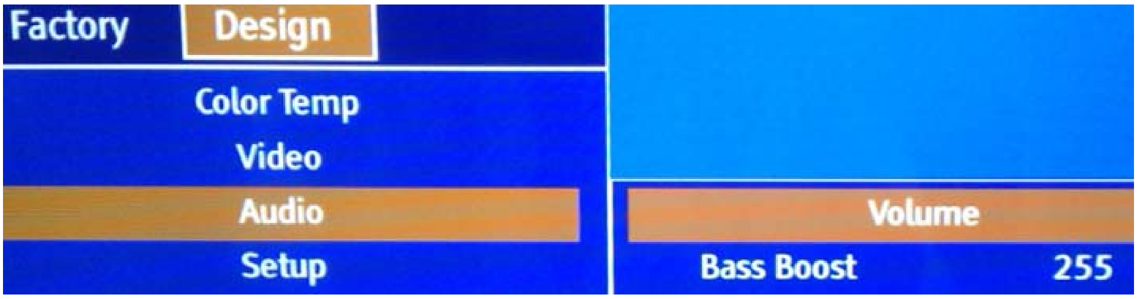
Factory
Design
Color Temp
Video
Audio
Setup
Volume

Bass Boost 255

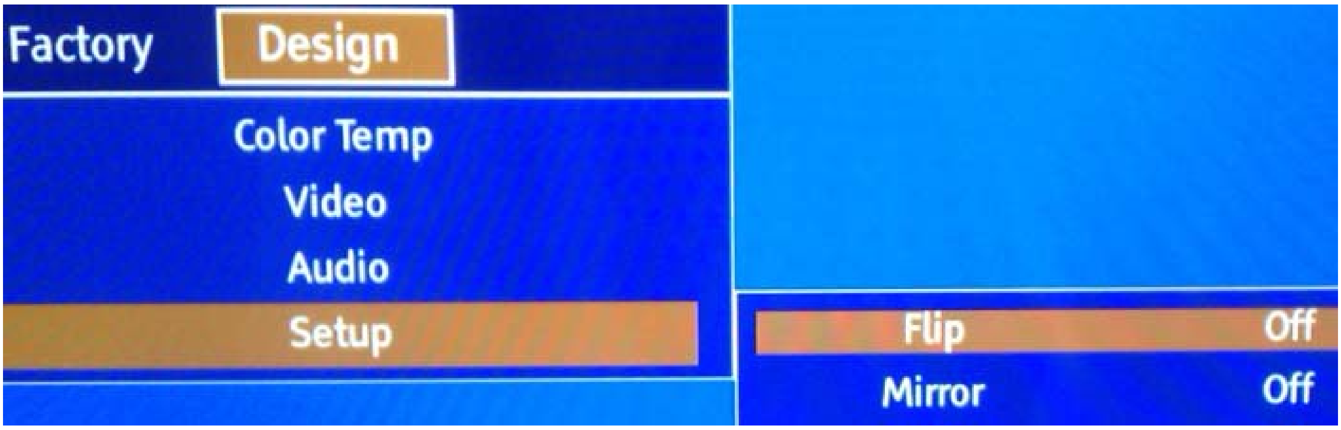
Factory
Design
Color Temp
Video
Audio
Setup

Flip Off

Mirror Off

Note:

The above “Factory/Service OSD Menu” is reference for chassis MTK5652 , please refer to the actual units to determine the appearances for different TV.

4. Software Upgrading

4.1 USB Software Upgrading directly

The software can be upgraded by USB Disk.

- First, copy the upgrade_loader.pkg file to USB Disk;.
- Second, make sure there is no other .pkg file in the root directory of USB Disk.
- Insert USB Disk to USB port, and then power on the TV.
- The TV will identify the software and upgrade automatically.

4.2 USB upgrading unsuccessfully

If USB upgrading unsuccessfully, then need burning the Nand Flash program file“ *.bin ”to the Nand Flash.

Hardware connecting

Connect the unit to your pc with a USB-to-serial port cable. USB port connects to your PC and serial port to the TV’s RS232 port. As following

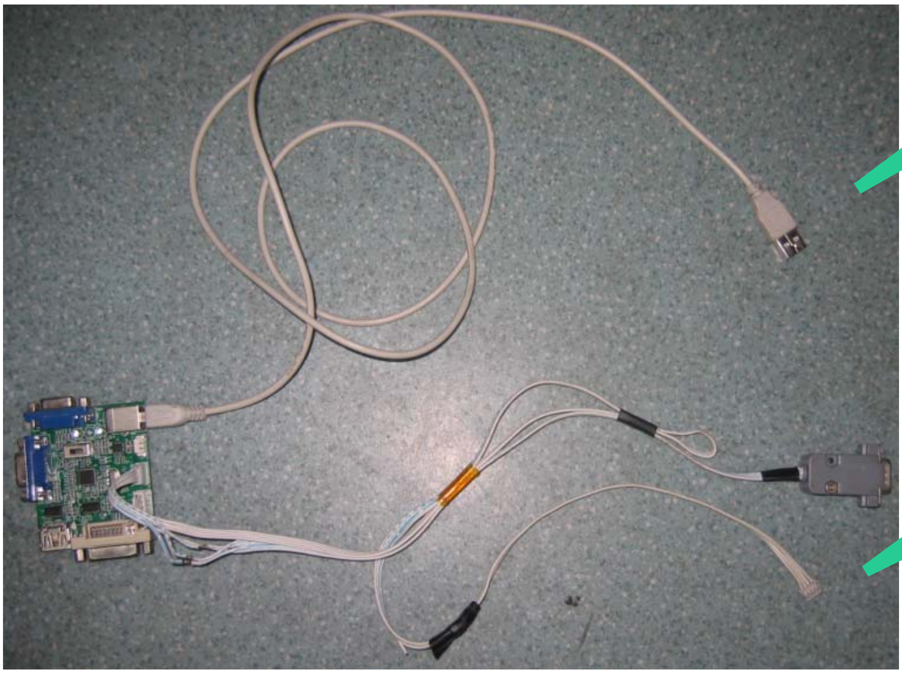

USB Connect to the PC

Connect to the TV RS232 port

4.2.1 Install the driver

Double click the icon PL-2303 Driver Installer.exe, install the driver.

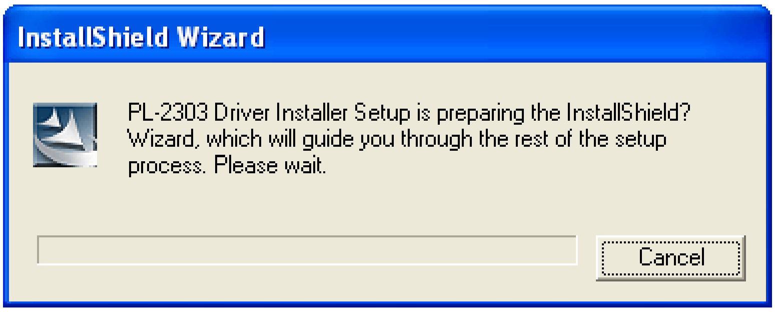

InstallShield Wizard

PL-2303 Driver Installer Setup is preparing the InstallShield? Wizard, which will guide you through the rest of the setup process. Please wait.

Select the default value, the driver will be installed step by step.

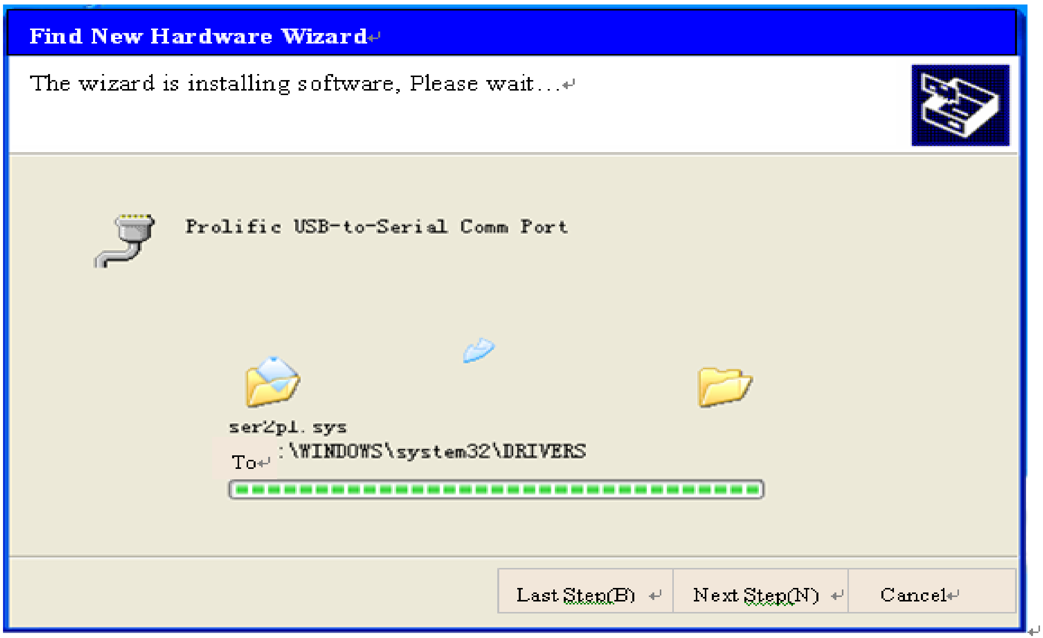

Find New Hardware Wizard

The wizard is installing software, Please wait...

Prolific USB-to-Serial Comm Port

ser2pl.sys

To :\WINDOWS\system32\DRIVERS

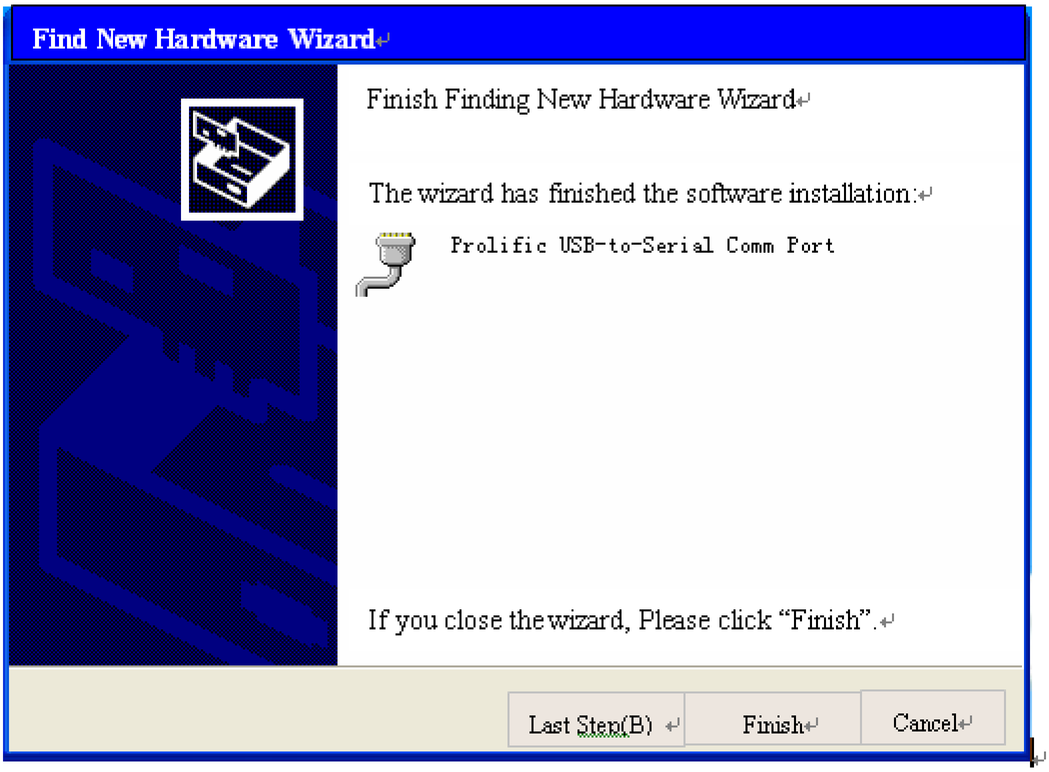
Find New Hardware Wizard

Finish Finding New Hardware Wizard

The wizard has finished the software installation:

Prolific USB-to-Serial Comm Port

If you close the wizard, Please click “Finish”.

Last Step(B)
Finish
Cancel

4.3 Upgrading with the FlashTool0.6.0.exe

1、FlashTool is a green program needing no installation. After Connect the unit to your pc with a USB-to-serial port cable， run FlashTool0.6.0.exe. Please refer to the following steps to set.

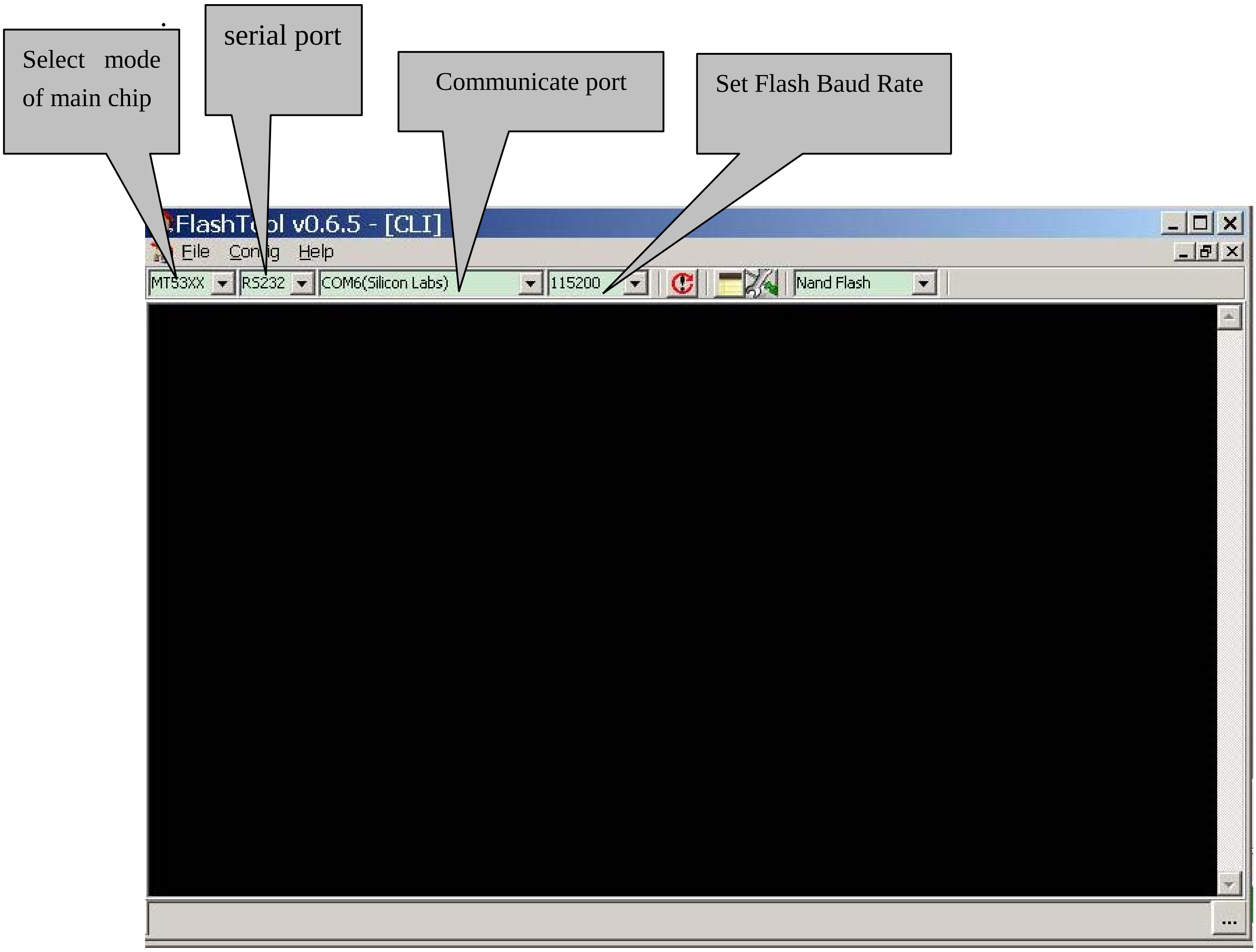

Select mode of main chip

serial port

Communicate port

Set Flash Baud Rate

FlashTool v0.6.5 - [CLI]

MT53XX RS232 COM6(Silicon Labs) 115200 Nand Flash

How to choose Communicate port and flash baud rate? See the following instruction..

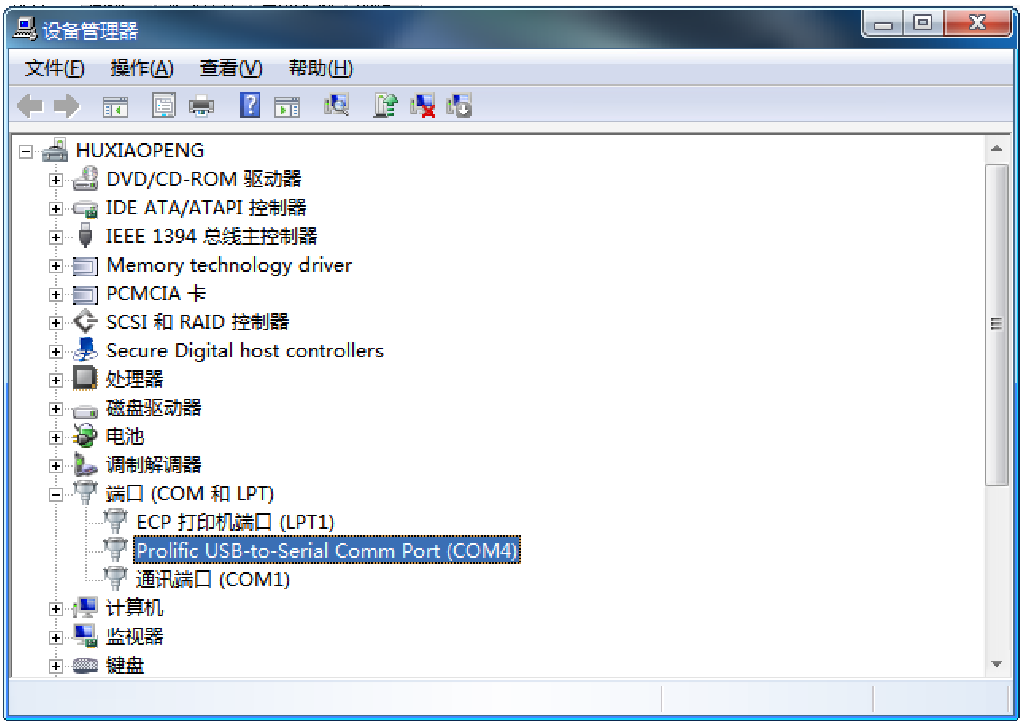
设备管理器
文件(F) 操作(A) 查看(V) 帮助(H)
HUXIAOPENG
DVD/CD-ROM 驱动器
IDE ATA/ATAPI 控制器
IEEE 1394 总线主控制器
Memory technology driver
PCMCIA 卡
SCSI 和 RAID 控制器
Secure Digital host controllers
处理器
磁盘驱动器
电池
调制解调器
端口 (COM 和 LPT)
ECP 打印机端口 (LPT1)
Prolific USB-to-Serial Comm Port (COM4)
通讯端口 (COM1)
计算机
监视器
键盘

Open “Device Manager” and find which port is connected with the TV. In above picture, COM4 is connected to the TV, so, select “COM4” and if COM6 is connected to the TV, so select “COM6”. Select the right baud rate according to chip model. For this unit(chip model is MT5652), select 115200.

2、 Click to connect，if connect successfully then button from red turn green.

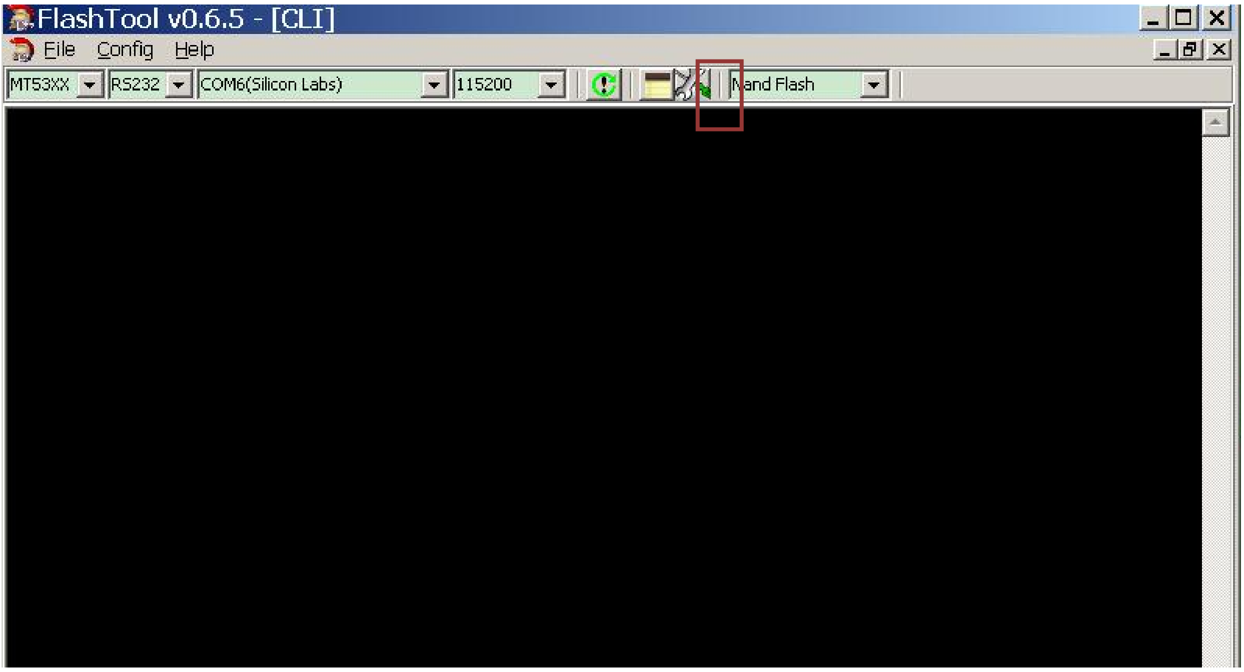
FlashTool v0.6.5 - [CLI]
File Config Help
MT53XX
RS232
COM6(Silicon Labs)
115200
Nand Flash

Click , bounce the following dialog box. Load Bin File：find the upgrading program file, and select it. for example:HIS_5651_m1v2_oceania_secure_nandboot.bin. Press “Upgrade” button and start upgrading.， if update defeat, try again.

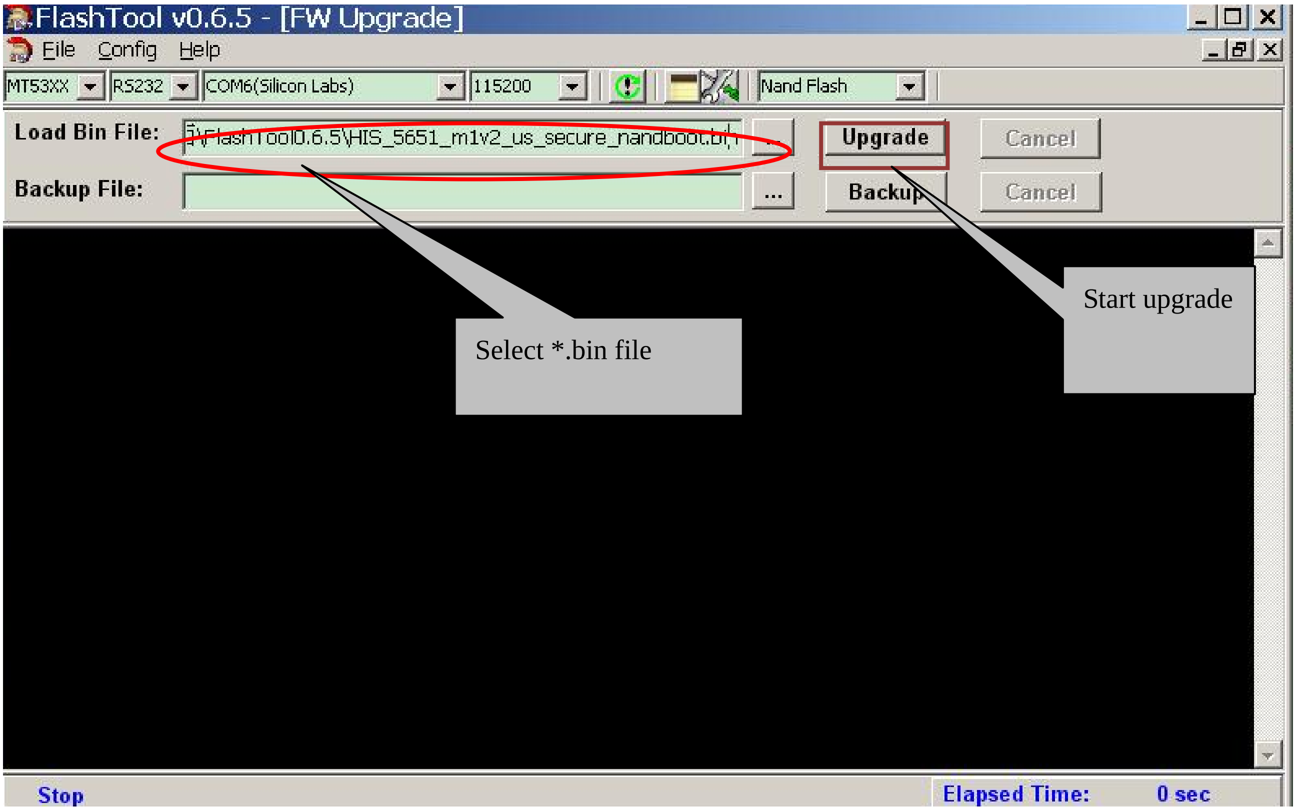

FlashTool v0.6.5 - [FW Upgrade]

MT53XX | RS232 | COM6(Silicon Labs) | 115200 | Nand Flash

Load Bin File: \FlashTool0.6.5\HIS_5651_m1v2_us_secure_nandboot.bi

Backup File:

Stop

Elapsed Time: 0 sec

Select *.bin file

Start upgrade

If bootloader Tool upgrading is ok, then need renew USB upgrading.reference to 4.1(**USB Software Upgrading directly)**

4.4 Network updating

Network updating includes three ways. Auto Upgrade 、Network upgrade and USB upgrade.
No matter Auto Upgrade is ON or Off，Network Upgrade is validated
4.4.1 Auto Upgrade---- When set to “on” , system can automatically check whether or not have any new updating file in servers after have connected to the network. Customer can download and update according to the guide.
Network upgrade ---- Check the process and it will prompt you to upgrade the software.

Network upgrade

Press “menu” key with RC, select as following.

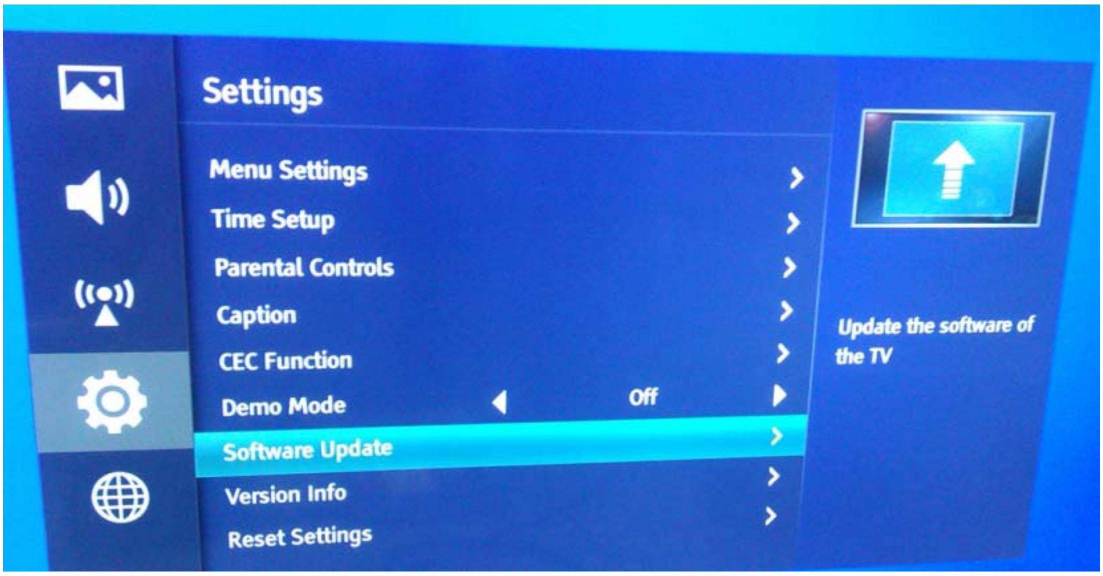
Settings
Menu Settings
Time Setup
Parental Controls
Caption
CEC Function
Demo Mode
Off
Software Update
Version Info
Reset Settings
Update the software of the TV

Figure-1

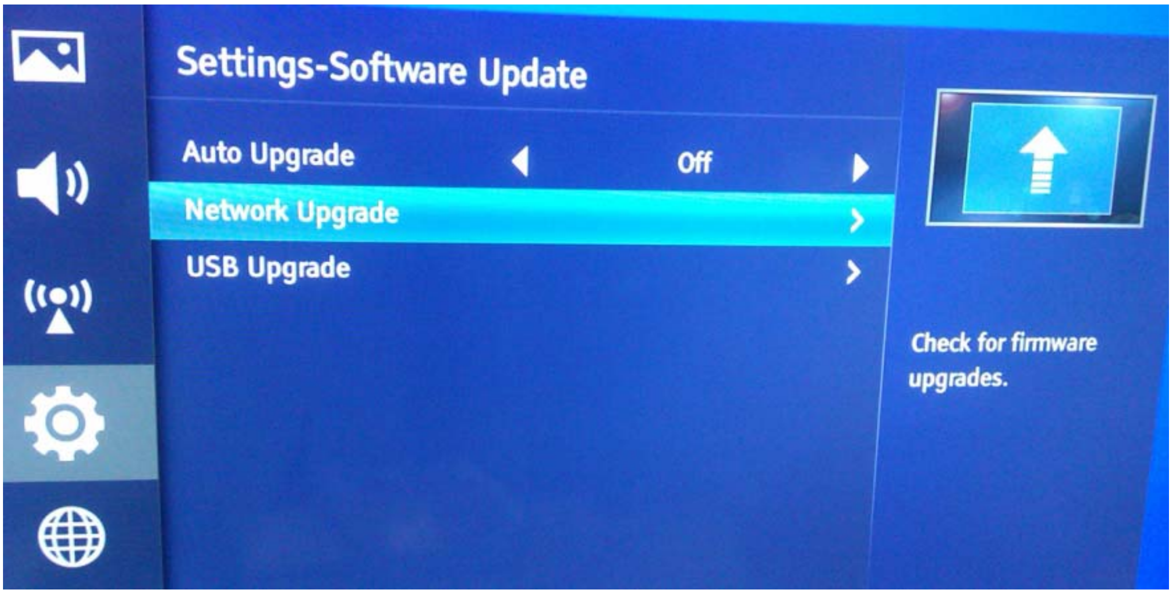

Settings-Software Update

Auto Upgrade ◀ Off ▶

Network Upgrade ›

USB Upgrade ›

Check for firmware upgrades.

Figure-2

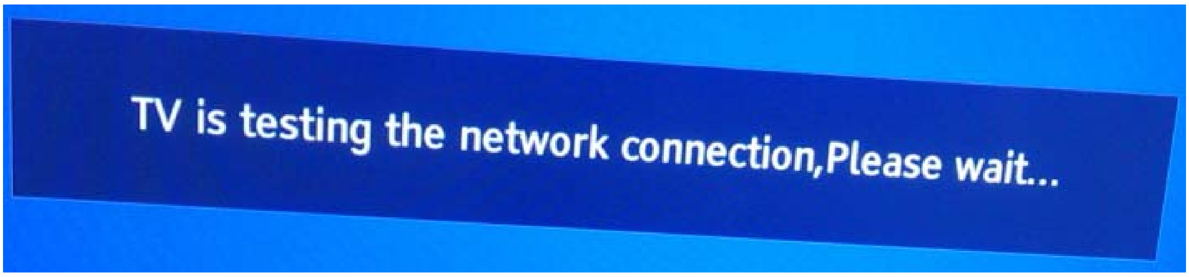

TV is testing the network connection,Please wait...

Figure-3

Check new version, bounce the following.

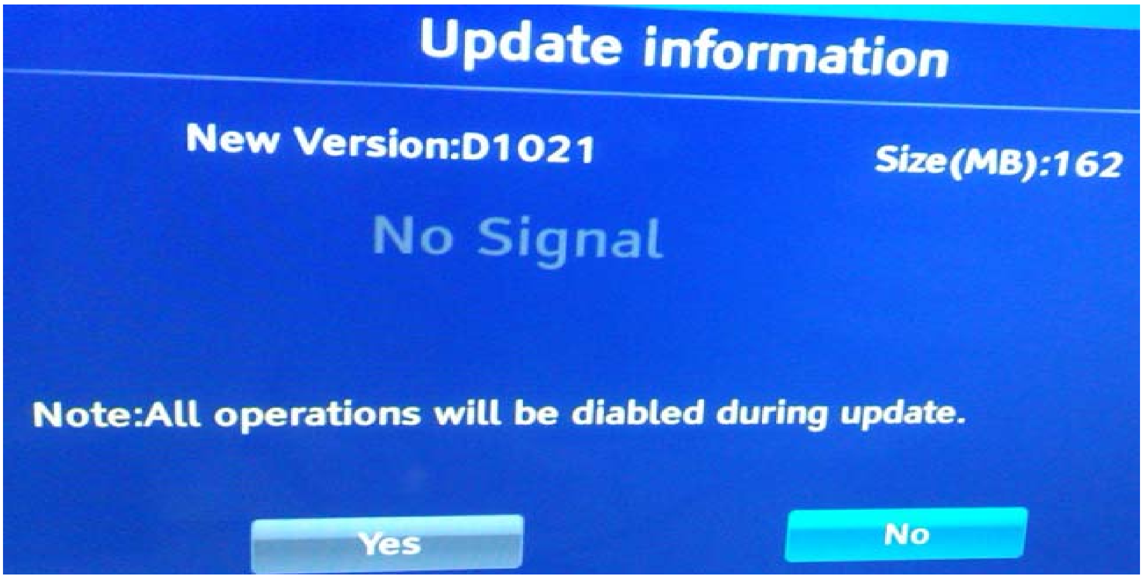

Update information

New Version:D1021

Size(MB):162

No Signal

Note:All operations will be diabled during update.

Figure-4

Select Yes to downloading……

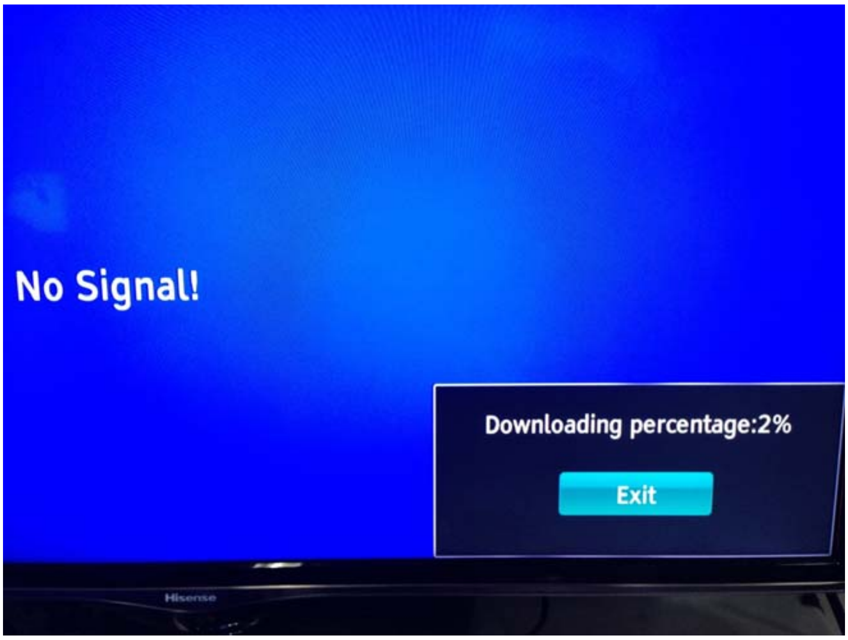

No Signal!

Downloading percentage:2%

Figure-5

After verify, bounce dialog to select “yes” to update the firmware. Waiting……

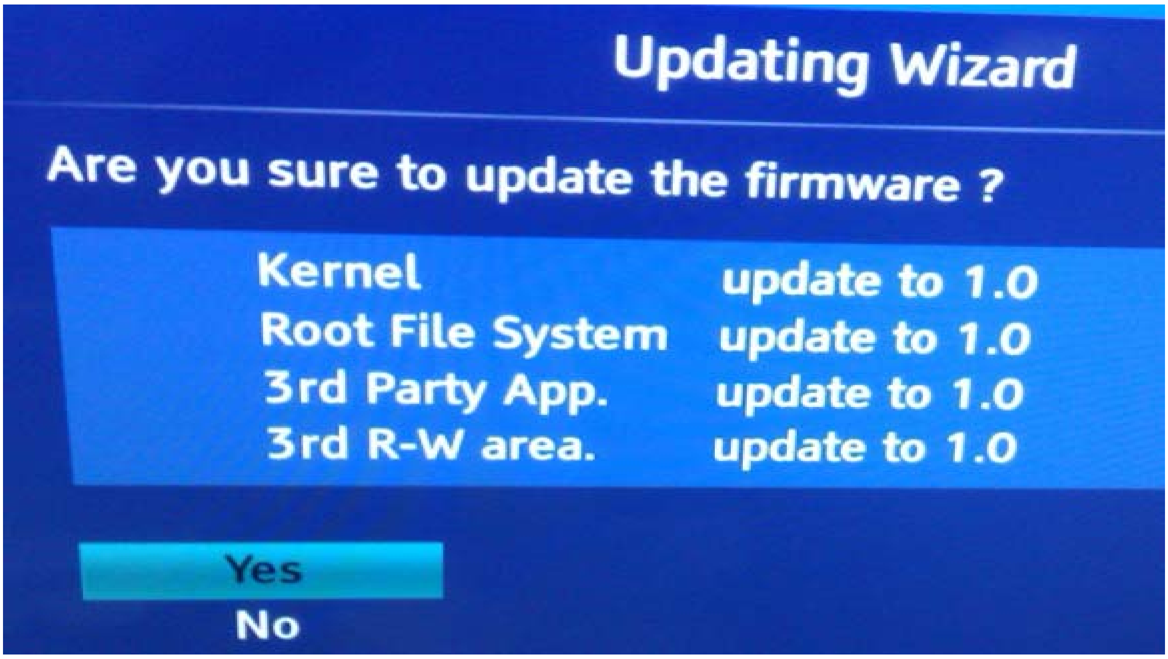

Updating Wizard

Are you sure to update the firmware ?

Kernel	update to 1.0
Root File System	update to 1.0
3rd Party App.	update to 1.0
3rd R-W area.	update to 1.0

Figure-6

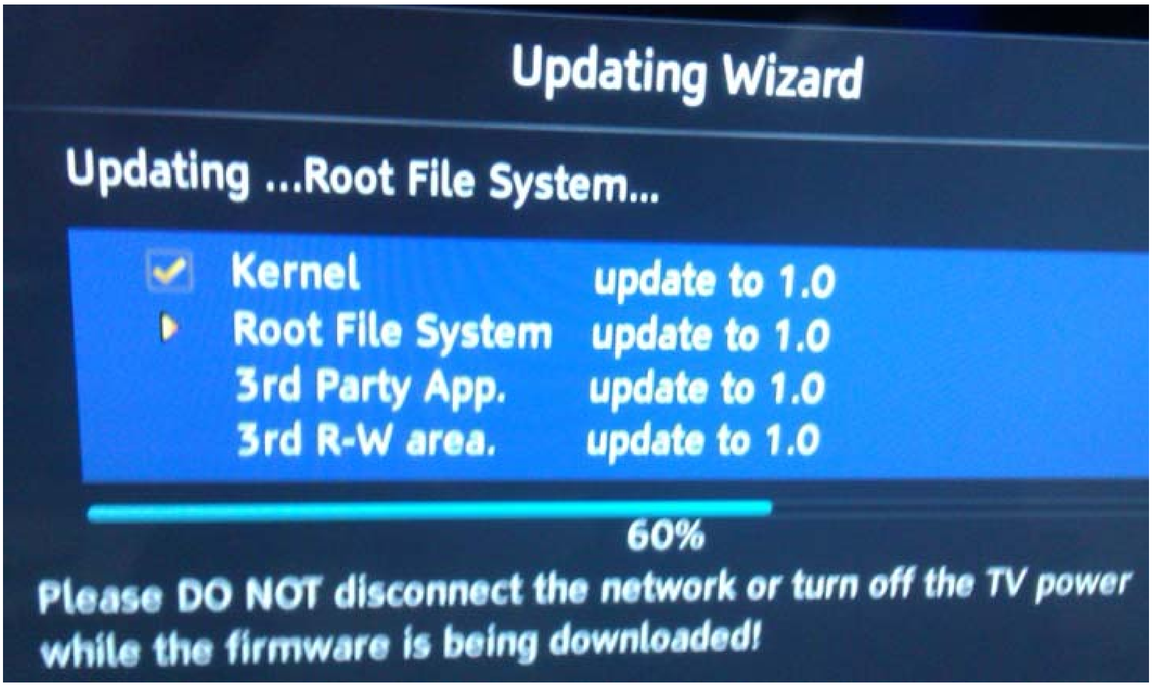

Updating Wizard

Updating ...Root File System...

☑	Kernel	update to 1.0
▸	Root File System	update to 1.0
	3rd Party App.	update to 1.0
	3rd R-W area.	update to 1.0

60%

Please DO NOT disconnect the network or turn off the TV power while the firmware is being downloaded!

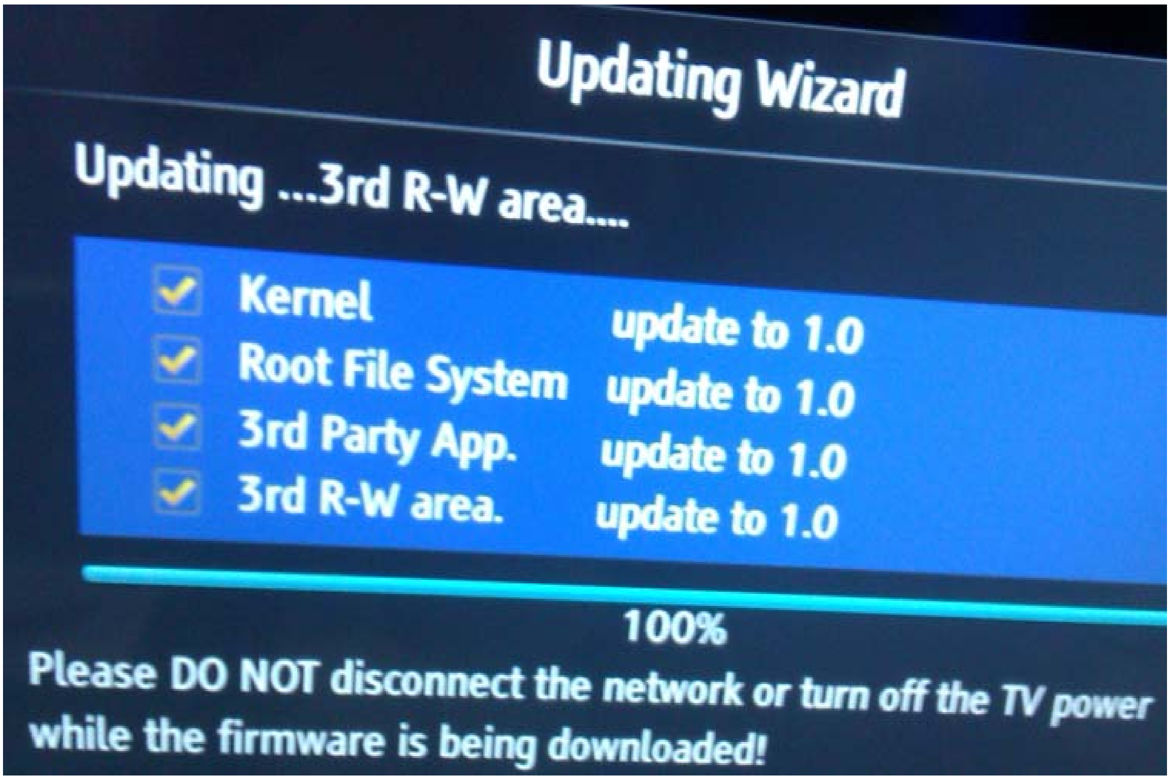

Updating Wizard

Updating ...3rd R-W area....

☑	Kernel	update to 1.0
☑	Root File System	update to 1.0
☑	3rd Party App.	update to 1.0
☑	3rd R-W area.	update to 1.0

100%

Please DO NOT disconnect the network or turn off the TV power while the firmware is being downloaded!

Figure-7

Bounding the following interface that indicates firmware update is successful.

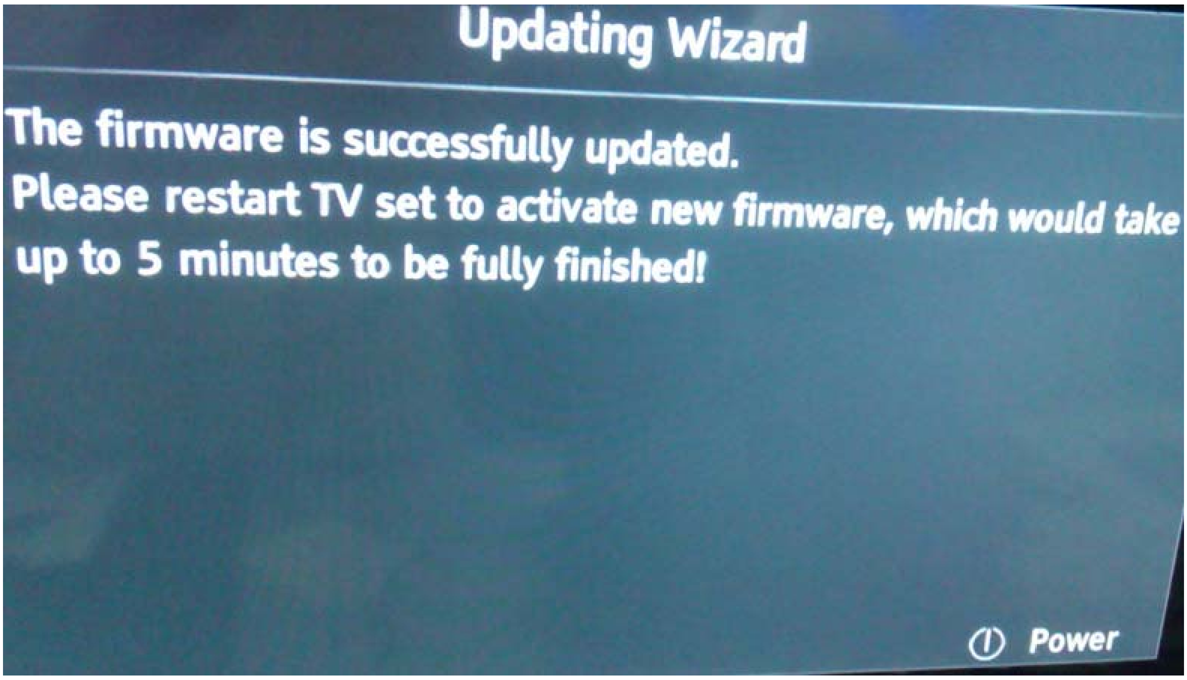
Updating Wizard

The firmware is successfully updated.
Please restart TV set to activate new firmware, which would take up to 5 minutes to be fully finished!

Figure-8

Remote control Power off and restart TV. indication led is linking .about 5 minutes , TV bounce following prompt message. otherwise upgrade is defeated.

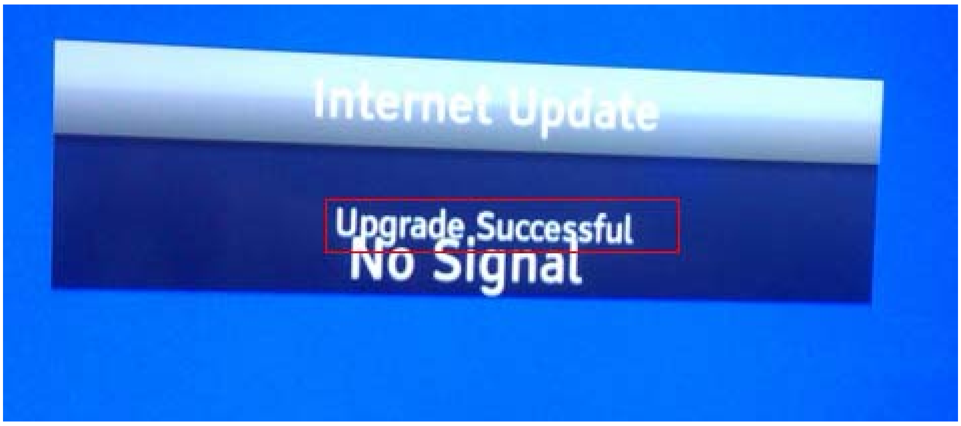
Internet Update

Upgrade Successful

No Signal

Figure-9

USB upgrade:

1. Copy the upgrade_loader.pkg file to USB Disk;.
2. Make sure there is no other .pkg file in the root directory of USB Disk.
3. Insert USB Disk to USB port. and then turn on the TV.

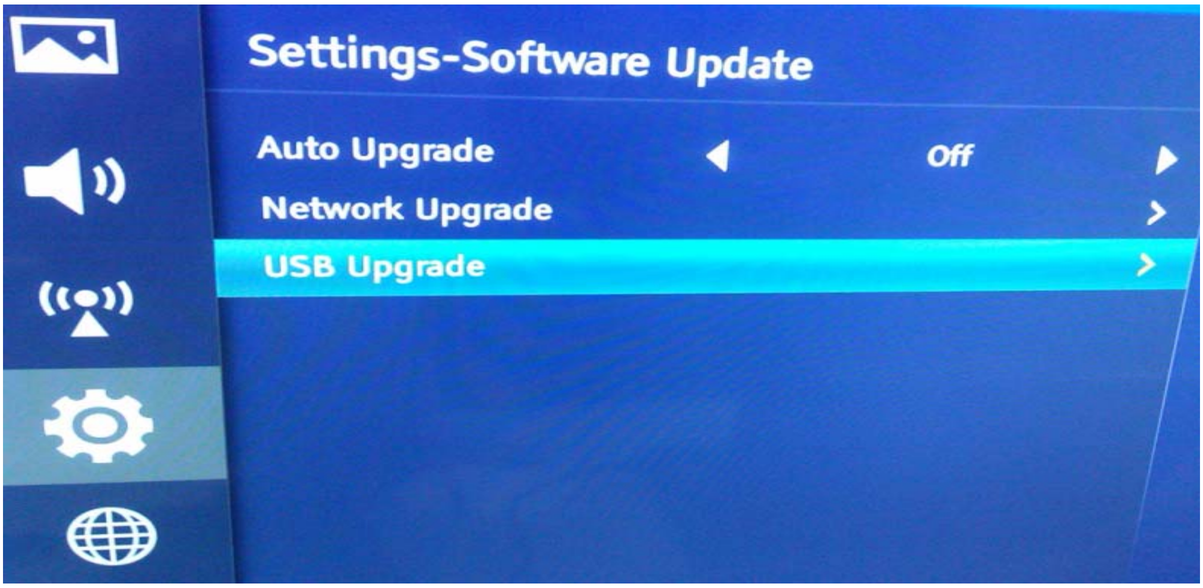
Settings-Software Update
Auto Upgrade
Off
Network Upgrade
USB Upgrade

figure-2

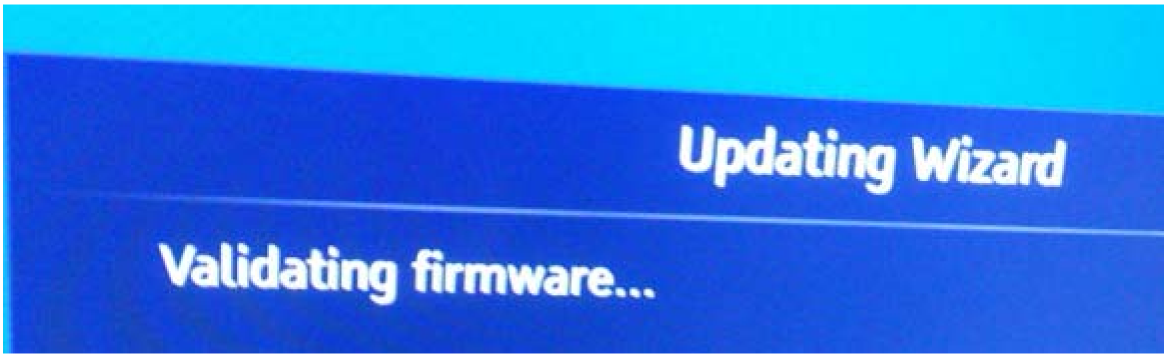
Updating Wizard

Validating firmware...

Next update steps can according to the network upgrade.

5. Trouble shooting

When there is something wrong with your TV, you can try turning off the TV and then restart it. You can also operate according to the follow chart. If the problems still cann't be solved, please contact the profession technician.

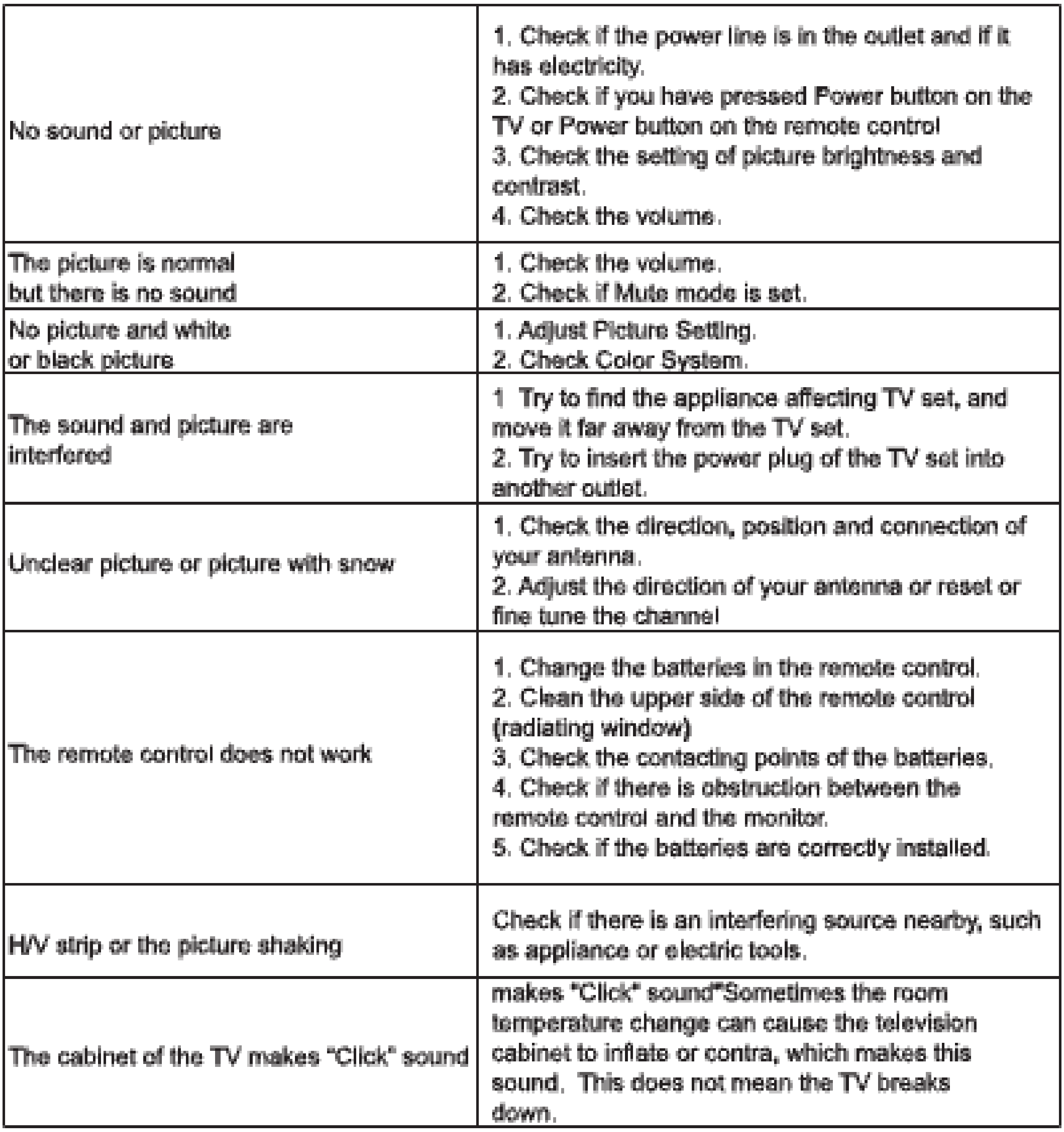

No sound or picture	1. Check if the power line is in the outlet and if it has electricity. 2. Check if you have pressed Power button on the TV or Power button on the remote control 3. Check the setting of picture brightness and contrast. 4. Check the volume.
The picture is normal but there is no sound	1. Check the volume. 2. Check if Mute mode is set.
No picture and white or black picture	1. Adjust Picture Setting. 2. Check Color System.
The sound and picture are interfered	1 Try to find the appliance affecting TV set, and move it far away from the TV set. 2. Try to insert the power plug of the TV set into another outlet.
Unclear picture or picture with snow	1. Check the direction, position and connection of your antenna. 2. Adjust the direction of your antenna or reset or fine tune the channel
The remote control does not work	1. Change the batteries in the remote control. 2. Clean the upper side of the remote control (radiating window) 3. Check the contacting points of the batteries. 4. Check if there is obstruction between the remote control and the monitor. 5. Check if the batteries are correctly installed.
H/V strip or the picture shaking	Check if there is an interfering source nearby, such as appliance or electric tools.
The cabinet of the TV makes "Click" sound	makes "Click" sound"Sometimes the room temperature change can cause the television cabinet to inflate or contra, which makes this sound. This does not mean the TV breaks down.

5.1 Troubleshooting for Remote Control

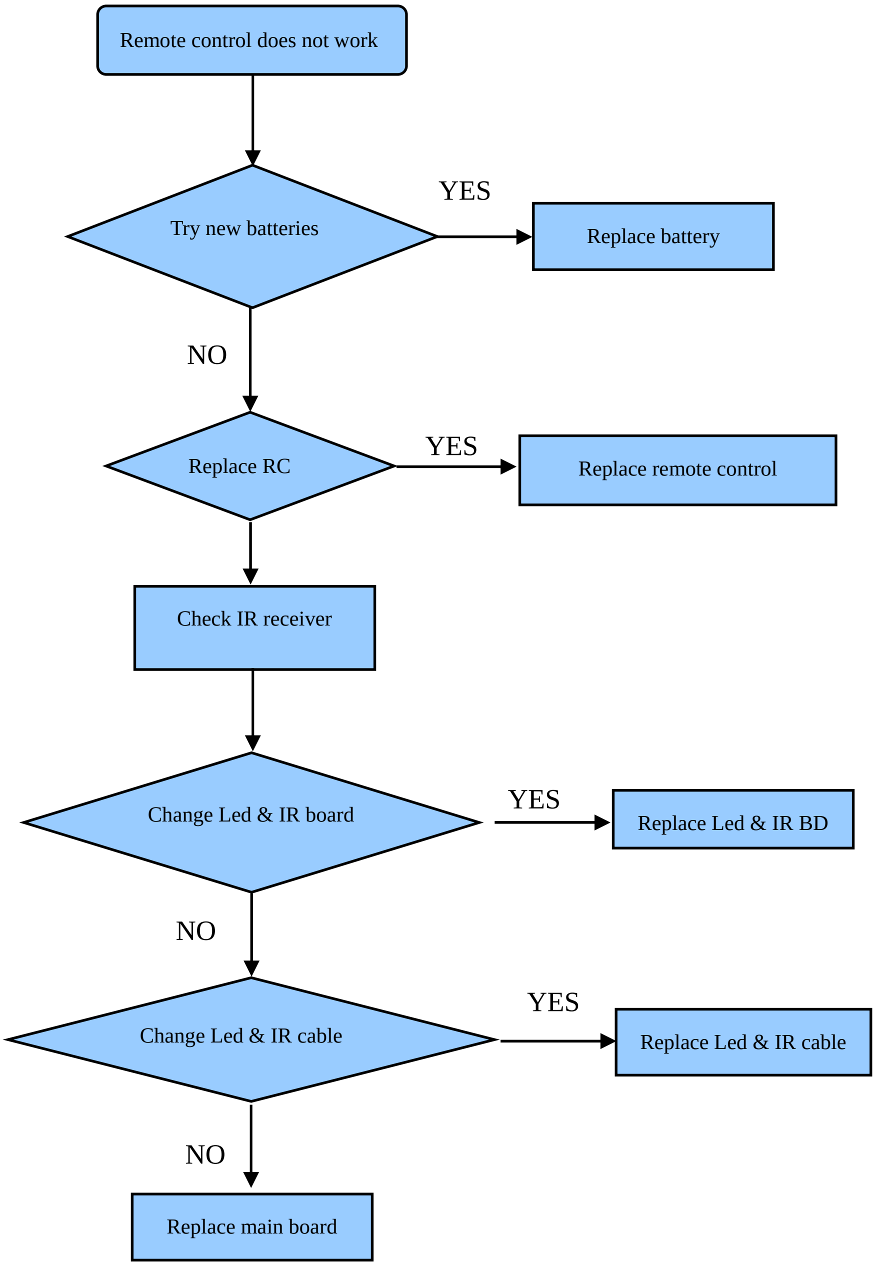
Remote control does not work
Try new batteries
YES
Replace battery
NO
Replace RC
YES
Replace remote control
Check IR receiver
Change Led & IR board
YES
Replace Led & IR BD
NO
Change Led & IR cable
YES
Replace Led & IR cable
NO
Replace main board

5.2 Troubleshooting for Function Key

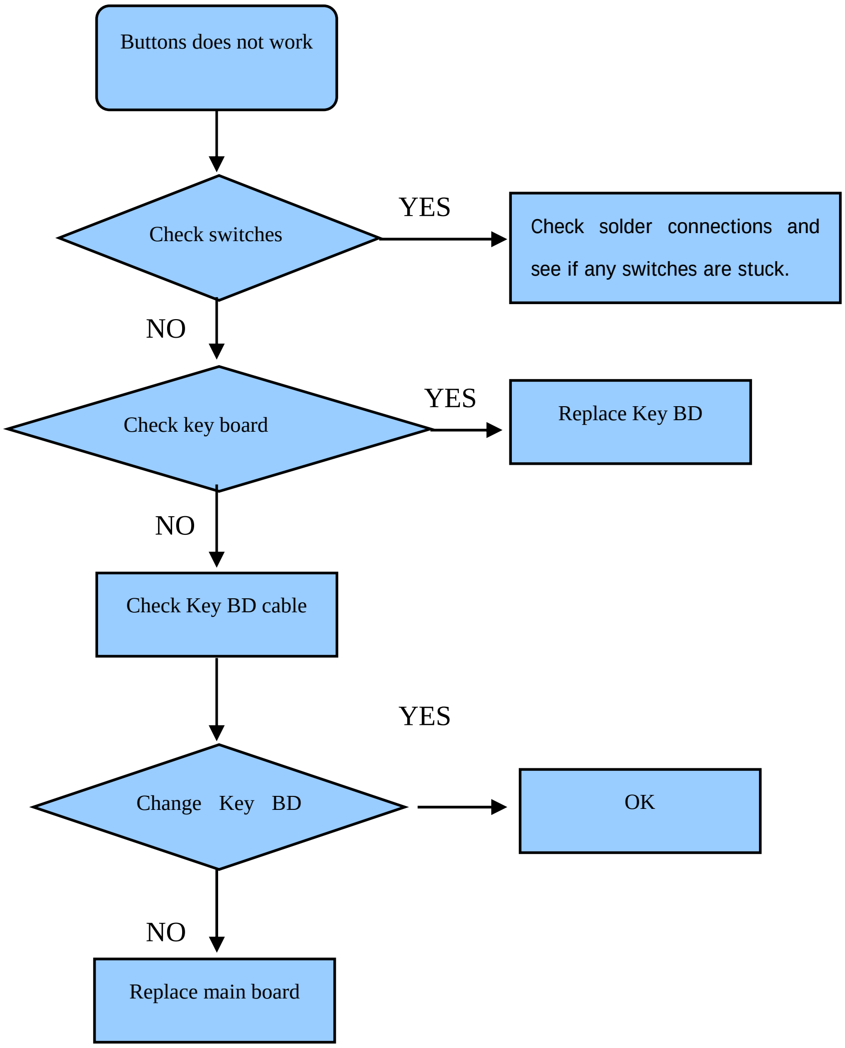
Buttons does not work
Check switches
YES
Check solder connections and see if any switches are stuck.
NO
Check key board
YES
Replace Key BD
NO
Check Key BD cable
YES
Change Key BD
OK
NO
Replace main board

5.3 TV won't Power On

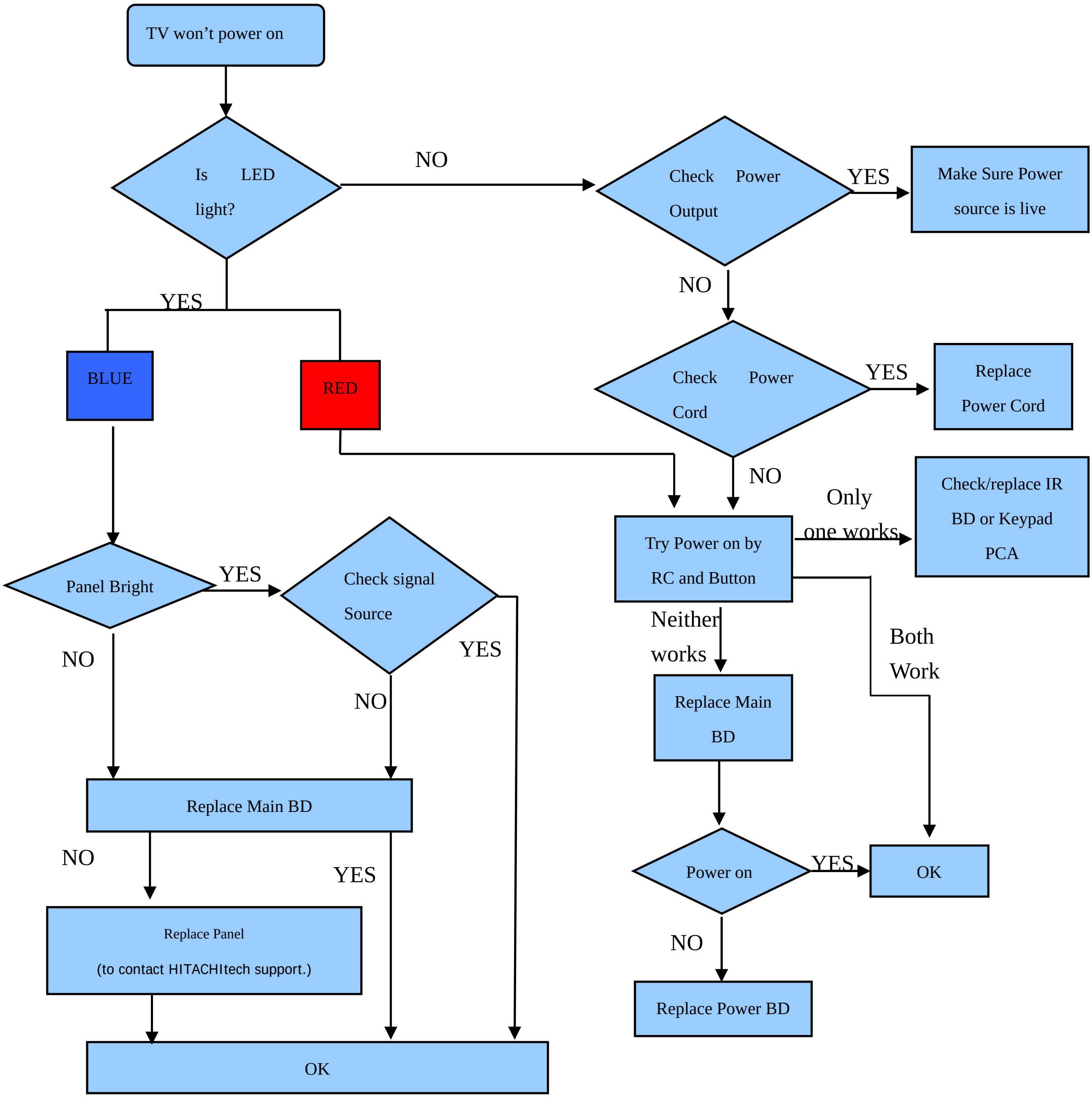
TV won't power on
Is LED light?
NO
Check Power Output
YES
Make Sure Power source is live
NO
Check Power Cord
YES
Replace Power Cord
YES
BLUE
RED
NO
Only one works
Check/replace IR BD or Keypad PCA
Try Power on by RC and Button
Panel Bright
YES
Check signal Source
YES
NO
Neither works
Both Work
NO
Replace Main BD
Replace Main BD
NO
YES
Power on
YES
OK
Replace Panel
(to contact HITACHItech support.)
NO
Replace Power BD
OK

Note:

Above the indicated led color is only for standby is red , normal is blue.

5.4 Troubleshooting for Audio

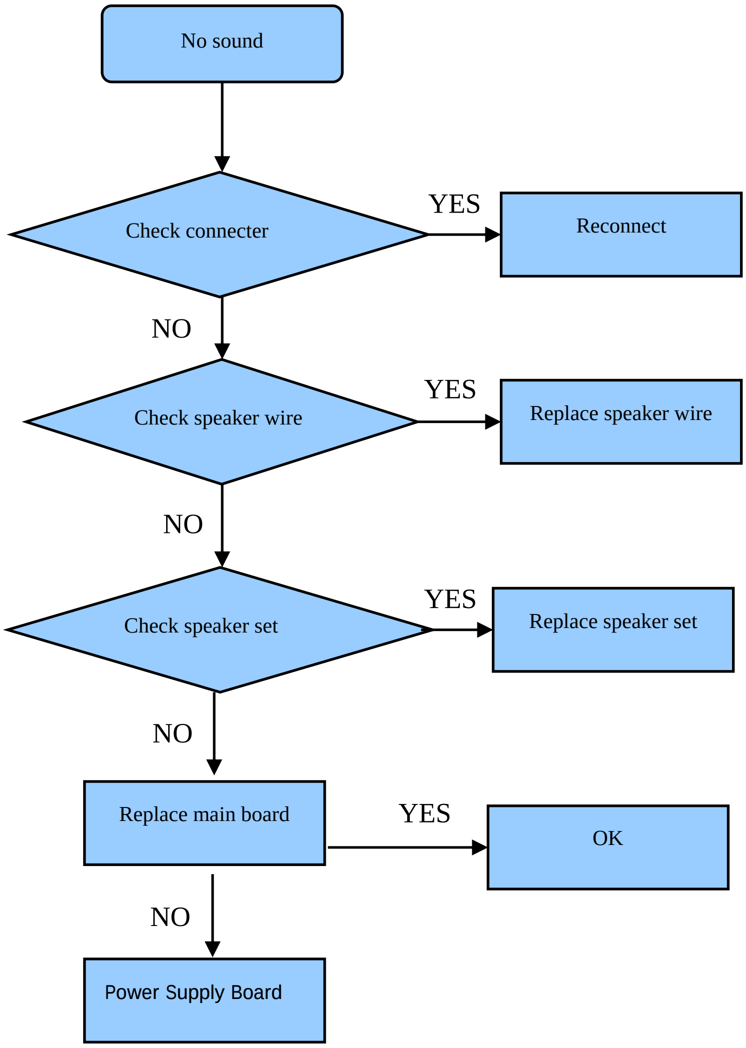
No sound
Check connecter
YES
Reconnect
NO
Check speaker wire
YES
Replace speaker wire
NO
Check speaker set
YES
Replace speaker set
NO
Replace main board
YES
OK
NO
Power Supply Board

5.5 Troubleshooting for TV/VGA/HDMI input

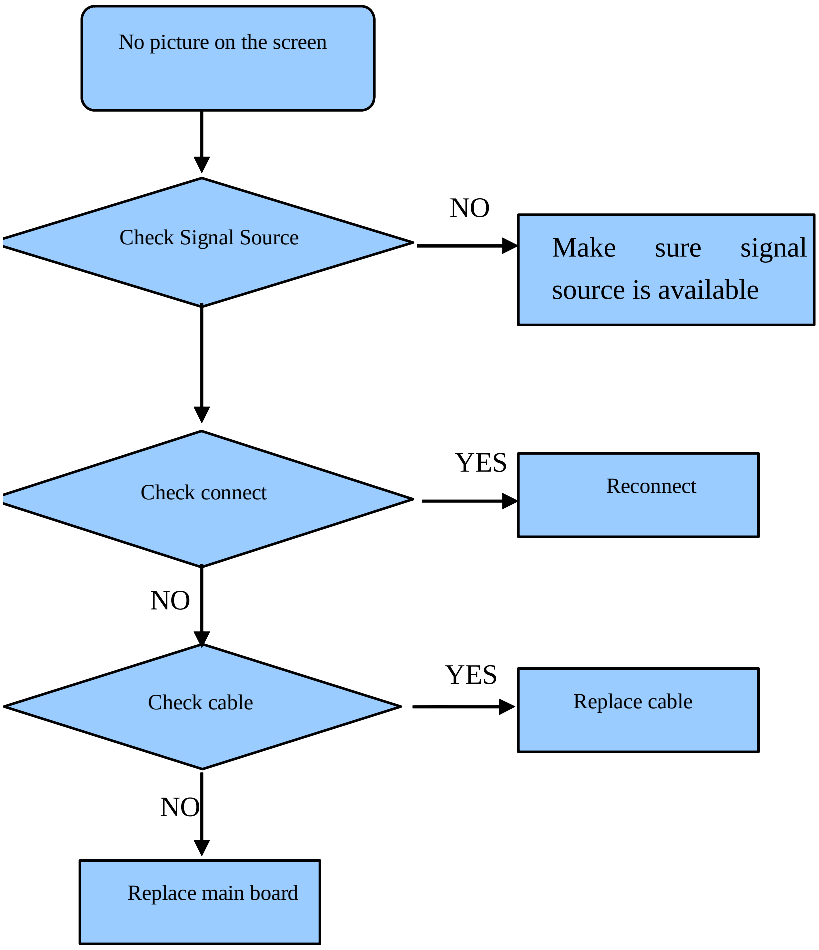
No picture on the screen
Check Signal Source
NO
Make sure signal source is available
Check connect
YES
Reconnect
NO
Check cable
YES
Replace cable
NO
Replace main board

5.6 Troubleshooting for YPbPr input

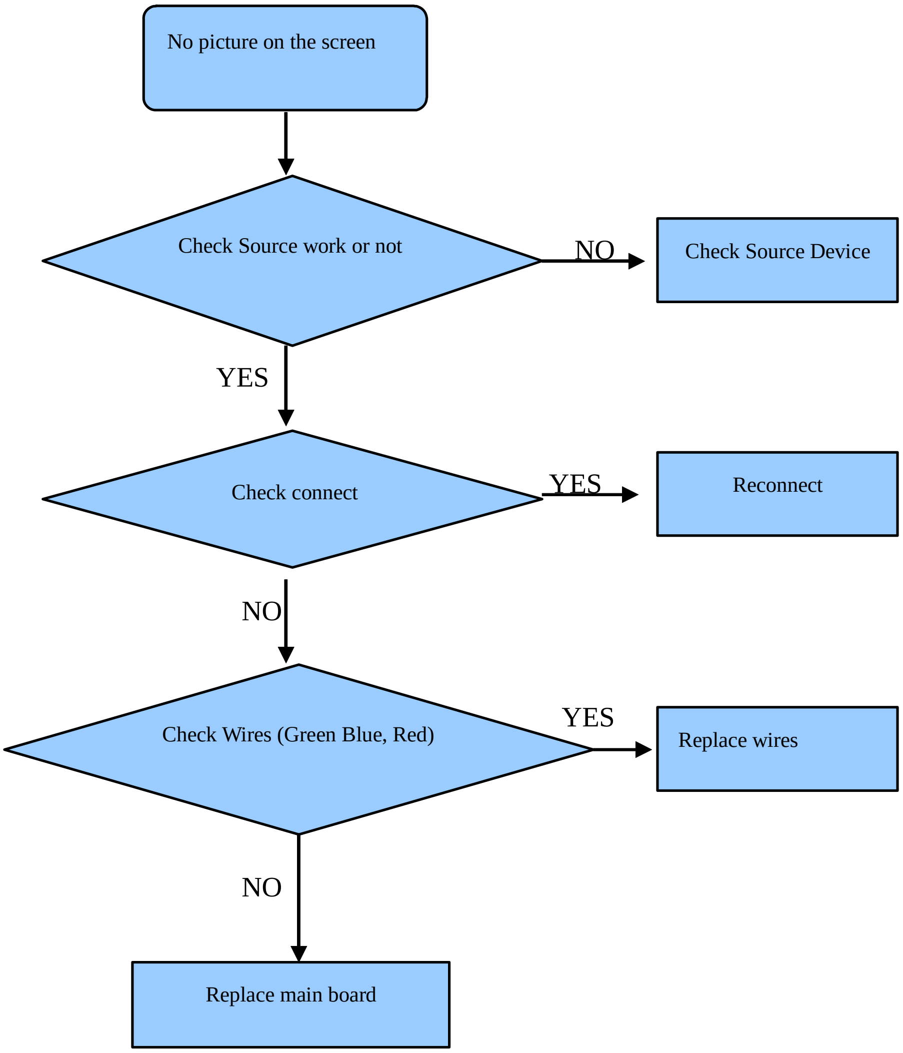
No picture on the screen
Check Source work or not
NO
Check Source Device
YES
Check connect
YES
Reconnect
NO
Check Wires (Green Blue, Red)
YES
Replace wires
NO
Replace main board

5.7 Troubleshooting for Video input

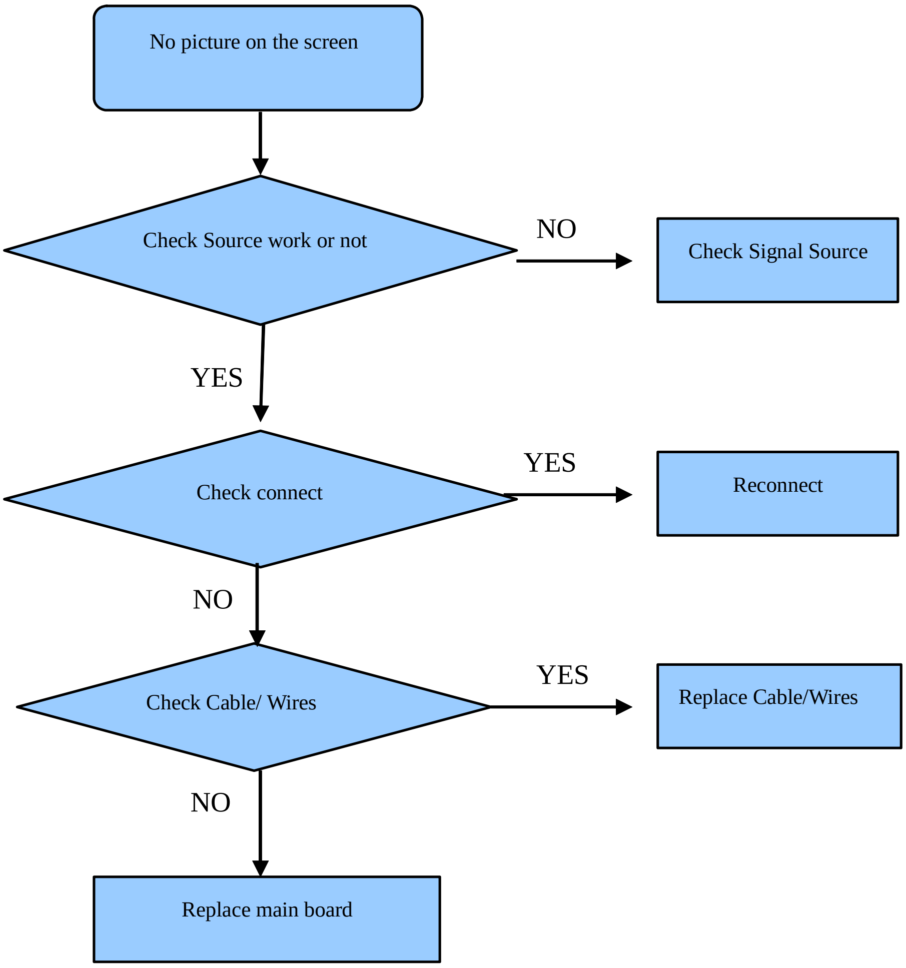
No picture on the screen
Check Source work or not
NO
Check Signal Source
YES
Check connect
YES
Reconnect
NO
Check Cable/ Wires
YES
Replace Cable/Wires
NO
Replace main board

6. Signals Block Diagram and power assign:

(The next page)

7. Schematic circuit diagram

8. Explode View

MT5652

GPIO LIST

PIN NAME	GPIO Function	Function define
GPIO_0		LOCAL_DIM_EN
GPIO_1		TUNER_SW
GPIO_2		LVDS_PWR_EN
GPIO_3		EMMC_RST
GPIO_4		Demod_RST#
GPIO_5		not used
GPIO_6		3D_EN
GPIO_7		3D相关
GPIO_8		3D相关
GPIO_9		3D_OUT
GPIO_10		HPDET#
GPIO_11		SYS_EEPROM_WP

ADIN0		SCART_FS_SEL
ADIN1		通过10k接地，未使用
ADIN2		ADIN0
ADIN3		ADIN1
ADIN4		LED_DX
ADIN5		POWER_LED
OPCTRL0		FLASH写保护控制
OPCTRL1		BL_ON/OFF
OPCTRL2		AMP_MUTE
OPCTRL3		strap[2]
OPCTRL4		strap[3] RST_AMP
OPWM0		WIFI_EN
OPWM1		MEMC_ON/OFF
OPWM2		BL_DIMMING
OPWM3		MUTE_HP
OPWM4		3D_CTRL
OPWM5		LED2/PHYAD2
OPWM6		LED3/PHYAD3
PACLE		strap[0]
CIGPIO0		RESERVED LVDS预留

CIGPIO15		TS1_OUT_CLK
CIGPIO16		TS1_OUT_VLD
CIGPIO17		TS1_OUT_SYNC
CIGPIO18		TS1_OUT_D0
CIGPIO19		TS1_OUT_D1
CIGPIO20		TS1_OUT_D2
CIGPIO21		TS1_OUT_D3
CIGPIO22		TS1_OUT_D4
CIGPIO23		TS1_OUT_D5
CIGPIO24		TS1_OUT_D6
CIGPIO25		TS1_OUT_D7

Block Diagram

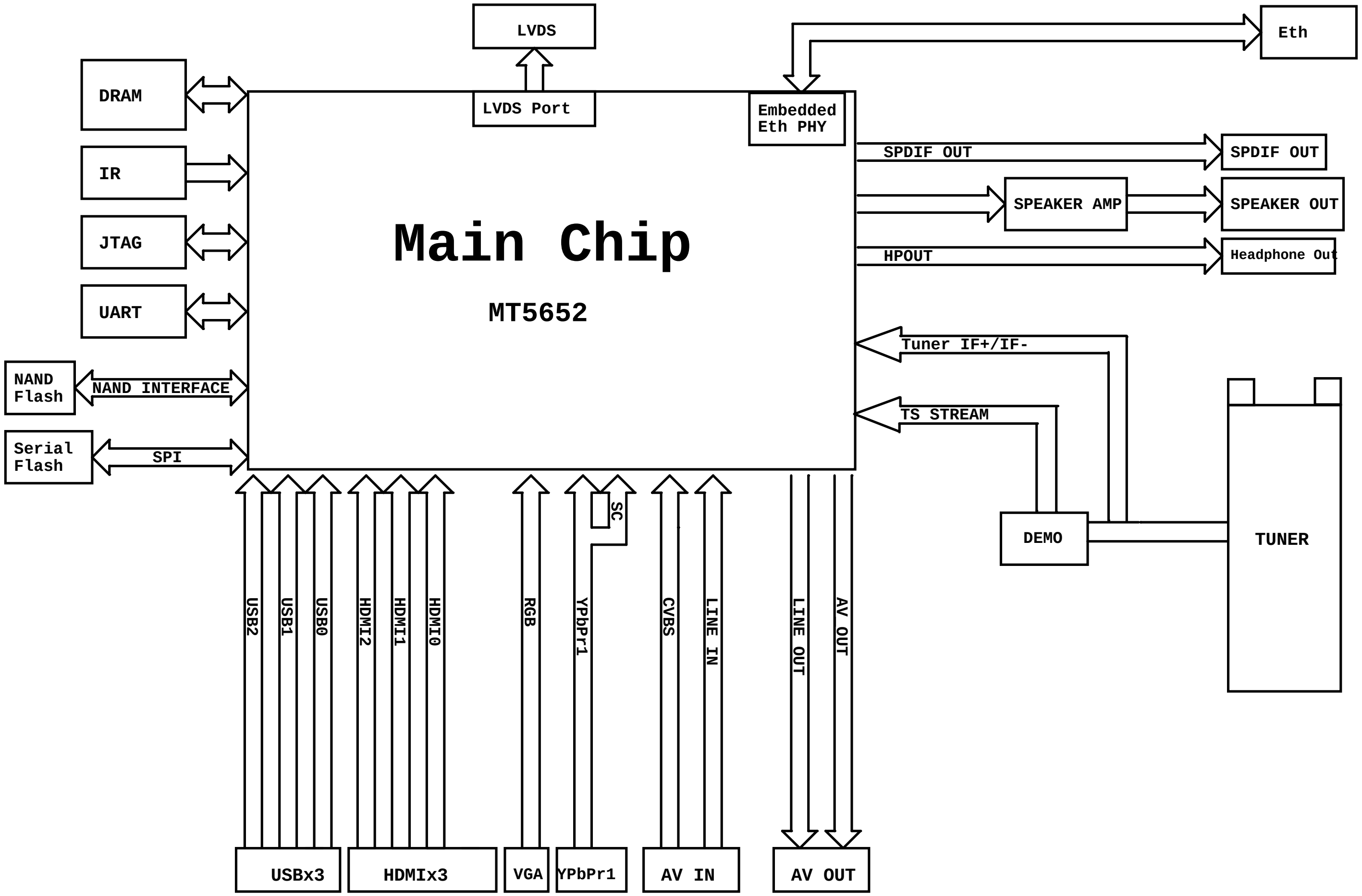
LVDS
LVDS Port
Eth
Embedded Eth PHY
DRAM
IR
JTAG
UART
Main Chip
MT5652
NAND Flash
NAND INTERFACE
Serial Flash
SPI
SPDIF OUT
SPDIF OUT
SPEAKER AMP
SPEAKER OUT
HPOUT
Headphone Out
Tuner IF+/IF-
TS STREAM
DEMO
TUNER
USB2
USB1
USB0
HDMI2
HDMI1
HDMI0
RGB
YPbPr1
SC
CVBS
LINE IN
LINE OUT
AV OUT
USBx3
HDMIx3
VGA
YPbPr1
AV IN
AV OUT

与5419比区别 VER0.1

P_03增加C654，C655
P_04加入0欧电阻R743 R744 R745 R746
P_08 XS5插头改为转接头
P_12 多R738,R739,R740,R741,R742
去掉i2c 0欧电阻R373，R374
增加屏之间I2C的MOS隔离
P_14去掉一路USB

R711 NC
R41 NC
R233 NC

Hisense Electric Co.,LTD
Title INDEX
Size A2
Document Number MT5652
Rev 1.0
Date: Tuesday, November 12, 2013
Sheet 1 of 17

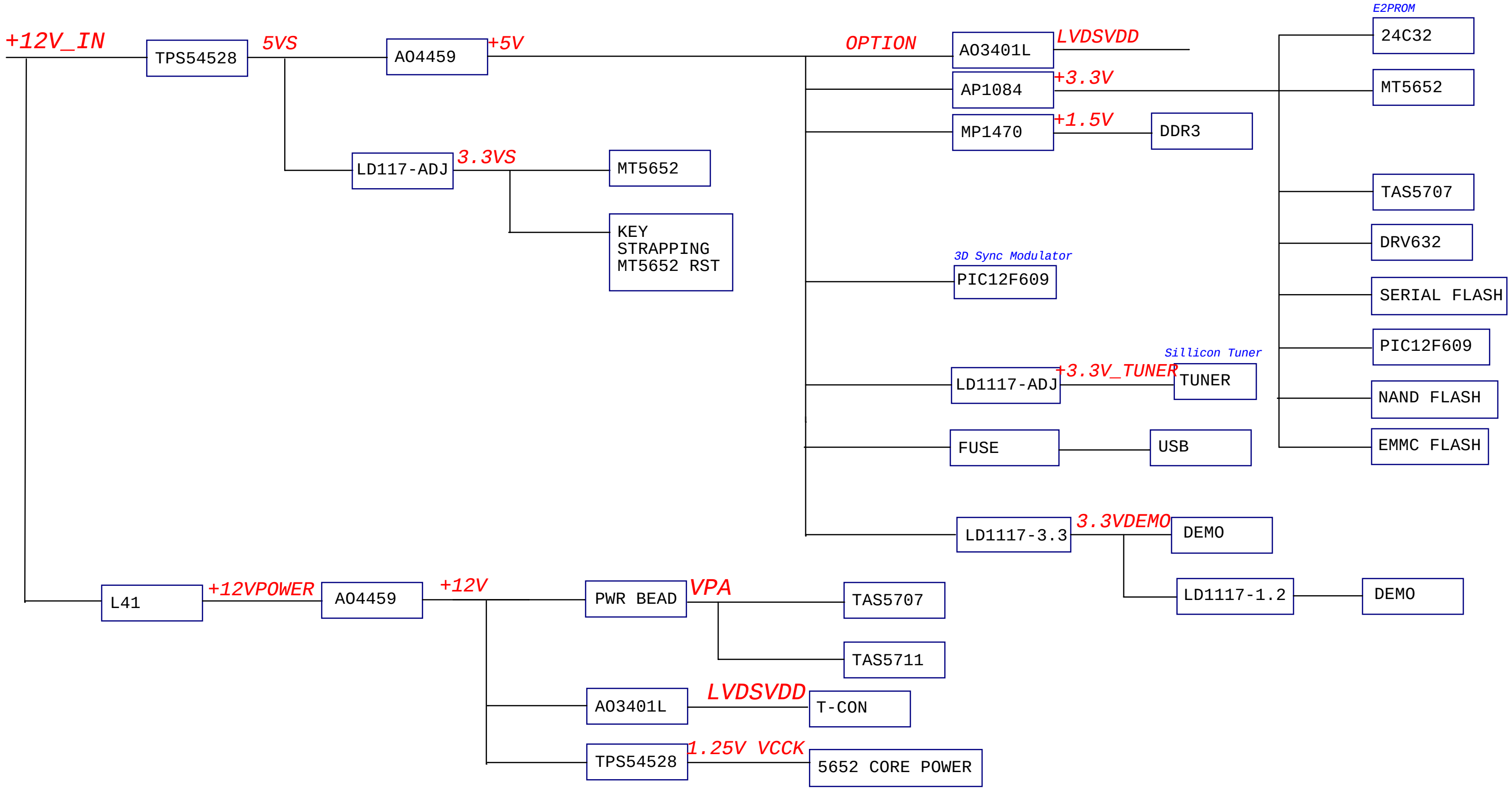
+12V_IN
TPS54528
5VS
AO4459
+5V
OPTION
AO3401L
LVDSVDD
AP1084
+3.3V
MP1470
+1.5V
DDR3
E2PROM
24C32
MT5652
LD117-ADJ
3.3VS
MT5652
KEY
STRAPPING
MT5652 RST
TAS5707
DRV632
SERIAL FLASH
3D Sync Modulator
PIC12F609
PIC12F609
Sillicon Tuner
LD1117-ADJ
+3.3V_TUNER
TUNER
NAND FLASH
FUSE
USB
EMMC FLASH
LD1117-3.3
3.3VDEMO
DEMO
LD1117-1.2
DEMO
L41
+12VPOWER
AO4459
+12V
PWR BEAD
VPA
TAS5707
TAS5711
AO3401L
LVDSVDD
T-CON
TPS54528
1.25V VCCK
5652 CORE POWER

Hisense Electric Co.,LTD

Title:

Power Tree

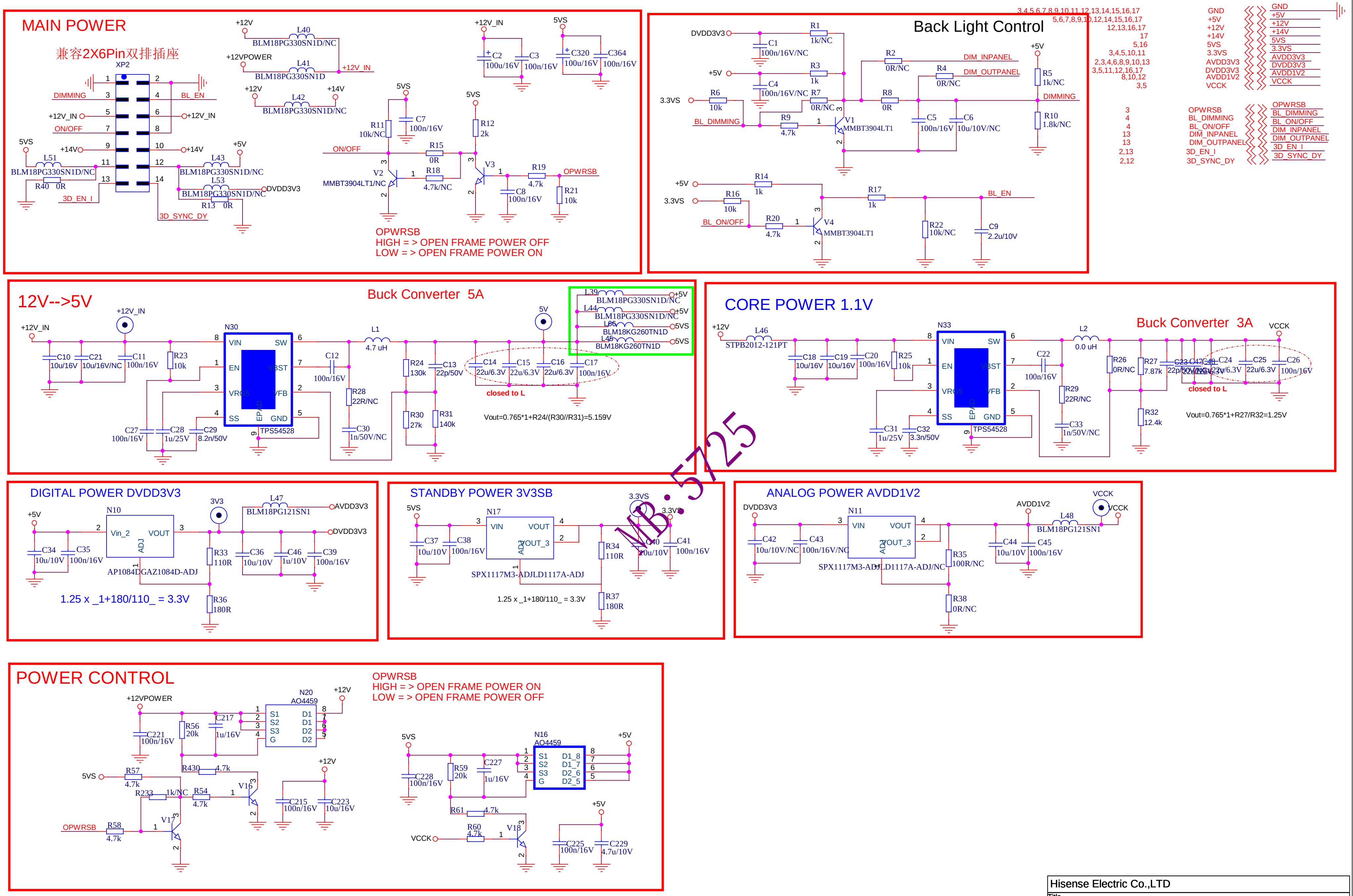
MAIN POWER
兼容2X6Pin双排插座
XP2
BLM18PG330SN1D/NC
BLM18PG330SN1D
+12V_IN
+12VPOWER
+14V
5VS
DIMMING
BL_EN
ON/OFF
3D_EN_I
3D_SYNC_DY
DVDD3V3
OPWRSB
MMBT3904LT1/NC
OPWRSB
HIGH = > OPEN FRAME POWER OFF
LOW = > OPEN FRAME POWER ON
Back Light Control
DIM_INPANEL
DIM_OUTPANEL
BL_DIMMING
BL_ON/OFF
MMBT3904LT1
12V-->5V
Buck Converter 5A
TPS54528
BLM18KG260TN1D
closed to L
Vout=0.765*1+R24/(R30//R31)=5.159V
CORE POWER 1.1V
Buck Converter 3A
STPB2012-121PT
Vout=0.765*1+R27/R32=1.25V
DIGITAL POWER DVDD3V3
AP1084DGAZ1084D-ADJ
BLM18PG121SN1
1.25 x _1+180/110_ = 3.3V
STANDBY POWER 3V3SB
SPX1117M3-ADJLD1117A-ADJ
1.25 x _1+180/110_ = 3.3V
ANALOG POWER AVDD1V2
SPX1117M3-ADJLD1117A-ADJ/NC
POWER CONTROL
AO4459
OPWRSB
HIGH = > OPEN FRAME POWER ON
LOW = > OPEN FRAME POWER OFF
VCCK

MB.5725

Hisense Electric Co.,LTD

Title
POWER AND INVERTOR

Size	Document Number	Rev
A3	MT5652	1.0

Date: Tuesday, November 12, 2013 Sheet 2 of 17

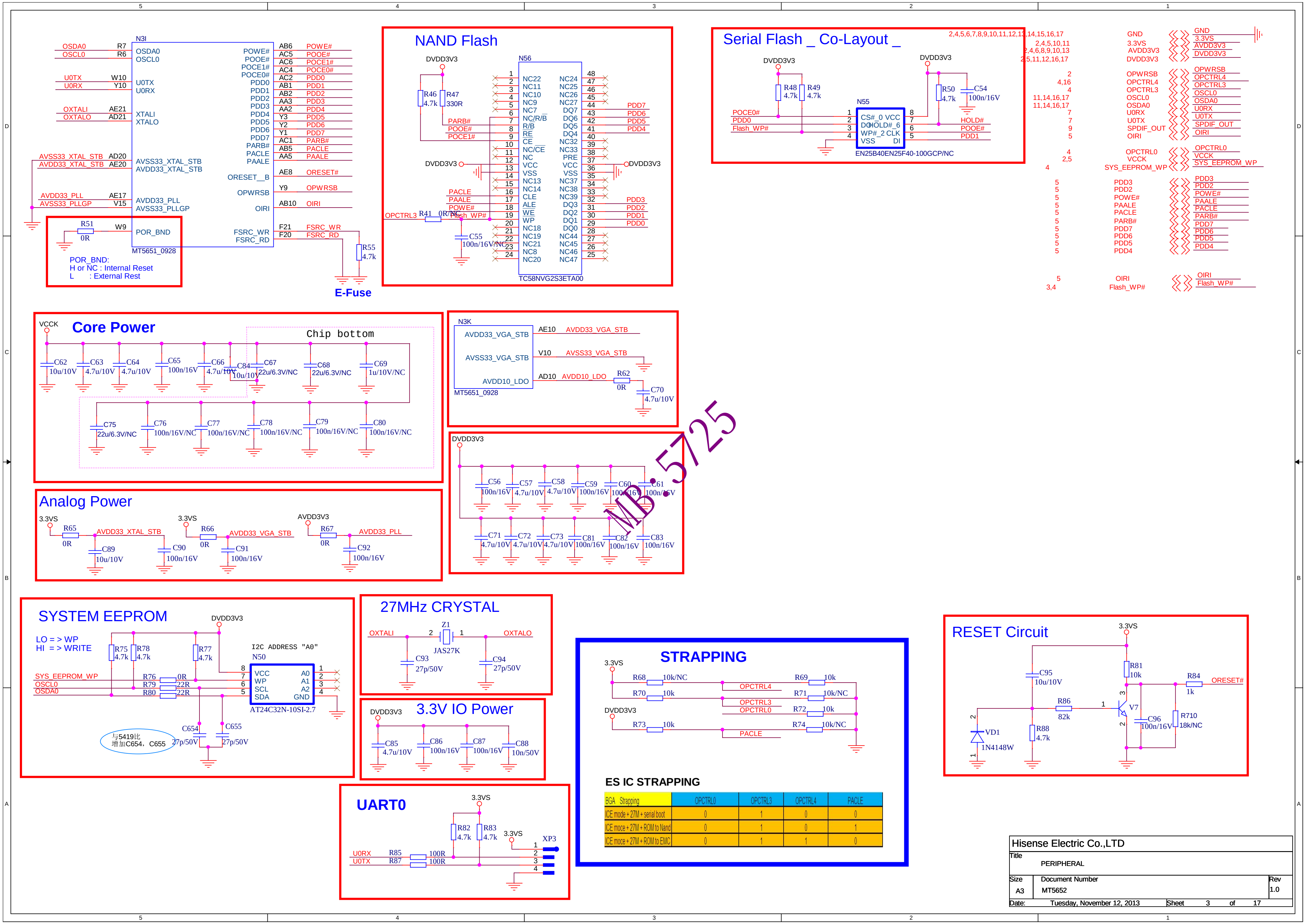
N3I
OSDA0 R7 OSDA0
OSCL0 R6 OSCL0
U0TX W10 U0TX
U0RX Y10 U0RX
OXTALI AE21 XTALI
OXTALO AD21 XTALO
AVSS33_XTAL_STB AD20 AVSS33_XTAL_STB
AVDD33_XTAL_STB AE20 AVDD33_XTAL_STB
AVDD33_PLL AE17 AVDD33_PLL
AVSS33_PLLGP V15 AVSS33_PLLGP
R51 0R W9 POR_BND
MT5651_0928
POR_BND:
H or NC : Internal Reset
L : External Rest
POWE# AB6 POWE#
POOE# AC5 POOE#
POCE1# AC6 POCE1#
POCE0# AC4 POCE0#
PDD0 AC2 PDD0
PDD1 AB1 PDD1
PDD2 AB2 PDD2
PDD3 AA3 PDD3
PDD4 AA2 PDD4
PDD5 Y3 PDD5
PDD6 Y2 PDD6
PDD7 Y1 PDD7
PARB# AC1 PARB#
PACLE AB5 PACLE
PAALE AA5 PAALE
ORESET_B AE8 ORESET#
OPWRSB Y9 OPWRSB
OIRI AB10 OIRI
FSRC_WR F21 FSRC_WR
FSRC_RD F20 FSRC_RD
R55 4.7k
E-Fuse
NAND Flash
DVDD3V3
R46 4.7k
R47 330R
N56
PARB#
POOE#
POCE1#
DVDD3V3
PACLE
PAALE
POWE#
OPCTRL3 R41 0R/NC Flash_WP#
C55 100n/16V/NC
NC22 NC11 NC10 NC9 NC7 NC/R/B R/B RE CE NC/CE NC VCC VSS NC13 NC14 CLE ALE WE WP NC18 NC19 NC21 NC8 NC20
NC24 NC25 NC26 NC27 DQ7 DQ6 DQ5 DQ4 NC32 NC33 PRE VCC VSS NC37 NC38 NC39 DQ3 DQ2 DQ1 DQ0 NC44 NC45 NC46 NC47
PDD7 PDD6 PDD5 PDD4 PDD3 PDD2 PDD1 PDD0
DVDD3V3
TC58NVG2S3ETA00
Serial Flash _ Co-Layout _
DVDD3V3
R48 4.7k
R49 4.7k
POCE0#
PDD0
Flash_WP#
N55
CS#_0 VCC
DOHOLD#_6
WP#_2 CLK
VSS DI
DVDD3V3
R50 4.7k
C54 100n/16V
HOLD#
POOE#
PDD1
EN25B40EN25F40-100GCP/NC
2,4,5,6,7,8,9,10,11,12,13,14,15,16,17 GND GND
2,4,5,10,11 3.3VS 3.3VS
2,4,6,8,9,10,13 AVDD3V3 AVDD3V3
2,5,11,12,16,17 DVDD3V3 DVDD3V3
2 OPWRSB OPWRSB
4,16 OPCTRL4 OPCTRL4
4 OPCTRL3 OPCTRL3
11,14,16,17 OSCL0 OSCL0
11,14,16,17 OSDA0 OSDA0
7 U0RX U0RX
7 U0TX U0TX
9 SPDIF_OUT SPDIF_OUT
5 OIRI OIRI
4 OPCTRL0 OPCTRL0
2,5 VCCK VCCK
4 SYS_EEPROM_WP SYS_EEPROM_WP
5 PDD3 PDD3
5 PDD2 PDD2
5 POWE# POWE#
5 PAALE PAALE
5 PACLE PACLE
5 PARB# PARB#
5 PDD7 PDD7
5 PDD6 PDD6
5 PDD5 PDD5
5 PDD4 PDD4
5 OIRI OIRI
3,4 Flash_WP# Flash_WP#
Core Power
VCCK
Chip bottom
C62 10u/10V
C63 4.7u/10V
C64 4.7u/10V
C65 100n/16V
C66 4.7u/10V
C84 10u/10V
C67 22u/6.3V/NC
C68 22u/6.3V/NC
C69 1u/10V/NC
C75 22u/6.3V/NC
C76 100n/16V/NC
C77 100n/16V/NC
C78 100n/16V/NC
C79 100n/16V/NC
C80 100n/16V/NC
N3K
AVDD33_VGA_STB AE10 AVDD33_VGA_STB
AVSS33_VGA_STB V10 AVSS33_VGA_STB
AVDD10_LDO AD10 AVDD10_LDO
R62 0R
C70 4.7u/10V
MT5651_0928
DVDD3V3
C56 100n/16V
C57 4.7u/10V
C58 4.7u/10V
C59 100n/16V
C60 100n/16V
C61 100n/16V
C71 4.7u/10V
C72 4.7u/10V
C73 4.7u/10V
C81 100n/16V
C82 100n/16V
C83 100n/16V
MB.5725
Analog Power
3.3VS R65 0R AVDD33_XTAL_STB
C89 10u/10V
3.3VS R66 0R AVDD33_VGA_STB
C90 100n/16V
C91 100n/16V
AVDD3V3 R67 0R AVDD33_PLL
C92 100n/16V
SYSTEM EEPROM
LO = > WP
HI = > WRITE
DVDD3V3
R75 4.7k
R78 4.7k
R77 4.7k
I2C ADDRESS "A0"
N50
SYS_EEPROM_WP R76 0R
OSCL0 R79 22R
OSDA0 R80 22R
VCC A0
WP A1
SCL A2
SDA GND
AT24C32N-10SI-2.7
C654 27p/50V
C655 27p/50V
与5419比
增加C654、C655
27MHz CRYSTAL
OXTALI Z1 OXTALO
JAS27K
C93 27p/50V
C94 27p/50V
3.3V IO Power
DVDD3V3
C85 4.7u/10V
C86 100n/16V
C87 100n/16V
C88 10n/50V
UART0
3.3VS
R82 4.7k
R83 4.7k
3.3VS
XP3
U0RX R85 100R
U0TX R87 100R
STRAPPING
3.3VS
R68 10k/NC
R69 10k
OPCTRL4
R70 10k
R71 10k/NC
OPCTRL3
OPCTRL0
R72 10k
DVDD3V3
R73 10k
R74 10k/NC
PACLE
RESET Circuit
3.3VS
C95 10u/10V
R81 10k
R84 1k
ORESET#
R86 82k
V7
C96 100n/16V
R710 18k/NC
VD1 1N4148W
R88 4.7k

ES IC STRAPPING

BGA Strapping	OPCTRL0	OPCTRL3	OPCTRL4	PACLE
ICE mode + 27M + serial boot	0	1	0	0
ICE moce + 27M + ROM to Nand	0	1	0	1
ICE moce + 27M + ROM to EMC	0	1	1	0

Hisense Electric Co.,LTD

Title	PERIPHERAL	
Size A3	Document Number MT5652	Rev 1.0
Date: Tuesday, November 12, 2013	Sheet 3 of 17	

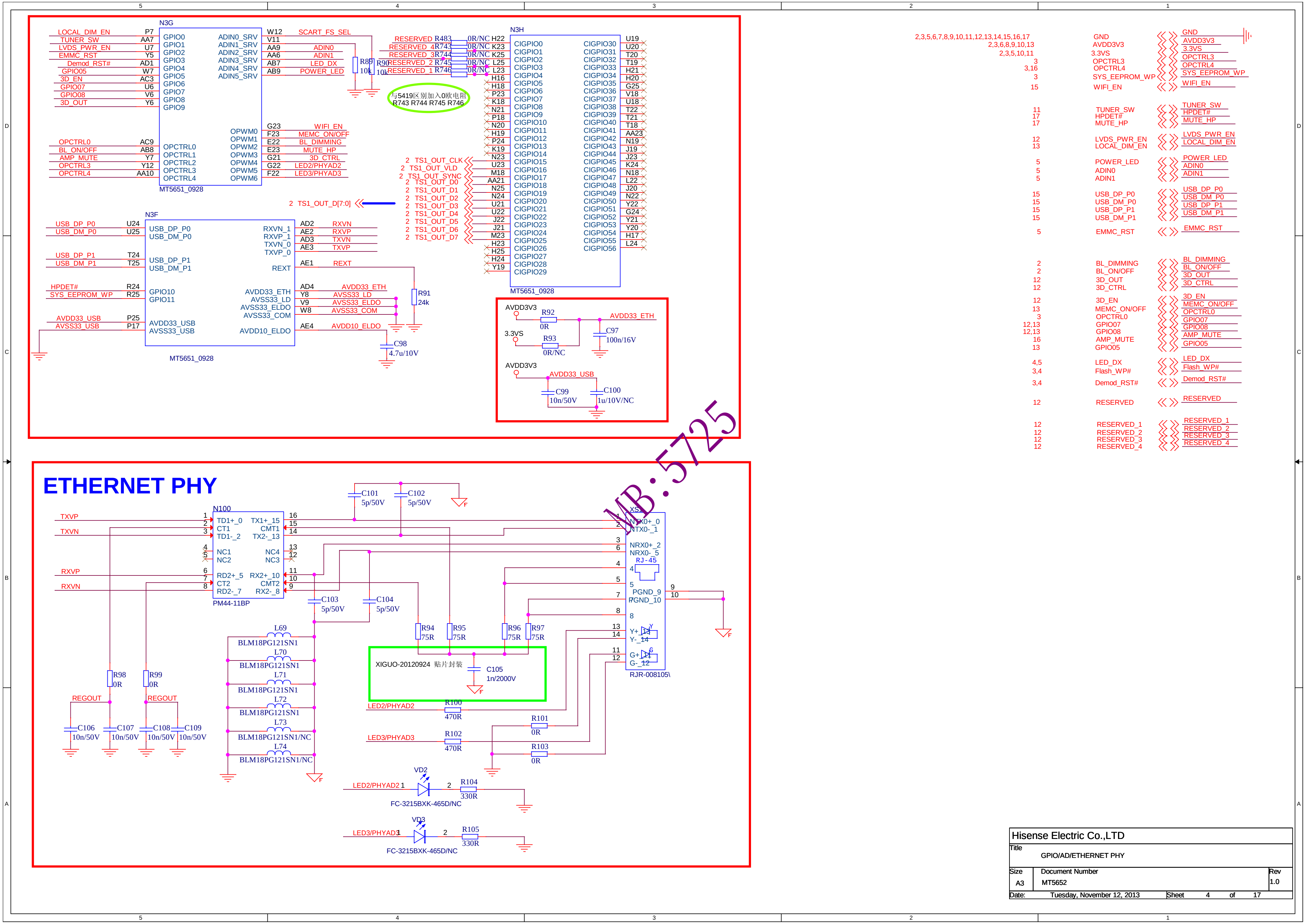
N3G
LOCAL_DIM_EN
TUNER_SW
LVDS_PWR_EN
EMMC_RST
Demod_RST#
GPIO05
3D_EN
GPIO07
GPIO08
3D_OUT
GPIO0
GPIO1
GPIO2
GPIO3
GPIO4
GPIO5
GPIO6
GPIO7
GPIO8
GPIO9
ADIN0_SRV
ADIN1_SRV
ADIN2_SRV
ADIN3_SRV
ADIN4_SRV
ADIN5_SRV
SCART_FS_SEL
ADIN0
ADIN1
LED_DX
POWER_LED
R89 10k
R90 10k
OPCTRL0
BL_ON/OFF
AMP_MUTE
OPCTRL3
OPCTRL4
OPWM0
OPWM1
OPWM2
OPWM3
OPWM4
OPWM5
OPWM6
WIFI_EN
MEMC_ON/OFF
BL_DIMMING
MUTE_HP
3D_CTRL
LED2/PHYAD2
LED3/PHYAD3
MT5651_0928
RESERVED R483 0R/NC
RESERVED_4 R743 0R/NC
RESERVED_3 R744 0R/NC
RESERVED_2 R745 0R/NC
RESERVED_1 R746 0R/NC
与5419区别加入0欧电阻
R743 R744 R745 R746
N3H
CIGPIO0 … CIGPIO56
TS1_OUT_CLK
TS1_OUT_VLD
TS1_OUT_SYNC
TS1_OUT_D0
TS1_OUT_D1
TS1_OUT_D2
TS1_OUT_D3
TS1_OUT_D4
TS1_OUT_D5
TS1_OUT_D6
TS1_OUT_D7
2 TS1_OUT_D[7:0]
N3F
USB_DP_P0
USB_DM_P0
USB_DP_P1
USB_DM_P1
HPDET#
SYS_EEPROM_WP
GPIO10
GPIO11
AVDD33_USB
AVSS33_USB
RXVN_1
RXVP_1
TXVN_0
TXVP_0
RXVN
RXVP
TXVN
TXVP
REXT
R91 24k
AVDD33_ETH
AVSS33_LD
AVSS33_ELDO
AVSS33_COM
AVDD10_ELDO
C98 4.7u/10V
AVDD3V3
R92 0R
3.3VS
R93 0R/NC
C97 100n/16V
AVDD33_USB
C99 10n/50V
C100 1u/10V/NC
GND
AVDD3V3
3.3VS
OPCTRL3
OPCTRL4
SYS_EEPROM_WP
WIFI_EN
TUNER_SW
HPDET#
MUTE_HP
LVDS_PWR_EN
LOCAL_DIM_EN
POWER_LED
ADIN0
ADIN1
USB_DP_P0
USB_DM_P0
USB_DP_P1
USB_DM_P1
EMMC_RST
BL_DIMMING
BL_ON/OFF
3D_OUT
3D_CTRL
3D_EN
MEMC_ON/OFF
OPCTRL0
GPIO07
GPIO08
AMP_MUTE
GPIO05
LED_DX
Flash_WP#
Demod_RST#
RESERVED
RESERVED_1
RESERVED_2
RESERVED_3
RESERVED_4
2,3,5,6,7,8,9,10,11,12,13,14,15,16,17
2,3,6,8,9,10,13
2,3,5,10,11
MB:5725
ETHERNET PHY
N100
PM44-11BP
TD1+_0
CT1
TD1-_2
NC1
NC2
RD2+_5
CT2
RD2-_7
TX1+_15
CMT1
TX2-_13
NC4
NC3
RX2+_10
CMT2
RX2-_8
C101 5p/50V
C102 5p/50V
C103 5p/50V
C104 5p/50V
XS1
NTX0+_0
NTX0-_1
NRX0+_2
NRX0-_5
RJ-45
PGND_9
PGND_10
Y+
Y-
G+
G-
RJR-008105\
R94 75R
R95 75R
R96 75R
R97 75R
XIGUO-20120924 贴片封装
C105 1n/2000V
R98 0R
R99 0R
REGOUT
C106 10n/50V
C107 10n/50V
C108 10n/50V
C109 10n/50V
L69 BLM18PG121SN1
L70 BLM18PG121SN1
L71 BLM18PG121SN1
L72 BLM18PG121SN1
L73 BLM18PG121SN1/NC
L74 BLM18PG121SN1/NC
R100 470R
R101 0R
R102 470R
R103 0R
VD2
R104 330R
FC-3215BXK-465D/NC
VD3
R105 330R
FC-3215BXK-465D/NC

Hisense Electric Co.,LTD

Title GPIO/AD/ETHERNET PHY

Size	Document Number	Rev
A3	MT5652	1.0

Date: Tuesday, November 12, 2013 Sheet 4 of 17

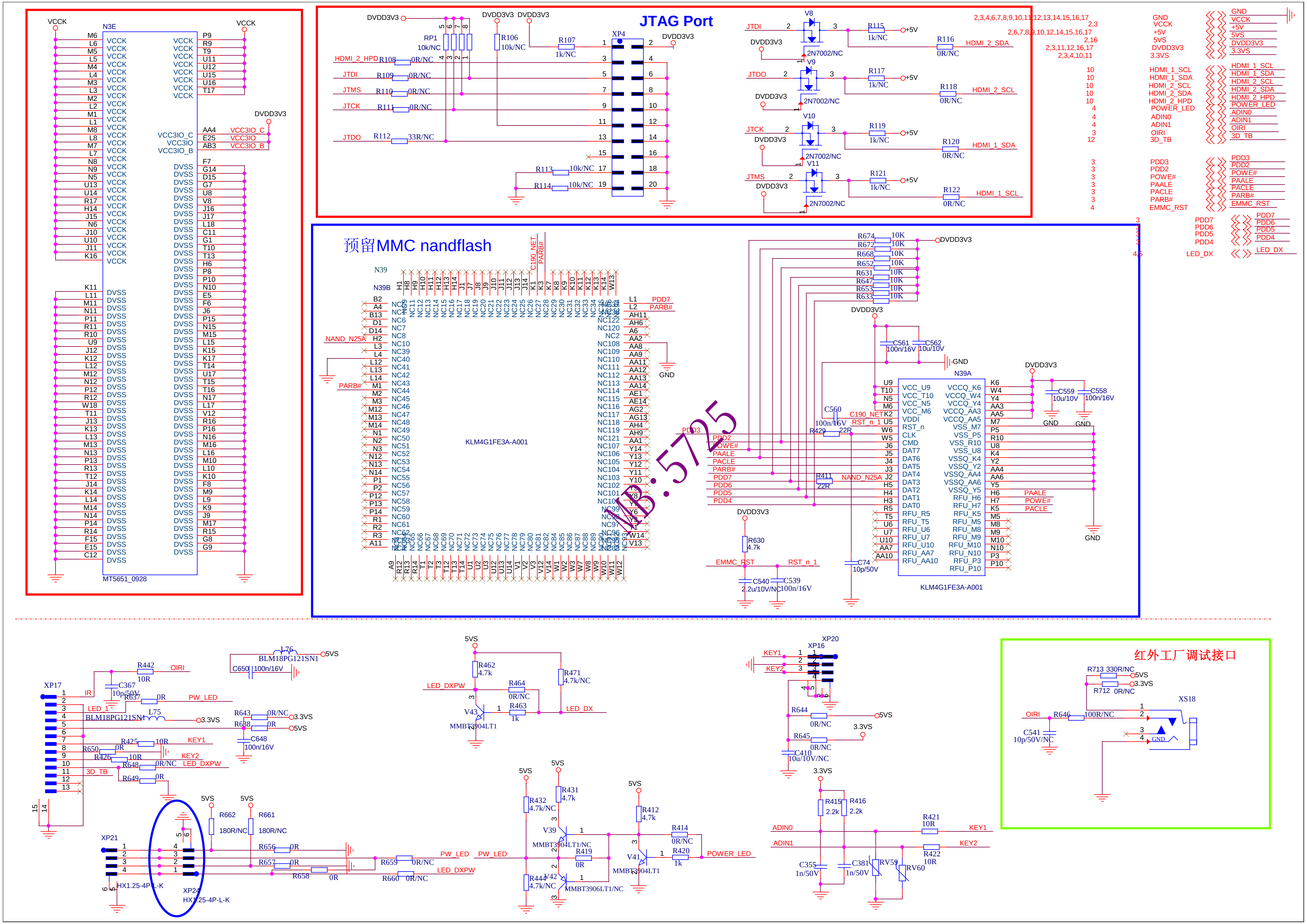
JTAG Port
预留MMC nandflash
红外工厂调试接口
N3E
MT5651_0928
VCCK
DVDD3V3
VCC3IO_C
VCC3IO
VCC3IO_B
DVSS
XP4
RP1 10k/NC
R106 10k/NC
R107 1k/NC
HDMI_2_HPD
JTDI
JTMS
JTCK
JTDO
R108 0R/NC
R109 0R/NC
R110 0R/NC
R111 0R/NC
R112 33R/NC
R113 10k/NC
R114 10k/NC
V8 2N7002/NC
V9 2N7002/NC
V10 2N7002/NC
V11 2N7002/NC
R115 1k/NC
R116 0R/NC
R117 1k/NC
R118 0R/NC
R119 1k/NC
R120 0R/NC
R121 1k/NC
R122 0R/NC
+5V
HDMI_2_SDA
HDMI_2_SCL
HDMI_1_SDA
HDMI_1_SCL
GND
5VS
3.3VS
POWER_LED
ADIN0
ADIN1
OIRI
3D_TB
PDD3
PDD2
POWE#
PAALE
PACLE
PARB#
EMMC_RST
PDD7
PDD6
PDD5
PDD4
LED_DX
N39
N39B
N39A
KLM4G1FE3A-A001
C190_NET
NAND_N25A
RST_n_1
C561 100n/16V
C562 10u/10V
C559 10u/10V
C558 100n/16V
C560 100n/16V
R429 22R
R411 22R
R630 4.7k
C540 2.2u/10V/NC
C539 100n/16V
C74 10p/50V
R674 10K
R672 10K
R668 10K
R652 10K
R631 10K
R647 10K
R653 10K
R633 10K
XP17
IR
LED_1
PW_LED
KEY1
KEY2
LED_DXPW
R442 10R
C367 10p/50V
R637 0R
L75 BLM18PG121SN1
L76 BLM18PG121SN1
C650 100n/16V
R643 0R/NC
R638 0R
C648 100n/16V
R425 10R
R650 0R
R426 10R
R648 0R/NC
R649 0R
XP21 HX1.25-4P-L-K
XP24 HX1.25-4P-L-K
R662 180R/NC
R661 180R/NC
R656 0R
R657 0R
R658 0R
R659 0R/NC
R660 0R/NC
R462 4.7k
R471 4.7k/NC
R464 0R/NC
R463 1k
V43 MMBT3904LT1
R432 4.7k/NC
R431 4.7k
V39 MMBT3904LT1/NC
R419 0R
R444 4.7k/NC
V42 MMBT3906LT1/NC
R412 4.7k
R414 0R/NC
R420 1k
V41 MMBT3904LT1
XP16
XP20
R644 0R/NC
R645 0R/NC
C410 10u/10V/NC
R415 2.2k
R416 2.2k
R421 10R
R422 10R
C355 1n/50V
C381 1n/50V
RV59
RV60
R713 330R/NC
R712 0R/NC
R646 100R/NC
C541 10p/50V/NC
XS18

MB.5725

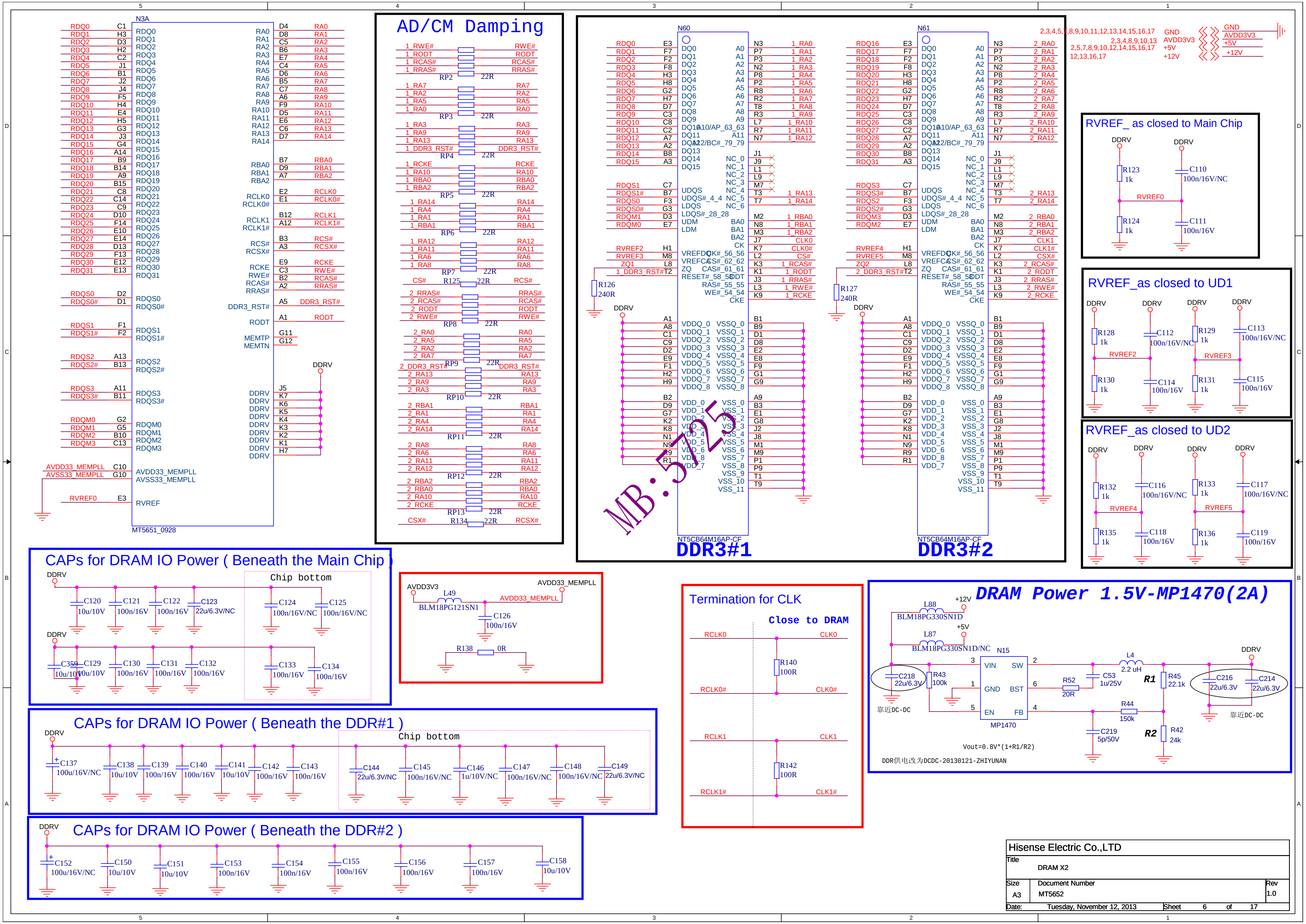
N3A
MT5651_0928
AD/CM Damping
RP2 22R
RP3 22R
RP4 22R
RP5 22R
RP6 22R
RP7 22R
R125 22R
RP8 22R
RP9 22R
RP10 22R
RP11 22R
RP12 22R
RP13 22R
R134 22R
N60
NT5CB64M16AP-CF
DDR3#1
N61
NT5CB64M16AP-CF
DDR3#2
R126 240R
R127 240R
MB:5725
RVREF_ as closed to Main Chip
R123 1k
R124 1k
C110 100n/16V/NC
C111 100n/16V
RVREF0
RVREF_as closed to UD1
R128 1k
R129 1k
R130 1k
R131 1k
C112 100n/16V/NC
C113 100n/16V/NC
C114 100n/16V
C115 100n/16V
RVREF2
RVREF3
RVREF_as closed to UD2
R132 1k
R133 1k
R135 1k
R136 1k
C116 100n/16V/NC
C117 100n/16V/NC
C118 100n/16V
C119 100n/16V
RVREF4
RVREF5
CAPs for DRAM IO Power (Beneath the Main Chip)
Chip bottom
C120 10u/10V
C121 100n/16V
C122 100n/16V
C123 22u/6.3V/NC
C124 100n/16V/NC
C125 100n/16V/NC
C359 10u/10V
C129 10u/10V
C130 100n/16V
C131 100n/16V
C132 100n/16V
C133 100n/16V
C134 100n/16V
AVDD3V3
AVDD33_MEMPLL
L49 BLM18PG121SN1
C126 100n/16V
R138 0R
Termination for CLK
Close to DRAM
RCLK0 CLK0
RCLK0# CLK0#
RCLK1 CLK1
RCLK1# CLK1#
R140 100R
R142 100R
DRAM Power 1.5V-MP1470(2A)
L88 BLM18PG330SN1D
L87 BLM18PG330SN1D/NC
+12V
+5V
N15 MP1470
VIN SW GND BST EN FB
C218 22u/6.3V
R43 100k
R52 20R
C53 1u/25V
L4 2.2 uH
R1 R45 22.1k
R2 R42 24k
R44 150k
C219 5p/50V
C216 22u/6.3V
C214 22u/6.3V
DDRV
靠近DC-DC
Vout=0.8V*(1+R1/R2)
DDR供电改为DCDC-20130121-ZHIYUNAN
CAPs for DRAM IO Power (Beneath the DDR#1)
Chip bottom
C137 100u/16V/NC
C138 10u/10V
C139 100n/16V
C140 100n/16V
C141 10u/10V
C142 100n/16V
C143 100n/16V
C144 22u/6.3V/NC
C145 100n/16V/NC
C146 1u/10V/NC
C147 100n/16V/NC
C148 100n/16V/NC
C149 22u/6.3V/NC
CAPs for DRAM IO Power (Beneath the DDR#2)
C152 100u/16V/NC
C150 10u/10V
C151 10u/10V
C153 100n/16V
C154 100n/16V
C155 100n/16V
C156 100n/16V
C157 100n/16V
C158 10u/10V
GND AVDD3V3 +5V +12V

Hisense Electric Co.,LTD

Title
DRAM X2

Size	Document Number	Rev
A3	MT5652	1.0

Date: Tuesday, November 12, 2013 Sheet 6 of 17

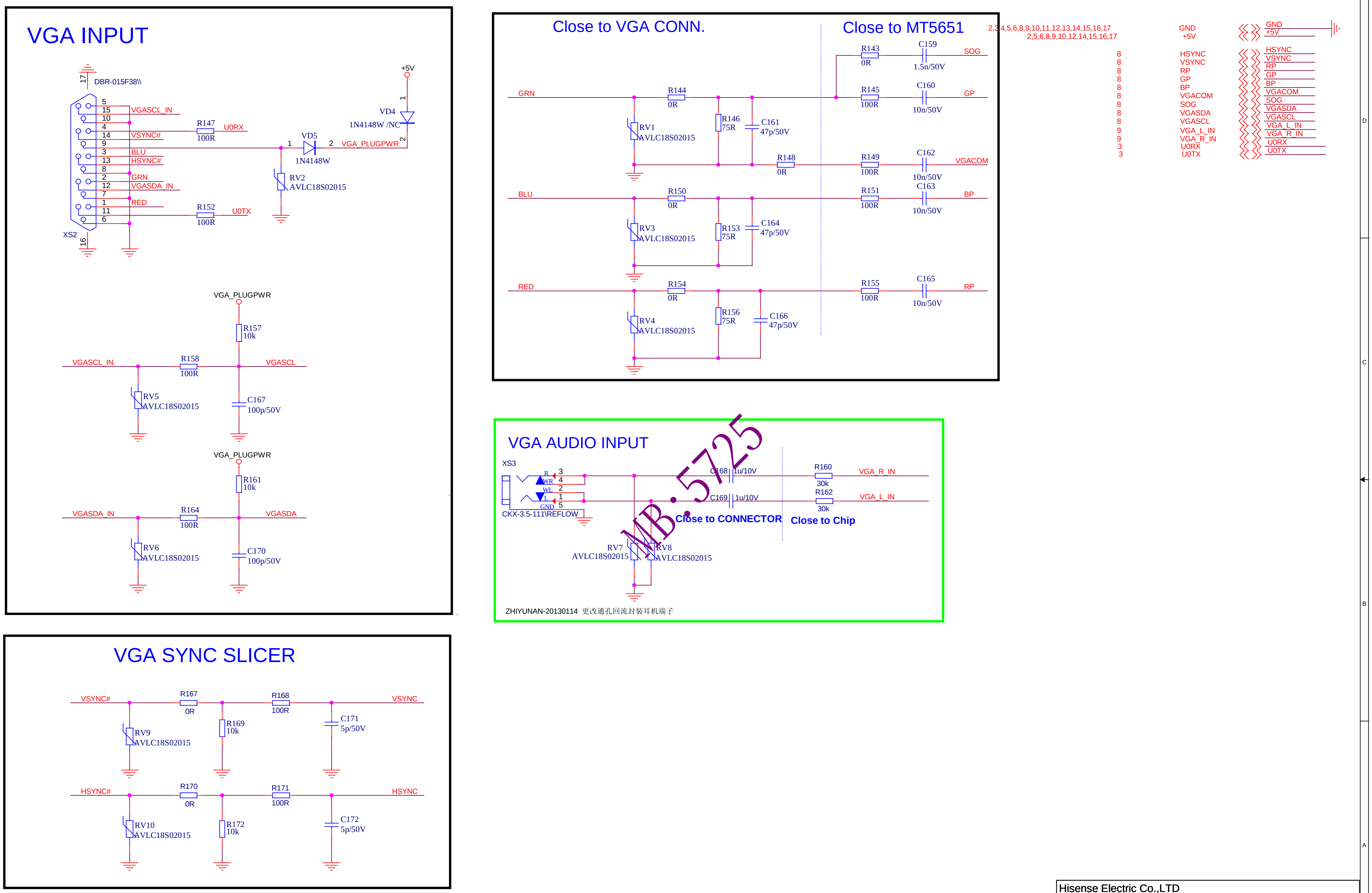
VGA INPUT
DBR-015F38\\
XS2
17
16
5
15
10
4
14
9
3
13
8
2
12
7
1
11
6
VGASCL_IN
VSYNC#
BLU
HSYNC#
GRN
VGASDA_IN
RED
R147
100R
U0RX
R152
100R
U0TX
+5V
VD4
1N4148W /NC
VD5
1N4148W
VGA_PLUGPWR
RV2
AVLC18S02015
VGA_PLUGPWR
R157
10k
VGASCL_IN
R158
100R
VGASCL
RV5
AVLC18S02015
C167
100p/50V
VGA_PLUGPWR
R161
10k
VGASDA_IN
R164
100R
VGASDA
RV6
AVLC18S02015
C170
100p/50V
Close to VGA CONN.
Close to MT5651
R143
0R
C159
1.5n/50V
SOG
GRN
R144
0R
R146
75R
C161
47p/50V
RV1
AVLC18S02015
R145
100R
C160
10n/50V
GP
R148
0R
R149
100R
C162
10n/50V
VGACOM
BLU
R150
0R
RV3
AVLC18S02015
R153
75R
C164
47p/50V
R151
100R
C163
10n/50V
BP
RED
R154
0R
RV4
AVLC18S02015
R156
75R
C166
47p/50V
R155
100R
C165
10n/50V
RP
2,3,4,5,6,8,9,10,11,12,13,14,15,16,17
2,5,6,8,9,10,12,14,15,16,17
GND
+5V
8 HSYNC
8 VSYNC
8 RP
8 GP
8 BP
8 VGACOM
8 SOG
8 VGASDA
8 VGASCL
9 VGA_L_IN
9 VGA_R_IN
3 U0RX
3 U0TX
GND
+5V
HSYNC
VSYNC
RP
GP
BP
VGACOM
SOG
VGASDA
VGASCL
VGA_L_IN
VGA_R_IN
U0RX
U0TX
VGA AUDIO INPUT
XS3
R
WR
WL
L
GND
3
4
2
1
5
CKX-3.5-111\REFLOW
C168
1u/10V
C169
1u/10V
R160
30k
VGA_R_IN
R162
30k
VGA_L_IN
Close to CONNECTOR
Close to Chip
RV7
AVLC18S02015
RV8
AVLC18S02015
ZHIYUNAN-20130114 更改通孔回流封装耳机端子
VGA SYNC SLICER
VSYNC#
R167
0R
R168
100R
VSYNC
RV9
AVLC18S02015
R169
10k
C171
5p/50V
HSYNC#
R170
0R
R171
100R
HSYNC
RV10
AVLC18S02015
R172
10k
C172
5p/50V

MB.5725

Hisense Electric Co.,LTD		
Title	VGA INPUT	
Size A3	Document Number MT5652	Rev 1.0
Date: Tuesday, November 12, 2013	Sheet 7 of 17	

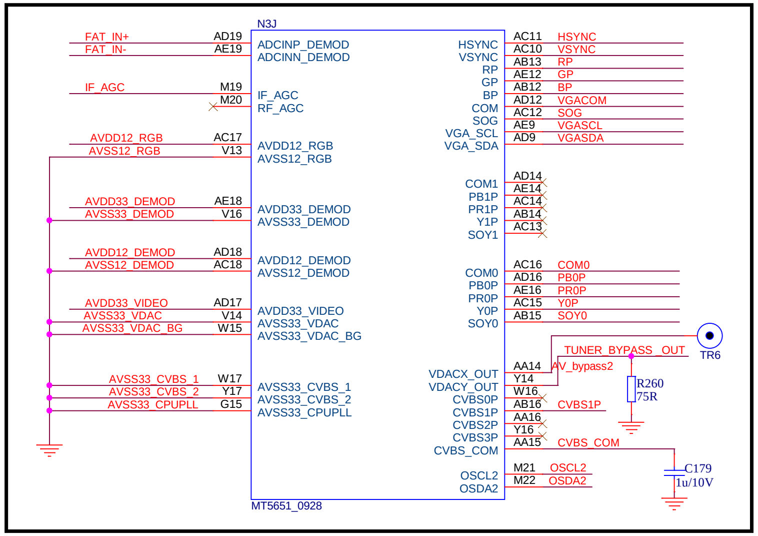
N3J
MT5651_0928
FAT_IN+ AD19 ADCINP_DEMOD
FAT_IN- AE19 ADCINN_DEMOD
IF_AGC M19 IF_AGC
M20 RF_AGC
AVDD12_RGB AC17 AVDD12_RGB
AVSS12_RGB V13 AVSS12_RGB
AVDD33_DEMOD AE18 AVDD33_DEMOD
AVSS33_DEMOD V16 AVSS33_DEMOD
AVDD12_DEMOD AD18 AVDD12_DEMOD
AVSS12_DEMOD AC18 AVSS12_DEMOD
AVDD33_VIDEO AD17 AVDD33_VIDEO
AVSS33_VDAC V14 AVSS33_VDAC
AVSS33_VDAC_BG W15 AVSS33_VDAC_BG
AVSS33_CVBS_1 W17 AVSS33_CVBS_1
AVSS33_CVBS_2 Y17 AVSS33_CVBS_2
AVSS33_CPUPLL G15 AVSS33_CPUPLL
HSYNC AC11 HSYNC
VSYNC AC10 VSYNC
RP AB13 RP
GP AE12 GP
BP AB12 BP
COM AD12 VGACOM
SOG AC12 SOG
VGA_SCL AE9 VGASCL
VGA_SDA AD9 VGASDA
COM1 AD14
PB1P AE14
PR1P AC14
Y1P AB14
SOY1 AC13
COM0 AC16 COM0
PB0P AD16 PB0P
PR0P AE16 PR0P
Y0P AC15 Y0P
SOY0 AB15 SOY0
VDACX_OUT AA14
VDACY_OUT Y14
CVBS0P W16
CVBS1P AB16 CVBS1P
CVBS2P AA16
CVBS3P Y16
CVBS_COM AA15 CVBS_COM
OSCL2 M21 OSCL2
OSDA2 M22 OSDA2
TUNER_BYPASS_OUT
AV_bypass2
TR6
R260 75R
C179 1u/10V

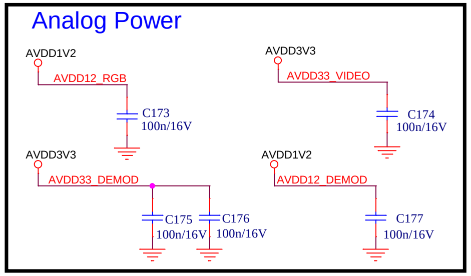
Analog Power
AVDD1V2
AVDD12_RGB
C173 100n/16V
AVDD3V3
AVDD33_VIDEO
C174 100n/16V
AVDD3V3
AVDD33_DEMOD
C175 100n/16V
C176 100n/16V
AVDD1V2
AVDD12_DEMOD
C177 100n/16V

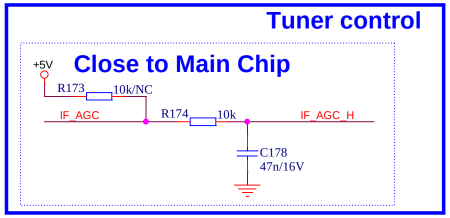
Tuner control
Close to Main Chip
+5V
R173 10k/NC
IF_AGC
R174 10k
IF_AGC_H
C178 47n/16V

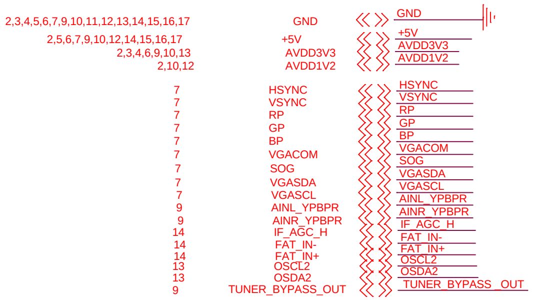
2,3,4,5,6,7,9,10,11,12,13,14,15,16,17 GND GND
2,5,6,7,9,10,12,14,15,16,17 +5V +5V
2,3,4,6,9,10,13 AVDD3V3 AVDD3V3
2,10,12 AVDD1V2 AVDD1V2
7 HSYNC HSYNC
7 VSYNC VSYNC
7 RP RP
7 GP GP
7 BP BP
7 VGACOM VGACOM
7 SOG SOG
7 VGASDA VGASDA
7 VGASCL VGASCL
9 AINL_YPBPR AINL_YPBPR
9 AINR_YPBPR AINR_YPBPR
14 IF_AGC_H IF_AGC_H
14 FAT_IN- FAT_IN-
14 FAT_IN+ FAT_IN+
13 OSCL2 OSCL2
13 OSDA2 OSDA2
9 TUNER_BYPASS_OUT TUNER_BYPASS_OUT

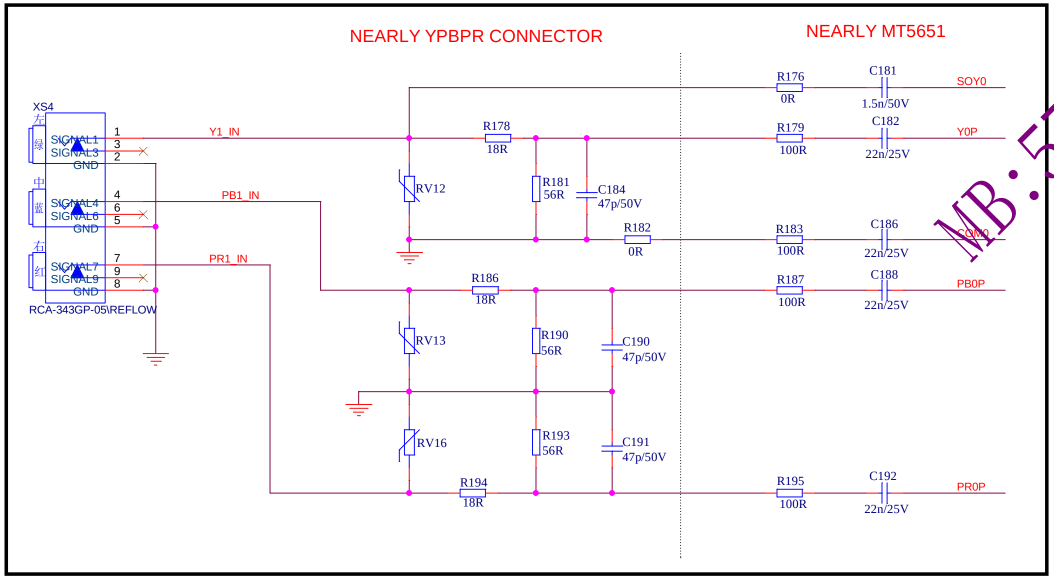
NEARLY YPBPR CONNECTOR
NEARLY MT5651
XS4
SIGNAL1
SIGNAL3
GND
SIGNAL4
SIGNAL6
GND
SIGNAL7
SIGNAL9
GND
左 绿
中 蓝
右 红
RCA-343GP-05\REFLOW
Y1_IN
PB1_IN
PR1_IN
R176 0R
C181 1.5n/50V
SOY0
R178 18R
R179 100R
C182 22n/25V
Y0P
RV12
R181 56R
C184 47p/50V
R182 0R
R183 100R
C186 22n/25V
COM0
R186 18R
R187 100R
C188 22n/25V
PB0P
RV13
R190 56R
C190 47p/50V
RV16
R193 56R
C191 47p/50V
R194 18R
R195 100R
C192 22n/25V
PR0P

MB:5725

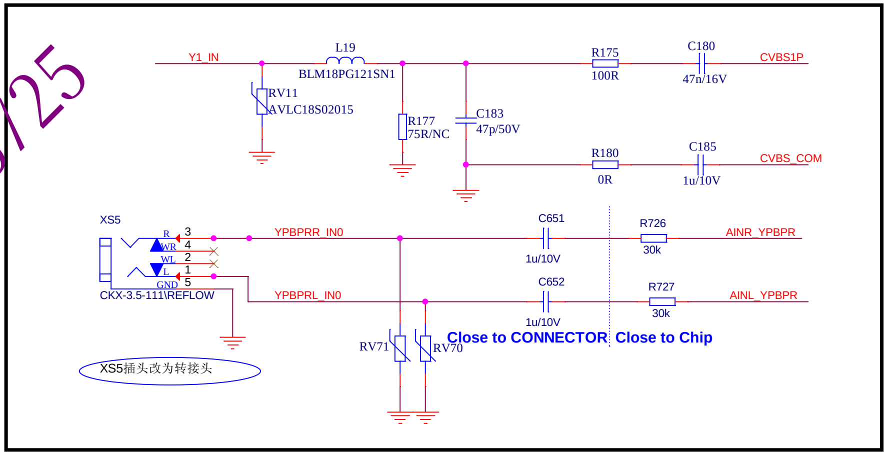
Y1_IN
L19
BLM18PG121SN1
RV11
AVLC18S02015
R177 75R/NC
C183 47p/50V
R175 100R
C180 47n/16V
CVBS1P
R180 0R
C185 1u/10V
CVBS_COM
XS5
CKX-3.5-111\REFLOW
R WR WL L GND
YPBPRR_IN0
C651 1u/10V
R726 30k
AINR_YPBPR
YPBPRL_IN0
C652 1u/10V
R727 30k
AINL_YPBPR
RV71
RV70
Close to CONNECTOR
Close to Chip
XS5插头改为转接头

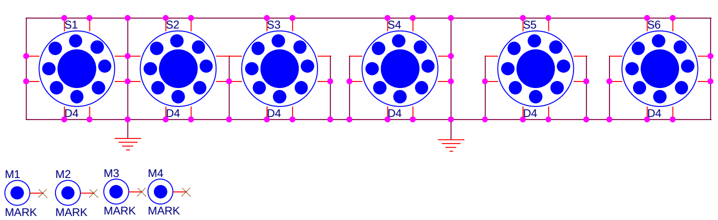
S1
S2
S3
S4
S5
S6
D4
M1
M2
M3
M4
MARK

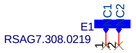
E1
C1
C2
RSAG7.308.0219

Hisense Electric Co.,LTD

Title
YPBPR/AV INPUT

Size A3
Document Number MT5652
Rev 1.0

Date: Tuesday, November 12, 2013
Sheet 8 of 17

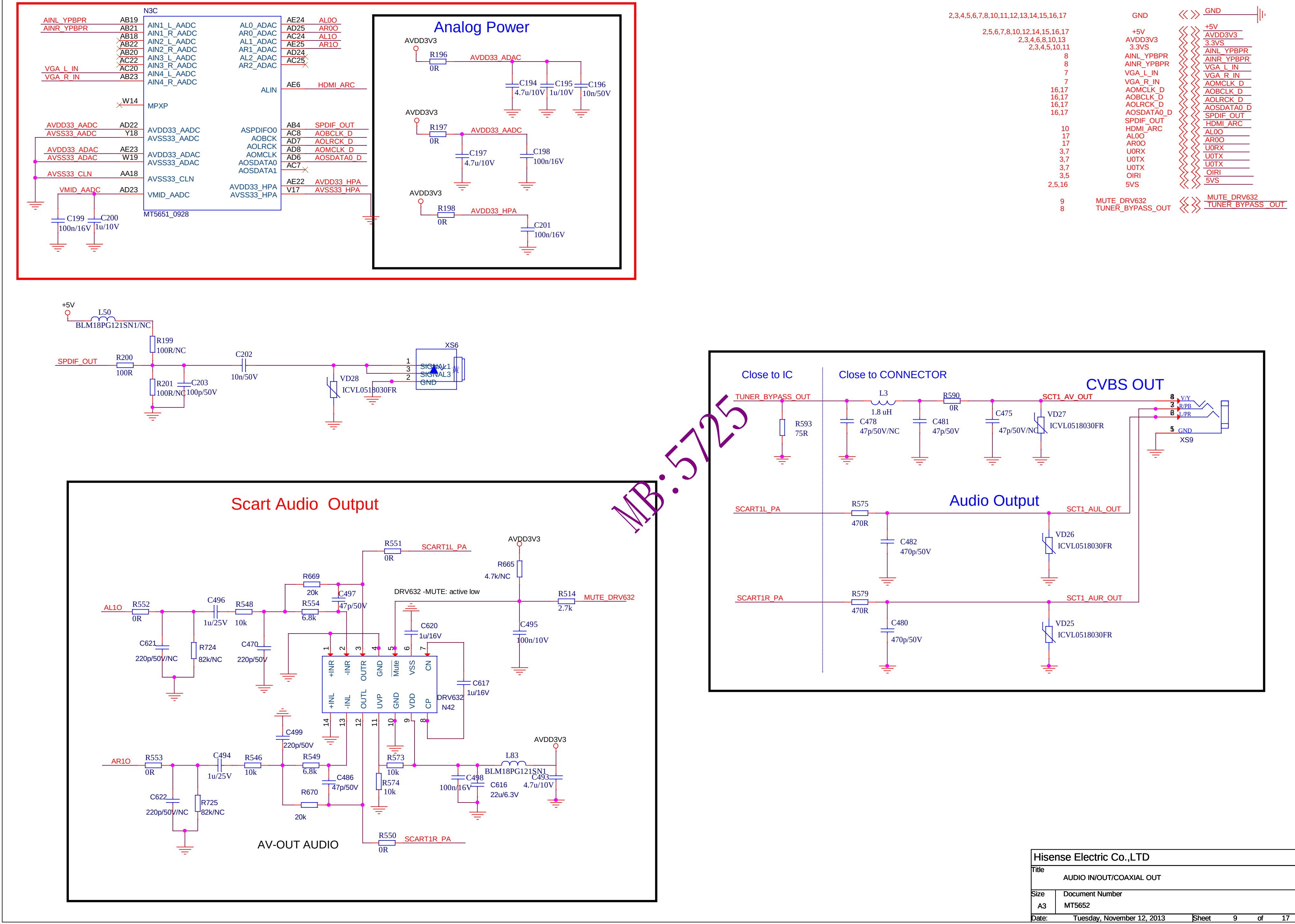

Analog Power
N3C
MT5651_0928
AINL_YPBPR AB19 AIN1_L_AADC
AINR_YPBPR AB21 AIN1_R_AADC
AB18 AIN2_L_AADC
AB22 AIN2_R_AADC
AB20 AIN3_L_AADC
AC22 AIN3_R_AADC
VGA_L_IN AC20 AIN4_L_AADC
VGA_R_IN AB23 AIN4_R_AADC
W14 MPXP
AVDD33_AADC AD22 AVDD33_AADC
AVSS33_AADC Y18 AVSS33_AADC
AVDD33_ADAC AE23 AVDD33_ADAC
AVSS33_ADAC W19 AVSS33_ADAC
AVSS33_CLN AA18 AVSS33_CLN
VMID_AADC AD23 VMID_AADC
AL0_ADAC AE24 AL0O
AR0_ADAC AD25 AR0O
AL1_ADAC AC24 AL1O
AR1_ADAC AE25 AR1O
AL2_ADAC AD24
AR2_ADAC AC25
ALIN AE6 HDMI_ARC
ASPDIFO0 AB4 SPDIF_OUT
AOBCK AC8 AOBCLK_D
AOLRCK AD7 AOLRCK_D
AOMCLK AD8 AOMCLK_D
AOSDATA0 AD6 AOSDATA0_D
AOSDATA1 AC7
AVDD33_HPA AE22 AVDD33_HPA
AVSS33_HPA V17 AVSS33_HPA
C199 100n/16V
C200 1u/10V
AVDD3V3 R196 0R AVDD33_ADAC
C194 4.7u/10V
C195 1u/10V
C196 10n/50V
AVDD3V3 R197 0R AVDD33_AADC
C197 4.7u/10V
C198 100n/16V
AVDD3V3 R198 0R AVDD33_HPA
C201 100n/16V
2,3,4,5,6,7,8,10,11,12,13,14,15,16,17 GND
2,5,6,7,8,10,12,14,15,16,17 +5V
2,3,4,6,8,10,13 AVDD3V3
2,3,4,5,10,11 3.3VS
8 AINL_YPBPR
8 AINR_YPBPR
7 VGA_L_IN
7 VGA_R_IN
16,17 AOMCLK_D
16,17 AOBCLK_D
16,17 AOLRCK_D
16,17 AOSDATA0_D
SPDIF_OUT
10 HDMI_ARC
17 AL0O
17 AR0O
3,7 U0RX
3,7 U0TX
3,7 U0TX
3,5 OIRI
2,5,16 5VS
9 MUTE_DRV632
8 TUNER_BYPASS_OUT
+5V
L50 BLM18PG121SN1/NC
R199 100R/NC
SPDIF_OUT R200 100R
R201 100R/NC
C203 100p/50V
C202 10n/50V
VD28 ICVL0518030FR
XS6
1 SIGNAL1
3 SIGNAL3
2 GND
Close to IC
Close to CONNECTOR
CVBS OUT
TUNER_BYPASS_OUT
R593 75R
L3 1.8 uH
C478 47p/50V/NC
C481 47p/50V
R590 0R
C475 47p/50V/NC
VD27 ICVL0518030FR
SCT1_AV_OUT
4 V/Y
3 R/PB
6 L/PR
5 GND
XS9
Audio Output
SCART1L_PA R575 470R
C482 470p/50V
VD26 ICVL0518030FR
SCT1_AUL_OUT
SCART1R_PA R579 470R
C480 470p/50V
VD25 ICVL0518030FR
SCT1_AUR_OUT
Scart Audio Output
AL1O R552 0R
C621 220p/50V/NC
R724 82k/NC
C496 1u/25V
R548 10k
C470 220p/50V
R669 20k
R554 6.8k
C497 47p/50V
R551 0R SCART1L_PA
AVDD3V3
R665 4.7k/NC
DRV632 -MUTE: active low
R514 2.7k MUTE_DRV632
C495 100n/10V
C620 1u/16V
1 +INR
2 -INR
3 OUTR
4 GND
5 Mute
6 VSS
7 CN
14 +INL
13 -INL
12 OUTL
11 UVP
10 GND
9 VDD
8 CP
DRV632
N42
C617 1u/16V
C499 220p/50V
AR1O R553 0R
C622 220p/50V/NC
R725 82k/NC
C494 1u/25V
R546 10k
R549 6.8k
C486 47p/50V
R670 20k
R573 10k
R574 10k
AVDD3V3
L83 BLM18PG121SN1
C498 100n/16V
C616 22u/6.3V
C493 4.7u/10V
R550 0R SCART1R_PA
AV-OUT AUDIO

MB:5725

Hisense Electric Co.,LTD

Title AUDIO IN/OUT/COAXIAL OUT

Size	Document Number	Rev
A3	MT5652	1.0

Date: Tuesday, November 12, 2013 Sheet 9 of 17

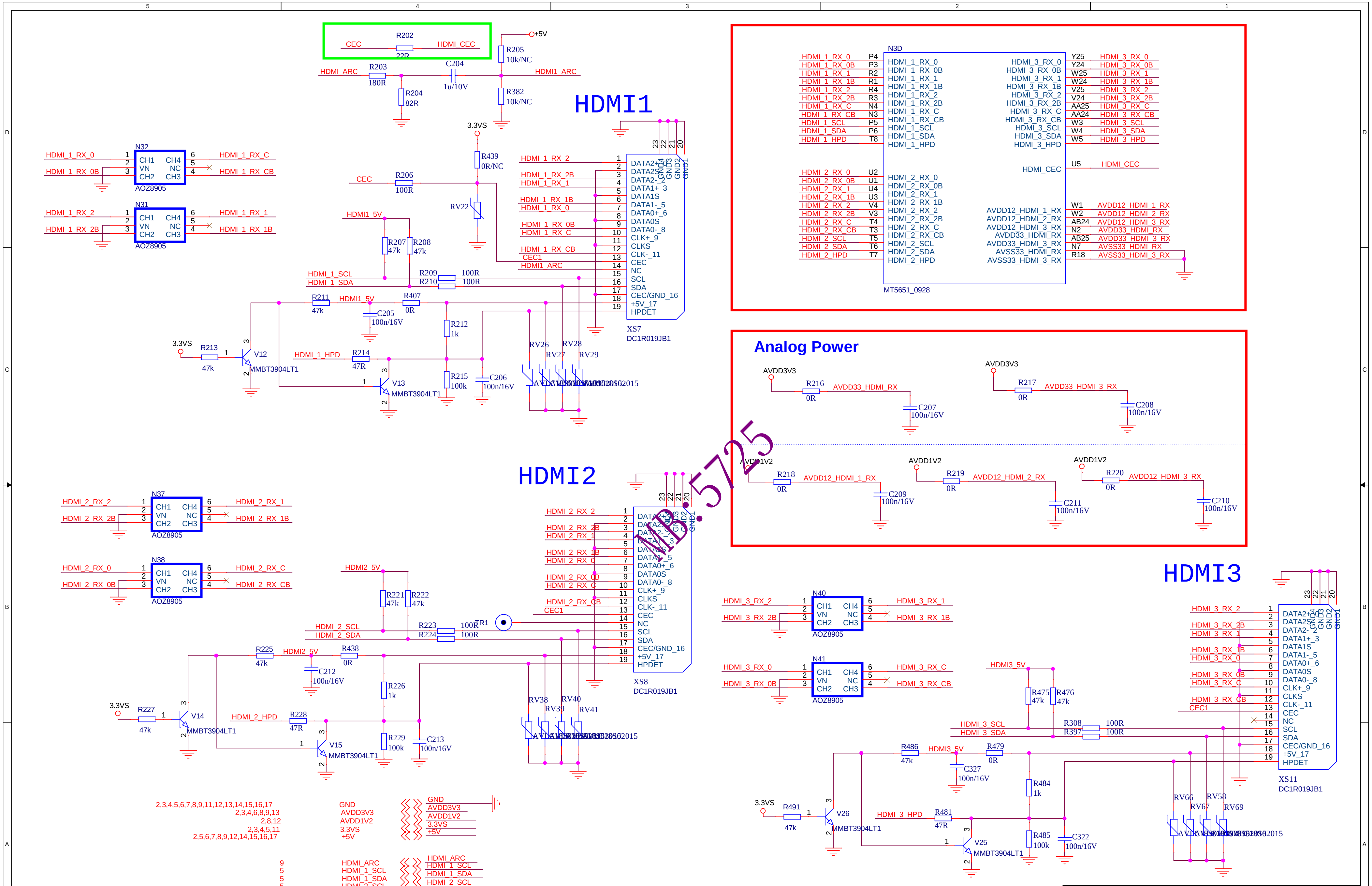
HDMI1
HDMI2
HDMI3
Analog Power
R202
CEC
HDMI_CEC
22R
+5V
R205
10k/NC
R203
HDMI_ARC
180R
C204
1u/10V
HDMI1_ARC
R204
82R
R382
10k/NC
3.3VS
R439
0R/NC
RV22
R206
100R
HDMI1_5V
R207
47k
R208
47k
HDMI_1_SCL
HDMI_1_SDA
R209
R210
100R
R211
47k
R407
0R
C205
100n/16V
R212
1k
R213
47k
V12
MMBT3904LT1
HDMI_1_HPD
R214
47R
V13
R215
100k
C206
100n/16V
RV26
RV27
RV28
RV29
XS7
DC1R019JB1
DATA2+_1
DATA2S
DATA2-_3
DATA1+_3
DATA1S
DATA1-_5
DATA0+_6
DATA0S
DATA0-_8
CLK+_9
CLKS
CLK-_11
CEC
NC
SCL
SDA
CEC/GND_16
+5V_17
HPDET
GND4
GND3
GND2
GND1
N32
N31
N37
N38
N40
N41
AOZ8905
CH1
CH2
CH3
CH4
VN
NC
HDMI_1_RX_0
HDMI_1_RX_0B
HDMI_1_RX_1
HDMI_1_RX_1B
HDMI_1_RX_2
HDMI_1_RX_2B
HDMI_1_RX_C
HDMI_1_RX_CB
CEC1
N3D
MT5651_0928
HDMI_1_HPD
HDMI_2_RX_0
HDMI_2_RX_0B
HDMI_2_RX_1
HDMI_2_RX_1B
HDMI_2_RX_2
HDMI_2_RX_2B
HDMI_2_RX_C
HDMI_2_RX_CB
HDMI_2_SCL
HDMI_2_SDA
HDMI_2_HPD
HDMI_3_RX_0
HDMI_3_RX_0B
HDMI_3_RX_1
HDMI_3_RX_1B
HDMI_3_RX_2
HDMI_3_RX_2B
HDMI_3_RX_C
HDMI_3_RX_CB
HDMI_3_SCL
HDMI_3_SDA
HDMI_3_HPD
HDMI_CEC
AVDD12_HDMI_1_RX
AVDD12_HDMI_2_RX
AVDD12_HDMI_3_RX
AVDD33_HDMI_RX
AVDD33_HDMI_3_RX
AVSS33_HDMI_RX
AVSS33_HDMI_3_RX
AVDD3V3
AVDD1V2
R216
R217
R218
R219
R220
0R
C207
C208
C209
C210
C211
100n/16V
HDMI2_5V
R221
R222
R223
R224
TR1
R225
R438
C212
R226
R227
V14
V15
R228
R229
C213
RV38
RV39
RV40
RV41
XS8
HDMI3_5V
R475
R476
R308
R397
R486
R479
C327
R484
R491
V26
V25
R481
R485
C322
RV66
RV67
RV58
RV69
XS11
2,3,4,5,6,7,8,9,11,12,13,14,15,16,17
2,3,4,6,8,9,13
2,8,12
2,3,4,5,11
2,5,6,7,8,9,12,14,15,16,17
GND
AVDD3V3
AVDD1V2
3.3VS
+5V
9
5
HDMI_ARC
HDMI_1_SCL
HDMI_1_SDA
HDMI_2_SCL
HDMI_2_SDA
HDMI_2_HPD

MB.5725

Hisense Electric Co.,LTD

Title
HDMI1/HDMI2/HDMI3

Size	Document Number	Rev
A3	MT5652	1.0

Date: Tuesday, November 12, 2013 Sheet 10 of 17

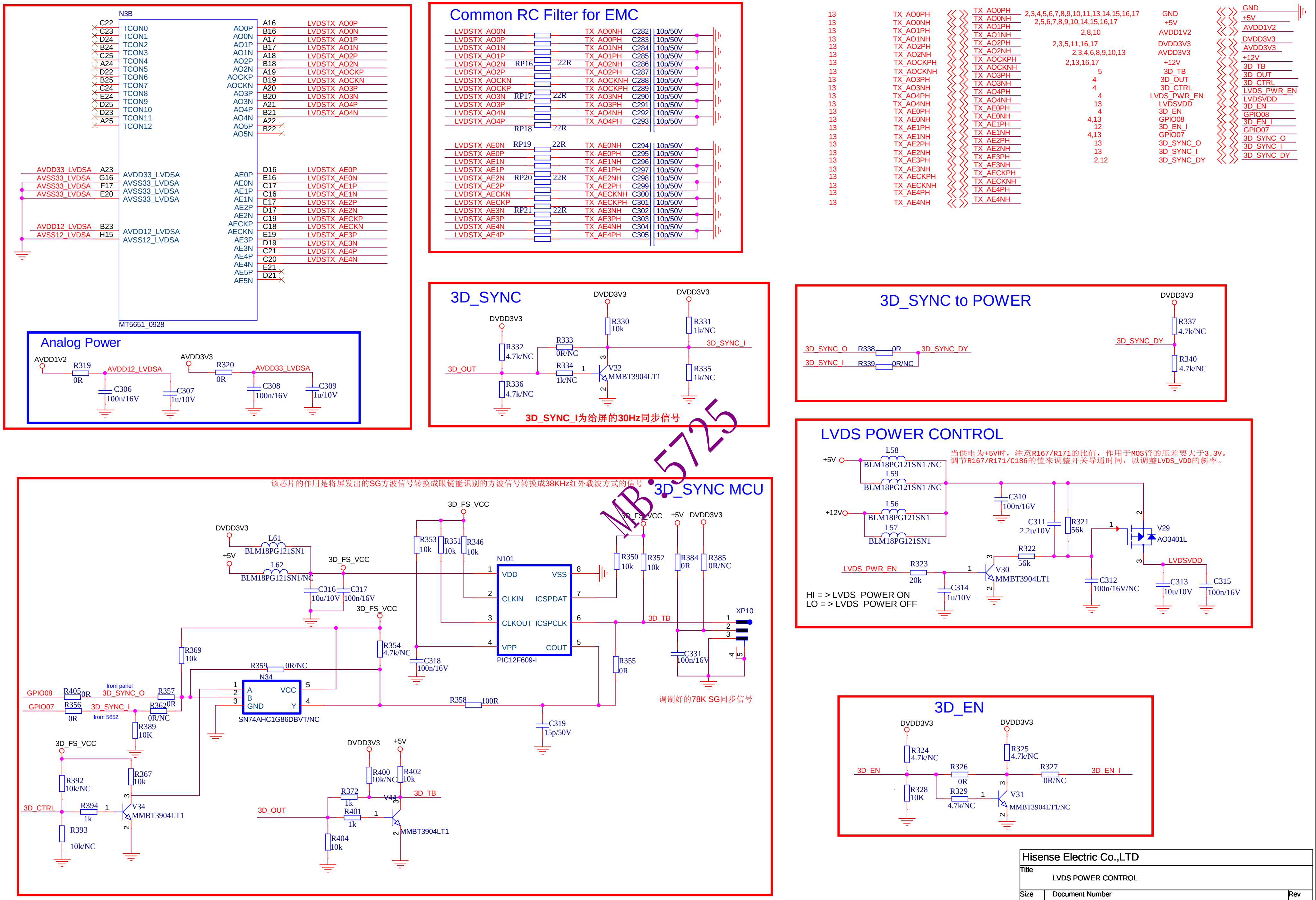
N3B
MT5651_0928
Common RC Filter for EMC
Analog Power
AVDD1V2
AVDD3V3
AVDD12_LVDSA
AVDD33_LVDSA
3D_SYNC
3D_SYNC to POWER
LVDS POWER CONTROL
3D_SYNC MCU
3D_EN
MB 5725
PIC12F609-I
SN74AHC1G86DBVT/NC
XP10
VDD
VSS
CLKIN
ICSPDAT
CLKOUT
ICSPCLK
VPP
COUT
V29
AO3401L
LVDSVDD
LVDS_PWR_EN
3D_SYNC_O
3D_SYNC_I
3D_SYNC_DY
3D_OUT
3D_TB
3D_CTRL
3D_EN
3D_EN_I
3D_FS_VCC
DVDD3V3
+5V
+12V
GPIO08
GPIO07
from panel
from 5652
MMBT3904LT1
HI = > LVDS POWER ON
LO = > LVDS POWER OFF

3D_SYNC_I为给屏的30Hz同步信号

当供电为+5V时，注意R167/R171的比值，作用于MOS管的压差要大于3.3V。
调节R167/R171/C186的值来调整开关导通时间，以调整LVDS_VDD的斜率。

该芯片的作用是将屏发出的SG方波信号转换成眼镜能识别的方波信号转换成38KHz红外载波方式的信号

调制好的78K SG同步信号

Hisense Electric Co.,LTD

Title
LVDS POWER CONTROL

Size	Document Number	Rev
A3	MT5652	1.0

Date: Tuesday, November 12, 2013 Sheet 11 of 17

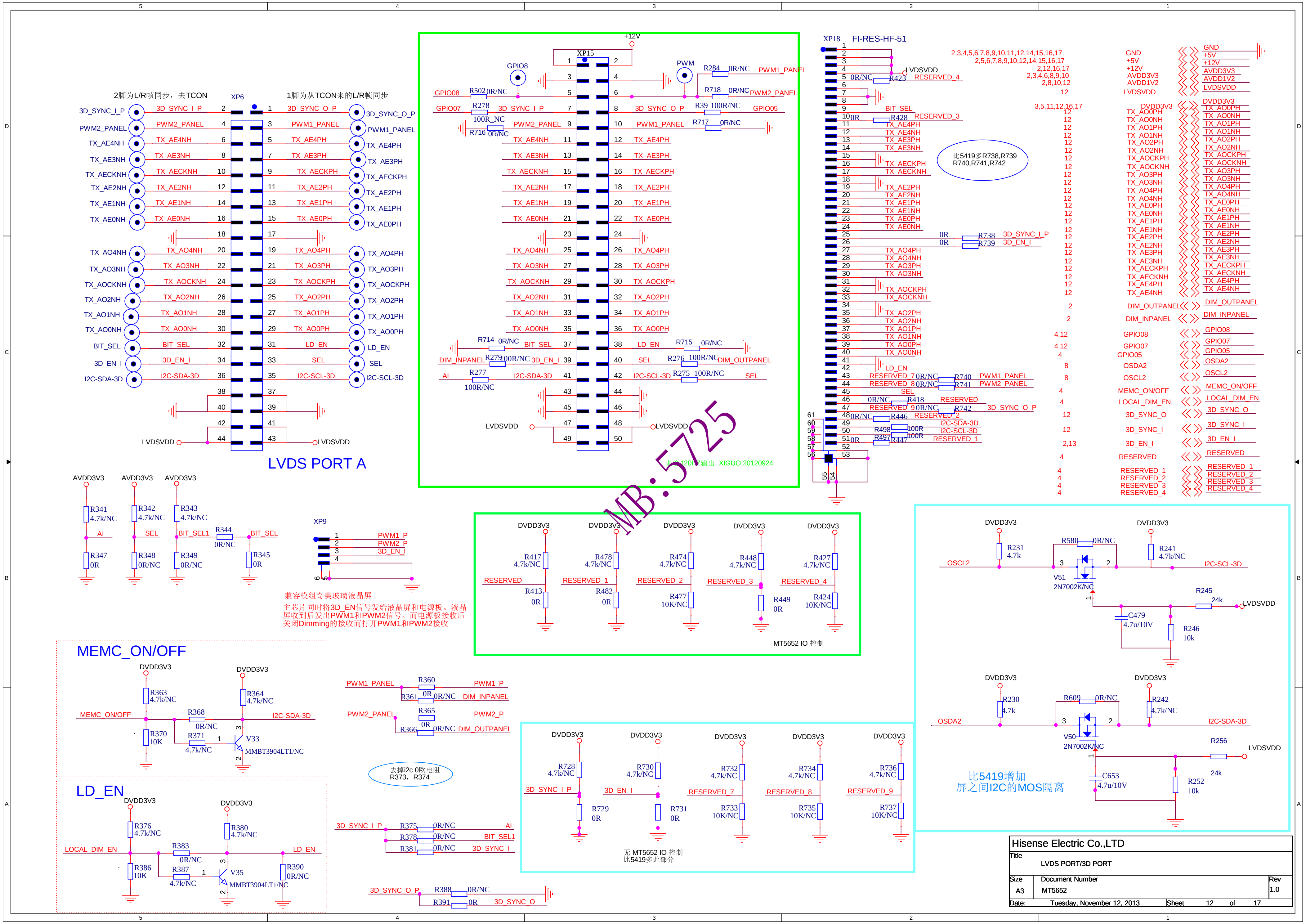
2脚为L/R帧同步，去TCON
1脚为从TCON来的L/R帧同步
XP6
3D_SYNC_I_P
PWM2_PANEL
TX_AE4NH
TX_AE3NH
TX_AECKNH
TX_AE2NH
TX_AE1NH
TX_AE0NH
TX_AO4NH
TX_AO3NH
TX_AOCKNH
TX_AO2NH
TX_AO1NH
TX_AO0NH
BIT_SEL
3D_EN_I
I2C-SDA-3D
3D_SYNC_O_P
PWM1_PANEL
TX_AE4PH
TX_AE3PH
TX_AECKPH
TX_AE2PH
TX_AE1PH
TX_AE0PH
TX_AO4PH
TX_AO3PH
TX_AOCKPH
TX_AO2PH
TX_AO1PH
TX_AO0PH
LD_EN
SEL
I2C-SCL-3D
LVDSVDD
LVDS PORT A
+12V
XP15
GPIO8
PWM
GPIO08
GPIO07
GPIO05
R502 0R/NC
R278 100R_NC
R716 0R/NC
R284 0R/NC
R718 0R/NC
R39 100R/NC
R717 0R/NC
R714 0R/NC
R715 0R/NC
R279 100R/NC
R276 100R/NC
R277 100R/NC
R275 100R/NC
DIM_INPANEL
DIM_OUTPANEL
AI
兼容120HZ输出 XIGUO 20120924
MB.5725
XP18 FI-RES-HF-51
2,3,4,5,6,7,8,9,10,11,12,14,15,16,17
2,5,6,7,8,9,10,11,12,14,15,16,17
2,12,16,17
2,3,4,6,8,9,10
2,8,10,12
3,5,11,12,16,17
GND
+5V
+12V
AVDD3V3
AVDD1V2
LVDSVDD
DVDD3V3
比5419多R738,R739
R740,R741,R742
R423 RESERVED_4
R428 RESERVED_3
R738 3D_SYNC_I_P
R739 3D_EN_I
R740 PWM1_PANEL
R741 PWM2_PANEL
R418 RESERVED
R742 3D_SYNC_O_P
R446 RESERVED_2
R498 100R I2C-SDA-3D
R497 100R I2C-SCL-3D
R447 RESERVED_1
DIM_OUTPANEL
DIM_INPANEL
GPIO08
GPIO07
GPIO05
OSDA2
OSCL2
MEMC_ON/OFF
LOCAL_DIM_EN
3D_SYNC_O
3D_SYNC_I
3D_EN_I
RESERVED
RESERVED_1
RESERVED_2
RESERVED_3
RESERVED_4
AVDD3V3
R341 4.7k/NC
R342 4.7k/NC
R343 4.7k/NC
R344 0R/NC
R345 0R
R347 0R
R348 0R/NC
R349 0R/NC
BIT_SEL1
XP9
PWM1_P
PWM2_P
3D_EN_I
兼容模组奇美玻璃液晶屏
主芯片同时将3D_EN信号发给液晶屏和电源板。液晶屏收到后发出PWM1和PWM2信号。而电源板接收后关闭Dimming的接收而打开PWM1和PWM2接收
DVDD3V3
R417 4.7k/NC
R413 0R
R478 4.7k/NC
R482 0R
R474 4.7k/NC
R477 10K/NC
R448 4.7k/NC
R449 0R
R427 4.7k/NC
R424 10K/NC
MT5652 IO 控制
R231 4.7k
R580 0R/NC
V51 2N7002K/NC
R241 4.7k/NC
R245 24k
C479 4.7u/10V
R246 10k
R230 4.7k
R609 0R/NC
V50 2N7002K/NC
R242 4.7k/NC
R256 24k
C653 4.7u/10V
R252 10k
比5419增加
屏之间I2C的MOS隔离
MEMC_ON/OFF
R363 4.7k/NC
R364 4.7k/NC
R368 0R/NC
R370 10K
R371 4.7k/NC
V33 MMBT3904LT1/NC
PWM1_PANEL
R360
R361 0R 0R/NC
R365
R366 0R 0R/NC
DIM_INPANEL
DIM_OUTPANEL
去掉i2c 0欧电阻
R373，R374
LD_EN
LOCAL_DIM_EN
R376 4.7k/NC
R380 4.7k/NC
R383 0R/NC
R386 10K
R387 4.7k/NC
V35 MMBT3904LT1/NC
R390 0R/NC
3D_SYNC_I_P
R375 0R/NC
R378 0R/NC
R381 0R/NC
BIT_SEL1
3D_SYNC_I
3D_SYNC_O_P
R388 0R/NC
R391 0R
3D_SYNC_O
R728 4.7k/NC
R729 0R
R730 4.7k/NC
R731 0R
R732 4.7k/NC
R733 10K/NC
R734 4.7k/NC
R735 10K/NC
R736 4.7k/NC
R737 10K/NC
RESERVED_7
RESERVED_8
RESERVED_9
无 MT5652 IO 控制
比5419多此部分

Hisense Electric Co.,LTD

Title
LVDS PORT/3D PORT

Size	Document Number	Rev
A3	MT5652	1.0

Date: Tuesday, November 12, 2013 Sheet 12 of 17

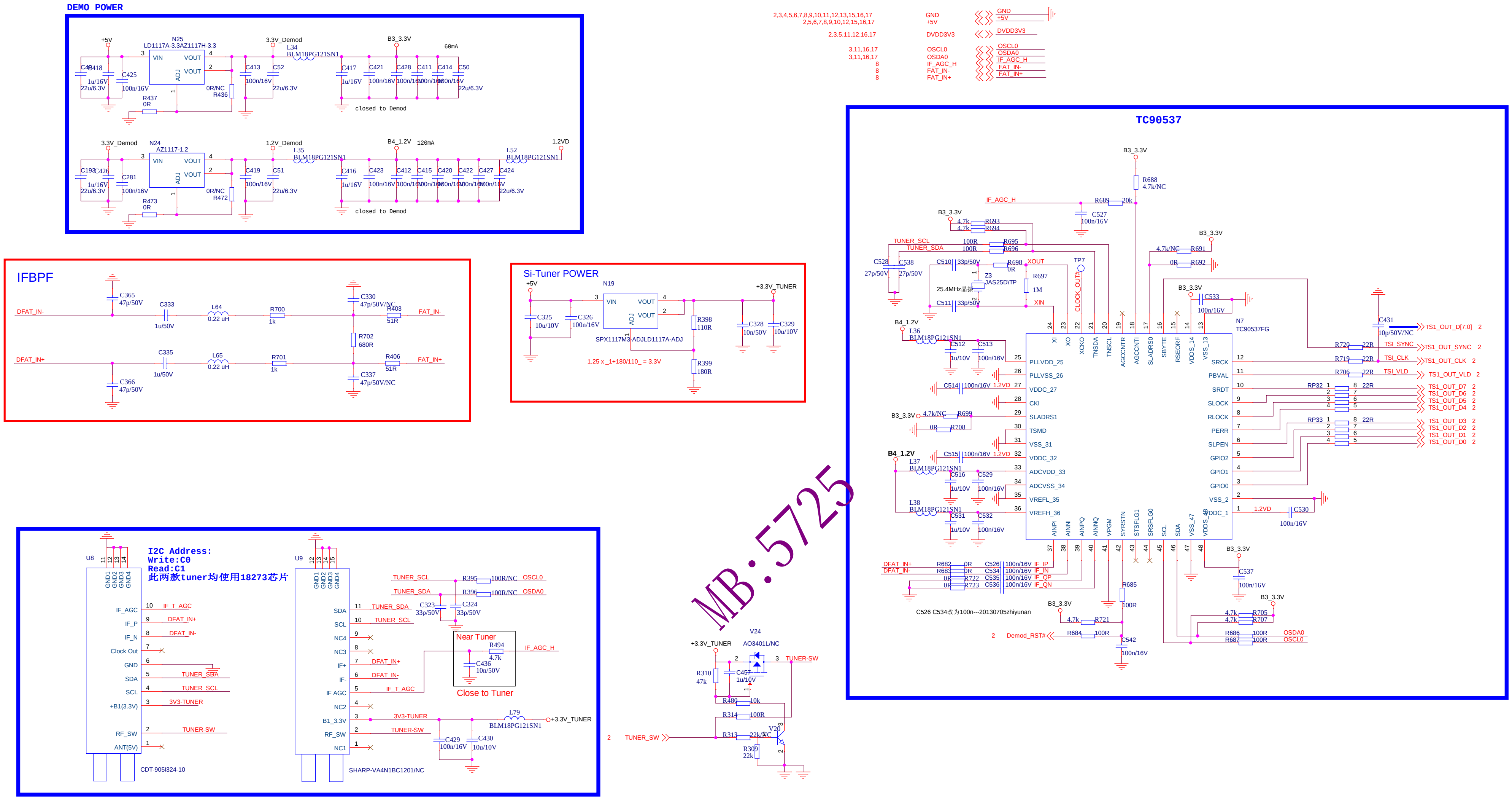
DEMO POWER
N25
LD1117A-3.3AZ1117H-3.3
+5V
3.3V_Demod
L34
BLM18PG121SN1
B3_3.3V
60mA
VIN
VOUT
ADJ
C418
C425
C413
C52
C417
C421
C428
C411
C414
C50
1u/16V
22u/6.3V
100n/16V
R437
0R
0R/NC
R436
closed to Demod
N24
AZ1117-1.2
1.2V_Demod
L35
B4_1.2V
120mA
1.2VD
L52
C193
C426
C281
C419
C51
C416
C423
C412
C415
C420
C422
C427
C424
R473
R472
IFBPF
DFAT_IN-
DFAT_IN+
C365
47p/50V
C333
1u/50V
L64
0.22 uH
R700
1k
C330
47p/50V/NC
R403
51R
FAT_IN-
R702
680R
C335
L65
R701
R406
FAT_IN+
C366
C337
47p/50V/NC
Si-Tuner POWER
+5V
N19
+3.3V_TUNER
C325
10u/10V
C326
100n/16V
SPX1117M3-ADJLD1117A-ADJ
R398
110R
R399
180R
C328
10n/50V
C329
10u/10V
1.25 x _1+180/110_ = 3.3V
I2C Address:
Write:C0
Read:C1
此两款tuner均使用18273芯片
U8
GND1 GND2 GND3 GND4
IF_AGC
IF_P
IF_N
Clock Out
GND
SDA
SCL
+B1(3.3V)
RF_SW
ANT(5V)
IF_T_AGC
TUNER_SDA
TUNER_SCL
3V3-TUNER
TUNER-SW
CDT-9051324-10
U9
SDA
SCL
NC4
NC3
IF+
IF-
IF AGC
NC2
B1_3.3V
RF_SW
NC1
SHARP-VA4N1BC1201/NC
R395
100R/NC
OSCL0
R396
OSDA0
C323
33p/50V
C324
Near Tuner
R494
4.7k
IF_AGC_H
C436
10n/50V
Close to Tuner
L79
BLM18PG121SN1
C429
100n/16V
C430
10u/10V
V24
AO3401L/NC
R310
47k
C457
1u/10V
R480
10k
R314
100R
R313
22k/NC
V20
R309
22k
TUNER_SW
2,3,4,5,6,7,8,9,10,11,12,13,15,16,17
2,5,6,7,8,9,10,12,15,16,17
GND
+5V
2,3,5,11,12,16,17
DVDD3V3
3,11,16,17
OSCL0
OSDA0
8
IF_AGC_H
FAT_IN-
FAT_IN+
TC90537
B3_3.3V
R688
4.7k/NC
R689
20k
C527
100n/16V
N7
TC90537FG
XI
XO
XCKO
TNSDA
TNSCL
AGCCNTR
AGCCNTI
SLADRS0
SBYTE
RSEORF
VDDS_14
VSS_13
PLLVDD_25
PLLVSS_26
VDDC_27
CKI
SLADRS1
TSMD
VSS_31
VDDC_32
ADCVDD_33
ADCVSS_34
VREFL_35
VREFH_36
SRCK
PBVAL
SRDT
SLOCK
RLOCK
PERR
SLPEN
GPIO2
GPIO1
GPIO0
VSS_2
VDDC_1
AINPI
AINNI
AINPQ
AINNQ
VPGM
SYRSTN
STSFLG1
STSFLG0
SCL
SDA
VSS_47
VDDS_48
C528
C538
27p/50V
C510
33p/50V
C511
Z3
JAS25D\TP
25.4MHz晶振
R698
XOUT
XIN
TP7
CLOCK_OUT
R697
1M
R693
R694
R695
R696
TUNER_SCL
TUNER_SDA
L36
L37
L38
C512
C513
C514
C515
C516
C529
C531
C532
R699
4.7k/NC
R708
B4_1.2V
R691
R692
C533
C431
10p/50V/NC
TS1_OUT_D[7:0]
R720
TS1_OUT_SYNC
R719
TS1_OUT_CLK
R706
TS1_OUT_VLD
TSI_SYNC
TSI_CLK
TSI_VLD
RP32
RP33
22R
TS1_OUT_D7
TS1_OUT_D6
TS1_OUT_D5
TS1_OUT_D4
TS1_OUT_D3
TS1_OUT_D2
TS1_OUT_D1
TS1_OUT_D0
C530
1.2VD
R682
R683
R722
R723
C526
C534
C535
C536
IF_IP
IF_IN
IF_QP
IF_QN
C526 C534改为100n---20130705zhiyunan
R685
100R
R721
R684
Demod_RST#
C542
C537
R705
R707
R686
R687

Hisense Electric Co.,LTD

Title
SILICON TUNER

Size A2
Document Number MT5652
Rev 1.0

Date: Tuesday, November 12, 2013
Sheet 13 of 17

MB:5725

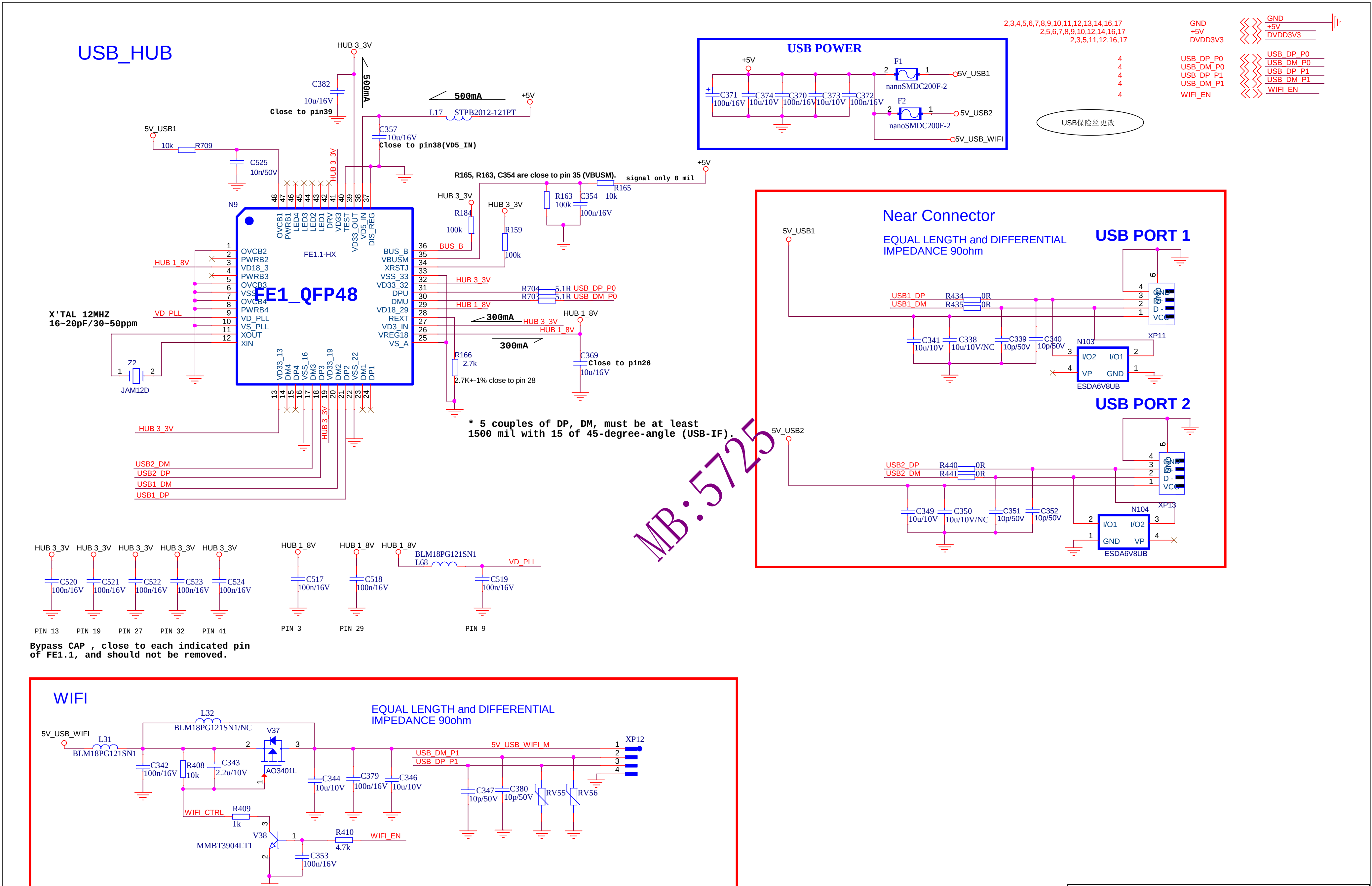
USB_HUB
USB POWER
Near Connector
EQUAL LENGTH and DIFFERENTIAL IMPEDANCE 90ohm
USB PORT 1
USB PORT 2
WIFI
FE1_QFP48
FE1.1-HX
N9
X'TAL 12MHZ
16~20pF/30~50ppm
Z2
JAM12D
HUB 3_3V
HUB 1_8V
VD_PLL
5V_USB1
5V_USB2
5V_USB_WIFI
+5V
GND
500mA
300mA
L17 STPB2012-121PT
C382 10u/16V
Close to pin39
C357 10u/16V
Close to pin38(VD5_IN)
C525 10n/50V
R709 10k
R165, R163, C354 are close to pin 35 (VBUSM).
signal only 8 mil
R184 100k
R159 100k
R163 100k
C354 100n/16V
R165 10k
BUS_B
R704 5.1R USB_DP_P0
R703 5.1R USB_DM_P0
R166 2.7k
2.7K+-1% close to pin 28
C369 10u/16V
Close to pin26
OVCB2
PWRB2
VD18_3
PWRB3
OVCB3
VSS
OVCB4
PWRB4
VD_PLL
VS_PLL
XOUT
XIN
OVCB1
PWRB1
LED4
LED3
LED2
LED1
DRV
VD33
TEST
VD33_OUT
VD5_IN
DIS_REG
BUS_B
VBUSM
XRSTJ
VSS_33
VD33_32
DPU
DMU
VD18_29
REXT
VD3_IN
VREG18
VS_A
VD33_13
DM4
DP4
VSS_16
DM3
DP3
VD33_19
DM2
DP2
VSS_22
DM1
DP1
USB2_DM
USB2_DP
USB1_DM
USB1_DP
F1 nanoSMDC200F-2
F2 nanoSMDC200F-2
C371 100u/16V
C374 10u/10V
C370 100n/16V
C373 10u/10V
C372 100n/16V
USB保险丝更改
2,3,4,5,6,7,8,9,10,11,12,13,14,16,17
2,5,6,7,8,9,10,12,14,16,17
2,3,5,11,12,16,17
DVDD3V3
USB_DP_P0
USB_DM_P0
USB_DP_P1
USB_DM_P1
WIFI_EN
R434 0R
R435 0R
C341 10u/10V
C338 10u/10V/NC
C339 10p/50V
C340 10p/50V
N103
ESDA6V8UB
I/O1
I/O2
VP
XP11
GND
D+
D-
VCC
R440 0R
R441 0R
C349 10u/10V
C350 10u/10V/NC
C351 10p/50V
C352 10p/50V
N104
XP13
C520 100n/16V
C521 100n/16V
C522 100n/16V
C523 100n/16V
C524 100n/16V
C517 100n/16V
C518 100n/16V
C519 100n/16V
L68 BLM18PG121SN1
PIN 13
PIN 19
PIN 27
PIN 32
PIN 41
PIN 3
PIN 29
PIN 9
L31 BLM18PG121SN1
L32 BLM18PG121SN1/NC
V37 AO3401L
C342 100n/16V
R408 10k
C343 2.2u/10V
C344 10u/10V
C379 100n/16V
C346 10u/10V
5V_USB_WIFI_M
USB_DM_P1
USB_DP_P1
XP12
C347 10p/50V
C380 10p/50V
RV55
RV56
WIFI_CTRL
R409 1k
V38 MMBT3904LT1
R410 4.7k
WIFI_EN
C353 100n/16V
A

* 5 couples of DP, DM, must be at least
1500 mil with 15 of 45-degree-angle (USB-IF).

Bypass CAP , close to each indicated pin
of FE1.1, and should not be removed.

MB:5725

Hisense Electric Co.,LTD

Title	USB		
Size A3	Document Number MT5652		Rev 1.0
Date: Tuesday, November 12, 2013	Sheet 14 of 17		

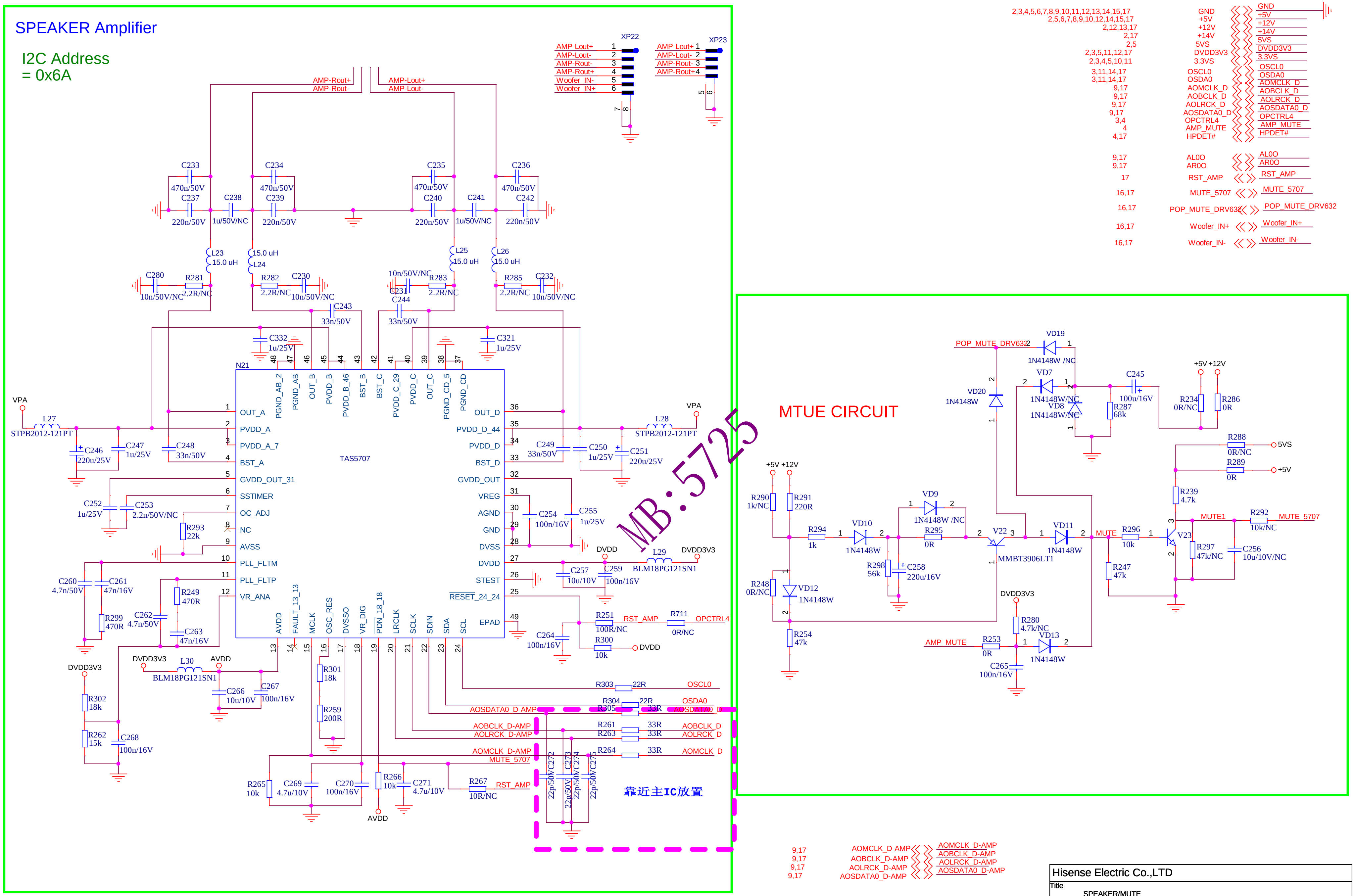
SPEAKER Amplifier
I2C Address
= 0x6A
MTUE CIRCUIT
MB:5725
N21
TAS5707
XP22
XP23
靠近主IC放置
OUT_A
PVDD_A
PVDD_A_7
BST_A
GVDD_OUT_31
SSTIMER
OC_ADJ
NC
AVSS
PLL_FLTM
PLL_FLTP
VR_ANA
OUT_D
PVDD_D_44
PVDD_D
BST_D
GVDD_OUT
VREG
AGND
GND
DVSS
DVDD
STEST
RESET_24_24
EPAD
AVDD
FAULT_13_13
MCLK
OSC_RES
DVSSO
VR_DIG
PDN_18_18
LRCLK
SCLK
SDIN
SDA
SCL
PGND_AB_2
PGND_AB
OUT_B
PVDD_B
PVDD_B_46
BST_B
BST_C
PVDD_C_29
PVDD_C
OUT_C
PGND_CD_5
PGND_CD
AMP-Lout+
AMP-Lout-
AMP-Rout-
AMP-Rout+
Woofer_IN-
Woofer_IN+
VPA
DVDD
DVDD3V3
AVDD
L27 STPB2012-121PT
L28 STPB2012-121PT
L29 BLM18PG121SN1
L30 BLM18PG121SN1
L23 15.0 uH
L24 15.0 uH
L25 15.0 uH
L26 15.0 uH
POP_MUTE_DRV632
AMP_MUTE
MUTE_5707
MUTE1
RST_AMP
OPCTRL4
OSCL0
OSDA0
AOSDATA0_D-AMP
AOBCLK_D-AMP
AOLRCK_D-AMP
AOMCLK_D-AMP
AOSDATA0_D
AOBCLK_D
AOLRCK_D
AOMCLK_D
GND
+5V
+12V
+14V
5VS
DVDD3V3
3.3VS
AL0O
AR0O
Woofer_IN+
Woofer_IN-
VD7 VD8 VD9 VD10 VD11 VD12 VD13 VD19 VD20 1N4148W
V22 MMBT3906LT1
V23

Hisense Electric Co.,LTD

Title SPEAKER/MUTE

Size A3 Document Number MT5652 Rev 1.0

Date: Tuesday, November 12, 2013 Sheet 15 of 17

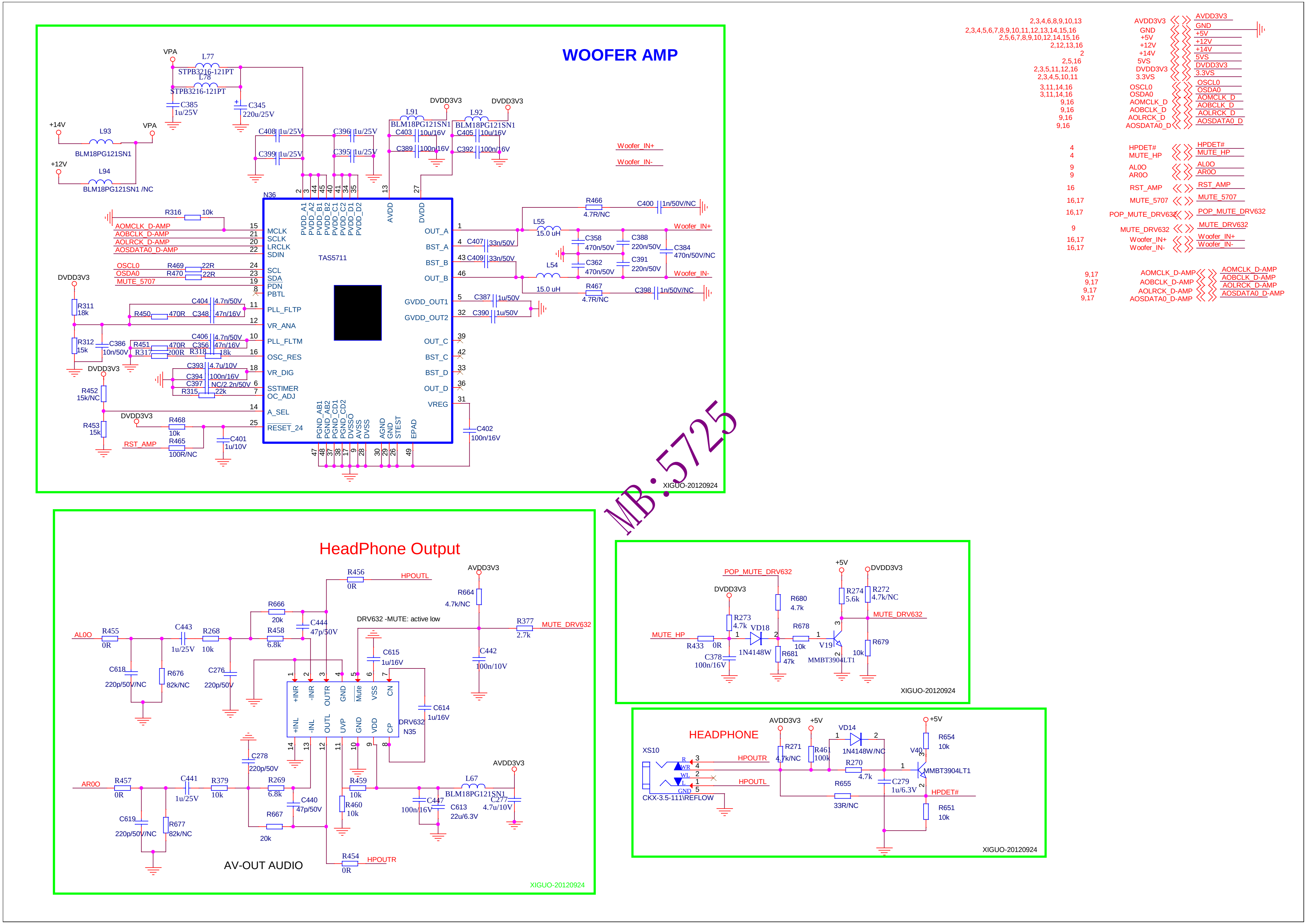

WOOFER AMP
TAS5711
N36
VPA
+14V
+12V
DVDD3V3
L77 STPB3216-121PT
L78 STPB3216-121PT
L93 BLM18PG121SN1
L94 BLM18PG121SN1 /NC
L91 BLM18PG121SN1
L92 BLM18PG121SN1
L55 15.0 uH
L54 15.0 uH
C385 1u/25V
C345 220u/25V
C408 1u/25V
C399 1u/25V
C396 1u/25V
C395 1u/25V
C403 10u/16V
C389 100n/16V
C405 10u/16V
C392 100n/16V
R466 4.7R/NC
C400 1n/50V/NC
R467 4.7R/NC
C398 1n/50V/NC
C407 33n/50V
C409 33n/50V
C358 470n/50V
C362 470n/50V
C388 220n/50V
C391 220n/50V
C384 470n/50V/NC
C387 1u/50V
C390 1u/50V
C402 100n/16V
R316 10k
R311 18k
R312 15k
C386 10n/50V
R450 470R
C348 47n/16V
C404 4.7n/50V
R451 470R
C356 47n/16V
C406 4.7n/50V
R317 200R
R318 18k
C393 4.7u/10V
C394 100n/16V
C397 NC/2.2n/50V
R315 22k
R469 22R
R470 22R
R452 15k/NC
R453 15k
R468 10k
R465 100R/NC
C401 1u/10V
AOMCLK_D-AMP
AOBCLK_D-AMP
AOLRCK_D-AMP
AOSDATA0_D-AMP
OSCL0
OSDA0
MUTE_5707
RST_AMP
Woofer_IN+
Woofer_IN-
MCLK
SCLK
LRCLK
SDIN
SCL
SDA
PDN
PBTL
PLL_FLTP
VR_ANA
PLL_FLTM
OSC_RES
VR_DIG
SSTIMER
OC_ADJ
A_SEL
RESET_24
PVDD_A1
PVDD_A2
PVDD_B1
PVDD_B2
PVDD_C1
PVDD_C2
PVDD_D1
PVDD_D2
AVDD
DVDD
OUT_A
BST_A
BST_B
OUT_B
GVDD_OUT1
GVDD_OUT2
OUT_C
BST_C
BST_D
OUT_D
VREG
PGND_AB1
PGND_AB2
PGND_CD1
PGND_CD2
DVSSO
AVSS
DVSS
AGND
GND
STEST
EPAD
XIGUO-20120924
AVDD3V3
GND
+5V
+12V
+14V
5VS
DVDD3V3
3.3VS
OSCL0
OSDA0
AOMCLK_D
AOBCLK_D
AOLRCK_D
AOSDATA0_D
HPDET#
MUTE_HP
AL0O
AR0O
RST_AMP
MUTE_5707
POP_MUTE_DRV632
MUTE_DRV632
Woofer_IN+
Woofer_IN-
AOMCLK_D-AMP
AOBCLK_D-AMP
AOLRCK_D-AMP
AOSDATA0_D-AMP
2,3,4,6,8,9,10,13
2,3,4,5,6,7,8,9,10,11,12,13,14,15,16
2,5,6,7,8,9,10,12,14,15,16
2,12,13,16
2
2,5,16
2,3,5,11,12,16
2,3,4,5,10,11
3,11,14,16
3,11,14,16
9,16
9,16
9,16
9,16
4
4
9
9
16
16,17
16,17
9
16,17
16,17
9,17
9,17
9,17
9,17
HeadPhone Output
AV-OUT AUDIO
DRV632 -MUTE: active low
DRV632
N35
+INR
-INR
OUTR
GND
Mute
VSS
CN
+INL
-INL
OUTL
UVP
GND
VDD
CP
AL0O
AR0O
R455 0R
C443 1u/25V
R268 10k
C618 220p/50V/NC
R676 82k/NC
C276 220p/50V
R666 20k
R458 6.8k
C444 47p/50V
R456 0R
HPOUTL
R664 4.7k/NC
R377 2.7k
MUTE_DRV632
C442 100n/10V
C615 1u/16V
C614 1u/16V
R457 0R
C441 1u/25V
R379 10k
C619 220p/50V/NC
R677 82k/NC
C278 220p/50V
R269 6.8k
C440 47p/50V
R667 20k
R459 10k
R460 10k
C447 100n/16V
C613 22u/6.3V
L67 BLM18PG121SN1
C277 4.7u/10V
R454 0R
HPOUTR
XIGUO-20120924
POP_MUTE_DRV632
MUTE_HP
R433 0R
C378 100n/16V
R273 4.7k
VD18 1N4148W
R680 4.7k
R681 47k
R678 10k
V19 MMBT3904LT1
R274 5.6k
R272 4.7k/NC
MUTE_DRV632
R679 10k
XIGUO-20120924
HEADPHONE
XS10
CKX-3.5-111\REFLOW
R
WR
WL
L
GND
HPOUTR
HPOUTL
R271 4.7k/NC
R461 100k
VD14 1N4148W/NC
R270 4.7k
R655 33R/NC
C279 1u/6.3V
V40 MMBT3904LT1
R654 10k
R651 10k
HPDET#
XIGUO-20120924

MB:5725

Power board:4903

XP801
XP-02
F801
T6.3A/250VAC
RV801
10D561
C801
474/AC250V
RT801
NTC5D-15
M846
M802
M823
M832
M819
M815
M821
M820
M834
M837
M836
L802A
L802A1
LCL-2420H
C803
474/AC275V
R801 270k
R802 270k
R803 270k
RT802
NTC5D-13
C805
471/AC250V
C804
471/AC250V
L806 100uH
L807 100uH
VB801
10A/600V
C806
102/2KV
C807
102/2KV
C808
474/AC275V
M838
M840
300v
300V
VD902 FR107
VD901 FR107
AC
R901 1K
R902 1K
R903 1K
VDD
R879
BCP56-10T1G
V902
+20V
C913
C902 102
VZ901 16V
C901
W834
PFC
M803
T901
EE2832
M806
VD921
MUR10150
C911 102/1KV
R917 100K/2W
VD903 FR107
M801
R921
R920 1M
C920 471/1KV
L921 3.9uH
12V1
12V
L950 100uH
C921 1000u/25V
C922 1000u/25V
M810
R915 10R
VD905 FR107
R805 270K
R806 270K
R807 270K
R800 680R
R983 51K
R984 51K
R811 1M
VZ807 4V7
C810 104
C811 472
R812 1M
R813 1M
VD810 1N4148
V809 2907
C820 225/50V
VCC
R828 22R
VD811 1N5408
C809 102/2KV
L812 100uH
MUR460 VD812A
L811
M841
L804 FB
R809 15K
R816 15K
NCP1608
N842
Vcc DRV
CTRL CS
Ct FB
GND
Zcd
R819 22R
R818 22R
VD815 0520
V813 2907
R810 22R
VZ811 18V
V810 10N60
R817 512
R819A 22R/NA
R818A 22R/NA
VD815A 0520/NA
V813A 2907/NA
R810A 22R/NA
VZ811A 18V/NA
V811 10N60/NA
R817A 512/NA
C825 1n/2KV
R822 1K
R823 1M/FR
R824 1M/FR
R825 1M/FR
C822 68u/450V
C824 68u/450V
R979 51K
R972 51K
R881 0
R895 0
R826 20K/FR
R830 680K
C819 474/50V
R814 20K
C821 222/50V
C814 47u/50V
VZ812 18V
C816 104/50V
C815 15p/nc
VD813 0520/nc
R829 24k
R827 24K
C817 101/50V
R808 1K
C818 102
R820 0.22/2W
R821 0.22/2W
R906 1K
N851
NCP1271D65R2G
FB HV DRV
Skip/Latch Vcc
NC GND CS
R963 1K
R964 1K
VD906 4148
R908 27R
R909 47R
V871
FQPF3N80C
R911 10K
R910 2K
C916 56/1KV
C903 102
R907 10K
C904 102
C905 331
C906 104
C907 22uF/50V
R912 0R51/3W
C908 47u/50V
R913 51K
R922 1K
R993 51K
R924 4K7
R932 2K4
R926 2K4
C926 nc
C927 103
R925 6K2
N891 HS817
N881 TL431
R992 51K
R928 22K6
R927 2K4
PB:4903
BCP56-10T1G
V903
W835
R919 2K
N893
PC817B
R931 1K
R929 4K7
R930 4K7
STB
C852 47uF/25V
R981 51K
C909 474
C910 474/CJ
V921 MMBT2222ALT1G
C928 104/50V
MMSZ18T1G VZ903
C853 10uF/25V
C850 2200P/400V
C851 1000P/400V
XP802 XP-14
24V
XP805 XP-10
BRI
BLSW
R880
R871 0R
R872 0R
R873 0R
R874 0R
R875 0R
R876 0R
16V
C855 474/NC
C856 474/50V
N871
NCP1396
CSS Vboot
Fmax Mupper
Ctimer HB
RT
BO Vcc
FB Mlower
DT GND
FF SF
C832 105
R831 1M
R832 1M
R833 1M
R834 8k2
C831 474/50V
R835 4K7
R836 2M2
C833 105
R837 15K
R838 15k
R839 3K9
C834 102/50V
R841 2K
C835 102/50V
R840 39K
R842 22R
VD831 MUR160
C836 104/50V
VD836 1N4148
R856 22R
R857 68R
V865 10N60
R858 5K1
M835
VD837 1N4148
R859 22R
R860 68R
V866 10N60
R861 5K1
C838 47uF/25V
R843 27R
C837 104/50V
VZ831 BZT52C18
R847 5k1
R846 10k
VD832 1N4148
R844 2K
R845 10K
V833 2907
R848 1K
VZ832 3V3
N883 TL431
C839 47n/CJ
R851 100K
R850 100K
VD834 1N4148
VD835 1N4148
C840 104/50V
R852 2K
R853 2K
C841 56P/1KV
C842 103/630V
M833
T831
VD839 MBRF20H100
C843 1000u/35V
C844 1000u/35V
C845 1000u/35V
24V/4A
R862 2K2/2W
VD838 MBRF20H100
M828
VD840
C846 1000u/25V
C848 1000u/25V
16V/1.5A
C847 104/50V
R885 22R
M814
VZ833 3V3
R894 1K
R854 1k
N892 PC817B
R893 0
R863 1K
R864 1K0
R867 1K
C849 474/CJ
R865 18K
N882 TL431
R892 0
R868 20K/FR
R869 1K/FR

Title

Size A3 | Number | Revision

Date: 2012-2-27 | Sheet of

File: E:\ ...\LED42K560X3D_DY_4903_D.SCHDOC | Drawn By:

RSAG2. 025. 4282

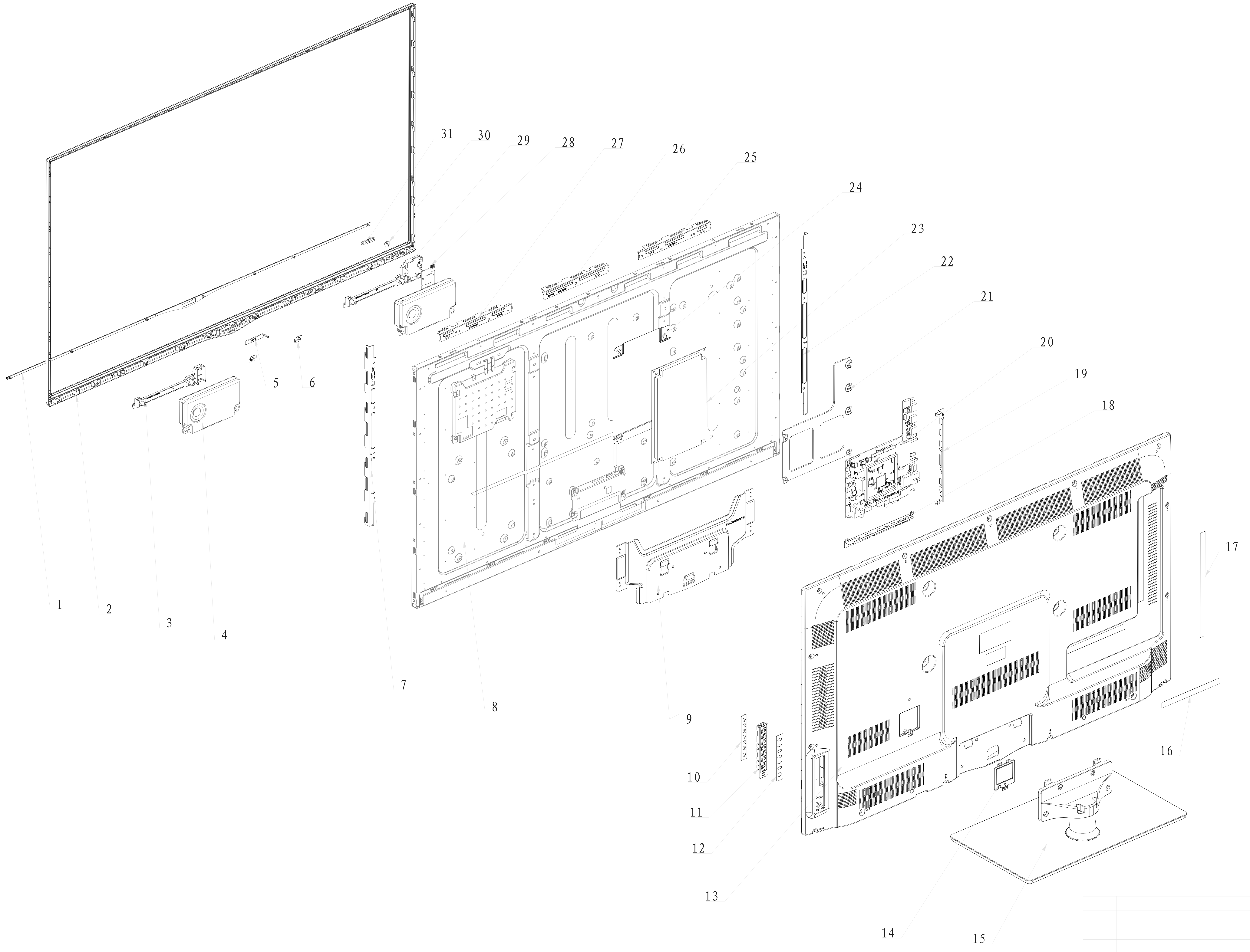

No.	Description	Qty.	Code No.	Remark
43				
42				
41				
40				
39				
38				
37				
36				
35				
34				
33				
32				
31	IR Board	1	RSAG2. 908. 5654\ROH	IR & key board are complex.
30	Bracket Unit	1	RSAG8. 078. 3321\HB\ROH\X0	
29	Bracket Unit	1	RSAG8. 078. 3238A\V0\ROH\X0	
28	3D RF Board	1	RSAG2. 908. 4652\ROH	
27	Bracket Unit	1	RSAG8. 038. 3682\T-L\ROH	
26	Bracket Unit	1	RSAG8. 038. 3683\T-M\ROH	
25	Bracket Unit	1	RSAG8. 038. 3684\T-R\ROH	
24	Insulating Spacer	1	RSAG8. 600. 0535\ROH	
23	Power Board	1	RSAG2. 908. 4903-11\ROH	
22	Bracket Unit	1	RSAG8. 038. 3681\R\ROH	
21	Bracket Unit	1	RSAG8. 078. 3292\V0\ROH\X0	
20	Main Board	1	RSAG2. 908. 5725-02\ROH	
19	Side Label	1	RSAG8. 041. 1271\B2\ROH\X0	
18	Bottom Label	1	RSAG8. 041. 1272\B2\ROH\X0	
17	Terminal Bracket	1	RSAG8. 804. 5085\ROH	
16	Terminal Bracket	1	RSAG8. 804. 5086\ROH	
15	Stand	1	RSAG6. 121. 0338\FB2+W8\X0\	
14	Power Cord Cover	1	RSAG8. 634. 0221\B2\V0\ROH	
13	Rear Enclosure	1	RSAG8. 074. 1656\MB2\V0\ROH\X0	
12	Terminal Bracket	1	RSAG8. 804. 4763\ROH	
11	Bracket Unit	1	RSAG8. 335. 0212\MB2\HB\ROH\X1	
10	Keypad PCA	1	RSAG2. 908. 5654\ROH	IR & key board are complex.
9	Bracket Unit	1	RSAG8. 038. 3641\ROH	
8	Pannel	1	CMI*V500HK1-LS6(E4)\JK\ROH	
7	Bracket Unit	1	RSAG8. 038. 3680\L\ROH	
6	Bracket Unit	1	RSAG8. 038. 2711\ROH	
5	Back Light	1	GHW5309-700\ROH	
4	Speaker	2	VIT90170-10W8Ω-01\ROH	
3	Bracket Unit(L)	1	RSAG8. 078. 3455A\ROH\X0	
2	Front Enclosure	1	RSAG8. 074. 1655\W6+GB2\V0\ROH\X0	
1	Decoration	1	RSAG8. 647. 0664-B\Silver\HB\ROH\X0	

EXPLONE

LTDN50K610NXWAM3D

RSAG2. 025. 4282