Version	Date	Author	Description
1.0	20070109	TennoLin	Initial release for Hisense PVR module

Realtek			Engineer: Tenno Lin
Title	Note		
Size Custom	Project Name **RTD1261-Hisense**		Rev 0.2
Date: Thursday, January 24, 2008		Sheet 1 of 11	

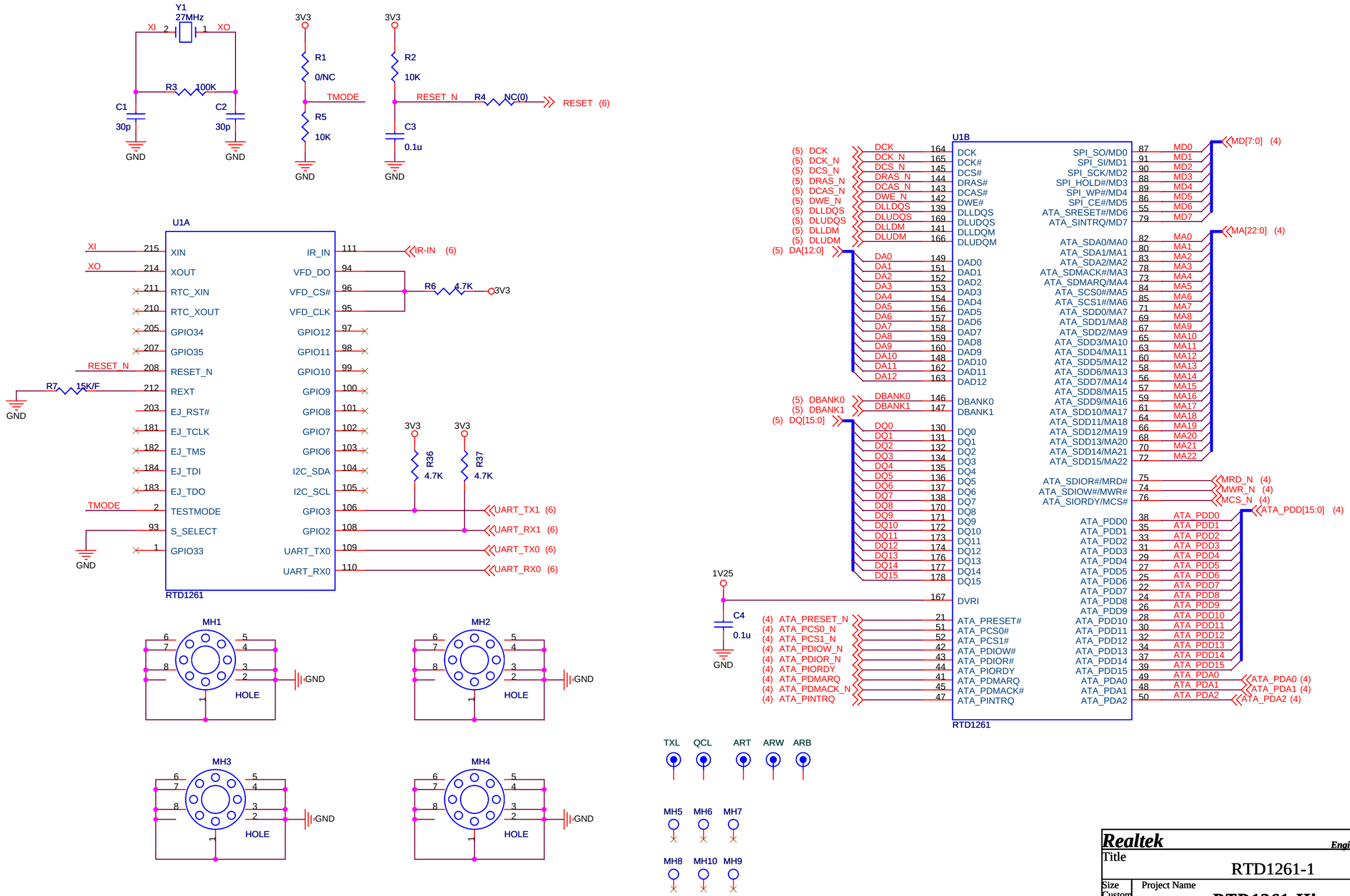

Realtek		*Engineer: Tenno Lin*
Title	RTD1261-1	
Size Custom	Project Name ***RTD1261-Hisense***	Rev 0.2
Date: Thursday, January 24, 2008	Sheet 2 of 11	

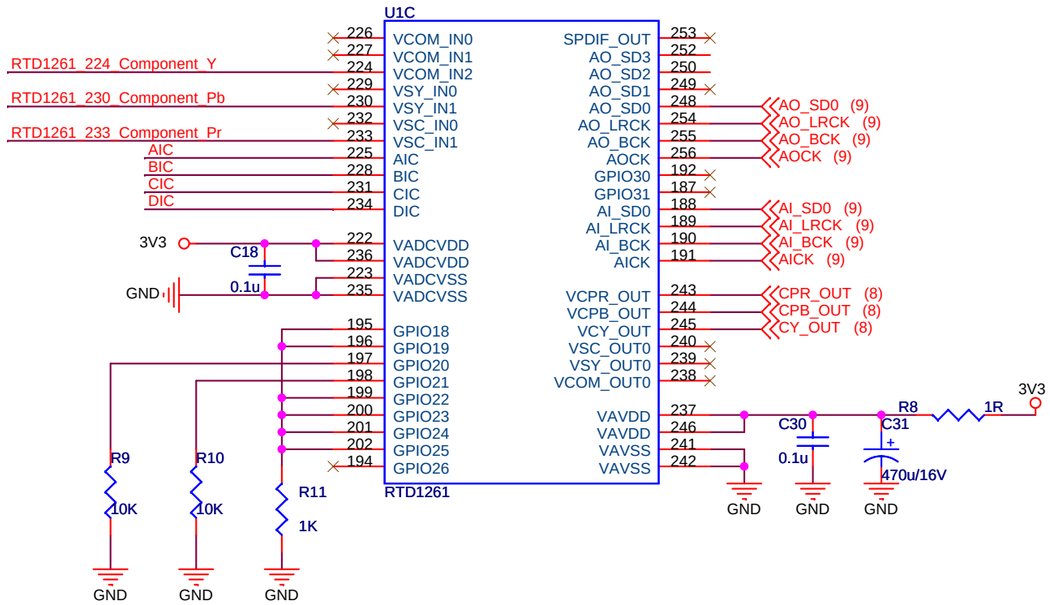

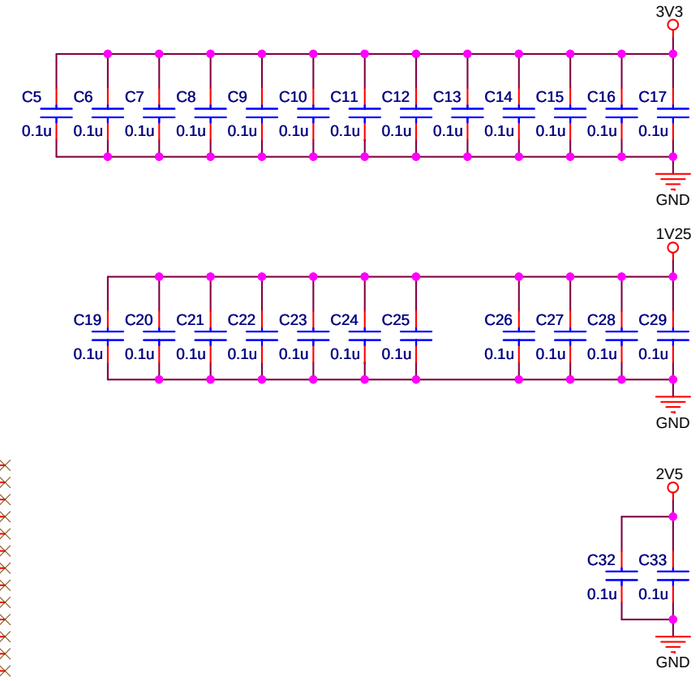

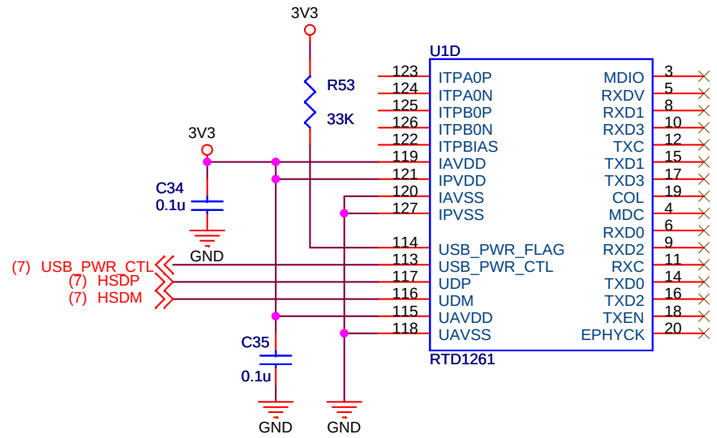

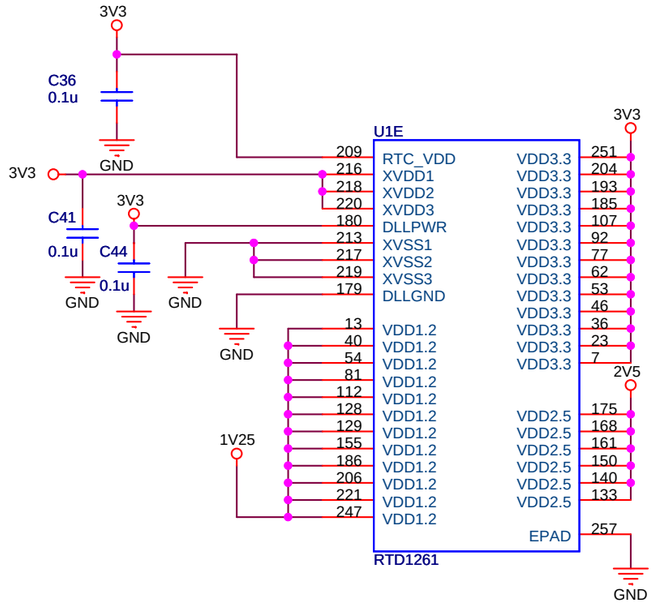

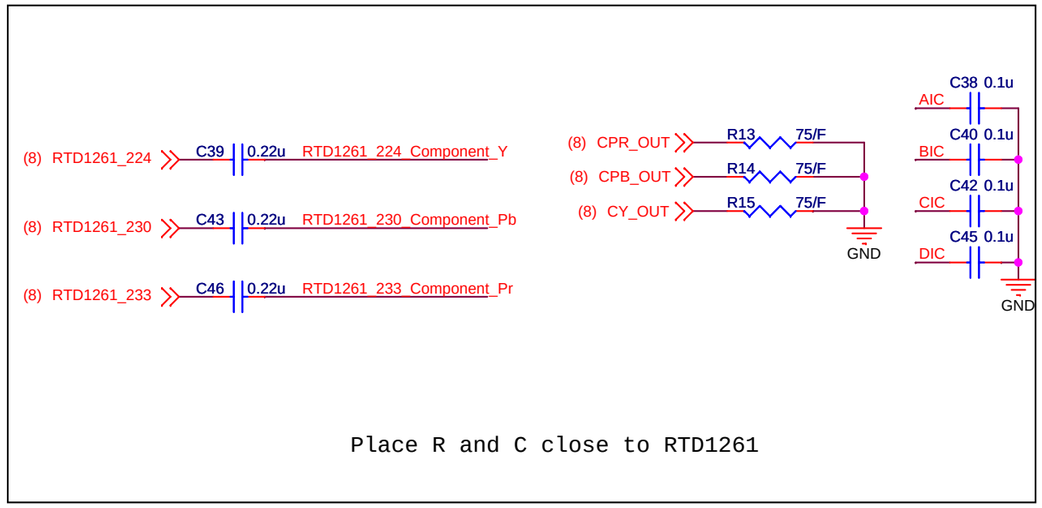

Realtek		*Engineer: Tenno Lin*
Title	RTD1261-2	
Size Custom	Project Name ***RTD1261-Hisense***	Rev 0.2
Date: Thursday, January 24, 2008	Sheet 3 of 11	

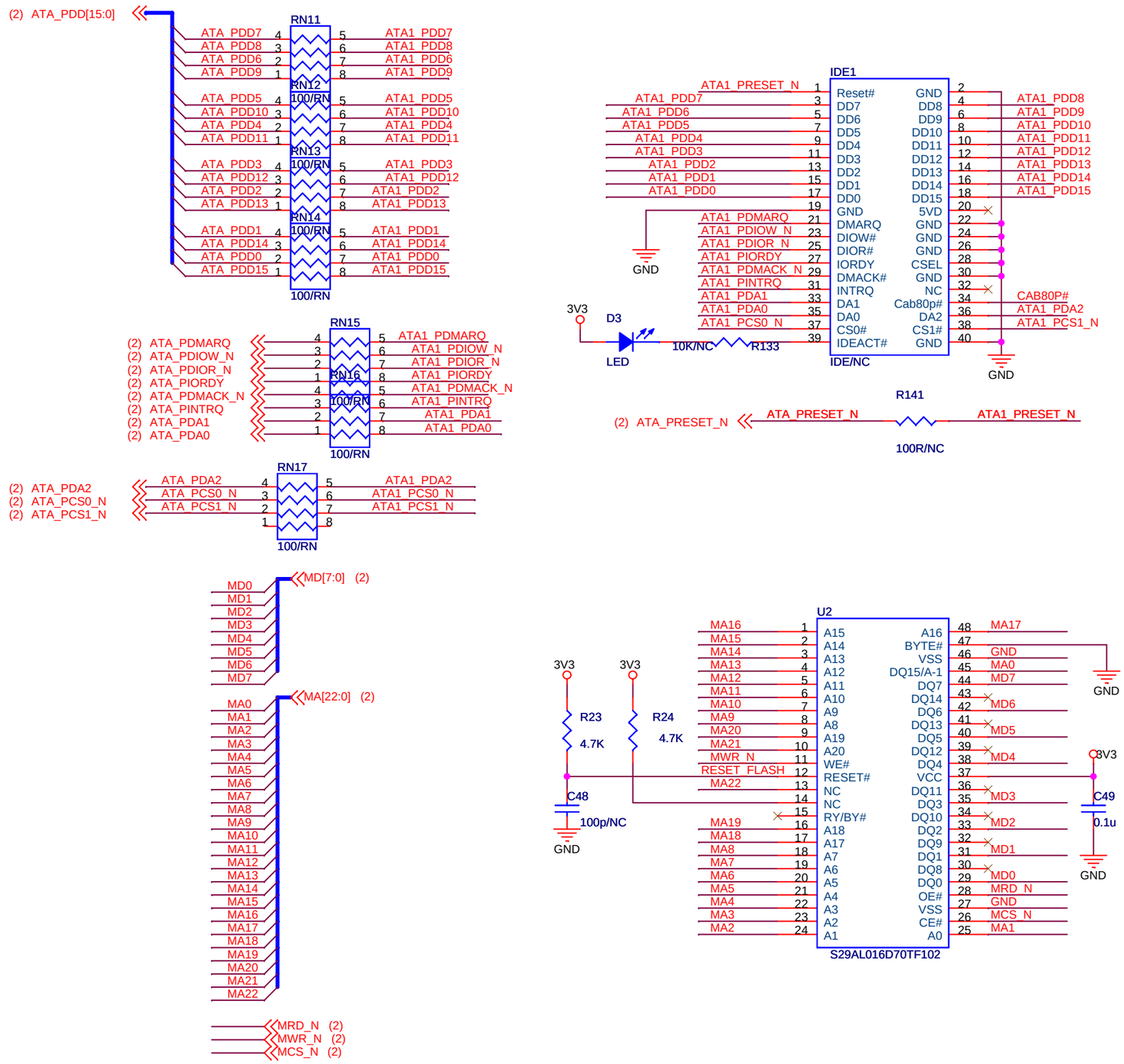

Realtek		*Engineer: Tenno Lin*
Title	IDE & Flash	
Size Custom	Project Name **RTD1261-Hisense**	Rev 0.2
Date: Thursday, January 24, 2008	Sheet 4 of 11	

DDR termination resistors should be 100 ohm for 2-layer PCB (1.6mm)
or 50 ohm for 4-layer PCB (1.6mm)

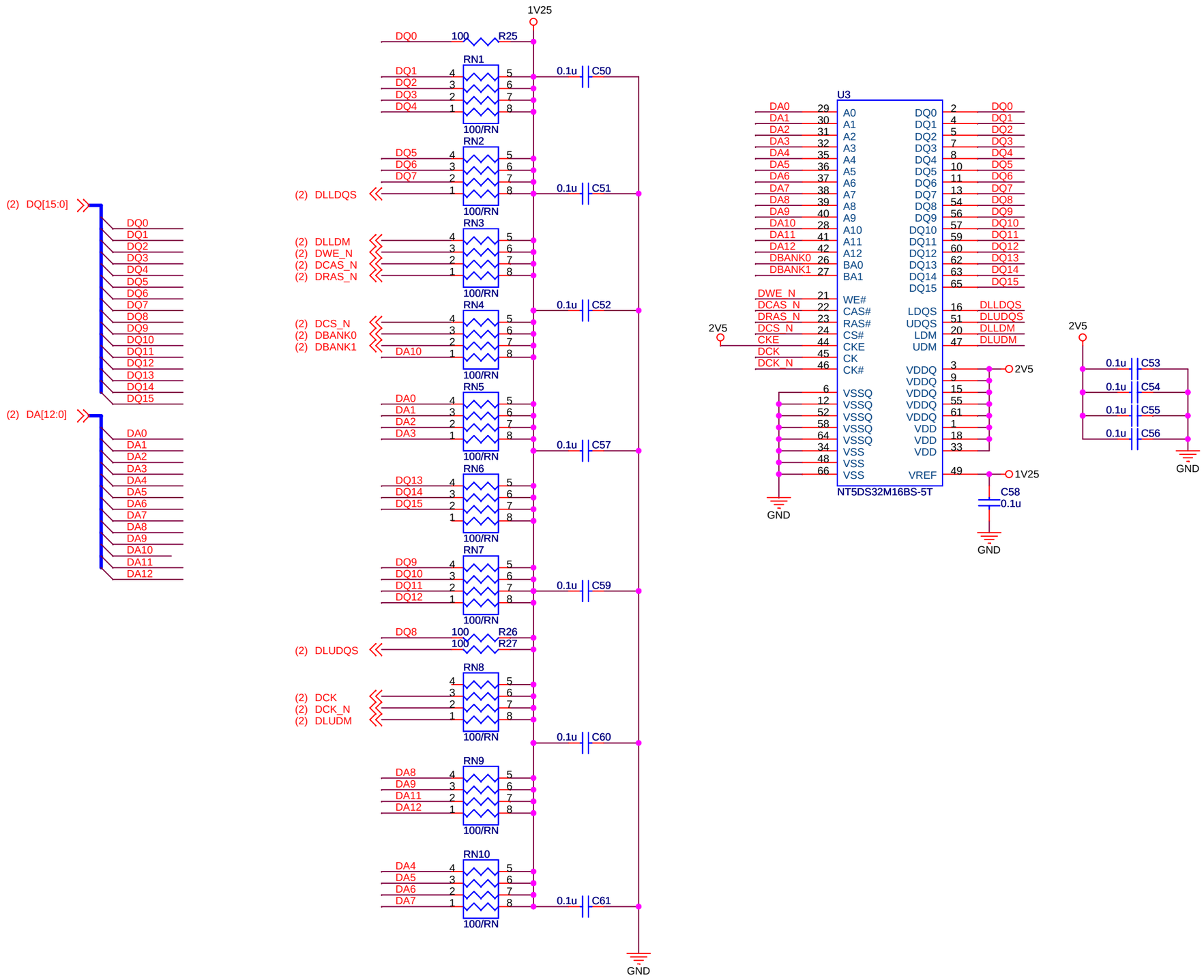

Realtek Engineer: Tenno Lin

Title: DDR

Size: Custom | Project Name: RTD1261-Hisense | Rev: 0.2

Date: Thursday, January 24, 2008 | Sheet 5 of 11

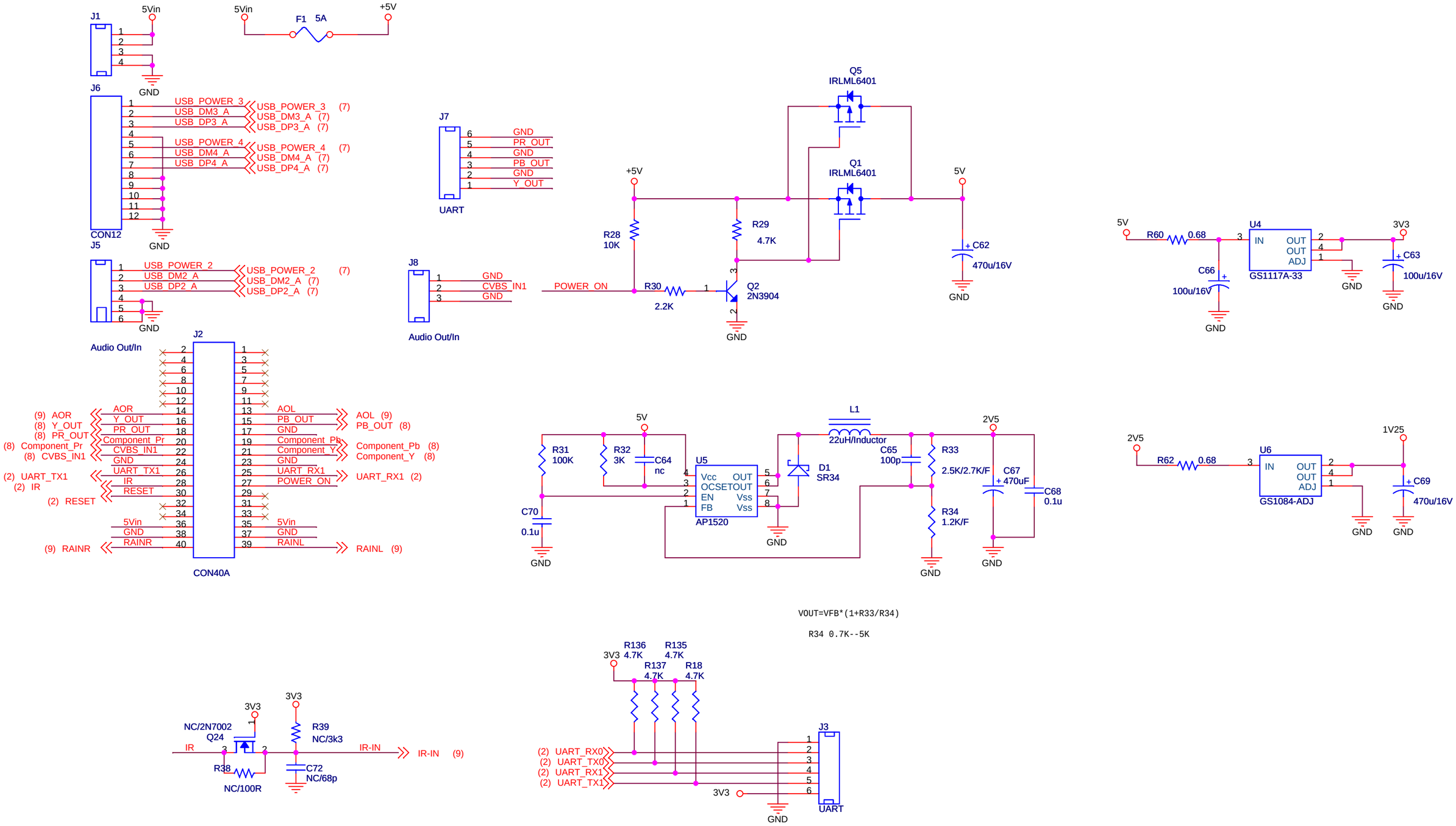

Realtek		*Engineer: Tenno Lin*
Title	Power & Connectors	
Size B	Project Name **RTD1261-Hisense**	Rev 0.2
Date: Thursday, January 24, 2008	Sheet 6 of 11	

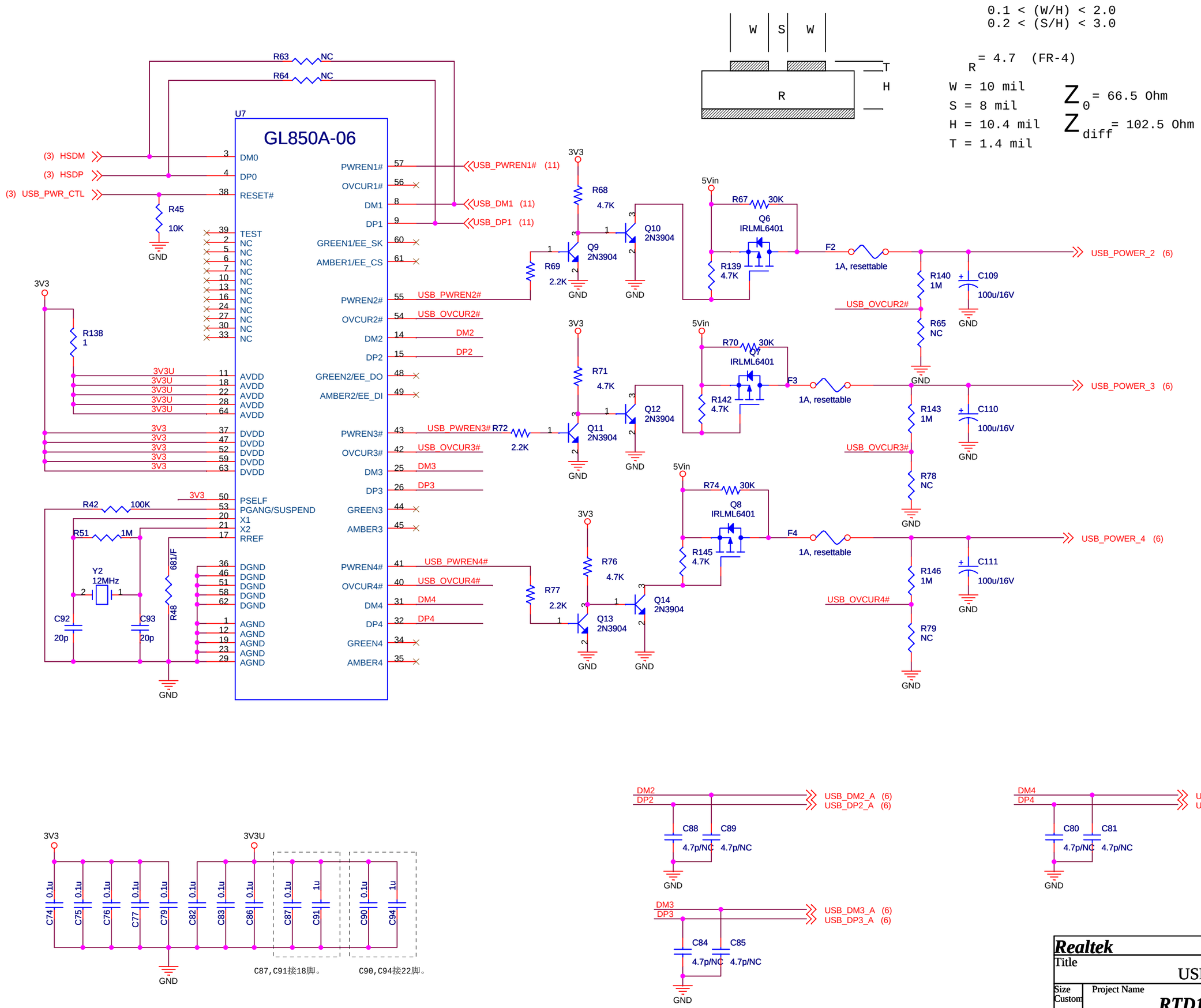
0.1 < (W/H) < 2.0
0.2 < (S/H) < 3.0
R = 4.7 (FR-4)
W = 10 mil
S = 8 mil
H = 10.4 mil
T = 1.4 mil
Z0 = 66.5 Ohm
Zdiff = 102.5 Ohm
U7
GL850A-06
(3) HSDM
(3) HSDP
(3) USB_PWR_CTL
R63 NC
R64 NC
R45 10K
R138 1
R42 100K
R51 1M
Y2 12MHz
C92 20p
C93 20p
R48 681/F
USB_PWREN1# (11)
USB_DM1 (11)
USB_DP1 (11)
USB_PWREN2#
USB_OVCUR2#
USB_PWREN3#
USB_OVCUR3#
USB_PWREN4#
USB_OVCUR4#
R68 4.7K
R69 2.2K
R71 4.7K
R72 2.2K
R76 4.7K
R77 2.2K
Q9 2N3904
Q10 2N3904
Q11 2N3904
Q12 2N3904
Q13 2N3904
Q14 2N3904
R67 30K
R70 30K
R74 30K
Q6 IRLML6401
Q7 IRLML6401
Q8 IRLML6401
R139 4.7K
R142 4.7K
R145 4.7K
F2 1A, resettable
F3 1A, resettable
F4 1A, resettable
USB_POWER_2 (6)
USB_POWER_3 (6)
USB_POWER_4 (6)
R140 1M
R65 NC
R143 1M
R78 NC
R146 1M
R79 NC
C109 100u/16V
C110 100u/16V
C111 100u/16V
C74 0.1u
C75 0.1u
C76 0.1u
C77 0.1u
C79 0.1u
C82 0.1u
C83 0.1u
C86 0.1u
C87 0.1u
C91 1u
C90 0.1u
C94 1u
C87,C91接18脚。
C90,C94接22脚。
DM2
DP2
USB_DM2_A (6)
USB_DP2_A (6)
C88 4.7p/NC
C89 4.7p/NC
DM4
DP4
USB_DM4_A (6)
USB_DP4_A (6)
C80 4.7p/NC
C81 4.7p/NC
DM3
DP3
USB_DM3_A (6)
USB_DP3_A (6)
C84 4.7p/NC
C85 4.7p/NC
Realtek
Engineer: Tenno Lin
Title
USB Hub
Size Custom
Project Name
RTD1261-Hisense
Rev 0.2
Date: Thursday, January 24, 2008
Sheet 7 of 11

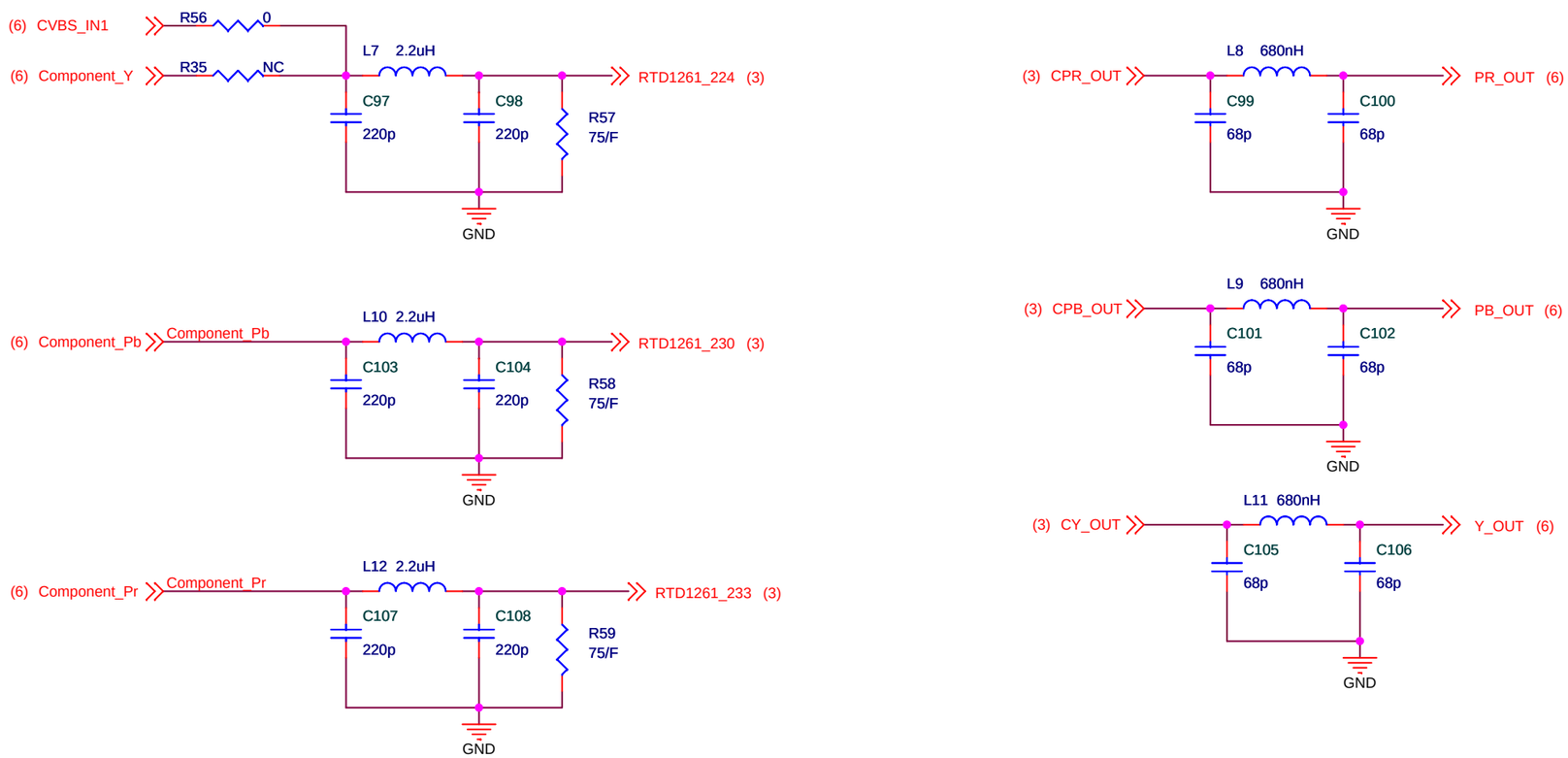

Realtek		*Engineer: Tenno Lin*
Title	Video Out	
Size Custom	Project Name ***RTD1261-Hisense***	Rev 0.2
Date: Thursday, January 24, 2008	Sheet 8 of 11	

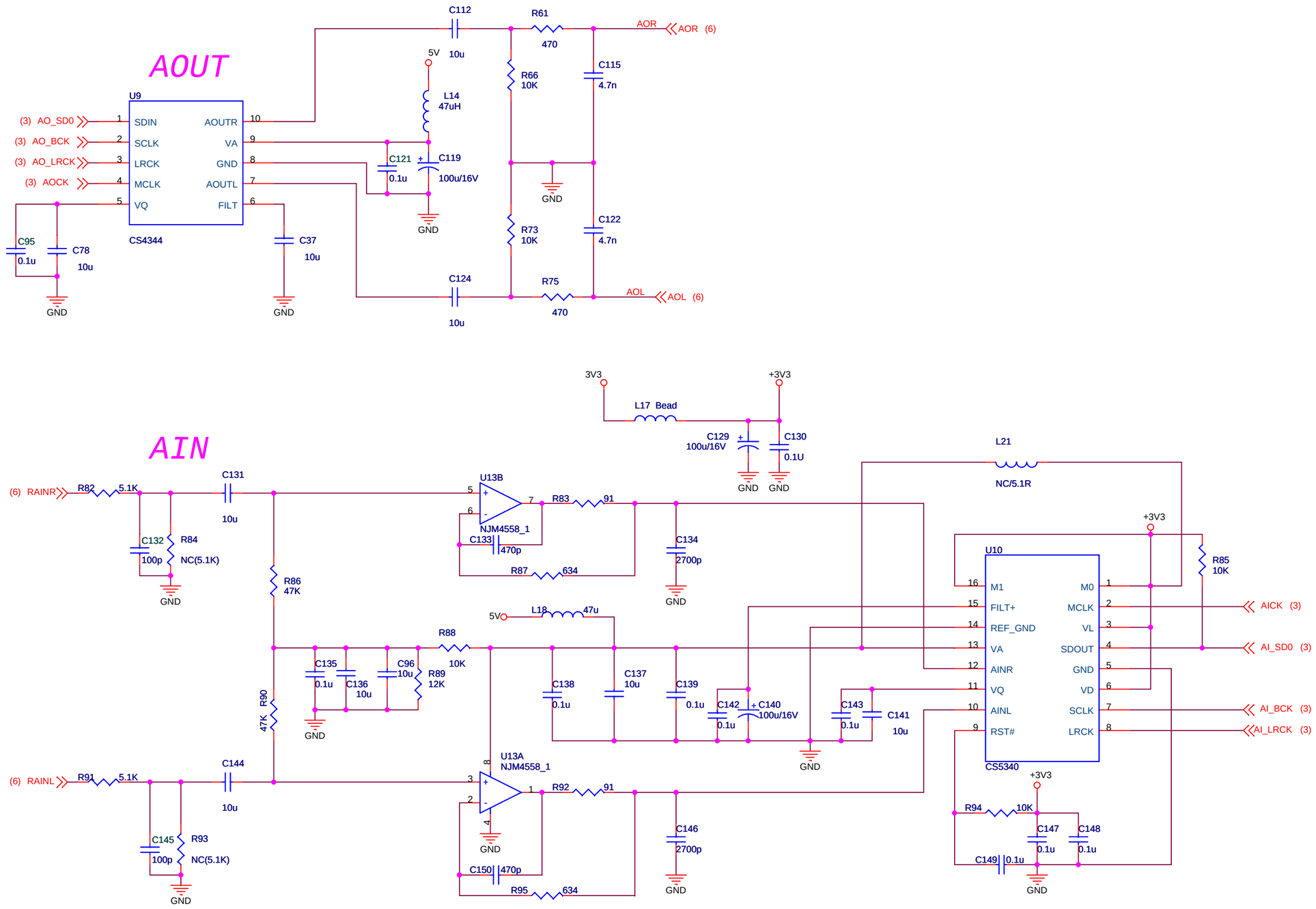

Realtek		*Engineer: Tenno Lin*
Title	AIO CODEC & buffer	
Size Custom	Project Name ***RTD1261-Hisense***	Rev 0.2
Date: Thursday, January 24, 2008	Sheet 9 of 11	

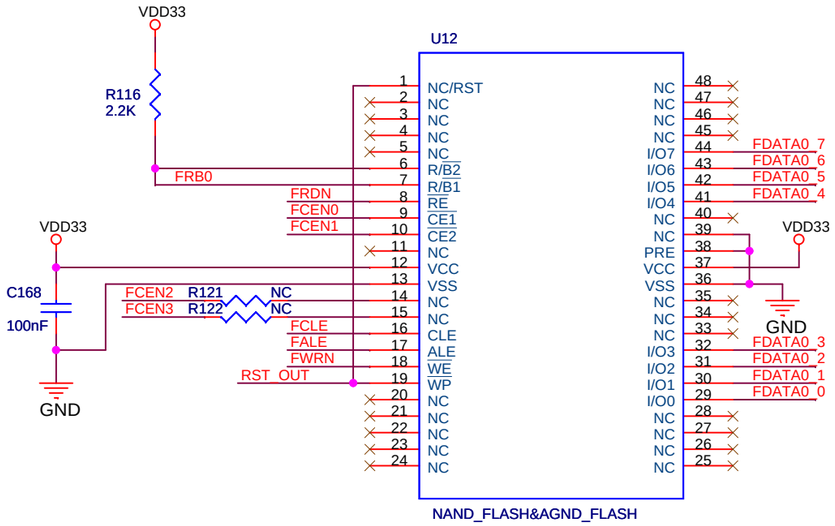

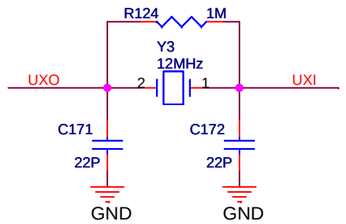

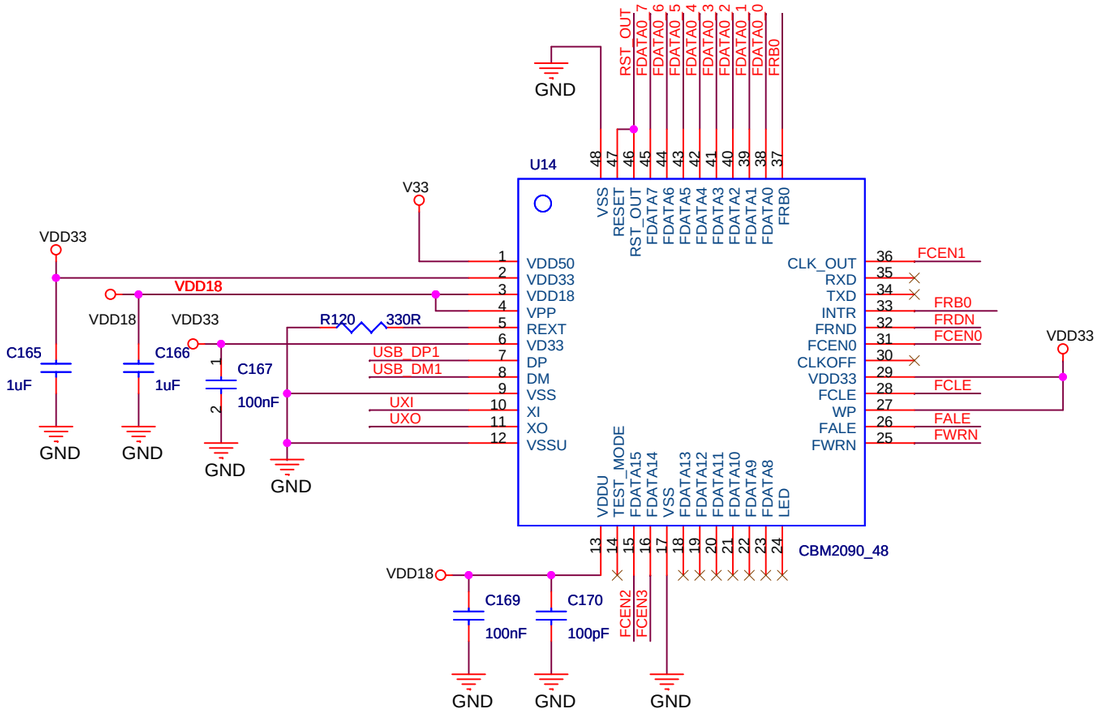

NOTE1:
1)if the U1,U3 flash is NAND double die FLASH,R3 should be added;and R9,R10,R12 should be removed.
2) else if the U1,U3 flash is HY27US08561M、K9K2808、KM29U128 or the FLASH is made in TOSHIBA or SANDISK ,single die, R10, should be added;and R3,R9,R12 removed.
3)else the U1,U3 flash is NAND or AG-AND single die FLASH,R10,R3,R9,R12 should be removed.

NOTE3:
if don't consider ESD ,The FB2 shoul be shorted and R11 should removed .otherwise all of them should be added .

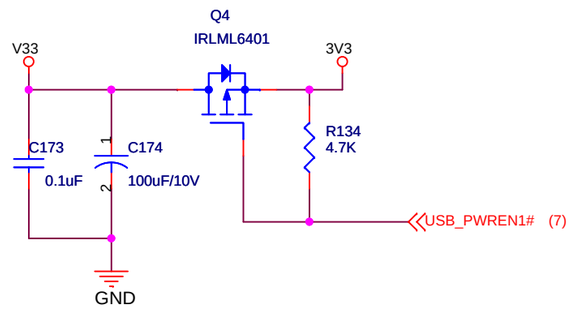

NOTE2:
1)if U1,U3 is single die flash R3,R4,R5 should be removed.
2)else if Only install One double die flash U1, R5 should be added;and R4,R9,R12 removed.
3)if U1 only install one 4 CE FLASH R3,R5,R9,R12should be added;and R4 should be removed.
4) if install 2PCS MLC flash,R4 should be added,R5,R6,R7 should be removed.

NOTE4:
This application supported:
1)U1 is 1pcs of single die or double die or quadruple die flash.
2)or U1,U3 is 2pcs of single die or double die flash
3)U3 can not be quadruple die flash
4)8bit flash
5)NAND single die or double die or quadruple die flash
6)AG-AND single die flash
7)No write protect switch

Realtek		Engineer: Tenno Lin
Title	Ethernet	
Size Custom	Project Name **RTD1261-Hisense**	Rev 0.2
Date: Tuesday, January 29, 2008	Sheet 11 of 11	