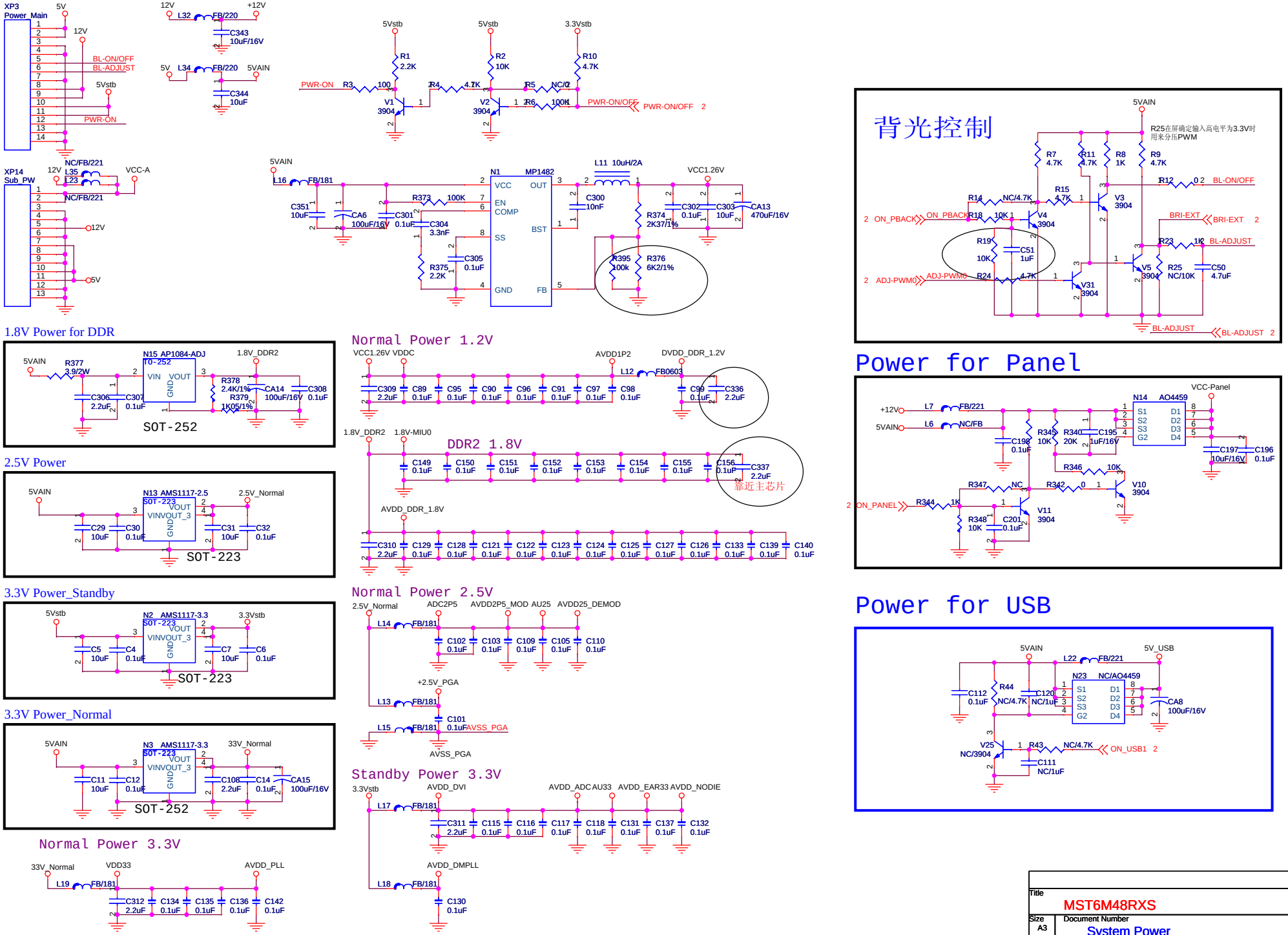

Title	MST6M48RXS		
Size A3	Document Number System Power		Rev A
Date: Thursday, July 15, 2010	Sheet 1 of 7		

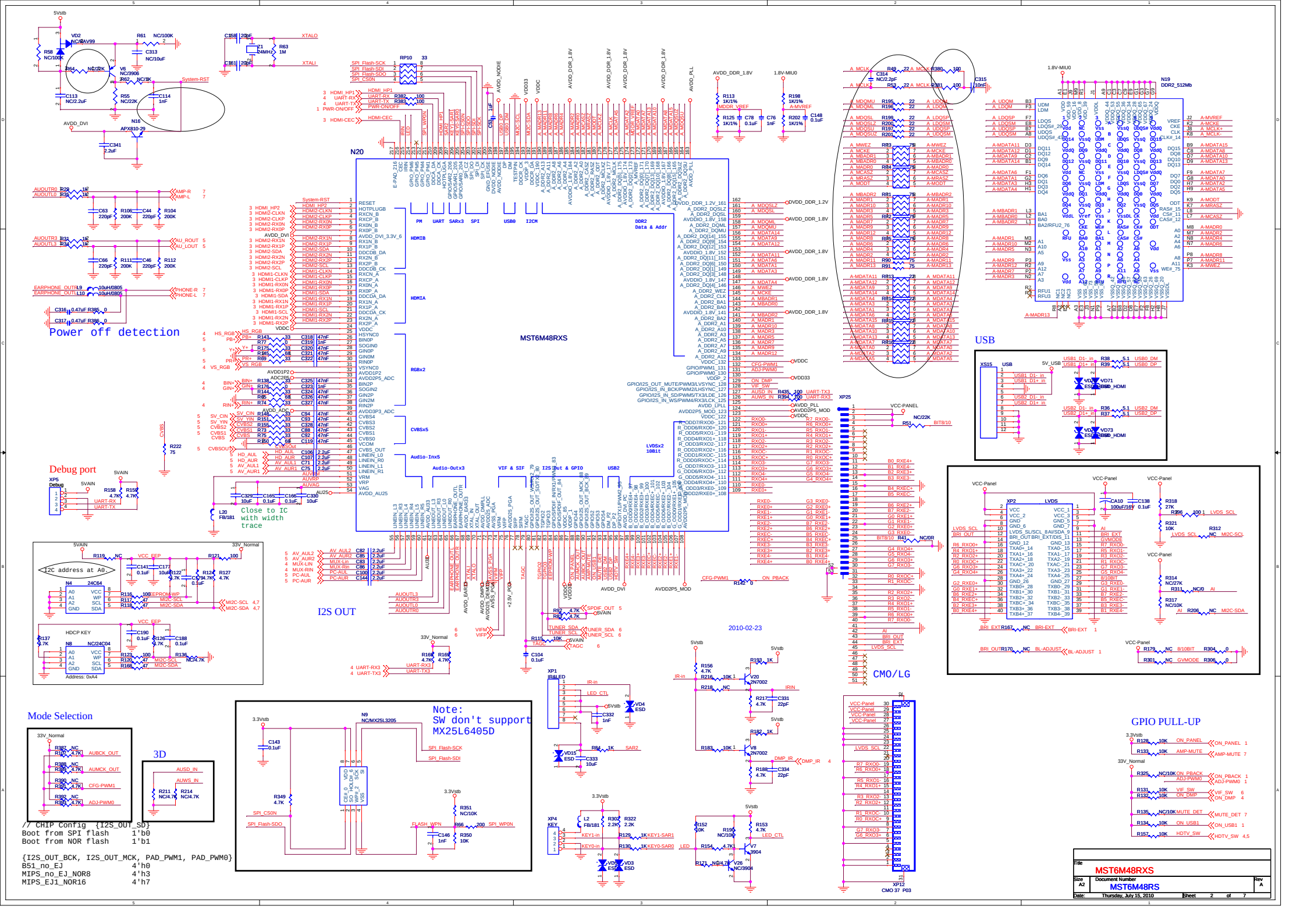


```
// CHIP Config  {I2S_OUT_SD}
Boot from SPI flash      1'b0
Boot from NOR flash      1'b1

{I2S_OUT_BCK, I2S_OUT_MCK, PAD_PWM1, PAD_PWM0}
B51_no_EJ                4'h0
MIPS_no_EJ_NOR8          4'h3
MIPS_EJ1_NOR16           4'h7
```

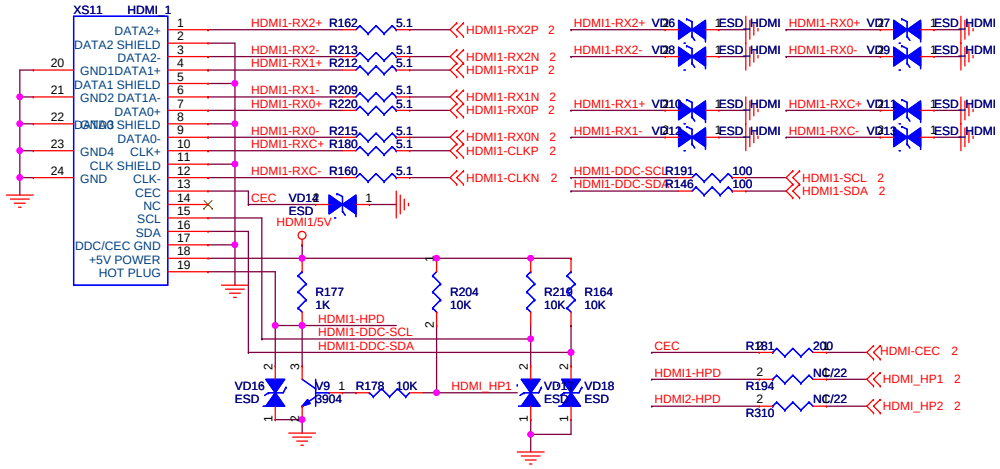

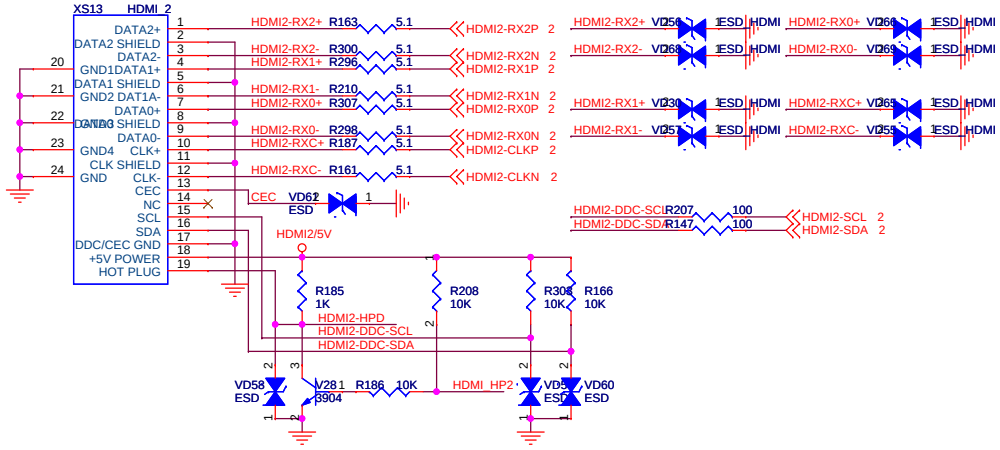

Title	MST6M48RXS	
Size A3	Document Number HDMI	Rev A
Date: Thursday, July 15, 2010	Sheet 3 of 7	

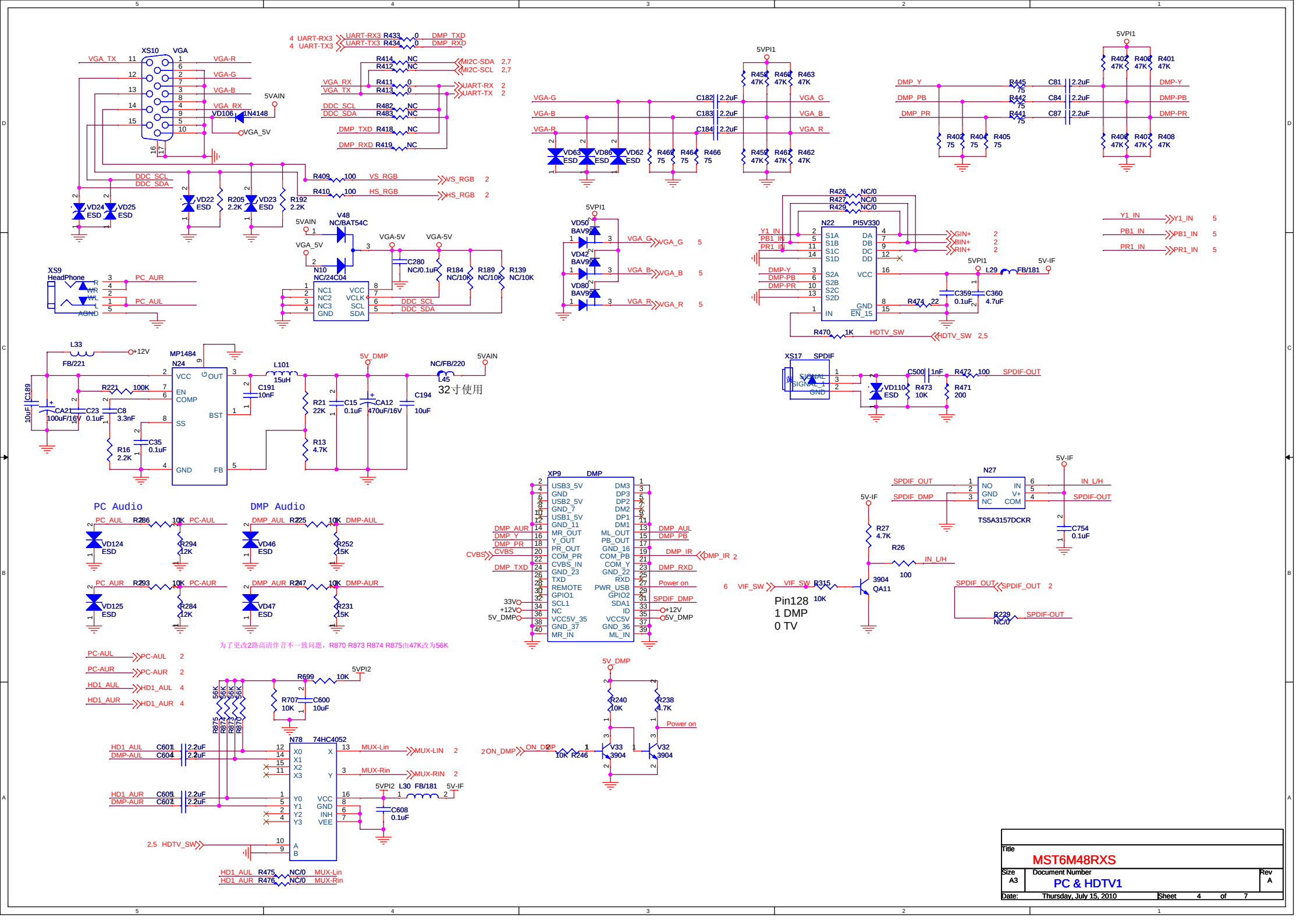

Title	MST6M48RXS		
Size A3	Document Number PC & HDTV1		Rev A
Date: Thursday, July 15, 2010	Sheet 4 of 7		

HDTV1 AV1 input

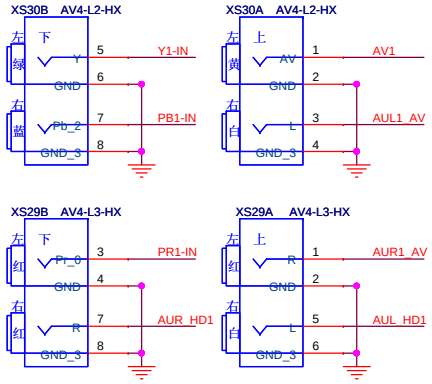

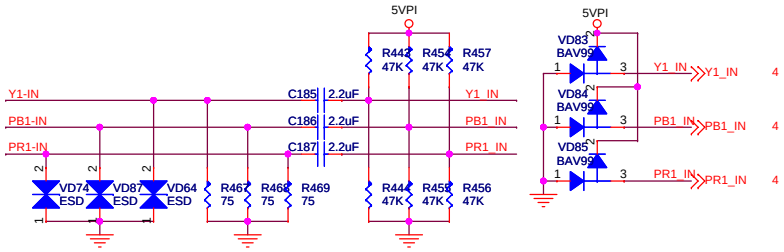

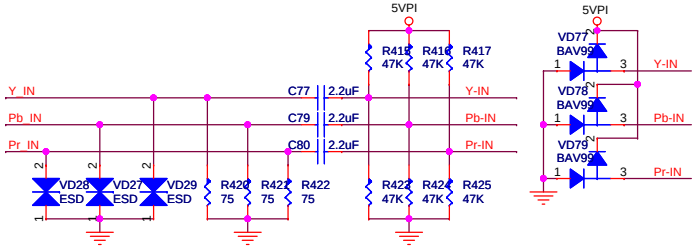

HDTV2 input

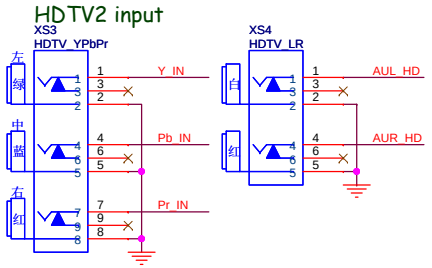

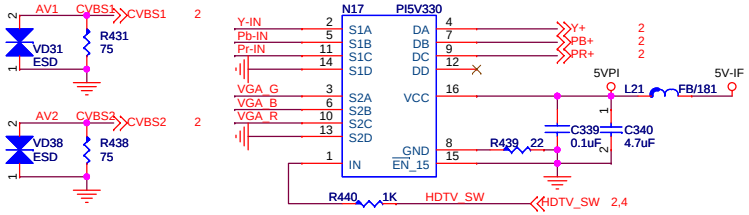

AV2_input

AV_output

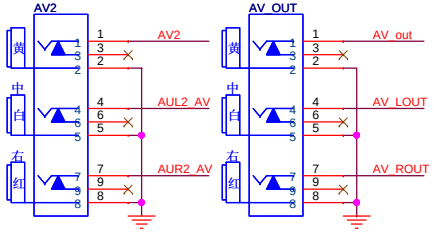

VGA_G — VGA_G 4
VGA_B — VGA_B 4
VGA_R — VGA_R 4

为了更改2路高清伴音不一致问题，R267 R243更改为15K

HDTV Audio

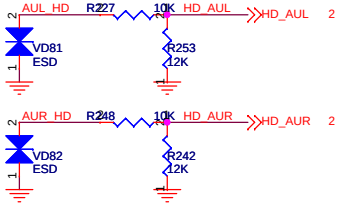

HDTV1 Audio

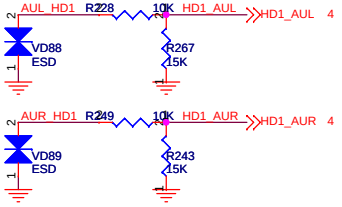

AV2 Audio

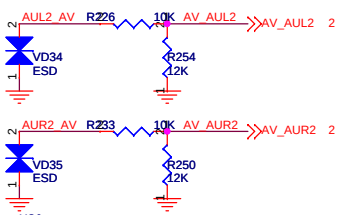

Side AV Audio

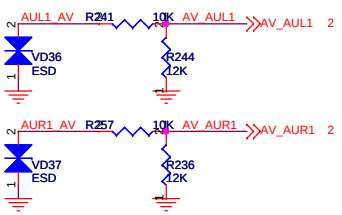

XS6
SVideo
Cin
Yin
GND
SV_C
SV_Y
SV_YIN
SV_CIN
VD48 ESD
R232 75
VD49 ESD
R230 75

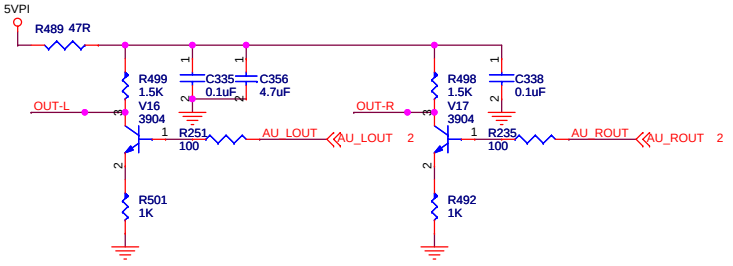

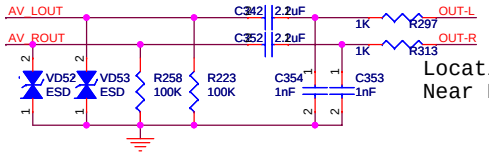

Location
Near RCA.

VIDEO_OUT

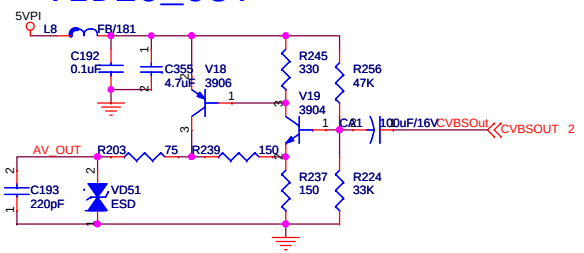

Title	MST6M48RXS	
Size A3	Document Number: Video & Audio	Rev A
Date: Thursday, July 15, 2010	Sheet 5 of 7	

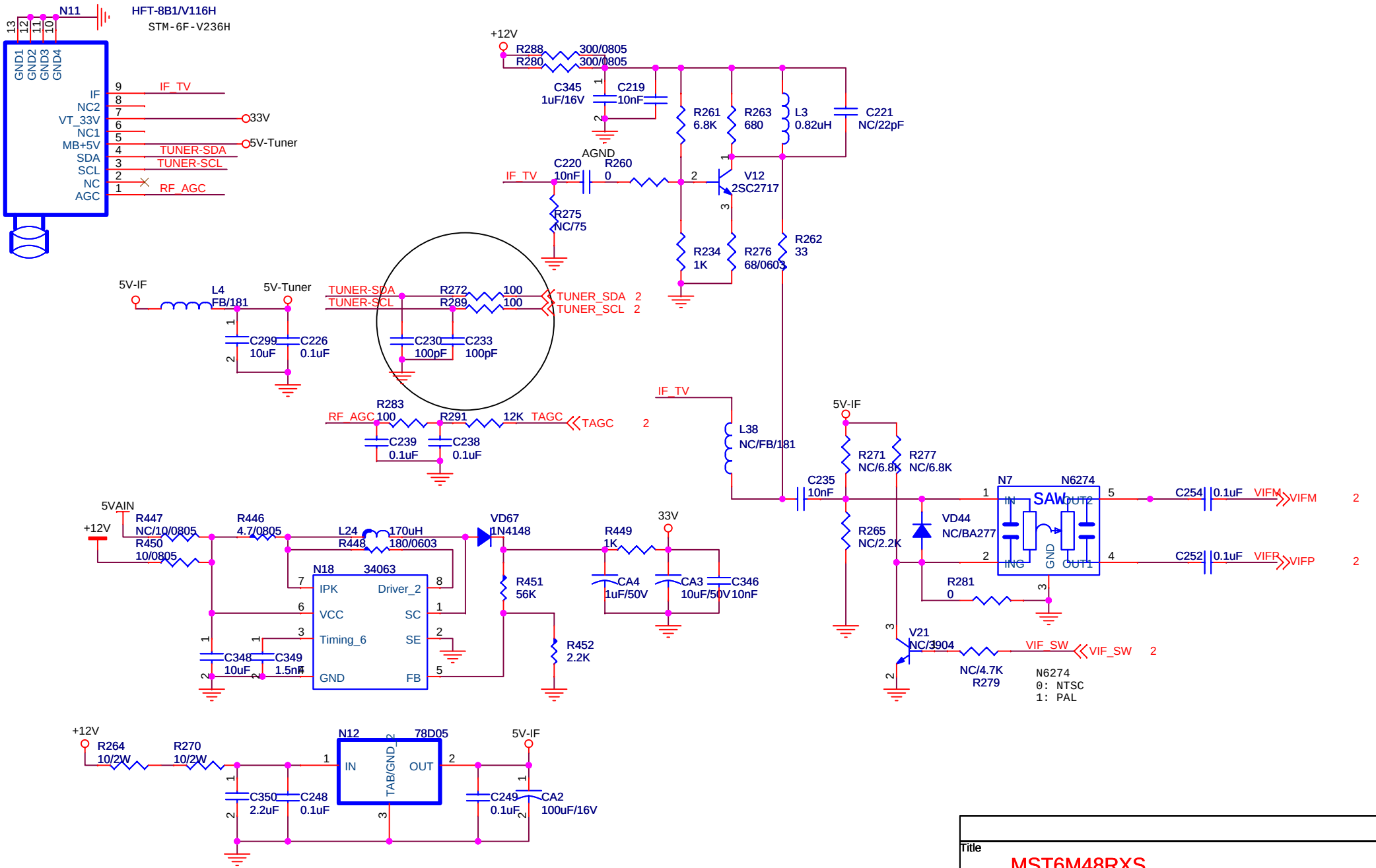

Title	MST6M48RXS	
Size A4	Document Number Tuner	Rev A
Date: Thursday, July 15, 2010	Sheet 6 of 7	

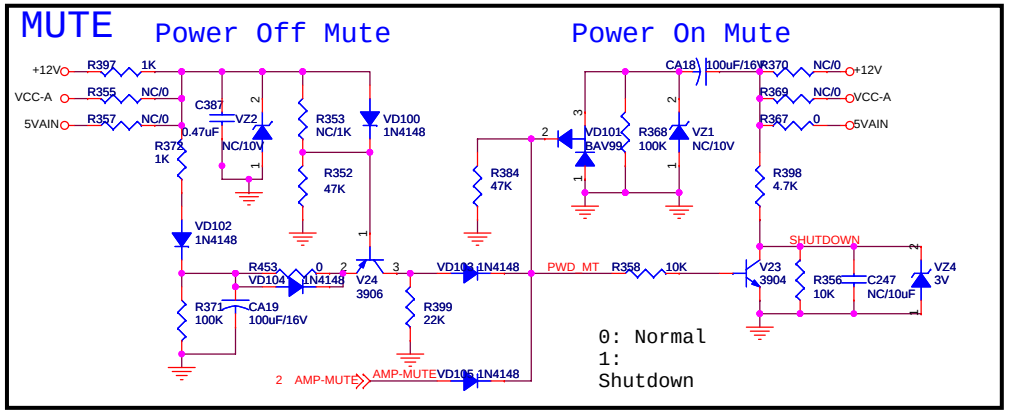

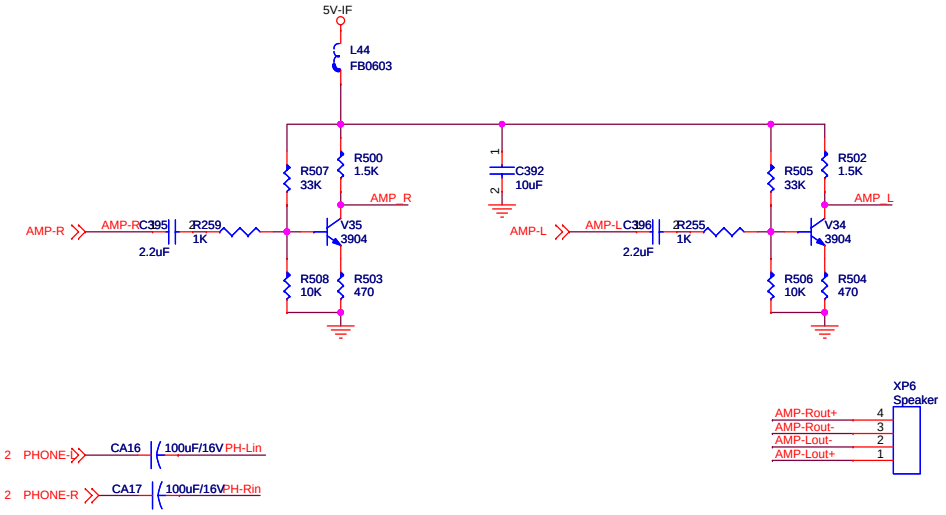

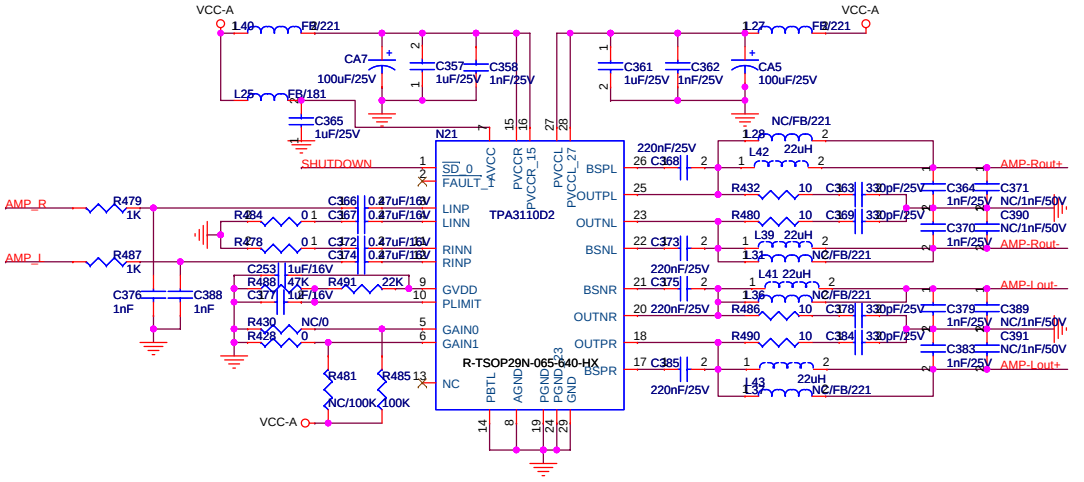

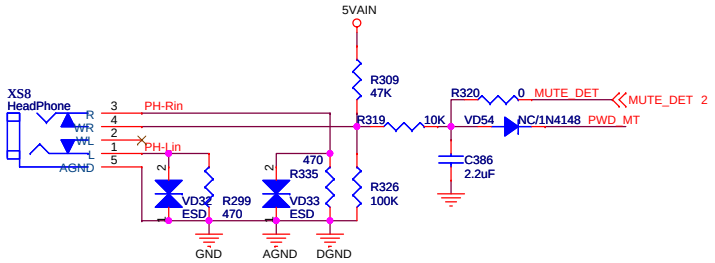

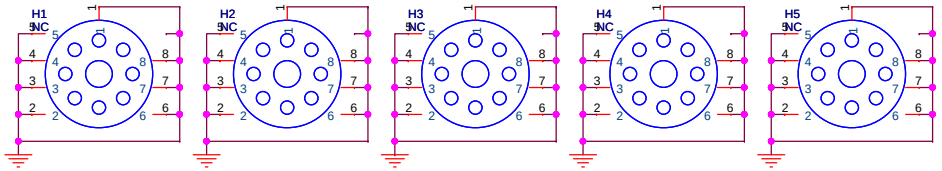

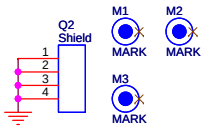

Title	MST6M48RXS	
Size A3	Document Number: Audio Amplifier	Rev A
Date: Thursday, July 15, 2010	Sheet 7 of 7	