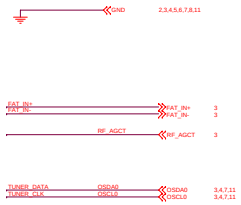
GND
2,3,4,5,6,7,8,11
FAT_IN+
FAT_IN-
FAT_IN+
FAT_IN-
3
3
RF_AGCT
RF_AGCT
3
TUNER_DATA
TUNER_CLK
OSDA0
OSCL0
OSDA0
OSCL0
3,4,7,11
3,4,7,11

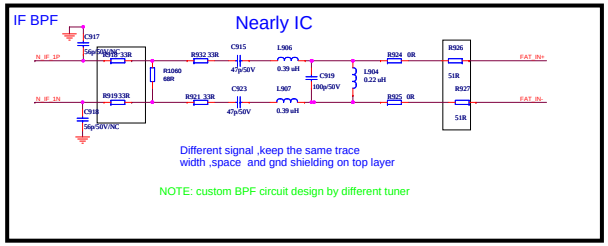
IF BPF
Nearly IC
C917
56p/50V/NC
N_IF_1P
R918 33R
R1060
68R
R932 33R
C915
47p/50V
L906
0.39 uH
C919
100p/50V
L904
0.22 uH
R924 0R
R926
51R
R927
51R
FAT_IN+
R919 33R
N_IF_1N
C918
56p/50V/NC
R921 33R
C923
47p/50V
L907
0.39 uH
R925 0R
FAT_IN-
Different signal ,keep the same trace
width ,space and gnd shielding on top layer
NOTE: custom BPF circuit design by different tuner

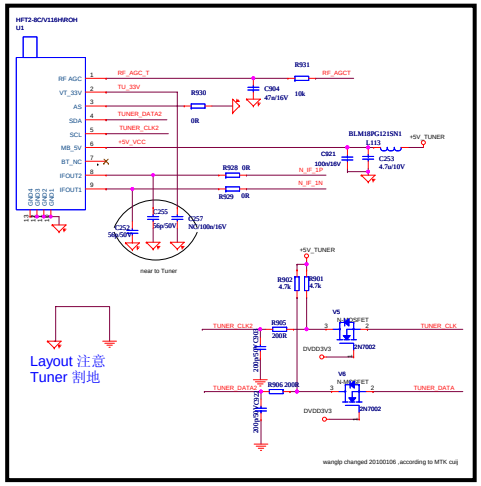
HFT2-8C/V118HROH
U1
RF_AGC
VT_33V
AS
SDA
SCL
MB_5V
BT_NC
IFOUT2
IFOUT1
GND4
GND3
GND2
GND1
RF_AGC_T
TU_33V
TUNER_DATA2
TUNER_CLK2
+5V_VCC
RF_AGCT
R931
10k
R930
0R
C904
47u/16V
BLM18PG121SN1
L113
+5V_TUNER
C921
100n/16V
C253
4.7u/10V
R928 0R
N_IF_1P
R929 0R
N_IF_1N
C255
56p/50V
C257
NC/100u/16V
C252
56p/50V
near to Tuner
+5V_TUNER
R902
4.7k
R901
4.7k
V5
N-MOSFET
TUNER_CLK2
R905
200R
TUNER_CLK
2N7002
DVDD3V3
C907
100n/16V
V6
N-MOSFET
TUNER_DATA2
R906 200R
TUNER_DATA
2N7002
DVDD3V3
C908
100n/16V
Layout 注意
Tuner 割地
wangjp changed 20100106 ,according to MTK cuij

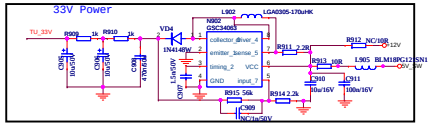
33V Power
TU_33V
R909 1k
R910 1k
VD4
1N4148W
C915
1nu/50V
C916
100u/50V
C918
4.7u/16V
L902
LGA0505-170uHK
N902
GSC3403
collector_driver_4
emitter_sense_5
timing_2
VCC
GND
input_7
C917
1.5u/16V
R911 2.2R
R912 NC/10R
12V
R913 10R
L905 BLM18PG121SN1
5V_5W
C910
10u/16V
C911
100u/16V
R915 56k
C909
NC/1u/50V
R914 2.2k

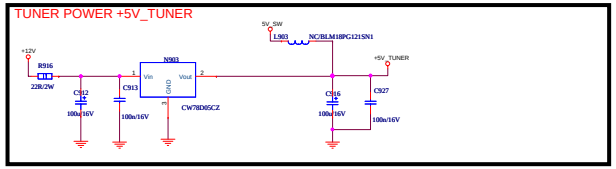
TUNER POWER +5V_TUNER
5V_5W
L903
NC/BLM18PG121SN1
+12V
R916
22R/2W
C912
100u/16V
C913
100u/16V
N903
Vin
Vout
GND
CW78D05CZ
C916
100u/16V
+5V_TUNER
C927
100u/16V

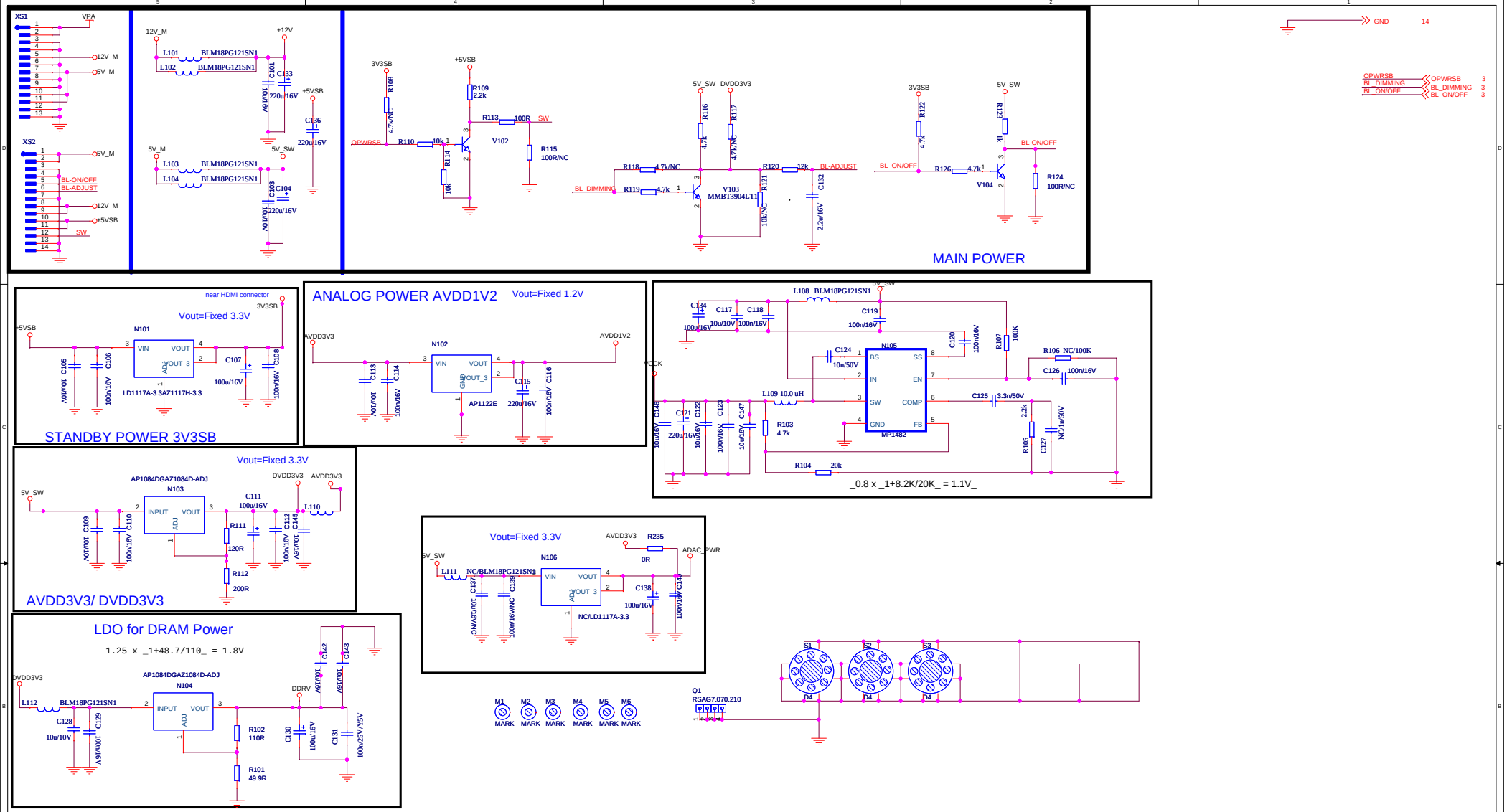
MAIN POWER
STANDBY POWER 3V3SB
near HDMI connector
Vout=Fixed 3.3V
ANALOG POWER AVDD1V2
Vout=Fixed 1.2V
_0.8 x _1+8.2K/20K_ = 1.1V_
AVDD3V3/ DVDD3V3
Vout=Fixed 3.3V
LDO for DRAM Power
1.25 x _1+48.7/110_ = 1.8V
Vout=Fixed 3.3V

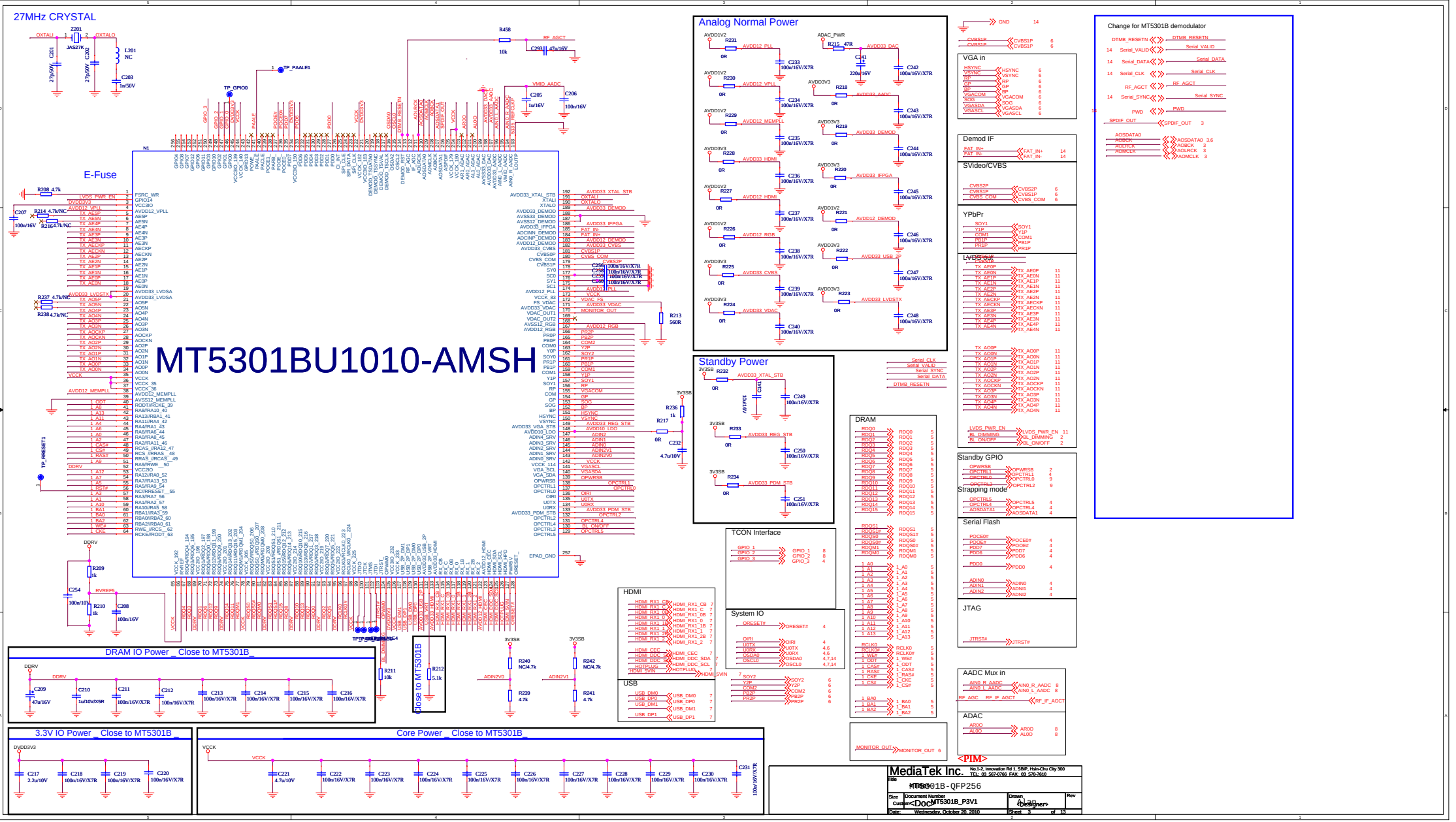
27MHz CRYSTAL
E-Fuse
MT5301BU1010-AMSH
Analog Normal Power
Standby Power
DRAM
TCON Interface
System IO
HDMI
USB
VGA in
Demod IF
SVideo/CVBS
YPbPr
LVDS out
Standby GPIO
Strapping mode
Serial Flash
JTAG
AADC Mux in
ADAC
Change for MT5301B demodulator
DRAM IO Power _Close to MT5301B_
3.3V IO Power _Close to MT5301B_
Core Power _Close to MT5301B_
Close to MT5301B
MediaTek Inc.
No.1-2, Innovation Rd 1, SBIP, Hsin-Chu City 300
TEL: 03-567-0766 FAX: 03-578-7610
MT5301B-QFP256
Size
Document Number
<Doc>
MT5301B_P3V1
Rev
Date: Wednesday, October 20, 2010
Sheet 3 of 13

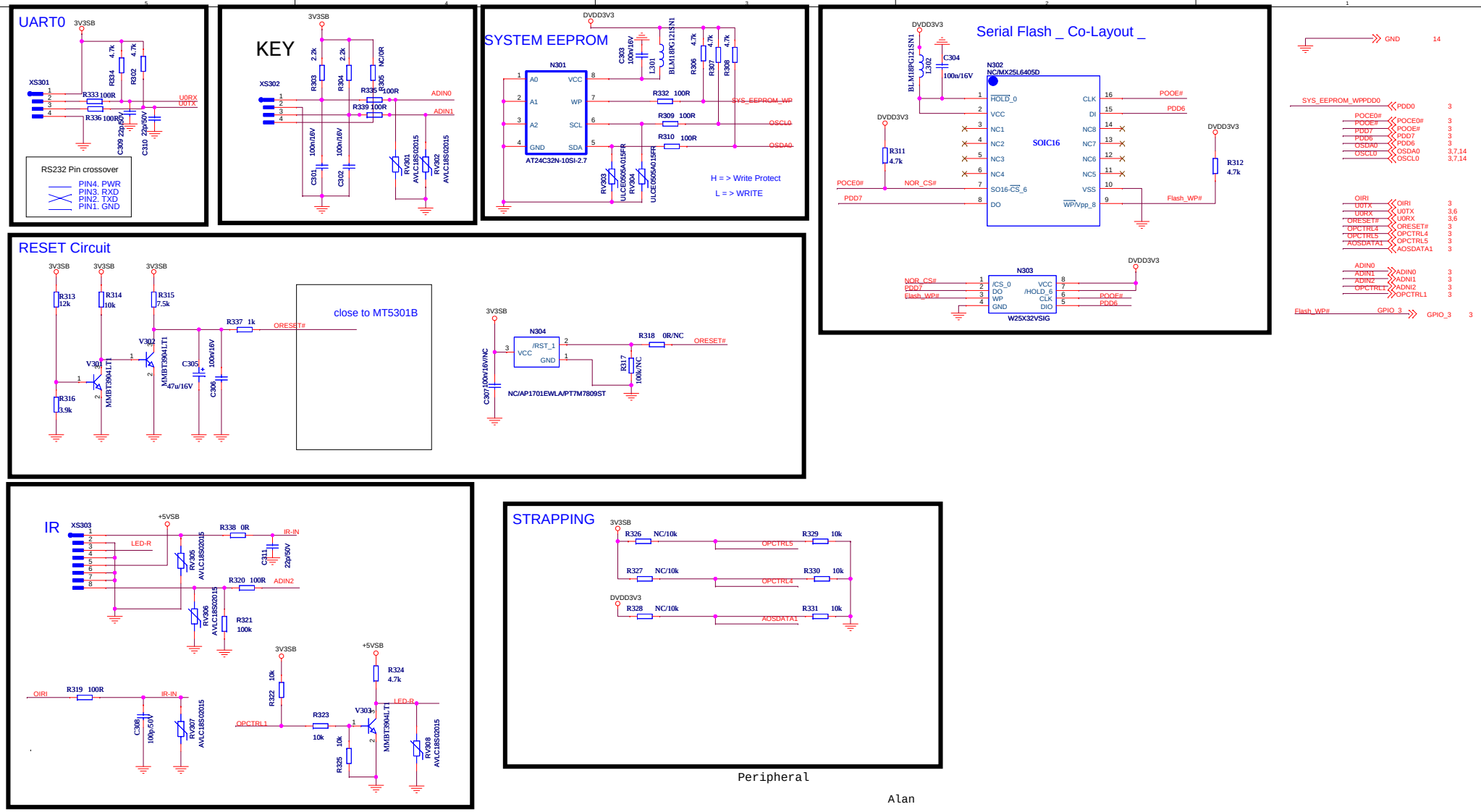

Peripheral

Alan

<PIM>

MediaTek Inc.	No.1-2, Innovation Rd 1, SBIP, Hsin-Chu City 300 TEL: 03_567-0766 FAX: 03_578-7610	
Title <Title>		
Size C	Document Number <Doc> MT5301B_P3V1	Drawn <Designer> Rev
Date: Thursday, October 14, 2010	Sheet 4 of 13	

DDR2#1-32Mx16-800MHz

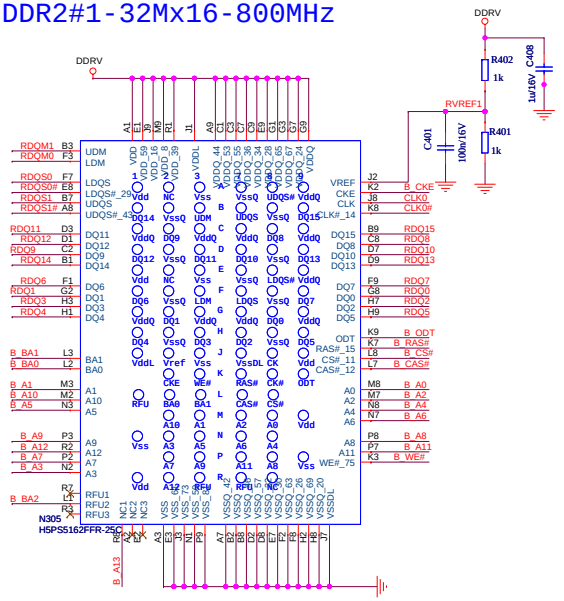

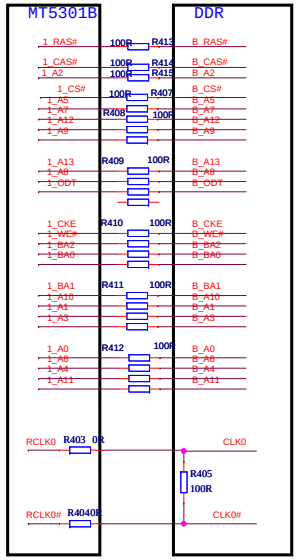

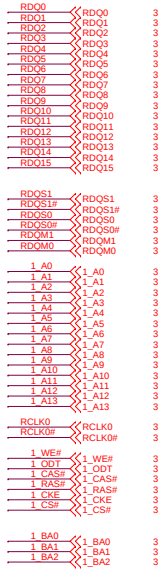

CAPs for DRAM IO Power _ Close to DDR#1 _

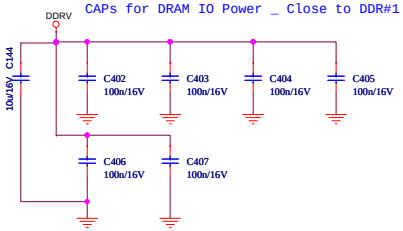

<PIM>

MediaTek Inc.	No.1-2, Innovation Rd 1, SBIP, Hsin-Chu City 300 TEL: 03_567-0766 FAX: 03_578-7610		
Title <Title>			
Size C	Document Number <Doc>MT5301B_P3V1	Drawn <Designer>	Rev
Date: Friday, September 10, 2010		Sheet 5 of 13	

DRAM Interface

Alan

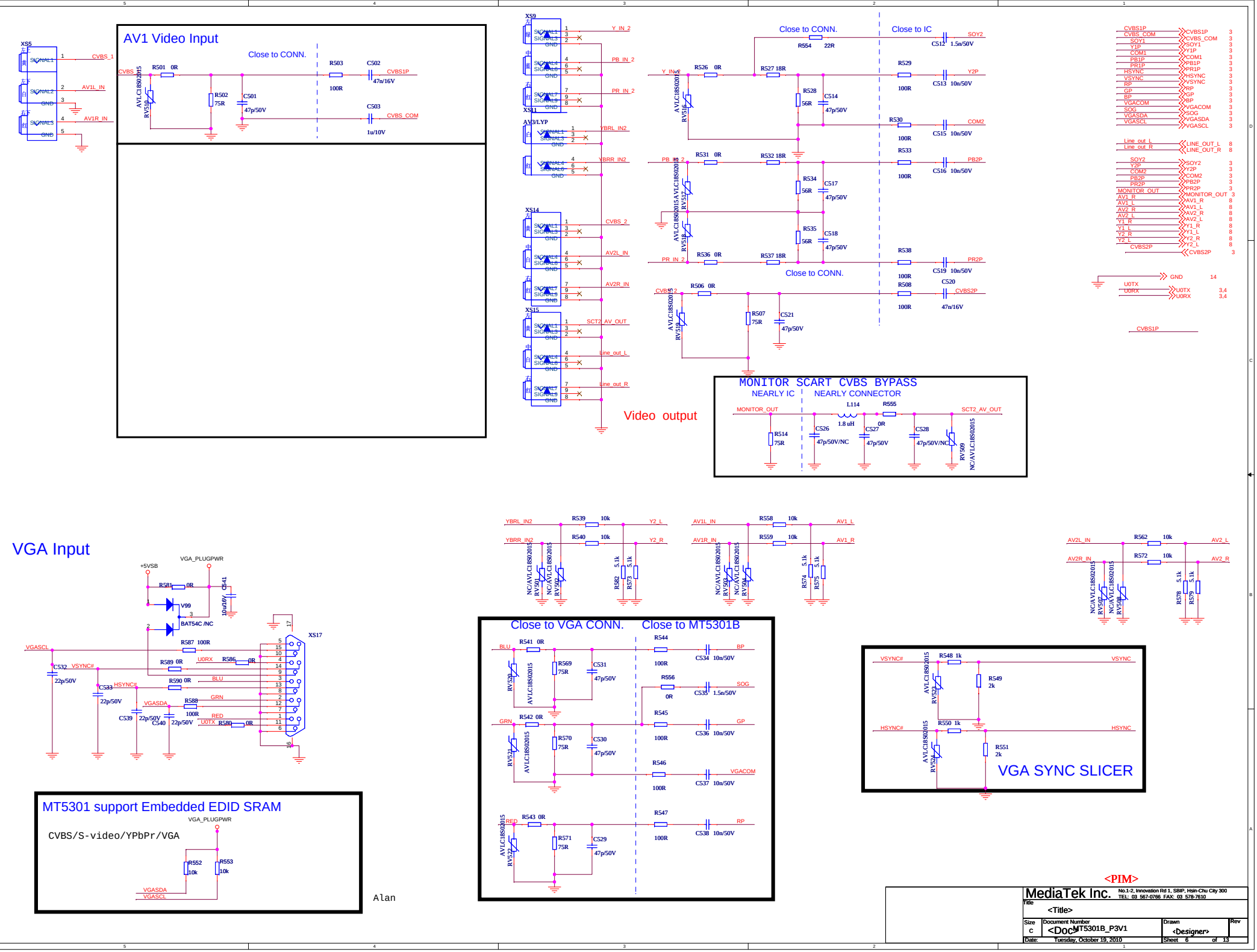
AV1 Video Input
Close to CONN.
XS5
CVBS_1
AV1L_IN
AV1R_IN
R501 0R
R502 75R
C501 47p/50V
R503 100R
C502 47n/16V
C503 1u/10V
CVBS1P
CVBS_COM
XS9
XS11
XS14
XS15
Y_IN_2
PB_IN_2
PR_IN_2
YBRL_IN2
YBRR_IN2
CVBS_2
AV2L_IN
AV2R_IN
SCT2_AV_OUT
Line_out_L
Line_out_R
Video output
Close to CONN.
Close to IC
R554 22R
C512 1.5n/50V
R526 0R
R527 18R
R528 56R
C514 47p/50V
R529 100R
C513 10n/50V
Y2P
R530 100R
C515 10n/50V
COM2
R531 0R
R532 18R
R534 56R
C517 47p/50V
R533 100R
C516 10n/50V
PB2P
R535 56R
C518 47p/50V
R536 0R
R537 18R
R538 100R
C519 10n/50V
PR2P
Close to CONN.
R506 0R
R507 75R
C521 47p/50V
R508 100R
C520 47n/16V
CVBS2P
MONITOR SCART CVBS BYPASS
NEARLY IC
NEARLY CONNECTOR
MONITOR_OUT
L114 1.8 uH
R555 0R
SCT2_AV_OUT
R514 75R
C526 47p/50V/NC
C527 47p/50V
C528 47p/50V/NC
RV509 NC/AVLC18S02015
CVBS1P
CVBS_COM
SOY1
Y1P
COM1
PB1P
PR1P
HSYNC
VSYNC
RP
GP
BP
VGACOM
SOG
VGASDA
VGASCL
Line_out_L
Line_out_R
SOY2
Y2P
COM2
PB2P
PR2P
MONITOR_OUT
AV1_R
AV1_L
AV2_R
AV2_L
Y1_R
Y1_L
Y2_R
Y2_L
CVBS2P
GND
U0TX
U0RX
VGA Input
VGA_PLUGPWR
+5VSB
R581 0R
C541 10u/16V
V99
BAT54C /NC
XS17
VGASCL
VSYNC#
HSYNC#
VGASDA
U0TX
U0RX
BLU
GRN
RED
R587 100R
R589 0R
R586 0R
R590 0R
R588 100R
R580 0R
C532 22p/50V
C533 22p/50V
C539 22p/50V
C540 22p/50V
MT5301 support Embedded EDID SRAM
VGA_PLUGPWR
CVBS/S-video/YPbPr/VGA
R552 10k
R553 10k
VGASDA
VGASCL
Alan
YBRL_IN2
YBRR_IN2
R539 10k
R540 10k
Y2_L
Y2_R
NC/AVLC18S02015
RV501
RV502
R582 5.1k
R573 5.1k
AV1L_IN
AV1R_IN
R558 10k
R559 10k
AV1_L
AV1_R
RV503
RV504
R574 5.1k
R575 5.1k
AV2L_IN
AV2R_IN
R562 10k
R572 10k
AV2_L
AV2_R
RV507
RV508
R578 5.1k
R579 5.1k
Close to VGA CONN.
Close to MT5301B
BLU
GRN
RED
R541 0R
R542 0R
R543 0R
AVLC18S02015
RV520
RV521
RV522
R569 75R
R570 75R
R571 75R
C531 47p/50V
C530 47p/50V
C529 47p/50V
R544 100R
R556 0R
R545 100R
R546 100R
R547 100R
BP
SOG
GP
VGACOM
RP
C534 10n/50V
C535 1.5n/50V
C536 10n/50V
C537 10n/50V
C538 10n/50V
VSYNC#
HSYNC#
R548 1k
R550 1k
RV523
RV524
R549 2k
R551 2k
VSYNC
HSYNC
VGA SYNC SLICER
<PIM>
MediaTek Inc.
No.1-2, Innovation Rd 1, SBIP, Hsin-Chu City 300
TEL: 03 567-0766 FAX: 03 578-7610
Title
<Title>
Size
C
Document Number
<Doc>
MT5301B_P3V1
Drawn
<Designer>
Rev
Date: Tuesday, October 19, 2010
Sheet 6 of 13

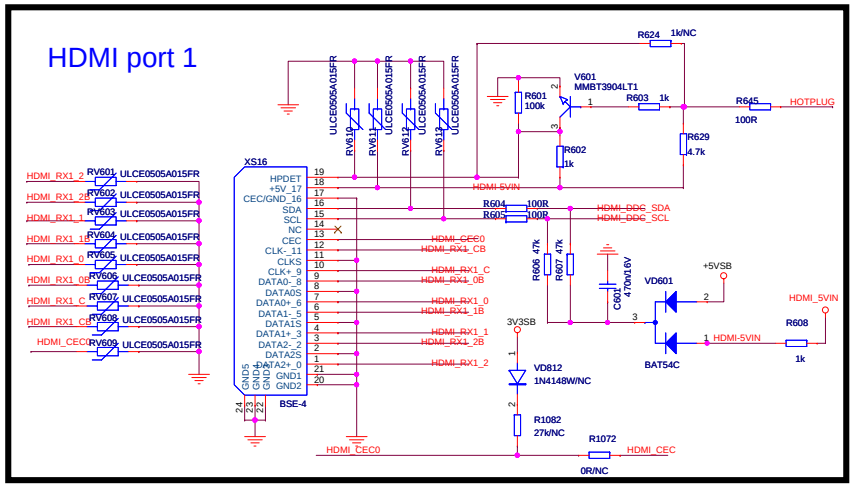

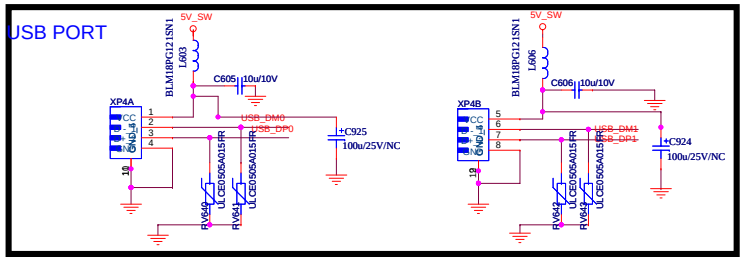

HDMI port 2

HDMI port 3

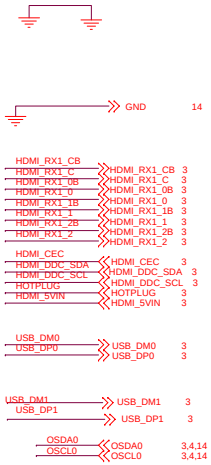

<PIM>

MediaTek Inc. No.1-2, Innovation Rd 1, SBIP, Hsin-Chu City 300 TEL: 03 567-0766 FAX: 03 578-7610

Title <TITLE>			
Size C	Document Number <Doc> MT5301B_P3V1	Drawn <designer>	Rev
Date: Wednesday, October 20, 2010		Sheet 7 of 13	

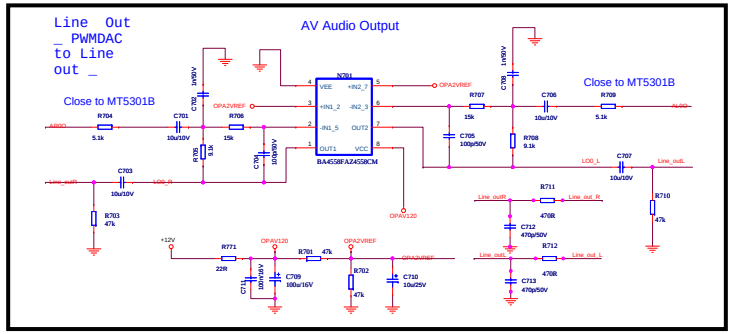

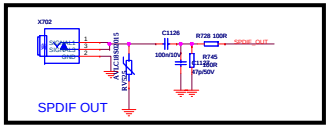

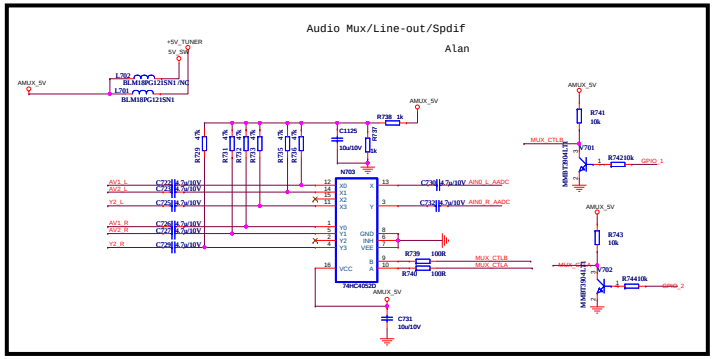

GND 14

AV1_L AV1_L 6
AV1_R AV1_R 6

AV2_L AV2_L 6
AV2_R AV2_R 6

Y1_L Y1_L 6
Y1_R Y1_R 6
Y2_L Y2_L 6
Y2_R Y2_R 6

AIND_R_AADC AIND_R_AADC 3
AIND_L_AADC AIND_L_AADC 3

ALOO ALOO 3
ARDO ARDO 3

MONITOR_OUT MONITOR_OUT 3,6

Line_out_R LINE_OUT_R 6
Line_out_L LINE_OUT_L 6

GPIO_1 GPIO_1 3
GPIO_2 GPIO_2 3
SPDIF_OUT SPDIF_OUT 3

<PIM>

MediaTek Inc.	No.1-2, Innovation Rd 1, SBIP, Hsin-Chu City 300 TEL: 03_567-0766 FAX: 03_578-7610		
Title	<Title>		
Size D	Document Number <DocMT5301B_P3V1	Drawn <Designer>	Rev
Date: Tuesday, September 14, 2010		Sheet 9 of 13	

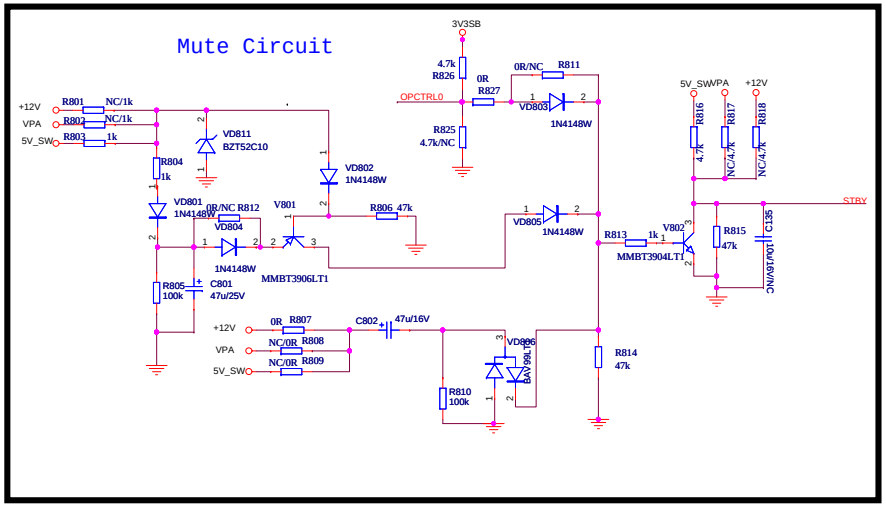

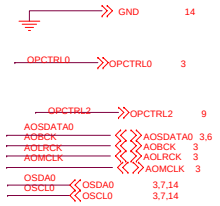

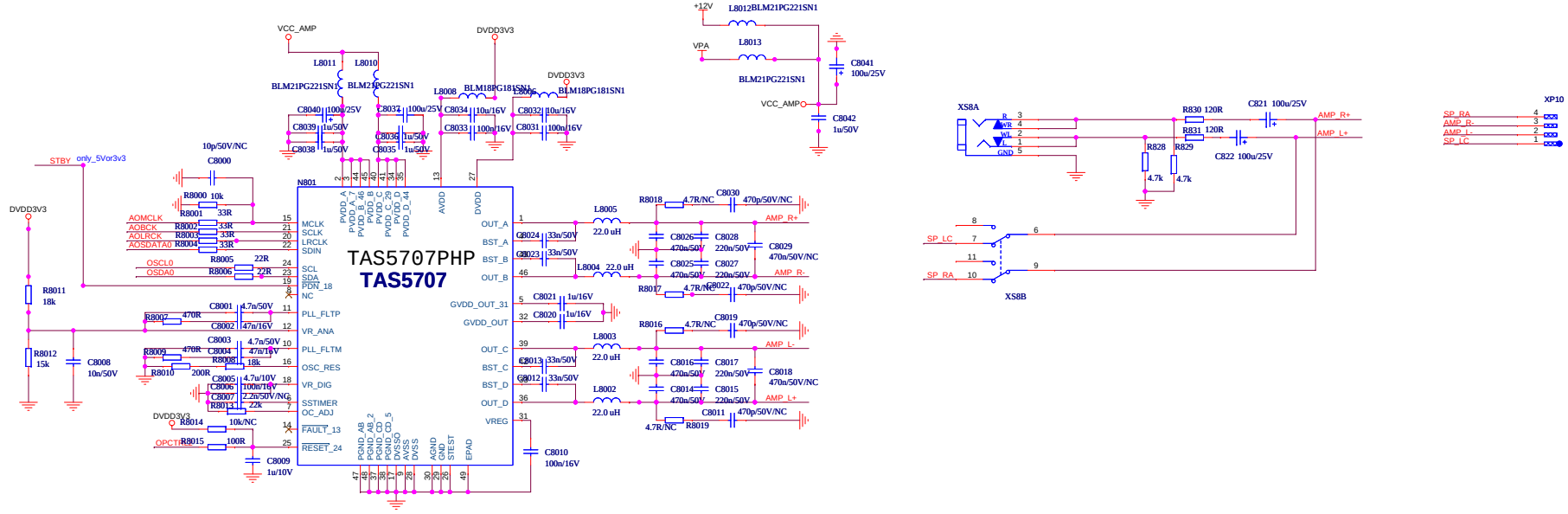

<PIM>

MediaTek Inc.	No.1-2, Innovation Rd 1, SBIP, Hsin-Chu City 300 TEL: 03 567-0766 FAX: 03 578-7610		
Title	Speaker/Headphone		
Size C	Document Number <DocNum> MT5301B_P3V1	Drawn <Designer>	Rev
Date: Wednesday, October 20, 2010		Sheet 9 of 13	

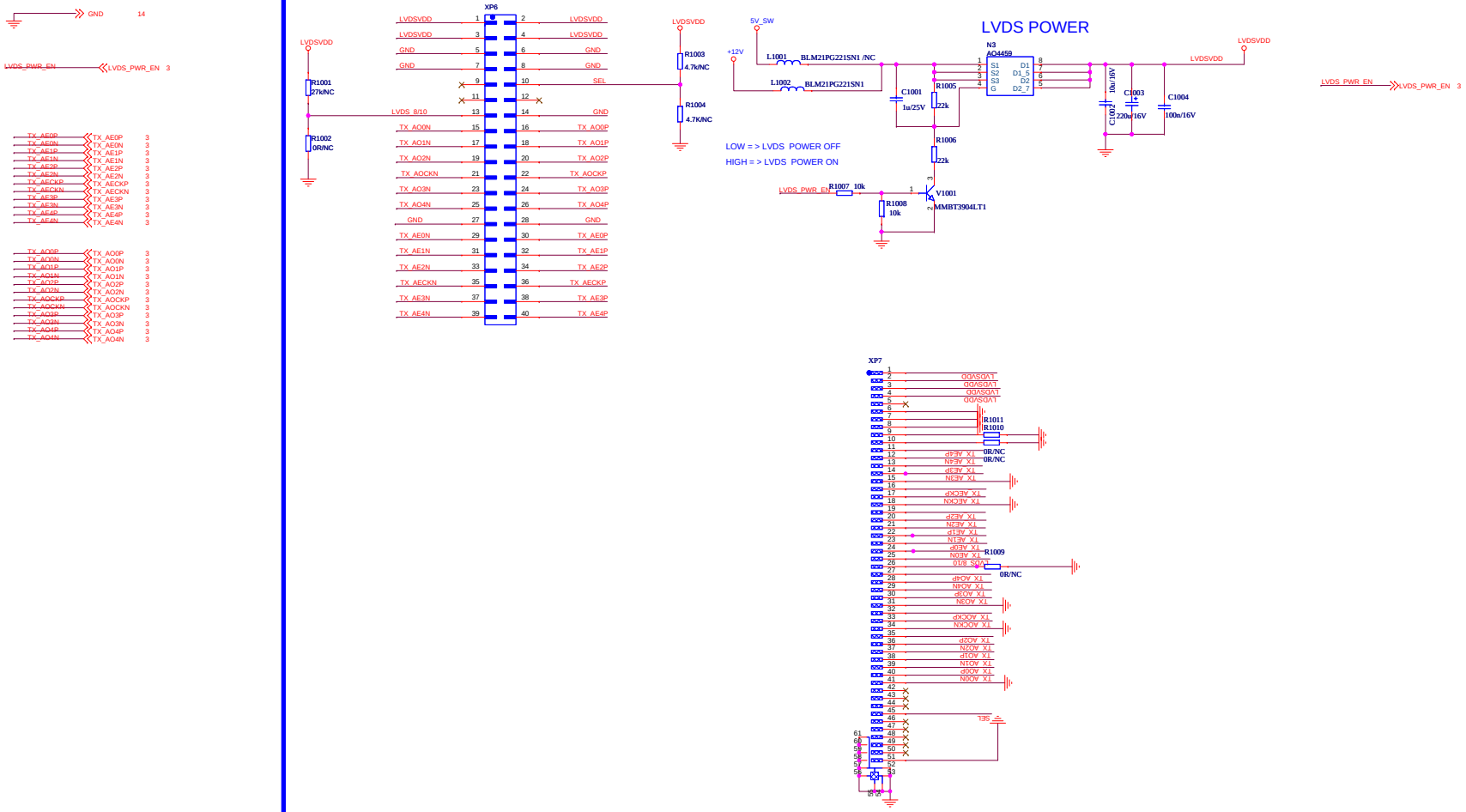

<PIM>

MediaTek Inc.	No.1-2, Innovation Rd 1, SBIP, Hsin-Chu City 300 TEL: 03 567-0766 FAX: 03 578-7610	
Title <Title>		
Size Custom	Document Number <DocNo> MT5301B_P3V1	Drawn <Designer> Rev
Date: Tuesday, September 14, 2010	Sheet 11 of 13	