维 修 手 册

品牌

Philips

机种

29PFL3330/T3
32PFL3330/T3
37PFL3330/T3
39PFL3330/T3
42PFL3330/T3

变更说明

版本	发布日期	变更说明	对外机种名	对内机种名
A00	Aug. 17.2012	首次发布	32PFL3330/T3	E32C11NDCTP1NNX
			42PFL3330/T3	E42C41NDCTP1NNX
A01	Sep.28.2012	增加新机种	39PFL3330/T3	E39C21NDCWP1NNX
A02	May.27.2013	增加新机种	37PFL3330/T3	E37C91NDCTPHNNX
			29PFL3330/T3	E29C21NDCTPHNNX

目录

1. 技术规格 ---------- 04

1.1 一般规格---------- 04

2. 操作说明 ---------- 05

2.1 遥控器---------- 05

2.2 控制面板---------- 07

2.3 背面和侧面信源接口---------- 07

2.4 菜单操作---------- 11

3. 拆卸流程图 ---------- 16

4. 工厂模式调整 ---------- 25

5. 线路图 ---------- 29

5.1 电源板---------- 29

5.2 IR 板---------- 36

5.3 按键板---------- 37

6. 软体烧录 SOP ---------- 38

7. 故障处理流程 ---------- 42

8. 主要 IC 管脚及内部框图---------- 47

9. BOM ----------55

1. 技术规格

1.1 一般规格

产品信息可能会随时变更，恕不另行通知。有关详细产品信息，请转到 www.philips.com/support

支持的显示分辨率

计算机格式

- 分辨率 - 刷新率:
  - 640 x 480 - 60Hz
  - 800 x 600 - 60Hz
  - 1024 x 768 - 60Hz
  - 1280 x 1024 - 60Hz
  - 1360 x 768 - 60Hz
  - 1920 x 1080 - 60Hz （29” 32”不支持）

视频格式

- 分辨率 - 刷新率:
  - 480i - 60Hz
  - 480p - 60Hz
  - 576i - 50Hz
  - 576p - 50Hz
  - 720p - 50Hz, 60Hz
  - 1080i - 50Hz, 60Hz
  - 1080p - 50Hz, 60Hz.

多媒体

- 支持的存储设备: USB（仅支持FAT或FAT 32 USB 存储设备。）
- 支持的多媒体文件格式:
  - 图像: JPEG
  - 音频：MP3
- 视频: MPEG 2/MPEG 4 , H.264 , WMV

声音功率

- 29PFL3330/T3: 8W x 2
- 32PFL3330/T3: 10W x 2
- 37PFL3330/T3: 10W x 2
- 39PFL3330/T3: 10W x 2
- 42PFL3330/T3: 10W x 2

固有分辨力

- 29PFL3330/T3: 1366 x 768
- 32PFL3330/T3: 1366 x 768
- 37PFL3330/T3: 1366 x 768
- 39PFL3330/T3: 1920 x 1080
- 42PFL3330/T3: 1920 x 1080

调谐器 / 接收 / 传输

- 天线输入: 75ohm同轴 (IEC75)
- 电视系统: PAL, D/K
- 视频播放: NTSC, PAL

遥控器

- 电池: 2 x AAA (LR03 类型)

电源

- 主电源: 200-240V, 50Hz
- 待机能耗: ≤ 0.5 W
- 环境温度：5到40摄氏度
- 功耗:
- 29PFL3330/T3: 42W
- 32PFL3330/T3: 60W
- 37PFL3330/T3: 70W
- 39PFL3330/T3: 84W
- 42PFL3330/T3: 91W

支持的电视机安装托架

要安装电视机，请购买飞利浦电视机安装托架或与 VESA 标准兼容的电视机托架。为避免损坏电缆和插口，请确保电视机背面至少保留 2.2 英寸或 5.5 厘米的间隙。

- 请按照随电视机安装托架一起提供的所有说明操作。Koninklijke Philips Electronics N.V. 对由于电视机安装不当而造成的事故、人身伤害或损失不负任何责任。

电视屏幕尺寸 (英寸)	需要的点距 (mm)	需要的安装螺钉
29	100 x 100	4 x M4 (建议长度14mm)
32	200 x 100	4 x M6 (建议长度18mm)
37	200 x 200	4 x M6 (建议长度18mm)
39	200 x 200	4 x M6 (建议长度18mm)
42	400 x 400	4 x M6 (建议长度18mm)

产品规格

设计和规格若有变更，恕不另行通知。

29PFL3330/T3

- 不带电视支架
- 尺寸(宽x高x深): 662.2 x 409.3 x 57.7 (mm)
- 重量: 5.8 kg
- 带电视支架
- 尺寸(宽x高x深): 662.2 x469.7 x220 (mm)
- 重量: 7.62 kg

32PFL3330/T3

- 不带电视支架
  - 尺寸(宽x高x深): 732.6 x 454.6 x 75.0 (mm)
  - 重量: 6.6 kg
- 带电视支架
  - 尺寸(宽x高x深): 732.6 x 503.1 x 220 (mm)
  - 重量: 8.5 kg

37PFL3330/T3

- 不带电视支架
- 尺寸(宽x高x深): 842.8 x 516.5 x 66.0 (mm)
- 重量: 8.92 kg
- 带电视支架
- 尺寸(宽x高x深): 842.8 x 576.2 x 236 (mm)
- 重量: 11.16 kg

39PFL3330/T3

- 不带电视支架
  - 尺寸(宽x高x深): 885.9 x 539.8 x 75.5 (mm)
  - 重量: 9.6 kg
- 带电视支架
  - 尺寸(宽x高x深): 885.9 x 588.3 x 220 (mm)
  - 重量: 12.5 kg

42PFL3330/T3

- 不带电视支架
  - 尺寸(宽x高x深): 967.6 x 588.1 x 80.5 (mm)
  - 重量: 11.2 kg
- 带电视支架
  - 尺寸(宽x高x深): 967.6 x 636.6 x 220 (mm)
- 重量: 14.1 kg

2. 操作说明

2.1 遥控器

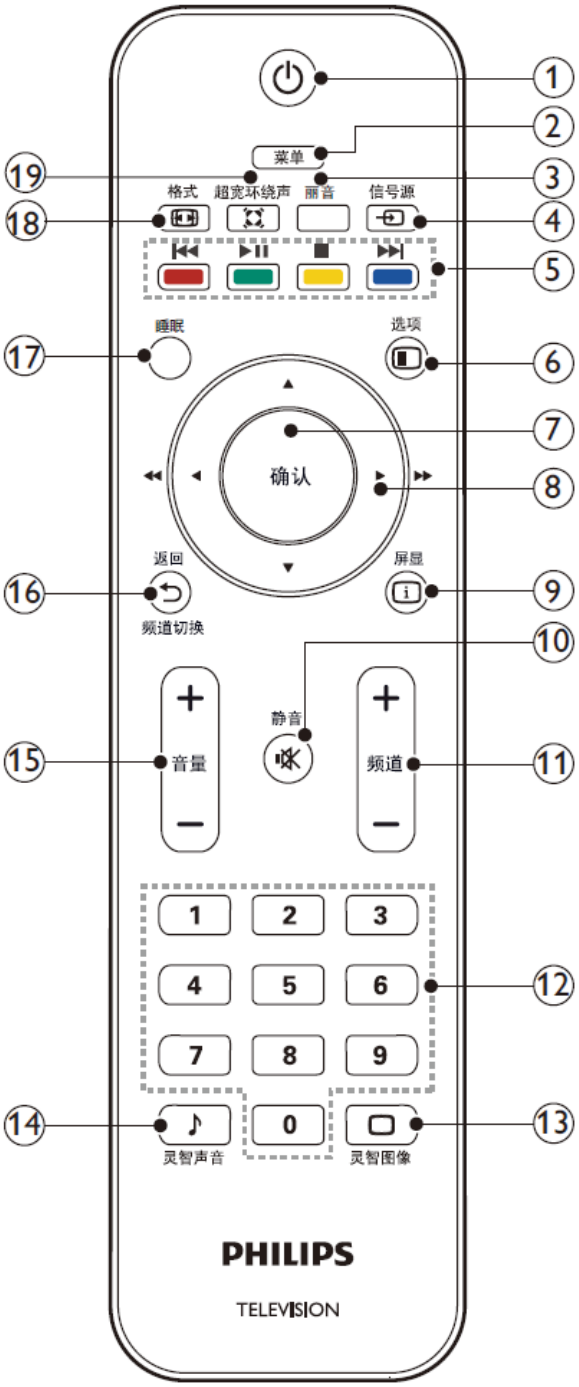

① ⏻ (待机-开机)
- 在电视机打开时将其切换到待机状态。
- 在电视机处于待机状态时打开电视。

② 菜单
打开或关闭主菜单。

③ 丽音
1530系列机型不支持丽音功能。

④ (信号源)
选择已连接的设备。

⑤ ⏮ ▶II ■ ⏭
即“上一首 开始 / 暂停 结束 下一首”。

⑥ (选项)
使用此按键和0~9选择1~3位数频道。

⑦ 确认
按此按键确认所选项目或设置。在USB播放音乐时该键可执行播放/暂停功能。

⑧ ▲▼◀▶ (导航按钮)
按上下左右可选中可用的选项或调整OSD菜单设置。

注
- 在USB播放音乐/图片时不作为快进/快退功能键使用。

⑨ (屏显)
显示节目信息。

注
- 在USB播放图片时，按此键可以开始幻灯片播放。

⑩ (静音)
静音或恢复音量。

⑪ 频道 +/-
按此键切换频道，要快速切换频道请持续按住+/-其中任意一个按键。

⑫ 0-9 (数字按钮)
选择频道或设置。

⑬ (灵智图像)
重复按此键可循环选择可用的图像模式：标准、省电模式、电影、用户、鲜艳。

⑭ ♪ (灵智声音)
重复按此键可循环选择可用的声音模式：标准、音乐、对白、用户。

⑮ 音量 +/-
增加或降低音量。

⑯ (返回 / 频道切换)
返回上一个频道或者信号源。

⑰ 睡眠
按此键可以设置电视在多长时间后进入待机状态。（电脑/USB模式下此键无作用）。

⑱ (格式)
选择画面格式。

注
- 在USB幻灯片放映时，按此键可对图片进行缩放操作。

⑲ (超宽环绕声)
启用立体声源的环绕立体声。 启用单声源的空间声模式。

2.2 控制面板

控制面板

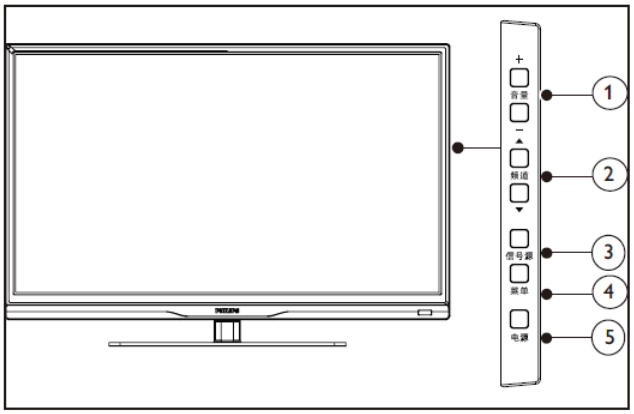

① 音量+/-: 提高和降低音量。

② 频道▲/▼: 切换到上一个或下一个频道。

③ 信号源: 按此键显示各种信号源列表。

④ 菜单: 打开或关闭主菜单。

⑤ 电源: 打开或关闭产品电源。必须拔下电源插头，本产品才会完全断电。

2.3 背面和侧面信源接口

底部接口

① HDMI
Blu-ray播放机等高清数字设备中的数字音频和视频输入。

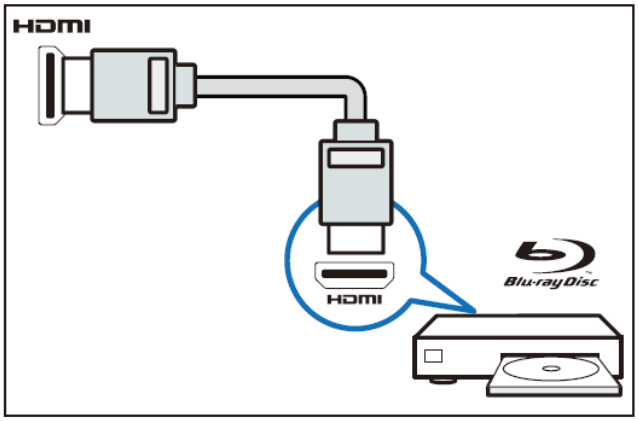

② 计算机中的音频和视频输入

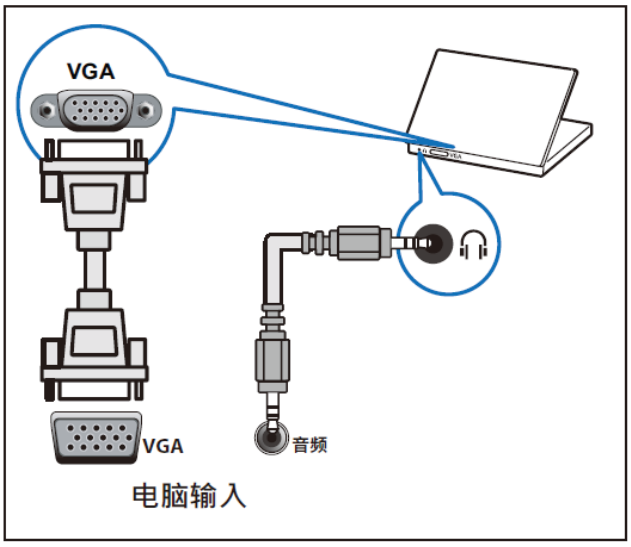

③ SERV. U
仅供专业维修人员使用。

④ 分量输入(视频/Y Pb Pr 音频 左/右)
（其中音频输入接口在侧面）
DVD播放机或游戏机等模拟或数字设备中的模拟音频视频输入。

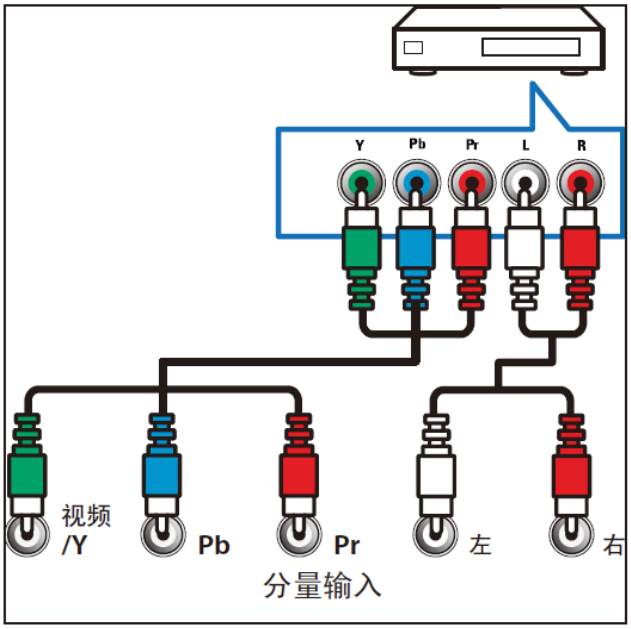

注: 音频输入接口在侧面

⑤ AV输入(AV输入与分量输入Y共用,AV与分量输入音频接口共用)
DVD播放机或游戏机等模拟或数字设备中的模拟音频视频输入。

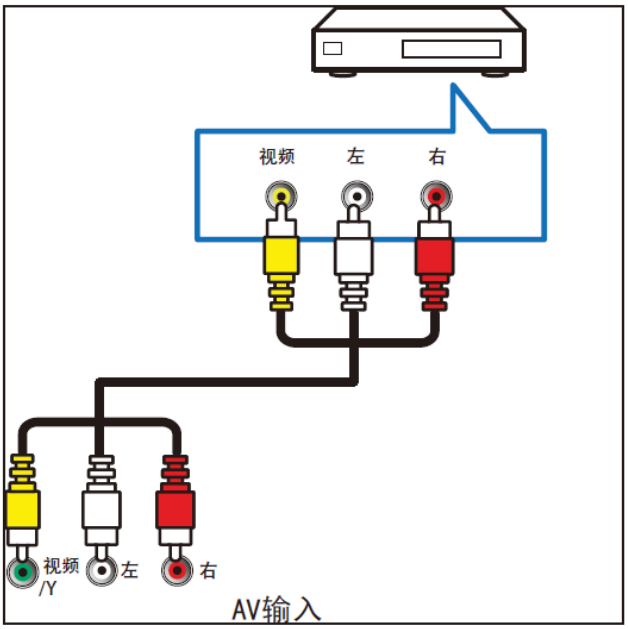

侧面接口

① USB
USB 存储设备中的数据输入。

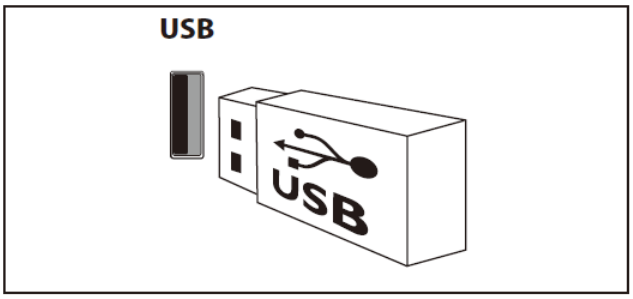

② 耳机
立体声音频输出到耳机。

注

- 耳机插入时，电视扬声器会自动静音。

③ 天线/有线电视
天线、有线或卫星的信号输入。

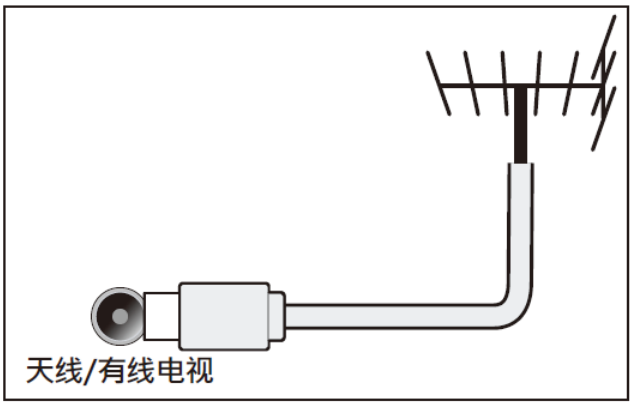

④ 视频输出
VCR 等模拟设备中的复合视频输出。

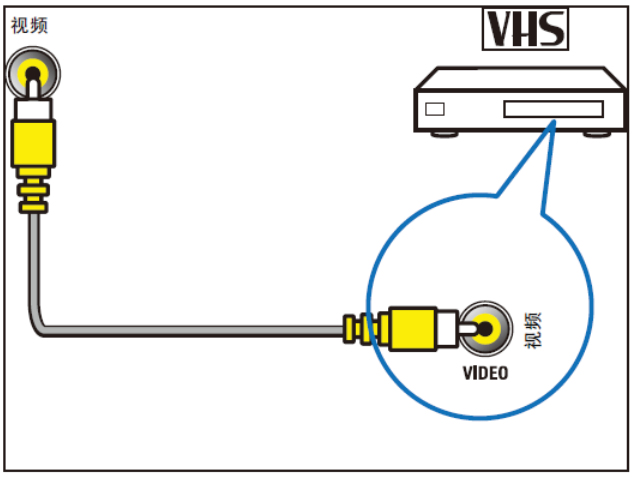

⑤ AV/分量音频输入 左/右
视频上所连模拟设备中的音频输入。

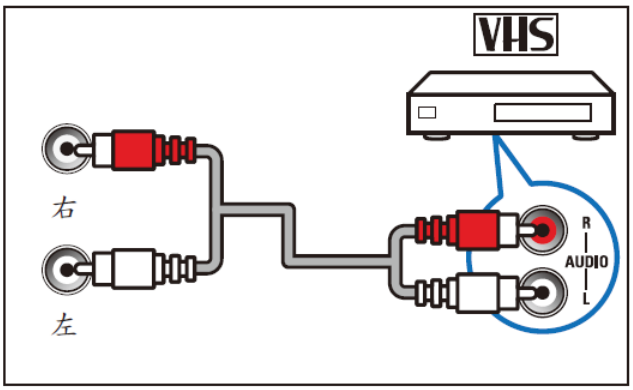

连接到计算机

将计算机连接到电视之前

- 将计算机上的屏幕刷新率设置为 60Hz。
- 在计算机上选择一个支持的屏幕分辨率。

通过以下一种接口连接计算机:

注

- 通过 DVI或 VGA 连接需要额外一条音频线。

- HDMI 线

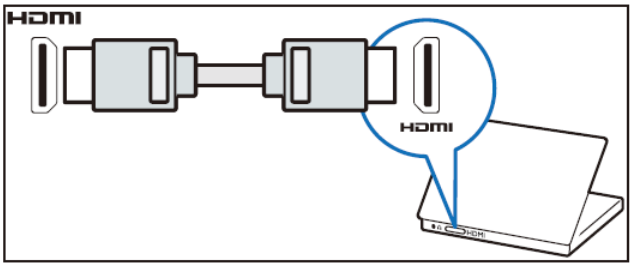

- DVI-HDMI线

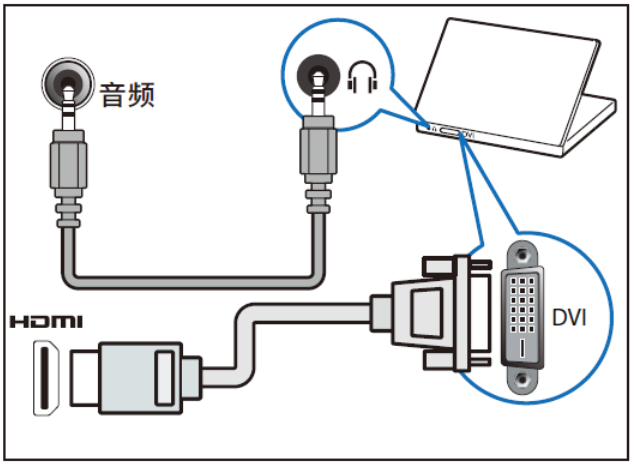

- HDMI 线和 HDMI-DVI 适配器

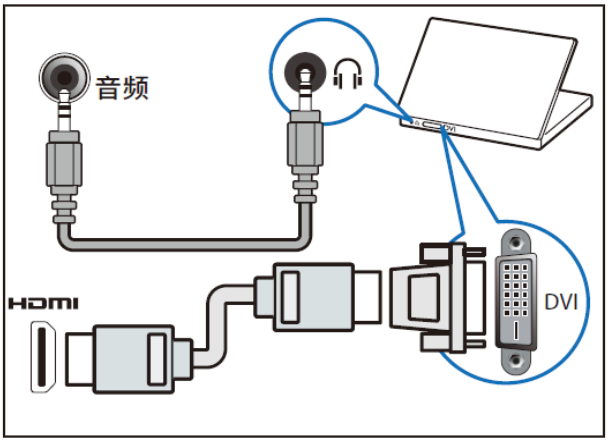

- VGA线

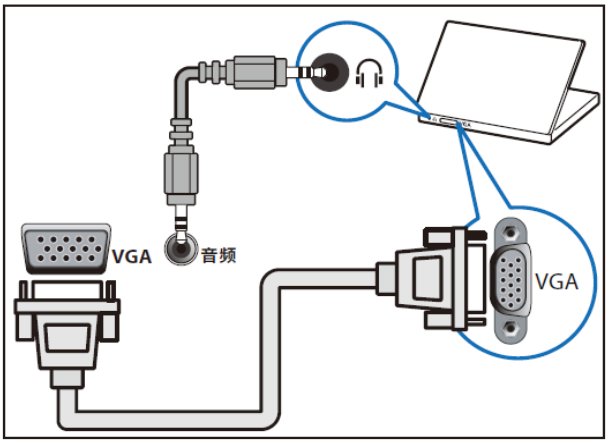

使用 Philips EasyLink

充分利用您的 Philips EasyLink HDMI-CEC 兼容设备可增强控制功能而达到最大效益。透过 HDMI 接口连接的 HDMI-CEC 兼容设备可以由电视遥控器进行控制。
要启用 Philips EasyLink，您需要:

- 透过HDMI接口连接两个以上的 HDMI-CEC兼容设备
- 确认每个HDMI-CEC兼容设备都正常运作
- 切换到 EasyLink

注

- EasyLink 兼容设备必须已经打开并被选作信号源。
- Philips 不保证 100% 与所有 HDMI CEC 设备实现互操作性。

打开或关闭 EasyLink

启用HDMI-CEC兼容设备后，电视会自动打开并切换到正确的信号源。

注

- 如果您不打算使用 Philips EasyLink，请不要启用它。

1 按菜单。
2 选择 [设置] > [设置] > [Easylink] 。
3 选择 [关闭] 或是 [开启]，然后按确认。

使用快捷播放

1 启用 EasyLink 后，在设备上按下播放。
↳ 电视会自动切换到正确的信号源。

使用快捷待机

1 按遥控器上的 ⏻(待机–开机)。
↳ 电视及所有连接的HDMI设备将会切换到待机。

2.4 菜单操作

访问电视机菜单

菜单可帮助您设定频道、更改画面和声音设置以及访问其它功能。

1 按 菜单 。

↳菜单开启。

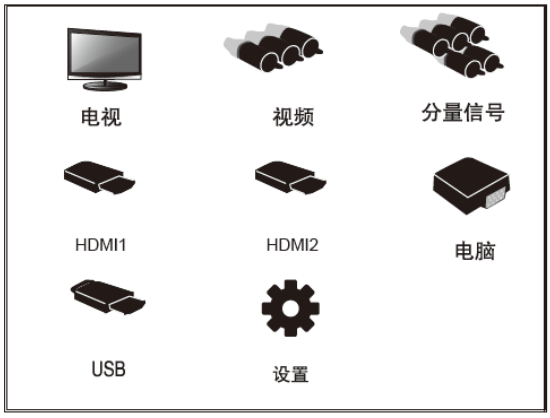

2 选择**设置**。

3 按 ▲▼◀▶ 从下列选项中选择:

- [图像] / [声音] / [设置] / [搜台]: (此设置只在电视模式中可用。) / [电脑]: (此设置只在电脑模式中可用。)

4 按确认选择。

5 按**菜单**退出。

更改画面和声音设置

更改画面和声音设置以适合您的喜好。 您可以应用预定义的设置，也可以手动更改设置。

画面设置

1 按 **菜单**，选择**设置**。

↳将显示 [图像] 菜单。

2 按 ▲▼◀▶ 从以下设置中选择并调整:

- [灵智影像]:
  - [鲜艳]: 增强的画面对比度和清晰度。
  - [标准]: 标准画面设置。建议用于家庭娱乐。
  - [省电模式]: 减少背光强度以节约电能。
  - [电影]: 用于观看电影内容。最适合在剧院类环境观看。
  - [用户]: 提供用户自行设定的模式。
- [对比度]: 调节亮区域的强度，暗区域保持不变 (仅在用户模式显示)。
- [亮度]: 调节暗区域的强度和细节 (仅在用户模式显示)。
- [色彩]: 调节颜色饱和度 (仅在用户模式显示)。
- [色调]: 调节绿色度 (NTSC制式下才出现此选项)。
- [清晰度]: 调节图像清晰度 (仅在用户模式显示)。
- [降噪]: 过滤和消除图像中的杂信号 (仅在用户模式显示)。
- [色温]: 白色偏蓝色调 ([冷色])、白色偏红色调 ([暖色]) 、白色色调 ([标准])或在电脑模式时用户可自行定义白色色调。
- [画面比例]: 一般信号源有标准、16:9、放大1、放大2模式; HDMI信源下有标准、16:9、放大1、放大2、1: 1模式; 电脑VGA信源下有: 标准、16:9模式。画面比例也可以用遥控器的**缩放**实现。

更改画面比例

1 按**格式**。

↳将显示画面格式信息。

↳按**格式**将改变画面格式。

画面格式摘要

可对下列画面设置进行配置。

注

- 根据画面信号源格式的不同，一些画面设置不可用。

	[标准]：显示经典的标准格式。
	[16:9]：将经典的标准格式比例调整为宽屏。
	[放大1]：水平延展的宽屏图像显示。使用此模式图像的左右两边会被部分切除。
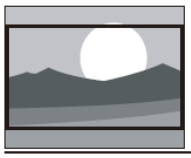	[放大2]：将标准格式比例调整为宽屏。（PC模式只有标准和宽屏）。
	[1:1]：适用于HDMI连接电脑的模式，会将电脑信号进行全屏显示，并达到最佳显示效果。

手动调整声音设置

1 按 **菜单**，选择**设置**。

2 按 ▲▼◀▶ 选择 [声音]。

↳将显示 [声音] 菜单。

3 按 ▲▼◀▶ 进行选择和调整：

- [灵智声音]：声音模式也可以通过按遥控器上的音质进行调整。
  - [用户]：提供用户自行设定所有音效参数的合适数值。
  - [标准]：在高、中、低音各音域均有平衡出色的音质表现。
  - [音乐]：增强高音和低音，在聆听钢琴及管弦乐器等演奏时可表现出清亮透彻的纯净音质。
  - [对白]：增强人声频谱所涵括的音域表现，适合于收看新闻及艺文性节目。
- [低音]：调节低音级别（仅在用户模式显示）。
- [高音]：调节高音级别（仅在用户模式显示）。
- [平衡]：调节左右扬声器的平衡。
- [AVL]：启动自动音量调整。
- [虚拟环绕]：设置虚拟环绕：启动或关闭。

功能设置

1 按 **菜单**，选择**设置**。

2 按 ▲▼◀▶ 选择 [设置]。

↳将显示 [设置] 菜单。

3 按 ▲▼◀▶ 进行选择和调整：

- [菜单语言]：调整电视机的语言设置。
- [菜单显示时间]：设定菜单显示的时间长度。
- [睡眠时间]：设置闲置多少分钟后电视机会自动进入待机状态。使用遥控器上的 睡眠 按钮可以设置它。可设置为关/10/20/30/60/90/120/180分钟。（电脑模式/USB下此按键无作用）。
- [高级对比度]：将对比度设置到最高。(PC模式下没有高级对比度选项)。
- [动态对比度]：对比度将因画面明暗而改变。
- [背光控制]：调节屏幕亮度（当背光控制值偏低时，开机时可能看到瞬间白闪，此为正常现象。动态对比度为开时，该项隐藏）。
- [童锁]：当童锁为开时：
  - 进入搜台菜单时需要输入四位数字密码。
  - 收看被锁定的频道需要输入四位数字密码。

- 进入童锁子菜单需要输入四位数字密码。在开机状态，只需要输入一次正确的密码就可以解开所有的密码。
- 童锁初始用户密码0000，用户可自行修改密码；为了防止用户忘记密码，特设定超级密码3448用于进入童锁设定用户密码。注：超级密码不作为用户密码使用，只能用于设定用户密码（电视信源才有此项）。

- [密码设置]：输入正确密码后可以更改密码。
- [EasyLink]：设置EasyLink 兼容设备关或开。
- [系统重置]：将当前设置重置为默认值。(密码设置除外)。

使用定时器

您可以设置定时器，以便在指定的时间将电视机切换到待机模式。

提示

- 在使用计时器前，请先设置睡眠时间。

电视机自动切换到待机模式（睡眠定时）

睡眠定时会在预定义的一段时间后将电视机切换为待机模式。

提示

- 您可以提前关闭电视机，或在倒计时期间重新设定睡眠定时器。

1 按 菜单，选择设置。
2 按 ▲▼◀▶ 选择 [设置] > [睡眠时间]。
↳将显示 [睡眠时间] 菜单。
3 按 ▲▼ 以设置睡眠时间。
↳睡眠定时器最多可以设置为180 分钟。

使用童锁

通过锁定电视机控制器，您可以禁止儿童观看特定的节目或频道。

开启或关闭童锁功能

1 按 菜单，选择设置。
2 按 ▲▼◀▶ 选择 [设置] > [童锁]。
3 用 数字按钮 输入密码。
↳可以开启或关闭童锁功能。

提示

- 如果您忘记了密码，请输入“3448”进入童锁修改密码。

锁定或解除锁定一个或多个频道

1 按 菜单，选择设置。
2 按 ▲▼◀▶ 选择 [搜台] > [频道锁定]。
3 选择频道。按 确认锁定或解除锁定的频道。
4 重复此过程以锁定或解锁多个频道。

注

- 关闭电视机然后再次打开，以使更改生效。
- 如果您访问锁定的频道，则将提示您输入密码。

电脑设置

1 按 菜单，选择设置。
2 按 ▲▼◀▶ 选择 [电脑]。
↳将显示 [电脑] 菜单。
3 按 ▲▼◀▶ 进行选择和调整：
- [自动调整]：自动同步电脑分辨率调整以适合全屏幕显示。
- [水平位置]：调整水平位置。

- [垂直位置]：调整垂直位置。
- [时钟]：调整电脑信号的时钟频率。
- [相位]：调整电脑信号的相位频率。

提示

- 电脑菜单只有在电脑输入的时候才可以看到。

从USB存储设备中查看照片和播放音乐及影片

USB支持的视频格式：

- 支持的存储设备：USB（仅支持FAT或FAT 32 USB存储设备。）
- 支持的多媒体文件格式：
  - 图像：JPEG
  - 音频：MP3
  - 视频：MPEG 2/MPEG 4，H.264，WMV

注意

- 对于不支持USB存储设备，Philips不承担任何责任，同时，对于该设备中的数据损坏或丢失也概不负责。

从连接的USB储存设备中观看照片与播放音乐及影片

1 打开电视。
2 连接USB储存设备到电视侧面的USB插槽。
3 按菜单。
4 选择 [USB]，然后按确认。
↳ USB浏览页开启。

观看照片

1 在USB浏览页中选取 [图片]，然后按确认。
2 选取一张照片或是资料夹，然后按确认。该照片将会被放大至全荧幕。
- 按 ⏮ ⏭ 观看上一张或下一张照片。

观看照片的幻灯片

1 选取一张照片或是资料夹，然后按确认。该照片将会被放大至全荧幕。
↳ 从被选取的照片开始播放幻灯片。
2 按以下的按钮控制照片播放：
- 确认：播放/暂停播放
- ⏮/⏭ ：观看上一张或下一张照片。

更改播放幻灯片的设定

1 在播放幻灯片时，按 确认。
↳ 显示幻灯片的选项目录。
2 选择下列其中一个项目后按确认。
- [过场效果]：设定由上至下、由下至上、由左至右、由右至左、随机、无。
- [播放时间]：设定图片播放时间。
- [旋转]：旋转照片。
- [信息]：显示图片名称、分辨率、大小。

聆听音乐

1 在USB浏览页中选择 [音乐]，然后按确认。
2 选择一个音乐曲目或专辑，然后按确认播放。

更改播放音乐的设定

播放音乐时，按 确认，并选取以下其中一项设定后按确认。
- [循环模式]：选择无、单曲、全部、随机播放音乐。
- [背景音乐]：选择背景音乐开或关。
- [音效]：选择流行、摇滚、古典、舞曲、音乐、用户播放音乐。
- [信息]：显示歌曲名称、歌手名、大小。

观看影片

1 在USB浏览页中选择 [电影]，然后按确认。
2 按确认播放影片。
3 按以下的按钮控制影片播放：
   - 确认：播放/暂停播放
   - ◀ / ▶：向前或向后寻找。

更改播放影片的设定

播放影片时，按 确认，并选取以下其中一项设定后按确认。
- [循环模式]：选择无、单曲、全部、随机播放影片。
- [信息]：显示档案资料。

移除USB储存装置

注意

- 请依照下列步骤移除以预防损坏USB储存装置。

1 按菜单切换离开USB浏览页。
2 等候约五秒钟后再移除USB储存装置。

更新电视软件

Philips 不断努力改进其产品，我们建议您在推出更新时对您的电视软件进行更新。请访问 www.philips.com/support 网站查询是否有更新。

将电视机重置为出厂设置

您可以恢复电视机的默认画面和声音设置。 频道安装设定保持不变。

1 按 菜单，选择设置。
2 按▲▼◀▶选择 [设置] > [系统重置] 。
   ↳将显示 [系统重置] 菜单。
3 按 确认进入重置菜单，选择 [是] 按确认进入重置
4 按 菜单 退出。

3. 拆卸流程图

32PFL3330/T3

第一步：旋开红色标示的螺丝移除支架组件。

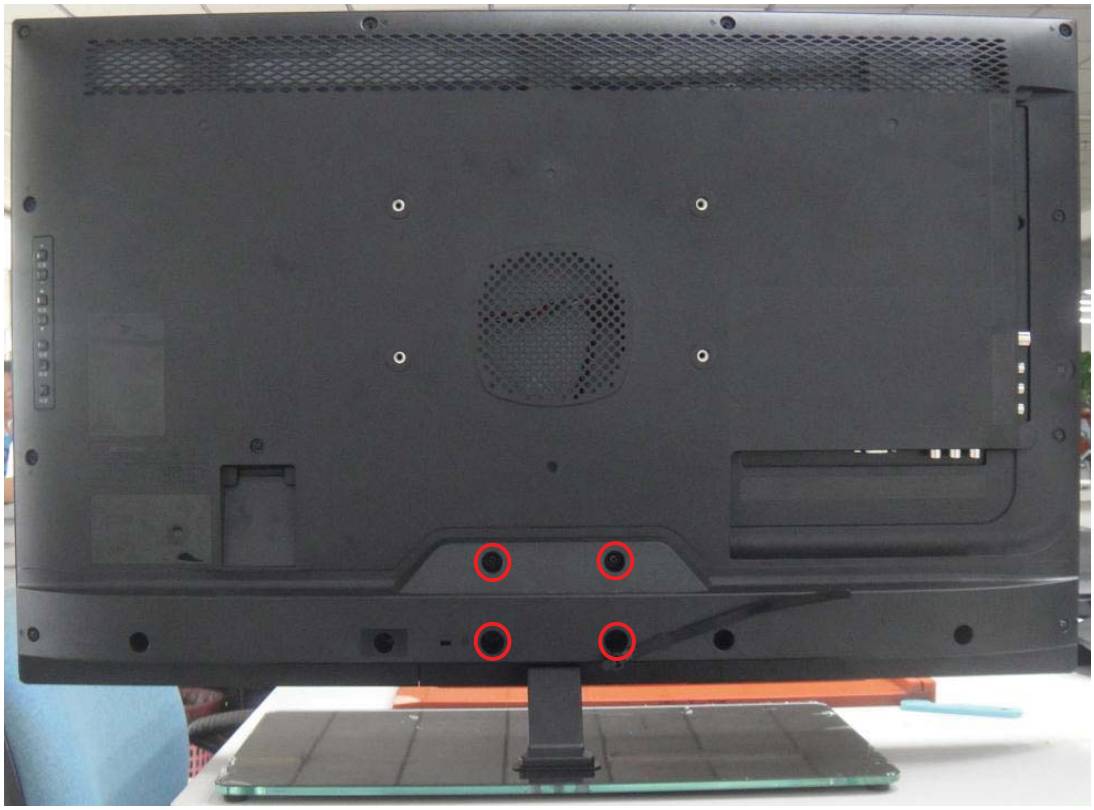

第二步：旋开红色标示的螺丝移除后壳。

第三步：拔掉黄色标示的PIN,旋开红色标识的螺丝移除板子和喇叭。

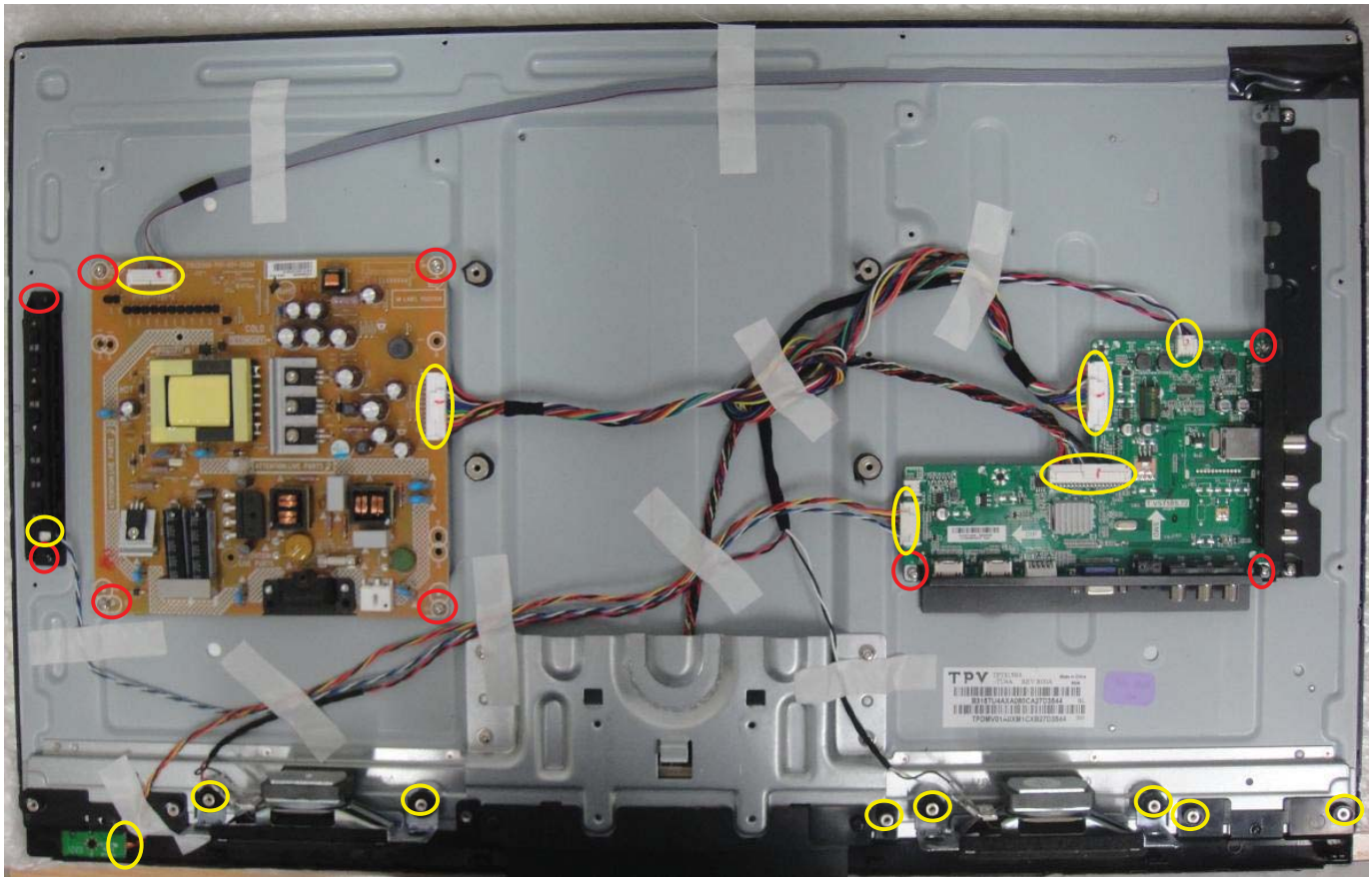

第四步：旋开红色标示的螺丝移除铁件。

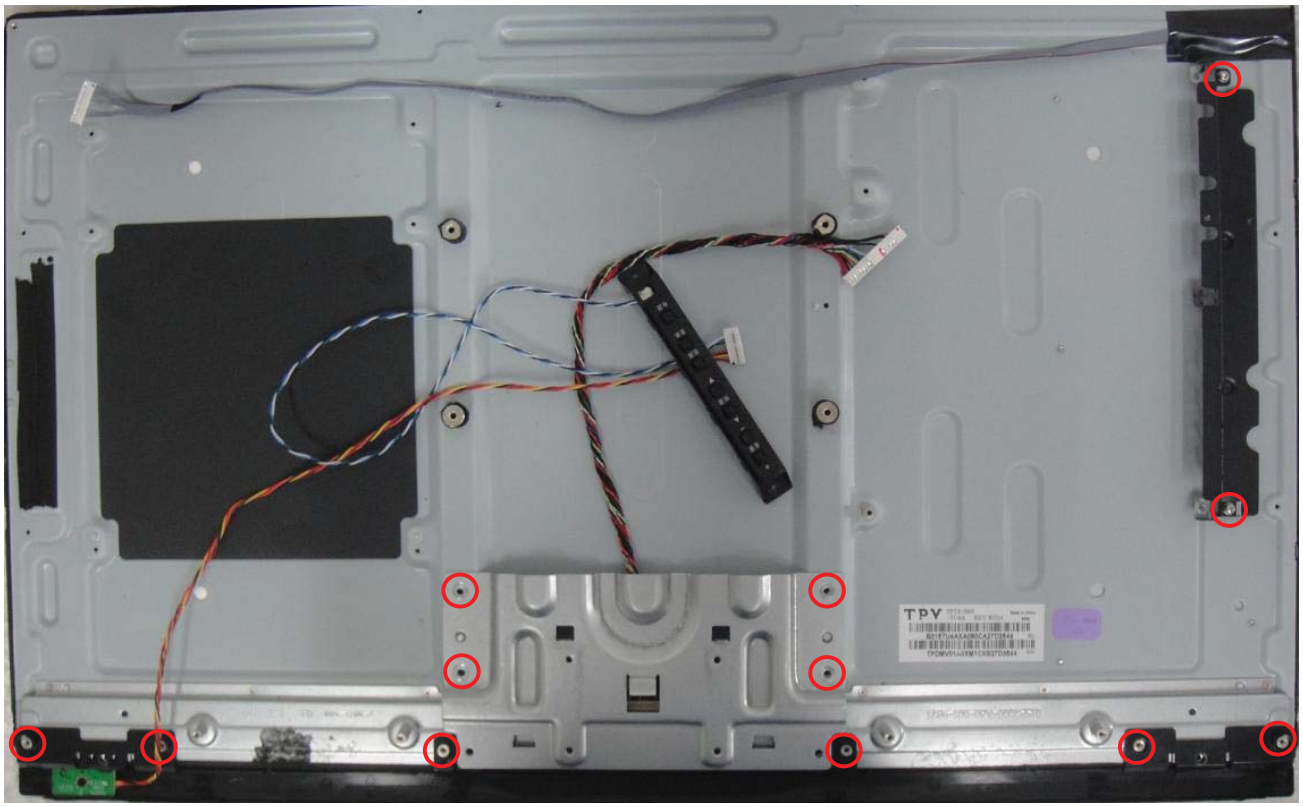

第五步：移除DECO，拔除LVDS线。

37PFL3330/T3

第一步：旋开红色标示的螺丝移除支架组件。

第二步：旋开红色标示的螺丝移除后壳。

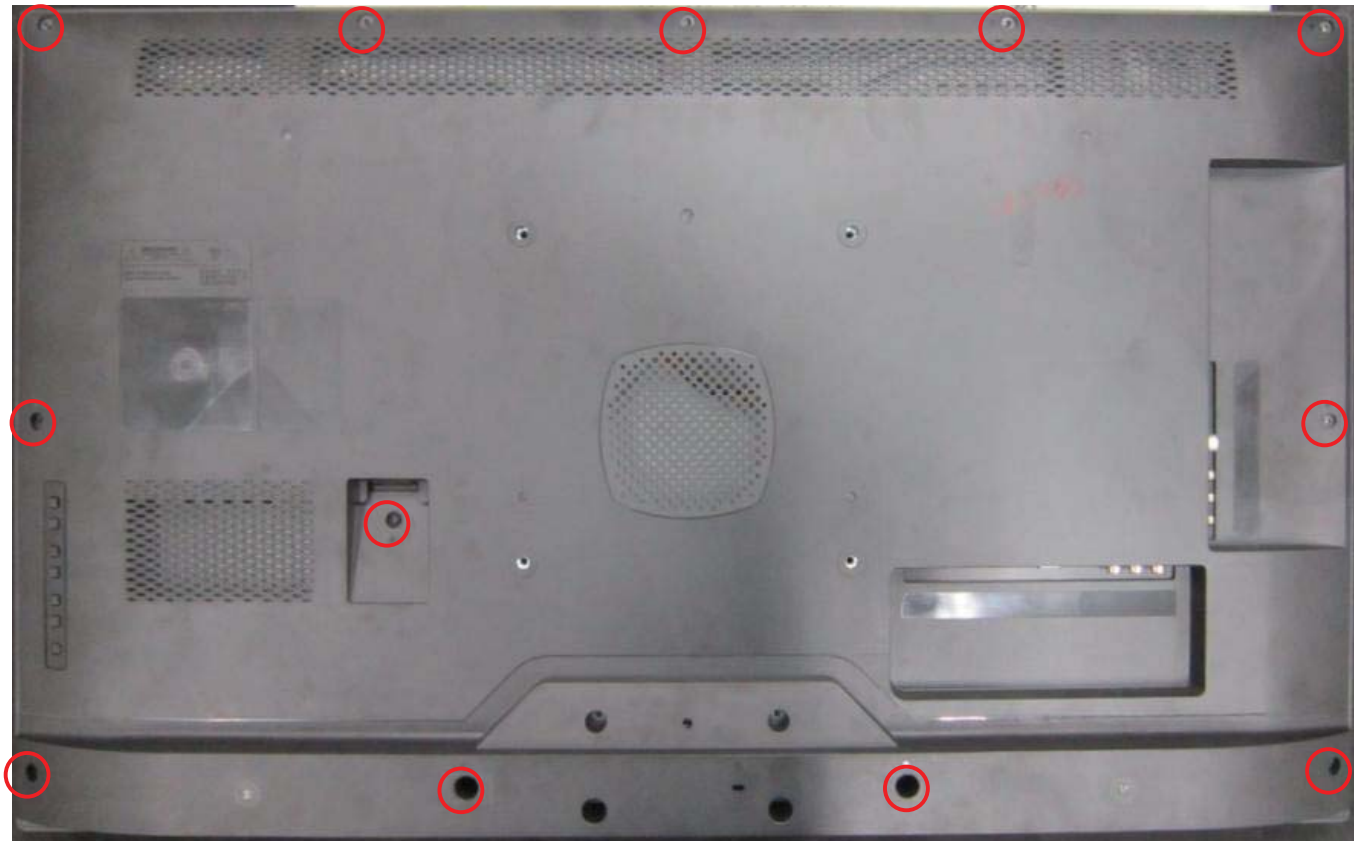

第三步：拔掉黄色标示的 PIN,旋开红色标识的螺丝移除板子和喇叭。

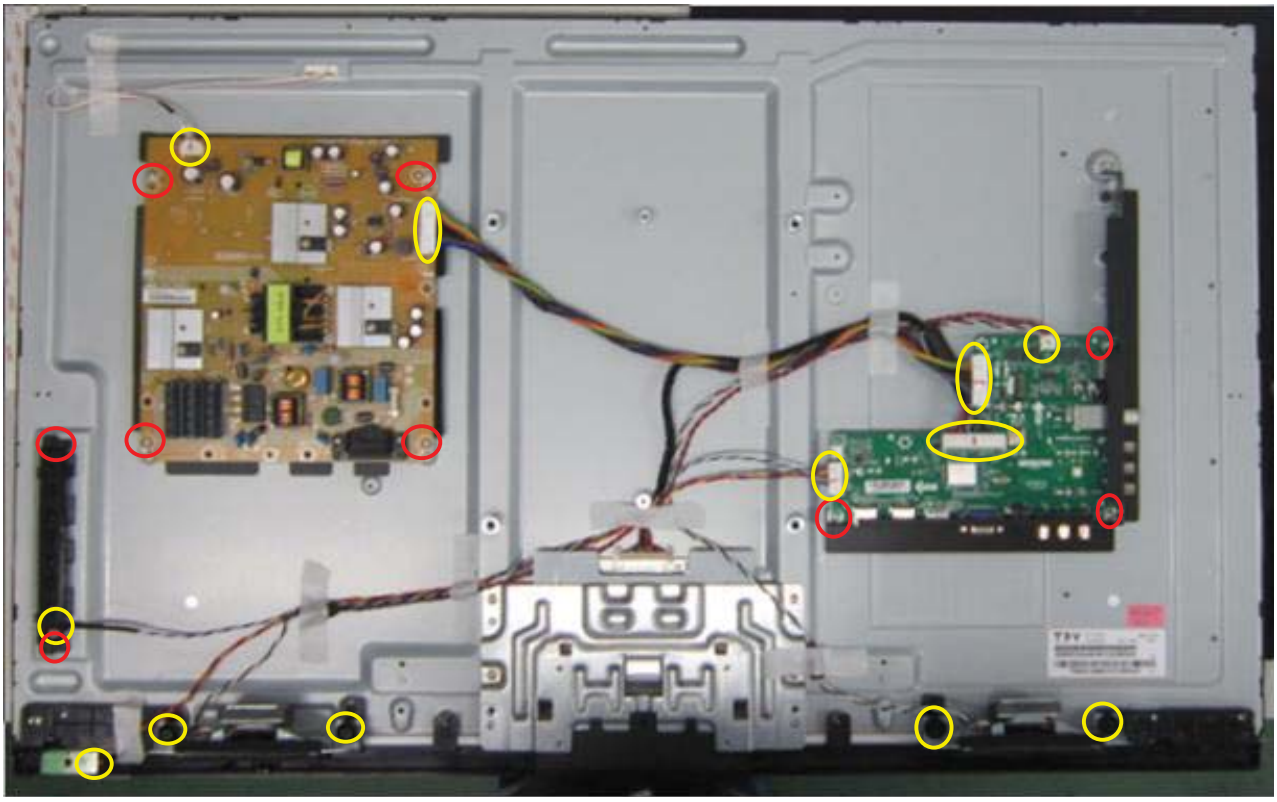

第四步：旋开红色标示的螺丝移除铁件和喇叭。

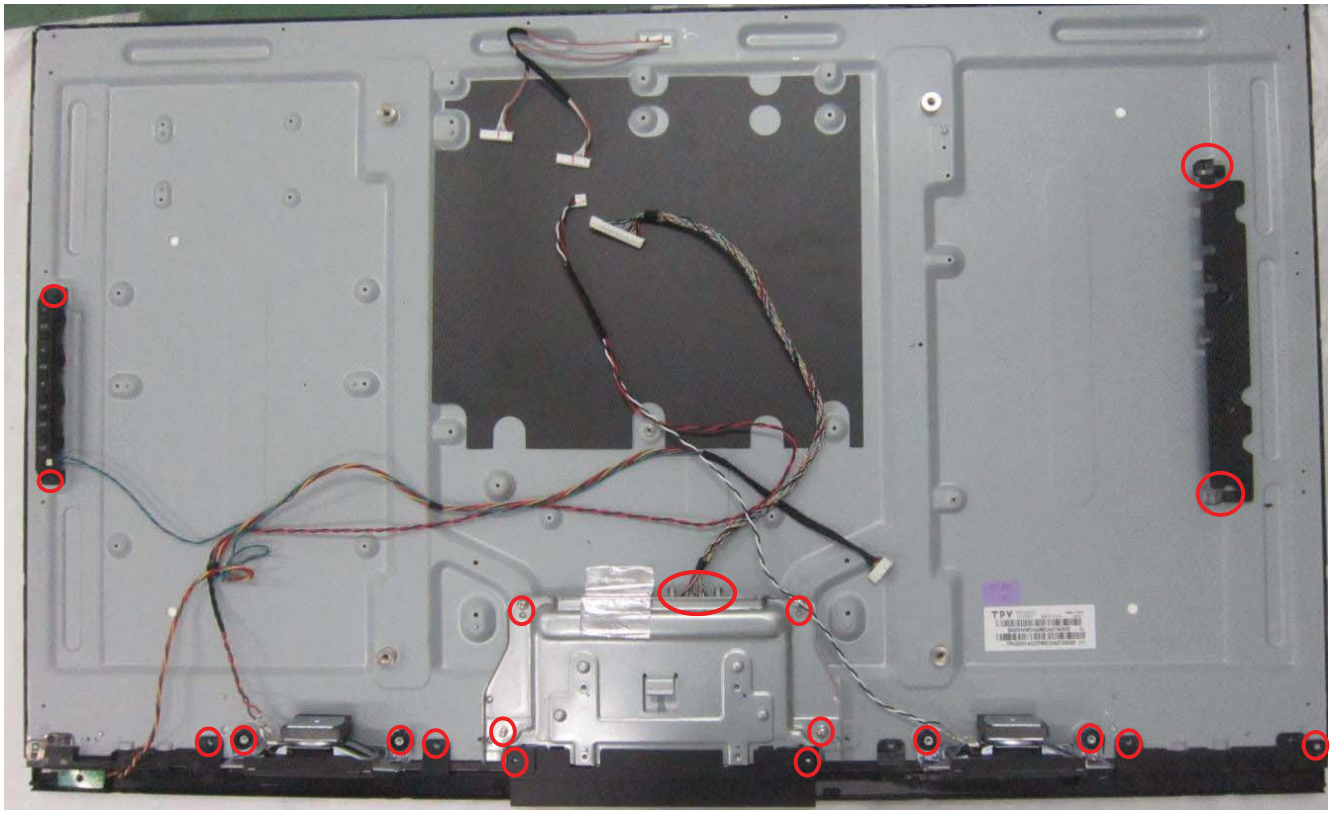

第五步：移除 DECO。

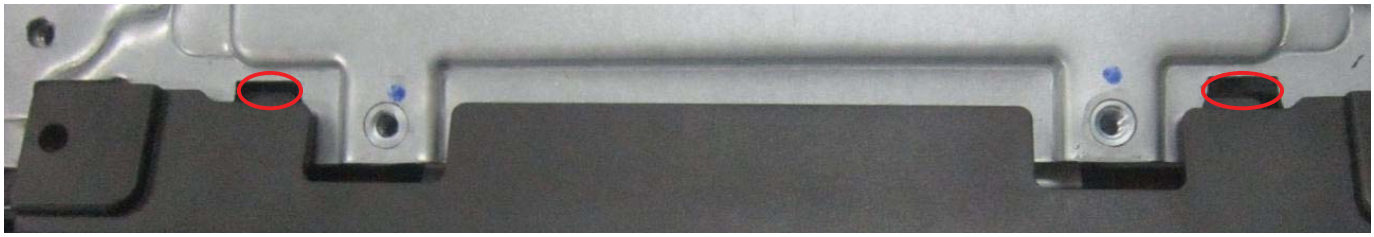

42PFL3330/T3

第一步：旋开红色标示的螺丝移除支架组件。

第二步：旋开红色标示的螺丝移除后壳。

第三步：拔掉黄色标示的 PIN,旋开红色标识的螺丝移除板子。

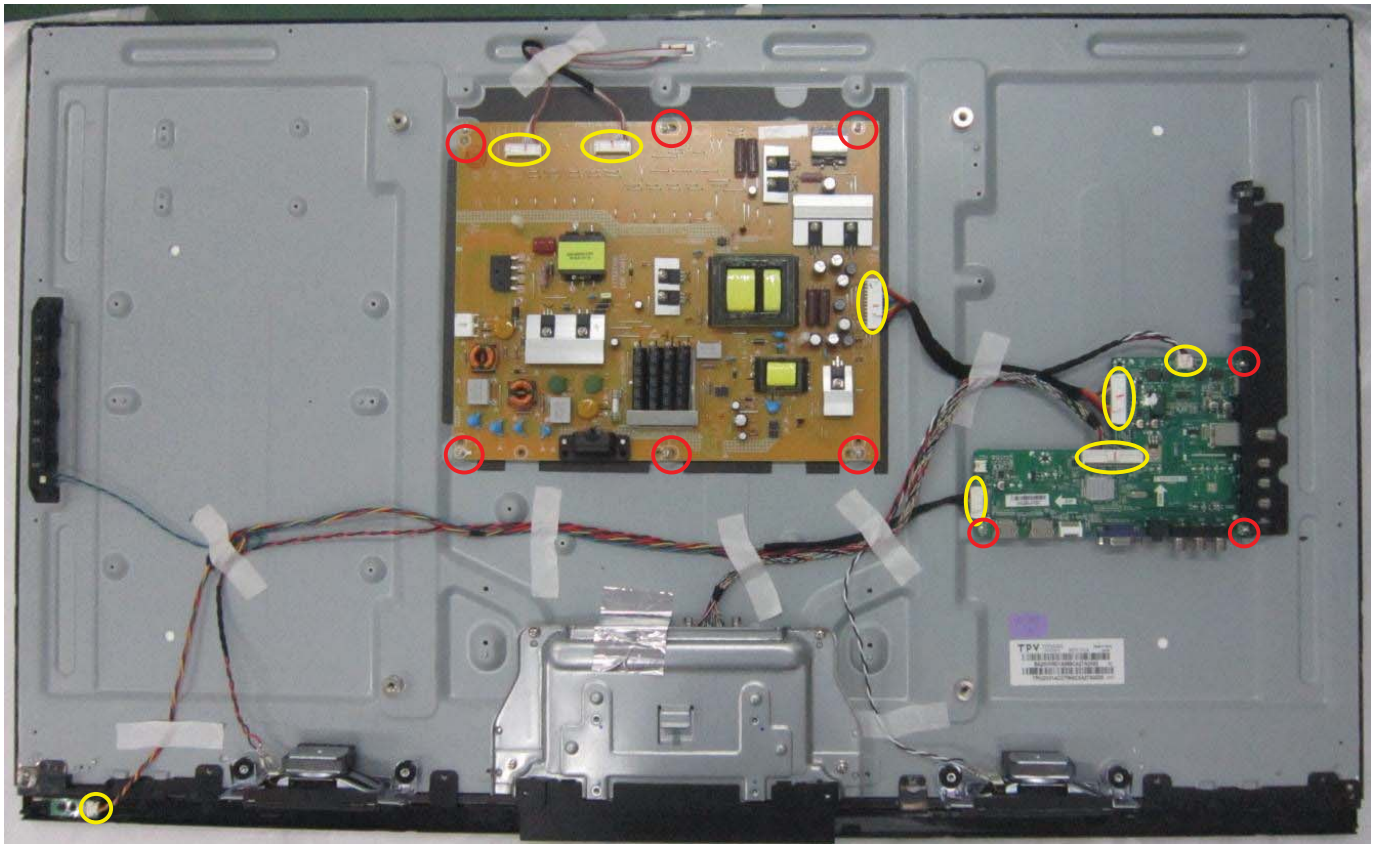

第四步：旋开红色标示的螺丝移除铁件和喇叭。

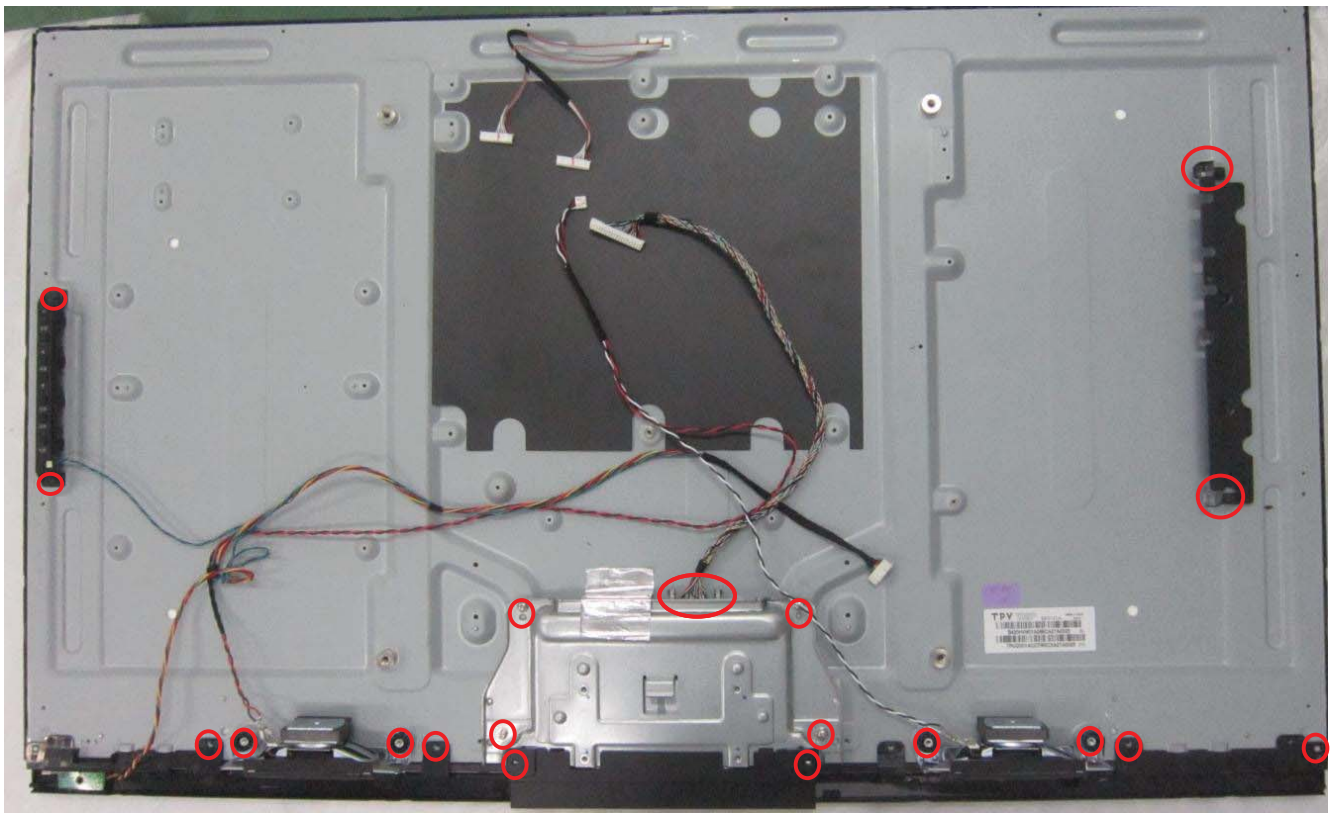

第五步：移除 DECO。

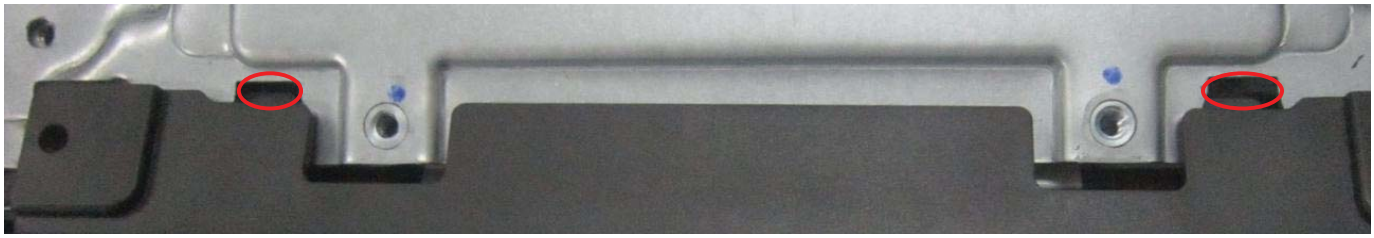

4. 工厂模式调整

ADC调整

1. 在CVI模式下，信号产生器选择为Tim314，Pat185（720p，彩阶画面）
2. 进入工厂菜单: 按遥控器“菜单**+1999+**返回”，如下图。
3. 选择到“AUTO_COLOR” ，按‘OK’键进行手调ADC ,此时会显示“正在等待自动调整”。

   ADC调整完后消失该提示。

图 1

4. 再选择到“VGA”模式，信号产生器切换为Timing137(1024*768@60Hz) Pattern 42(5-DISK).
5. 进入工厂菜单：按遥控器“菜单**+1999+**返回”。
6. 选择到“AUTO_COLOR”，按‘OK’键进行手调ADC，此时会显示“正在等待自动调整”。

   ADC调整完后消失该提示，ADC调整完成。

图 2

白平衡调整

1. 在CVI模式下，信号产生器选择为Tim 311(Component 576i) Pattern 141(80% White)
2. 选择色温：进入OSD菜单，设置->电视设置->画面->色调->冷色。
3. 进入工厂菜单: 按遥控器“菜单**+1999+**返回”，并将**CA210**探头放于**TV**正中间
4. 选择到Item CLR_TEMP_R / CLR_TEMP_G / CLR_TEMP_B并调整其中的参数，如下图，使其色温值在cool的色温规格内（规格见下表）。
5. 重复步骤2到步骤4，进行Normal和 Warm色温调整。

图 3

色温规格：

Color Temp	x	y
Cool	0.262 + 0.020(for 39") 0.264 + 0.020(for 50"/55")	0.267 + 0.020(for 39") 0.265 + 0.020(for 50"/55")
Normal	0.278 + 0.020	0.292 + 0.020
Warm	0.296 + 0.020	0.312 + 0.020

注：下页是关于一般工厂菜单的说明（和本机并非完全相同），仅供参考！

工厂菜单说明							
选项名称	调整范围	TV	AV/S	Comp	HD	PC	注释
Brand	不可调整	o	o	o	o	o	客户名称
Main-MCU ver.	不可调整	o	o	o	o	o	发布软体 Main-MCU 版本
Bootloader ver.	不可调整	o	o	o	o	o	发布软体 Bootloader 版本
Sub-MCU ver.	不可调整	o	o	o	o	o	发布软体 Sub-MCU 版本
EEPROM ver.	不可调整	o	o	o	o	o	发布软体 EEPROM 版本
Date	不可调整	o	o	o	o	o	软体发布日期
Model name	不可调整	o	o	o	o	o	对外机种名
Scaler	不可调整	o	o	o	o	o	Scaler 型号
Panel type	不可调整	o	o	o	o	o	屏的型号
Current source	支持输入源	√	√	√	√	√	当前进工厂时的输入源，该项可切换输入源，对应输入源的 ADC，色温，Scaler 等相关信息同步更新。
Auto color	执行动作	√	√	√	√	√	Auto color 项只对需要做自动校正输入源时有效，否则它不动作。Auto color 会对输入的 ADC 做自动矫正，调整 ADC Gain 和 Offset RGB 值。
ADC Gain	根据 IC SPEC	√	√	√	√	√	在 Auto Color 做完立即更新，并可手动调整。
ADC Offset	根据 IC SPEC	√	√	√	√	√	在 Auto Color 做完立即更新，并可手动调整。
Color temp.	支持色温	√	√	√	√	√	当前设置的色温，该项可切换色温模式，并正确显示色温名称，对应色温的 Scaler Gain & Offset RGB 值等相关信息同步更新。
Scaler Gain	根据 IC SPEC	√	√	√	√	√	Scaler Gain 值在白平衡调整时立即更新，并可手动调整。
Scaler Offset	根据 IC SPEC	√	√	√	√	√	Offset RGB 值在白平衡调整时立即更新，并可手动调整。
Burn in	On/Off	√	√	√	√	√	打开或关闭 Burn in 模式。当 Burn in 设置为 On 时它将响应工厂遥控器功能；EEPROM Init 后默认为 On 状态；Reset 后默认为 Off。
EEPROM Init	执行动作	√	√	√	√	√	实现的是初始化除了 HDCP key 和产品序列号以外的全部 EEPROM，如主菜单的 OSD 默认值，工厂菜单的 ADC 数据，白平衡设定值，Black light 和 Language 等，同时把 Burn in 设置为 On，响应工厂遥控器功能，设置输入源为 TV。
Back LIT time	不可调整	o	o	o	o	o	背光打开总计时，在 EEPROM Initial 或 Factory reset 后都清为 0，显示值用十进制表示，当时间到达显示最大值时就不再变化。

Total time	不可调整	o	o	o	o	o	AC ON 主电源供电总计时，在 EEPROM Initial 或 Factory reset 后都清为 0，显示值用十进制表示，当时间到达显示最大值时就不再变化。
Black light	根据 IC SPEC	*	*	*	*	*	设置背光灯的亮度
Language	支持语言	*	*	*	*	*	设置出厂时用户模式菜单语言，当在工厂菜单中更改此项值时，用户模式的 OSD 中的菜单语言也做相应的更改并将该值保存（仅北美向可选）
Energy LOGO	On/Off	*	*	*	*	*	仅中国向有该项
Reset	执行动作	√	√	√	√	√	实现的是复位除了 HDCP 和产品序列号，工厂菜单的 ADC 数据，白平衡设定值，Black light，Language 和 Energy Logo 以外的全部 EEPROM 数据，如主菜单的 OSD 默认值，并把用户菜单 Language 设置为工厂 Language，同时把 Burn in 设置为 Off，禁止响应工厂遥控器功能，设置输入源为 TV。
Exit	执行动作	√	√	√	√	√	退出工厂模式

备注：

1. √表示该项有效, ×表示该项不存在，o 表示存在但选不到，*表示可选；

2. 不同机型工厂模式项目略有增删；

3. 进工厂模式时 Burn in 自动关闭。

5. 线路图

5.1 电源板

29PFL3330/T3-32PFL3330/T3　715G5508P01001002M

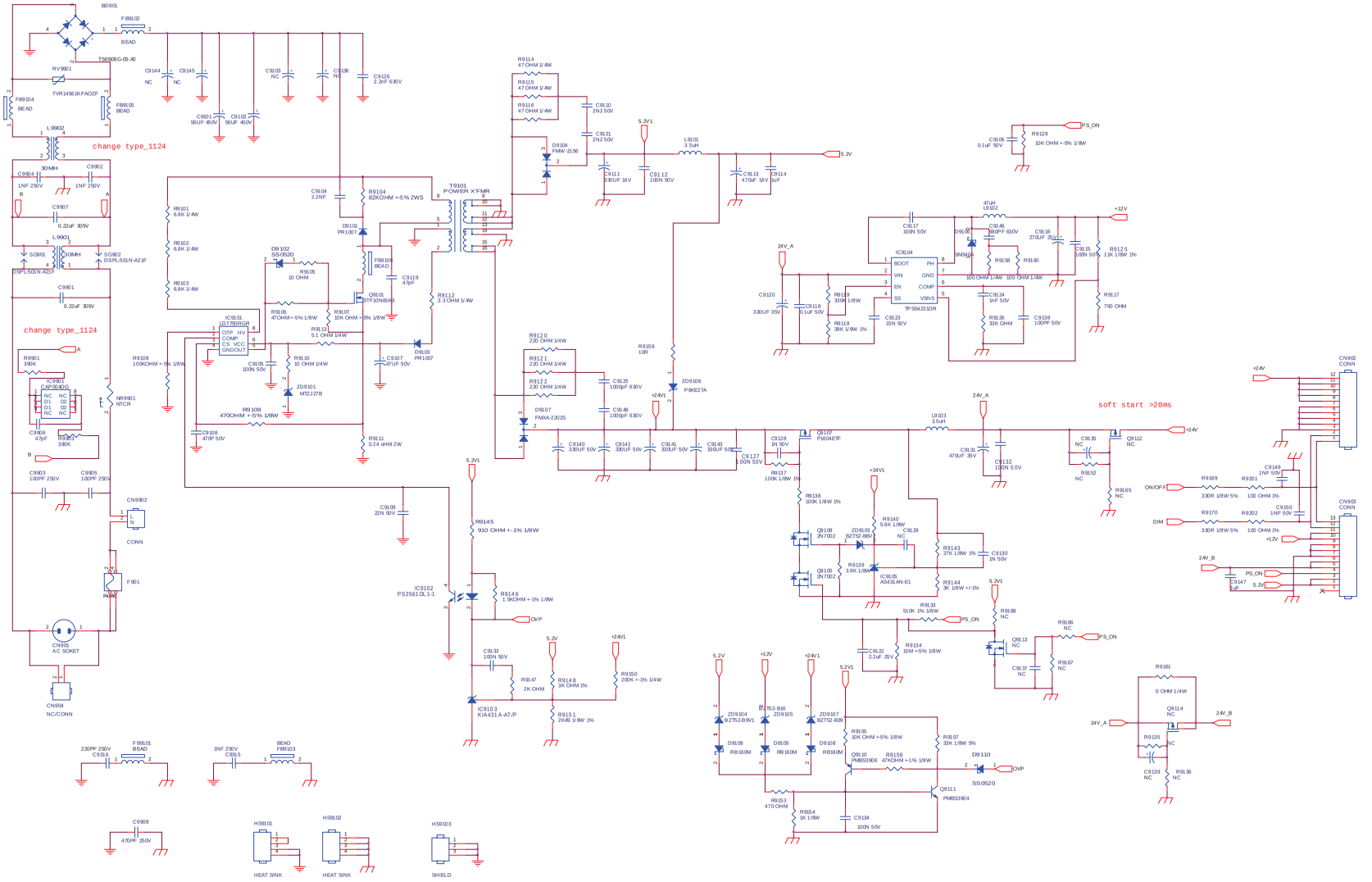

TPV (Top Victory Electronics Co., Ltd.)		OEM MODEL	Basic on G5259-P0C	Size	Custom
富士康集团	Basic on G5259-P0C	TPV MODEL	2K12.32'	Rev	
Key Component	01. POWER	PCB NAME	Basic on G5259-P0C	修改	
Date	Thursday, July 19, 2012	Sheet	1 of 2		

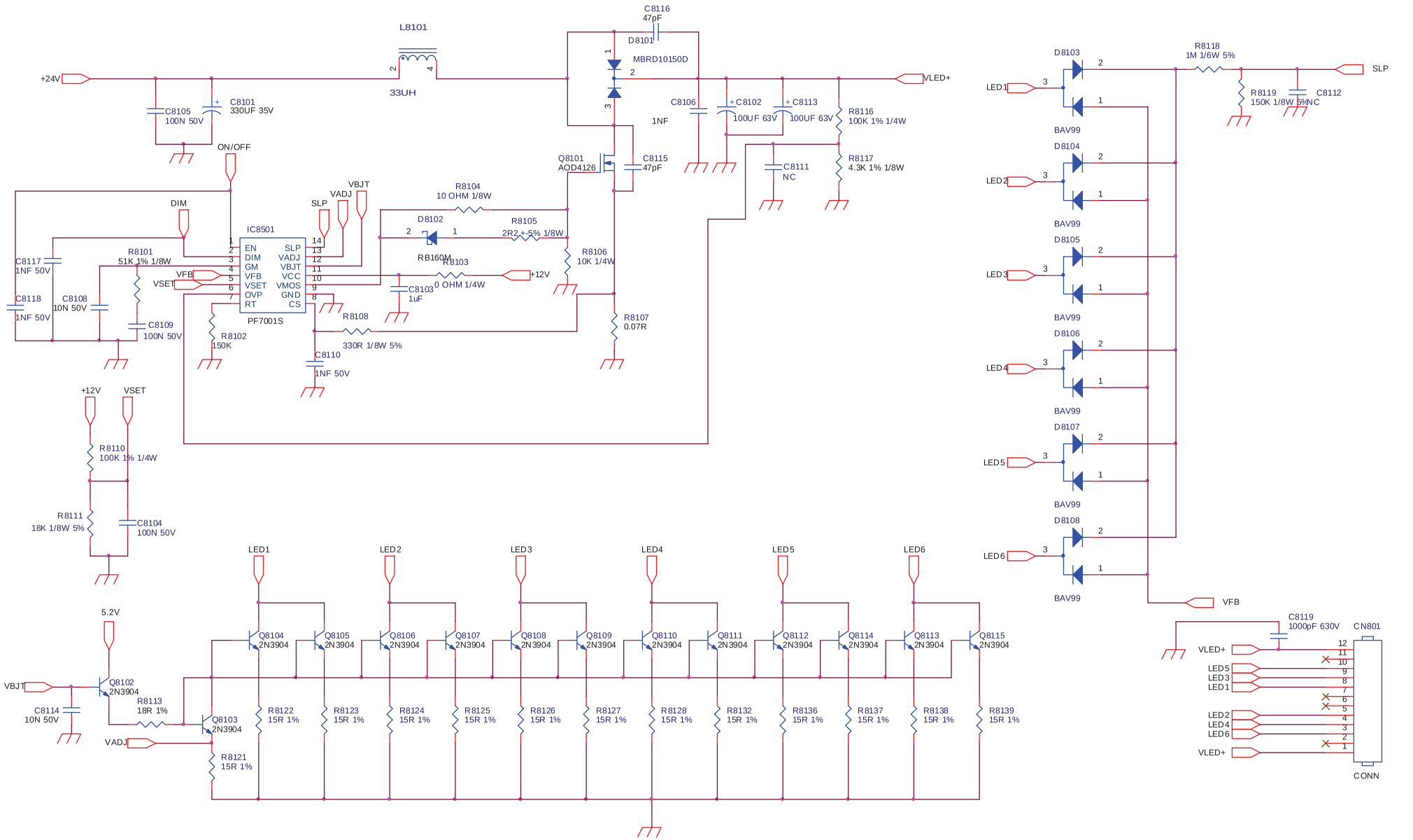

TPV (Top Victory Electronics Co., Ltd.)		OEM MODEL	new	Size	B
結陽瓜鋼腹	NEW	TPV MODEL	2k12 26~32	Rev	
Key Component	02.LED DRIVER	PCB NAME	NEW-P0A	称爹	
Date	Thursday, July 19, 2012	Sheet	2 of 2		

37PFL3330/T3 715G5793P01001002M

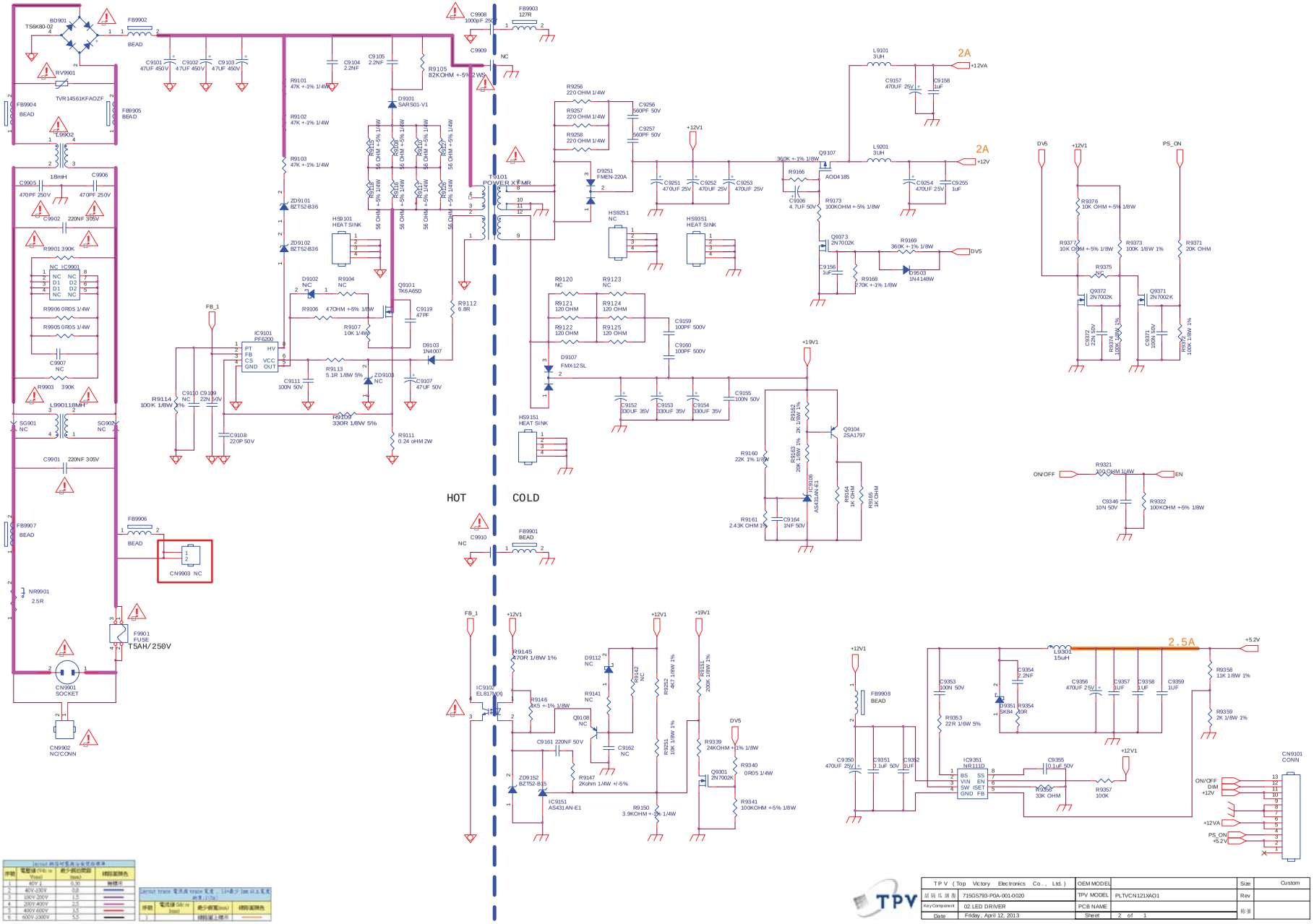

TPV (Top Victory Electronics Co., Ltd.)	OEM MODEL		Size / Custom
顶固瓦 顶数	TPV MODEL	PLTVCN121XAO1	Rev
Key Component: 02.LED DRIVER	PCB NAME		称
Date: Friday, April 12, 2013	Sheet 2 of 1		

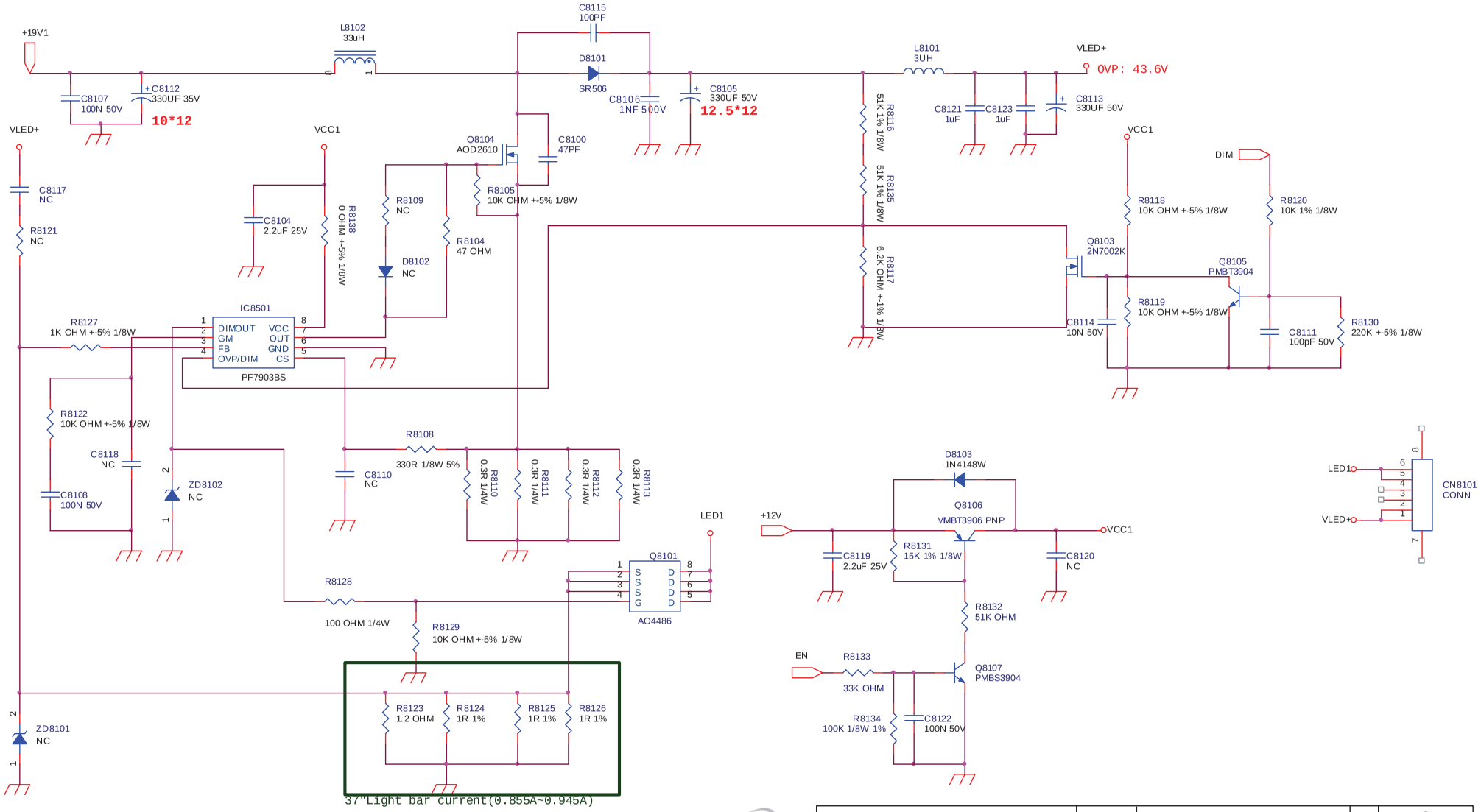

TPV (Top Victory Electronics Co., Ltd.)		OEM MODEL		Size	B
結隔瓜細腹	715G5793-P0A-001-0020	TPV MODEL	PLTVCN121XAO1	Rev	
Key Component	02.LED DRIVER	PCB NAME		称爹	
Date	Wednesday, January 16, 2013	Sheet	2 of 2		

42PFL3330/T3 715G5246P02W21002S

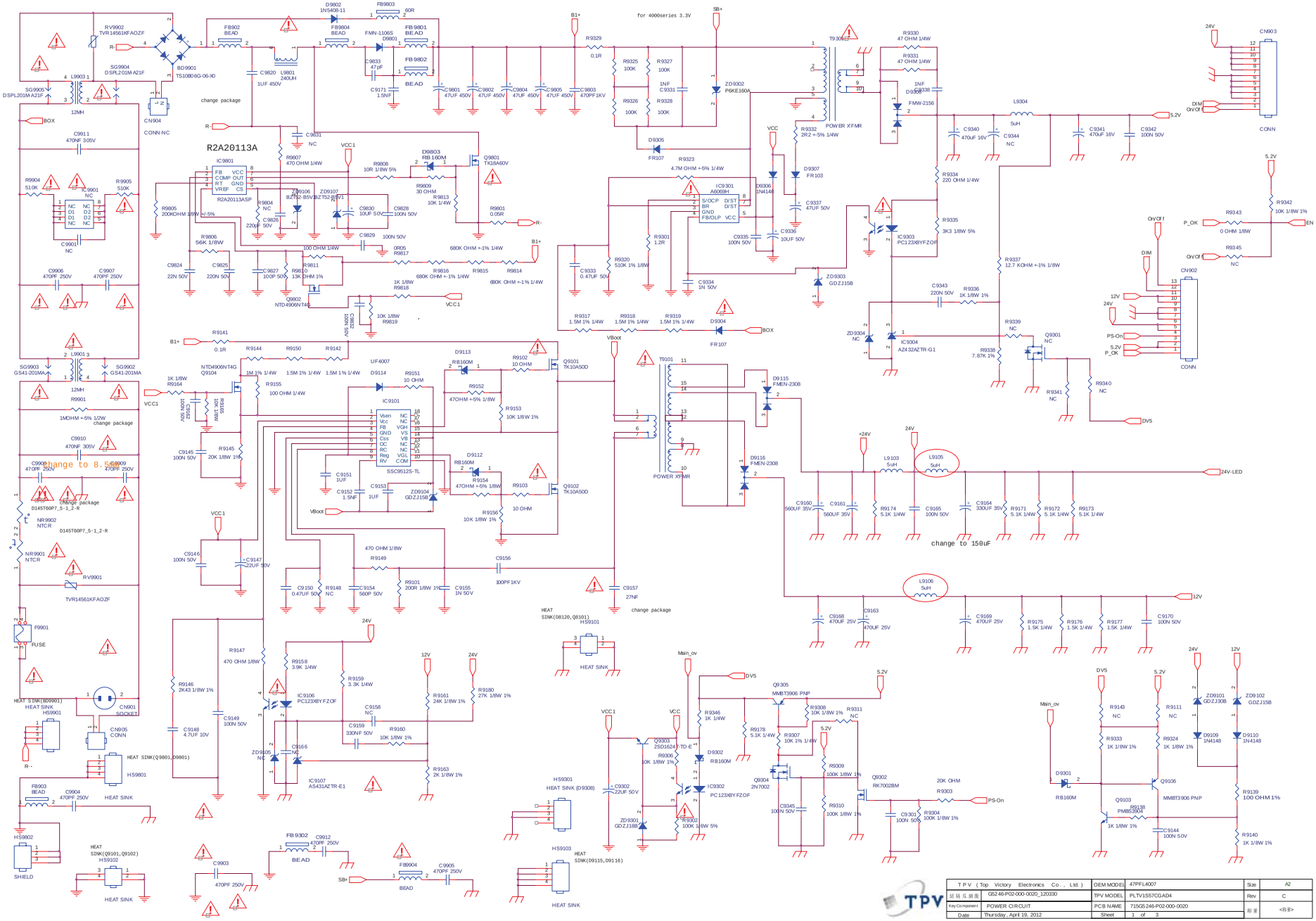

T P V (Top Victory Electronics Co., Ltd.)		OEM MODEL	47PFL4007	Size	A2
冠捷科技股份	G52-46-P02-000-0020_120330	TPV MODEL	PLTV1S57CGAD4	Rev	C
Key Component	POWER CIRCUIT	PCB NAME	715G5246-P02-000-0020	标准	<标准>
Date	Thursday, April 19, 2012	Sheet	1 of 3		

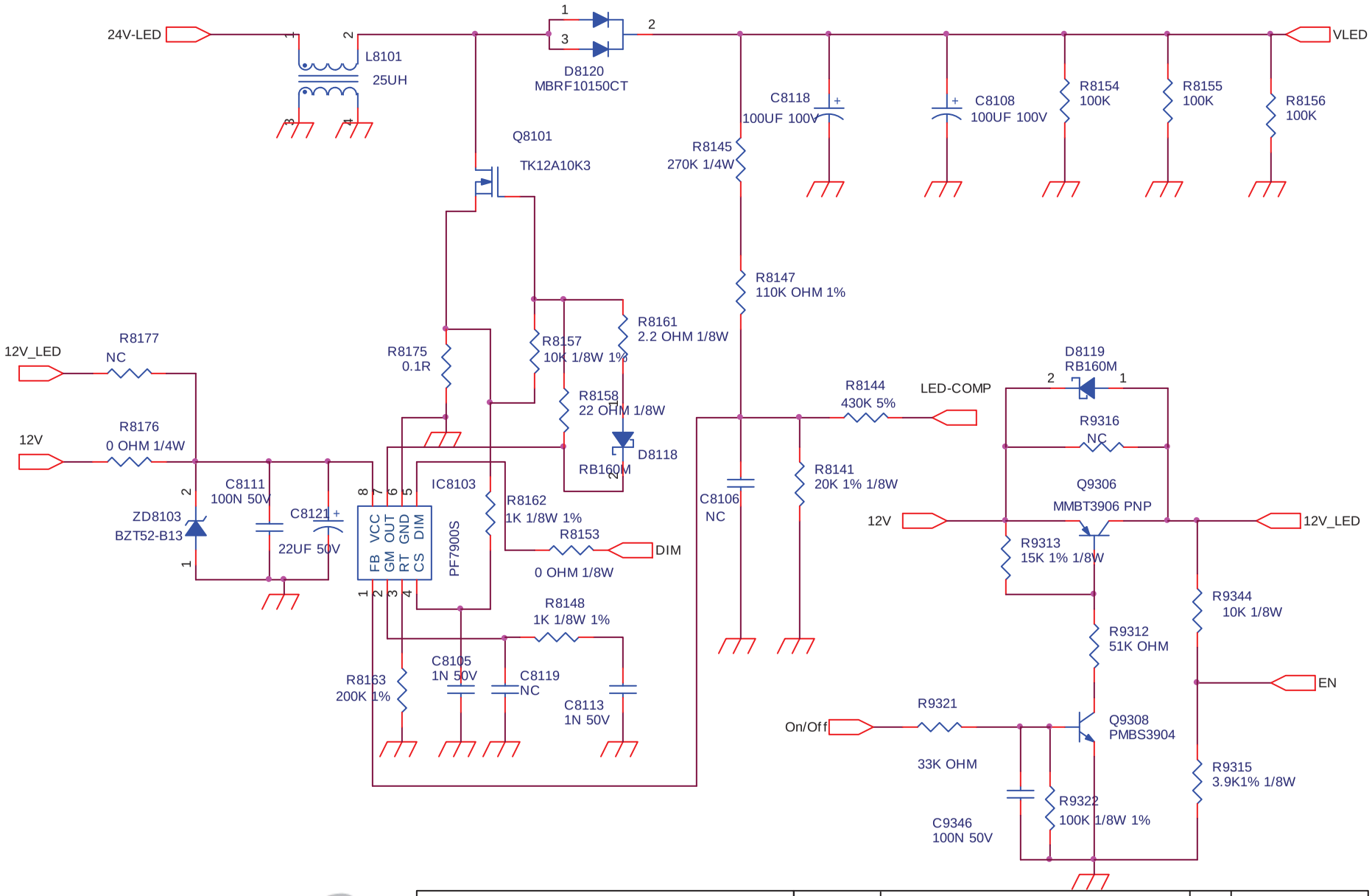

TPV (Top Victory Electronics Co., Ltd.)		OEM MODEL	47PFL4007	Size	A
結隔瓜綑腹	G5246-P02-000-0020_120330	TPV MODEL	PLTV1S57CGAD4	Rev	C
Key Component	24V to VLED (DC/DC)	PCB NAME	715G5246-P02-000-0020	称爹	<称爹>
Date	Thursday, April 19, 2012	Sheet	2 of 3		

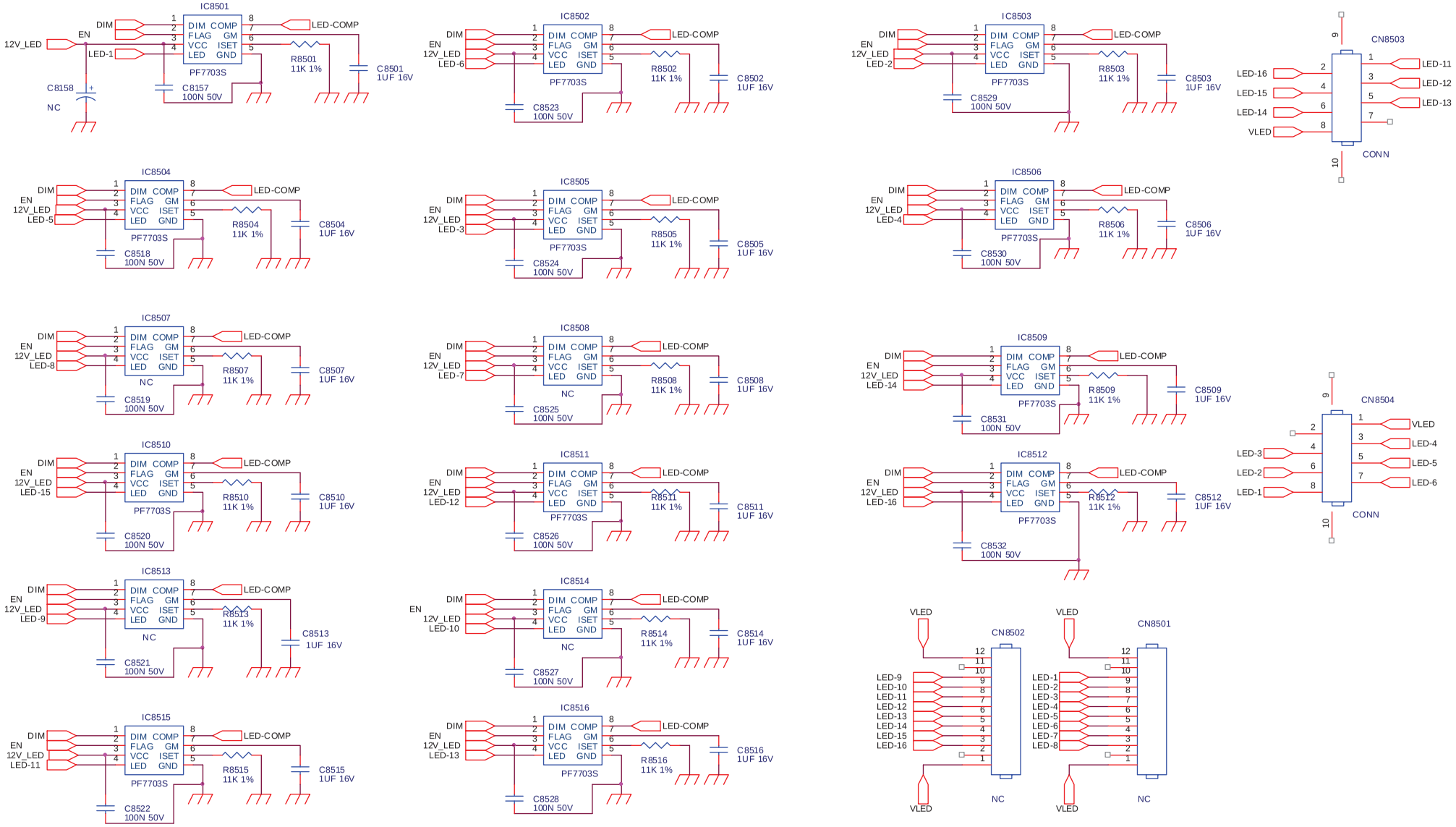

T P V (Top Victory Electronics Co., Ltd.)		OEM MODEL	47PFL4007	Size	B
結隔瓜鋼腹	G5246-P02-000-0020_120330	TPV MODEL	PLTV1S57CGAD4	Rev	C
Key Component	.LED Driver	PCB NAME	715G5246-P02-000-0020	称爹	<称爹>
Date	Thursday, April 19, 2012	Sheet	3 of 3		

5.2 IR 板

715G5471R01000004B&715G5471R02000004S

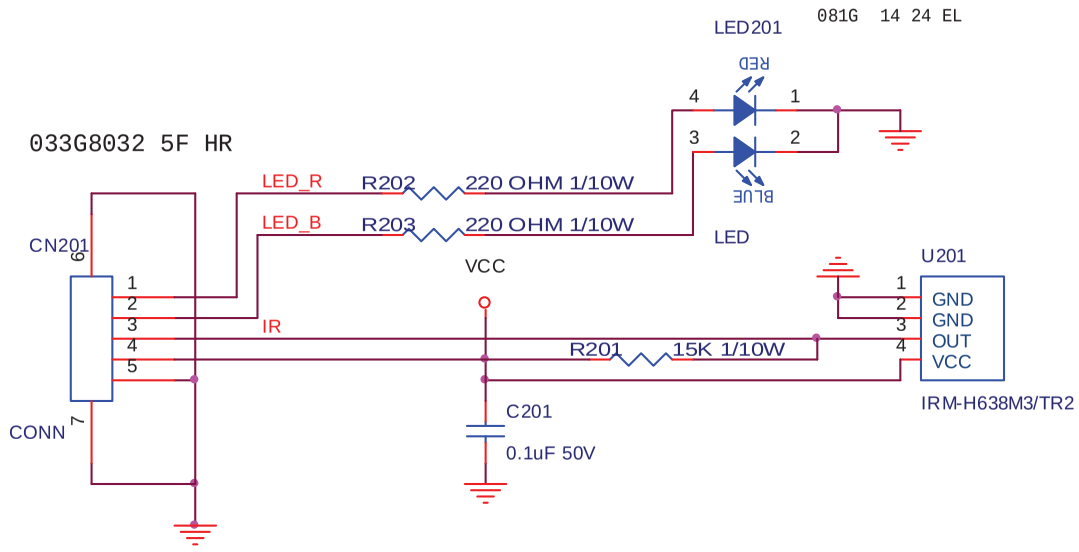

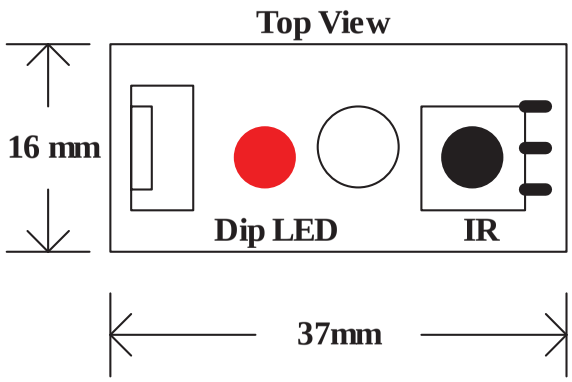

TPV (Top Victory Electronics Co., Ltd.)		OEM MODEL	X	Size	A
結隔瓜綱腹	715G5471-R0B-000-0040	TPV MODEL	Dynex UFC Model	Rev	A
Key Component	02-IR&LED	PCB NAME	715G5471-R0B-000-0040	称爹	<称爹>
Date	Wednesday, February 01, 2012	Sheet	2 of 2		

5.2 按键板

715G5298K01000004S

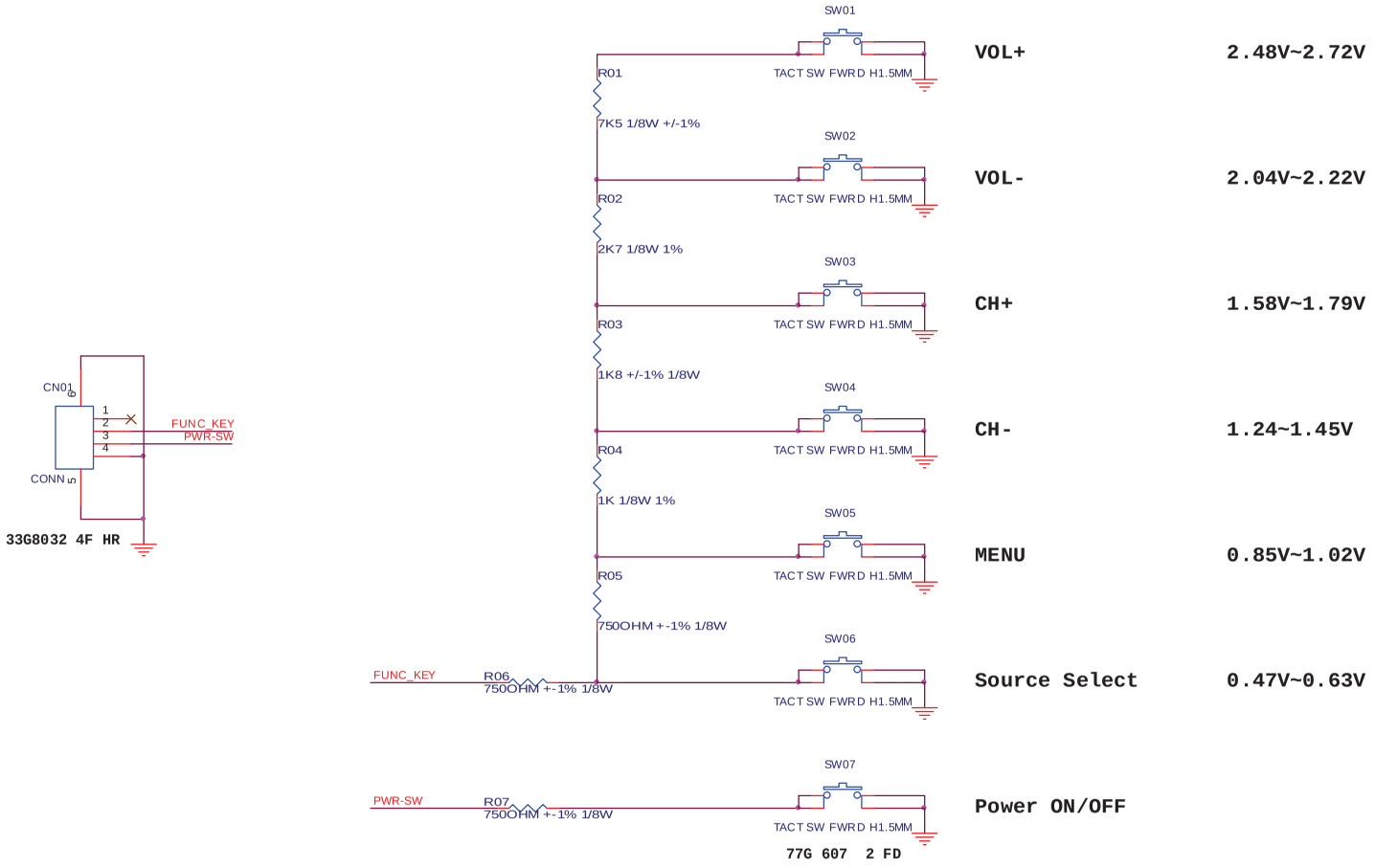

TPV (Top Victory Electronics Co., Ltd.)		OEM MODEL	X	Size	Custom
結陽瓜鋼腹	G4187-1-X-X-3-100127	TPV MODEL	42LCD TV	Rev	A
Key Component	02-Keypad	PCB NAME	715GXXXX	称爹	<称爹>
Date	Friday, September 02, 2011	Sheet	2 of 2		

6.烧录 SOP

FW upgrade with USB SOP

Step 1: Ready for F/W Upgrade

1.1 F/W:

1.2 Prepare a USB memory (The file system of USB memory must be FAT16 or FAT 32).

1.3 Copy the files from your computer to the USB memory, and remove it from computer's USB port!

Step 2: F/W Upgrade

2.1 Plug the USB memory on the USB port on the left side I/O port of TV. (Figure 2.1)

Figure 2.

2.2 AC on (Power plug Figure 2.2/2.3)

Figure 2.2

Figure 2.3

2.3. Press the power key on the Remote Control or the right side of TV to turn on TV as figure2.4

figure 2.4

2.4 .When TV detects the USB memory, the LED light is blue and flickers as figure 2.5. For a moment the LED light becomes red and flickers as figure 2.6 which represents TV is updating. The update is ok until the LED becomes blue again as figure2.7. Unplug U-disk from TV and restart TV.

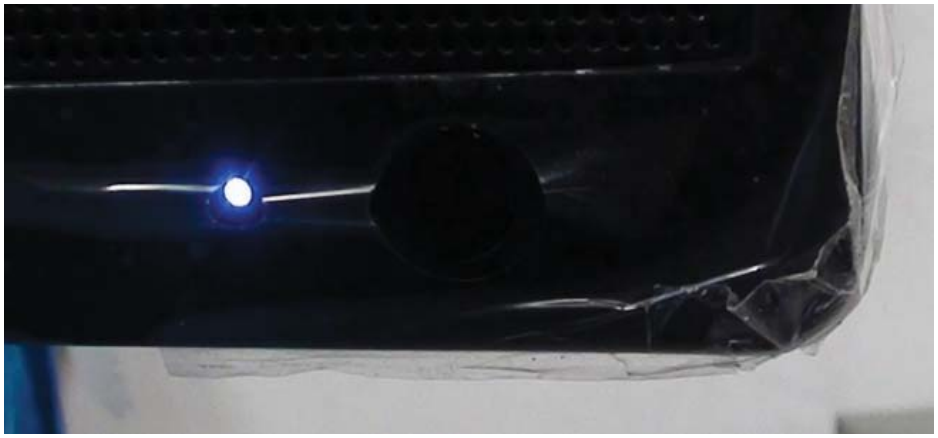

Figure 2.5

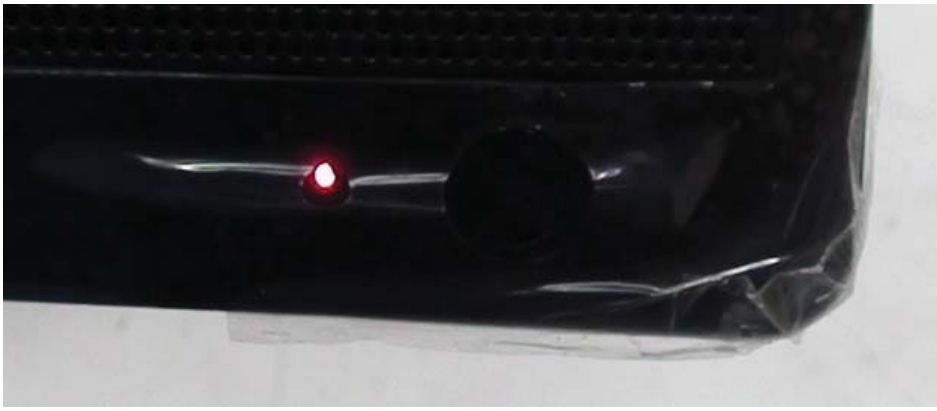

Figure 2.6

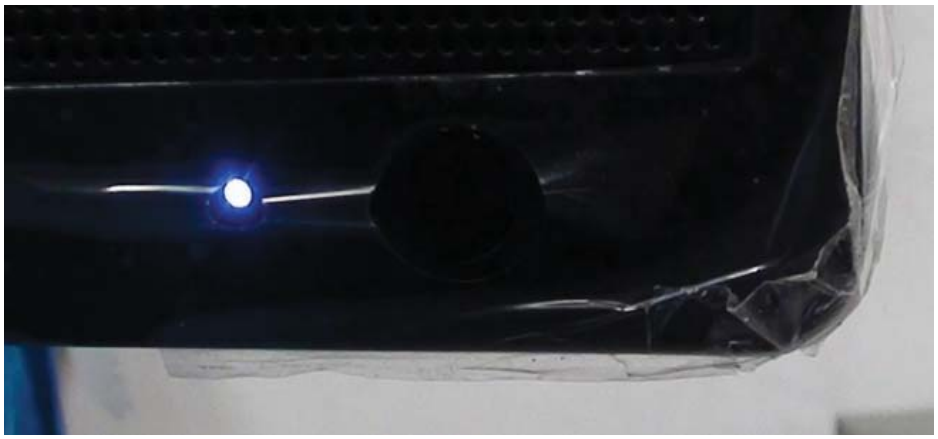

Figure 2.7

Step 3: Check the F/W version and reset .

3.1 Turn on the TV and Press “MENU”+”1”+”9” +”9” +”9” key rapidly on the Remote control to enter the factory mode.

3.2 Check the F/W version on the second row of the factory mode info, If F/W version is incorrect, please re-update FW.

3.3 Do reset in factory mode.

7. 故障处理流程

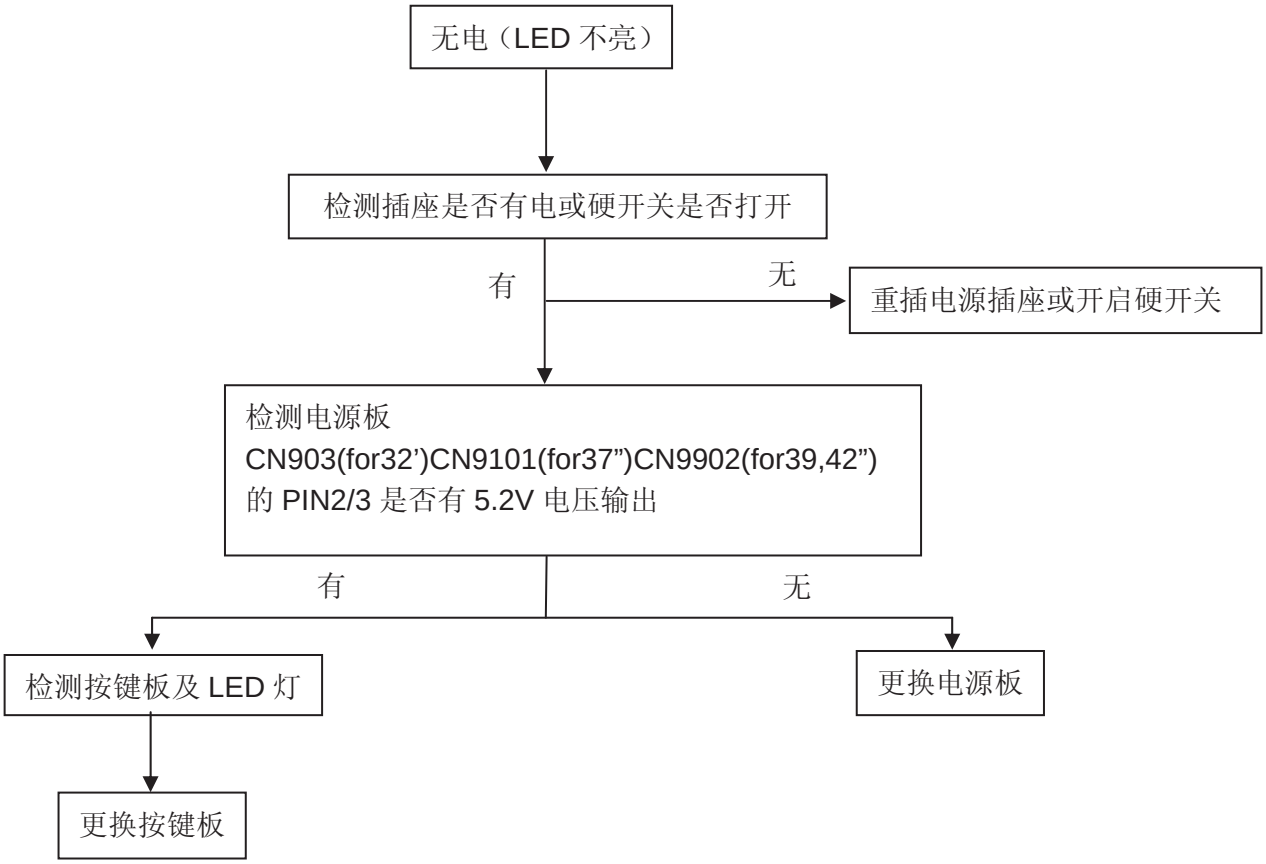
无电（LED 不亮）
检测插座是否有电或硬开关是否打开
有
无
重插电源插座或开启硬开关
检测电源板
CN903(for32')CN9101(for37")CN9902(for39,42")
的 PIN2/3 是否有 5.2V 电压输出
有
无
检测按键板及 LED 灯
更换电源板
更换按键板

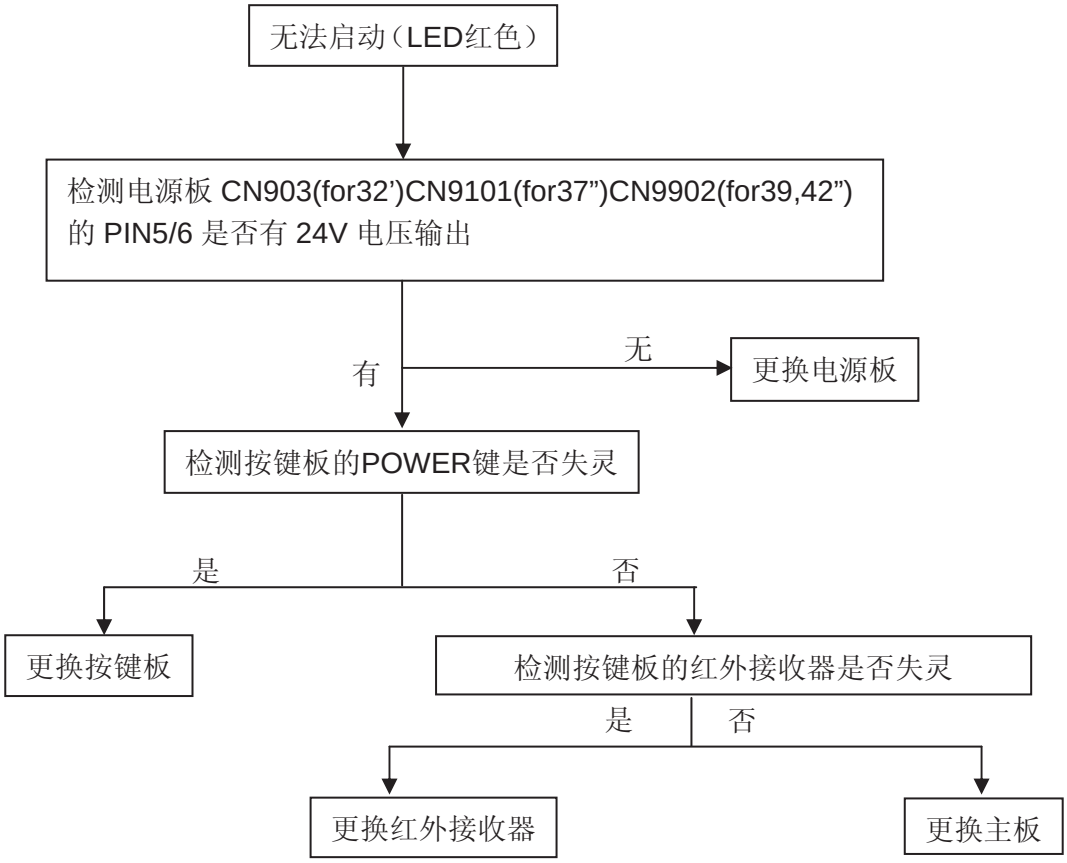
无法启动（LED红色）
检测电源板 CN903(for32')CN9101(for37")CN9902(for39,42")
的 PIN5/6 是否有 24V 电压输出
有
无
更换电源板
检测按键板的POWER键是否失灵
是
否
更换按键板
检测按键板的红外接收器是否失灵
是
否
更换红外接收器
更换主板

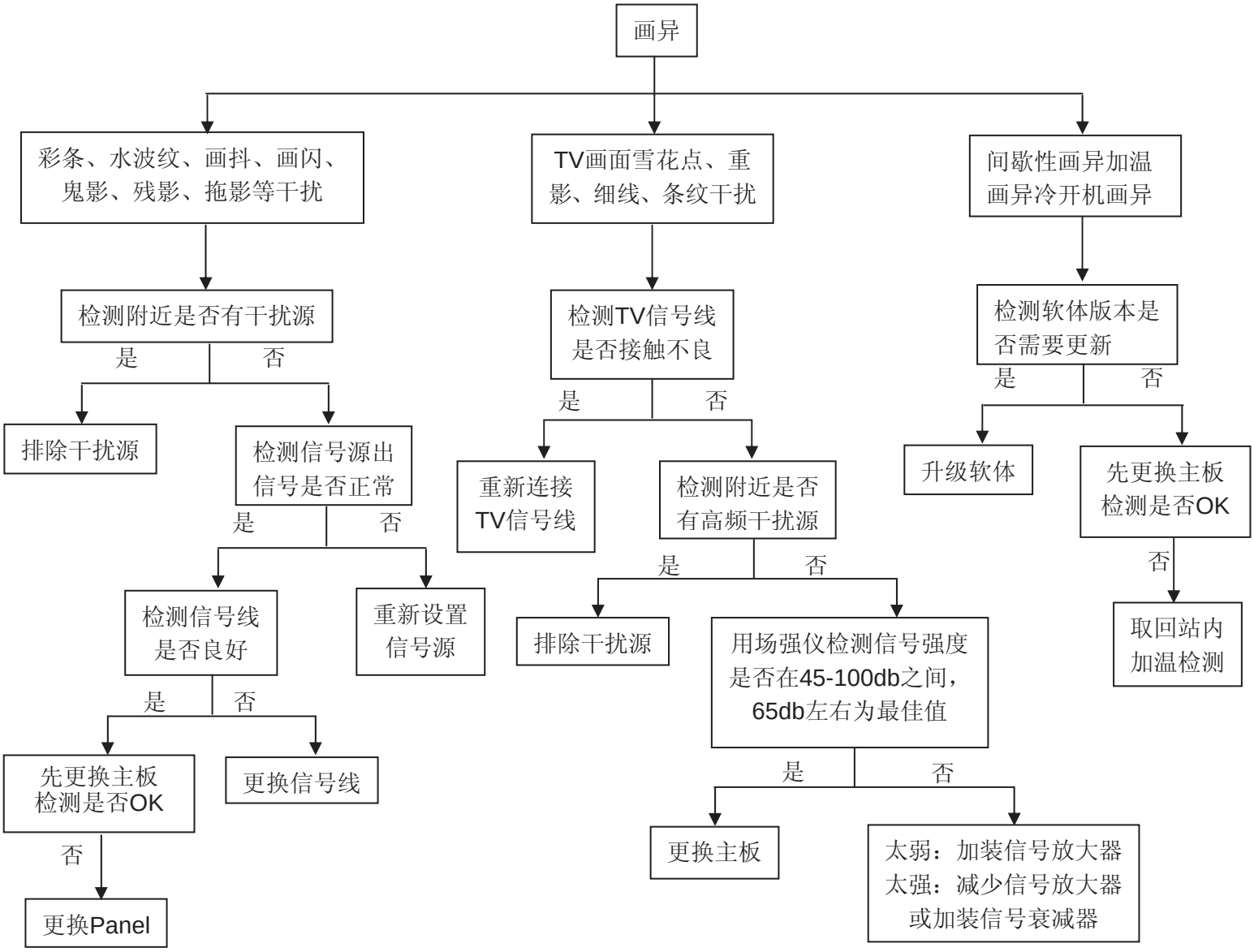
画异
彩条、水波纹、画抖、画闪、鬼影、残影、拖影等干扰
TV画面雪花点、重影、细线、条纹干扰
间歇性画异加温画异冷开机画异
检测附近是否有干扰源
是
否
排除干扰源
检测信号源出信号是否正常
是
否
检测信号线是否良好
是
否
先更换主板检测是否OK
否
更换Panel
更换信号线
重新设置信号源
检测TV信号线是否接触不良
是
否
重新连接TV信号线
检测附近是否有高频干扰源
是
否
排除干扰源
用场强仪检测信号强度是否在45-100db之间，65db左右为最佳值
是
否
更换主板
太弱：加装信号放大器
太强：减少信号放大器
或加装信号衰减器
检测软体版本是否需要更新
是
否
升级软体
先更换主板检测是否OK
否
取回站内加温检测

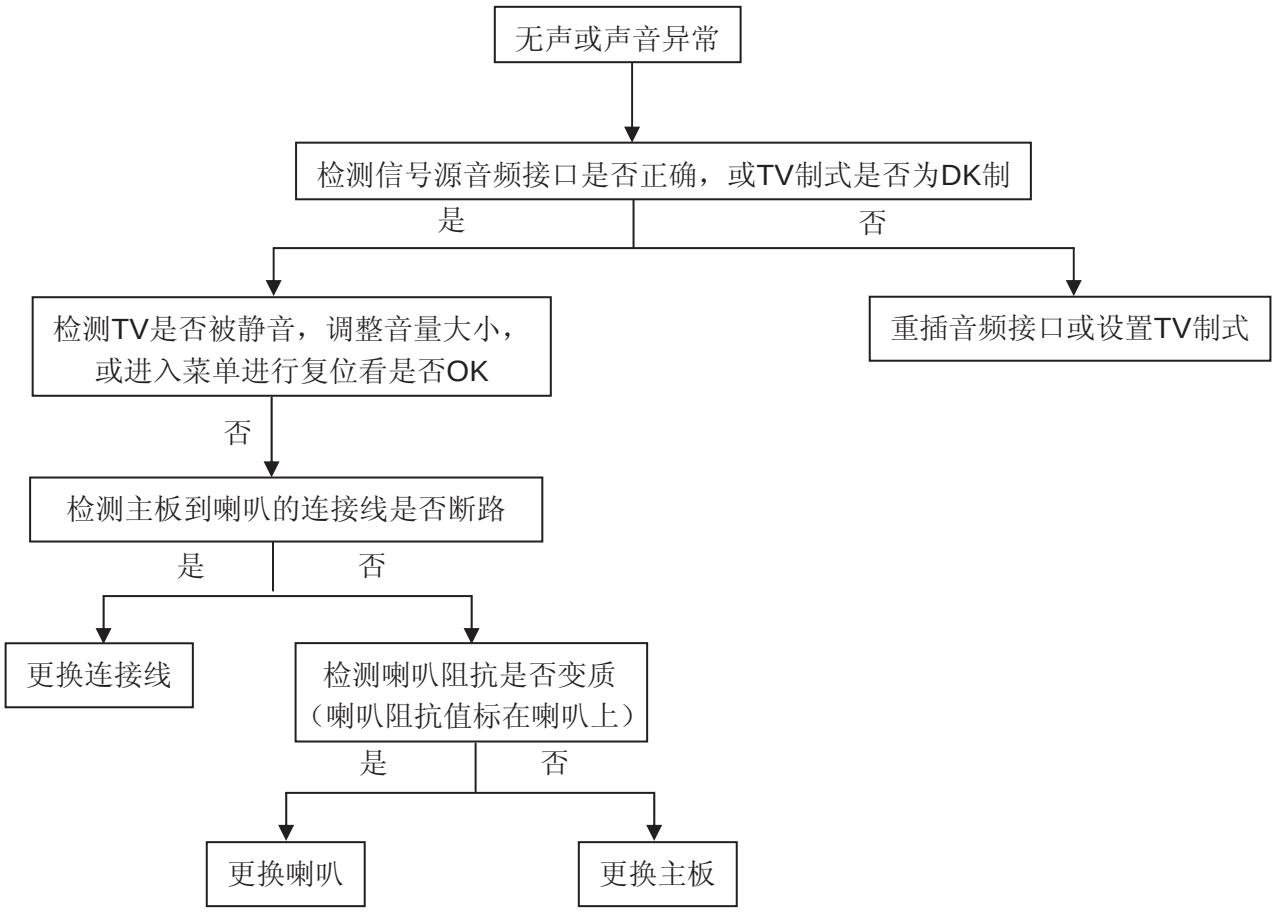
无声或声音异常
检测信号源音频接口是否正确，或TV制式是否为DK制
是
否
检测TV是否被静音，调整音量大小，或进入菜单进行复位看是否OK
重插音频接口或设置TV制式
否
检测主板到喇叭的连接线是否断路
是
否
更换连接线
检测喇叭阻抗是否变质（喇叭阻抗值标在喇叭上）
是
否
更换喇叭
更换主板

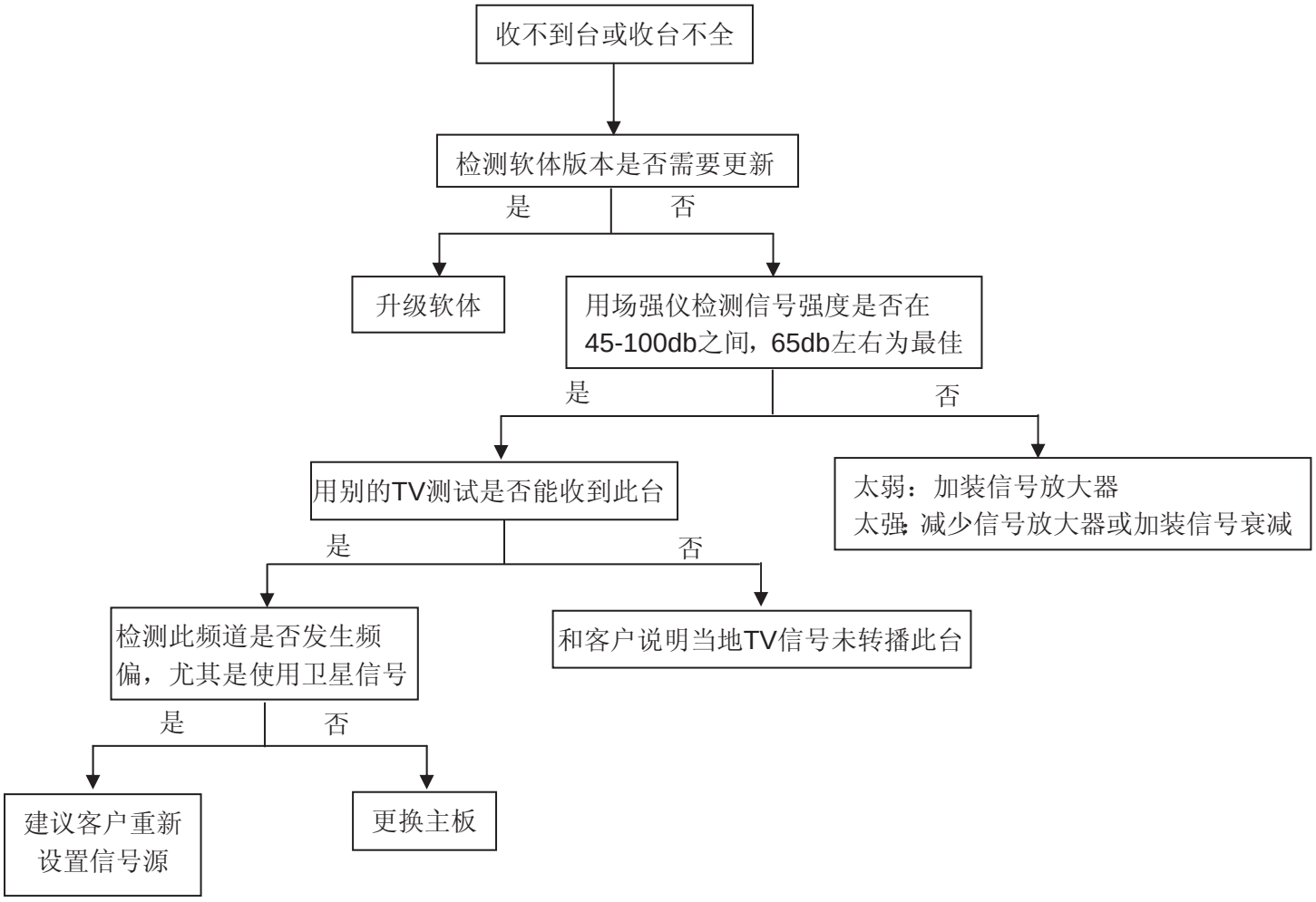
收不到台或收台不全
检测软体版本是否需要更新
是
否
升级软体
用场强仪检测信号强度是否在45-100db之间，65db左右为最佳
是
否
太弱：加装信号放大器
太强：减少信号放大器或加装信号衰减
用别的TV测试是否能收到此台
是
否
检测此频道是否发生频偏，尤其是使用卫星信号
和客户说明当地TV信号未转播此台
是
否
建议客户重新设置信号源
更换主板

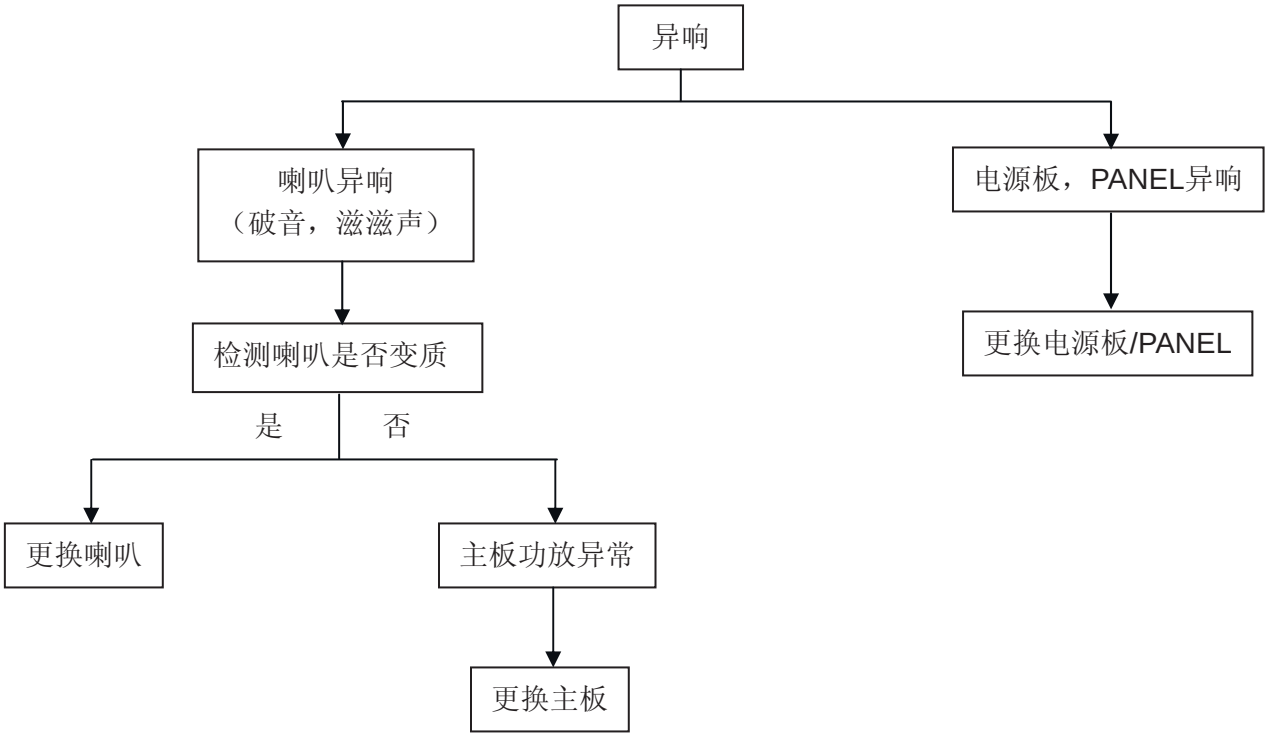
异响
喇叭异响
（破音，滋滋声）
电源板，PANEL异响
检测喇叭是否变质
更换电源板/PANEL
是
否
更换喇叭
主板功放异常
更换主板

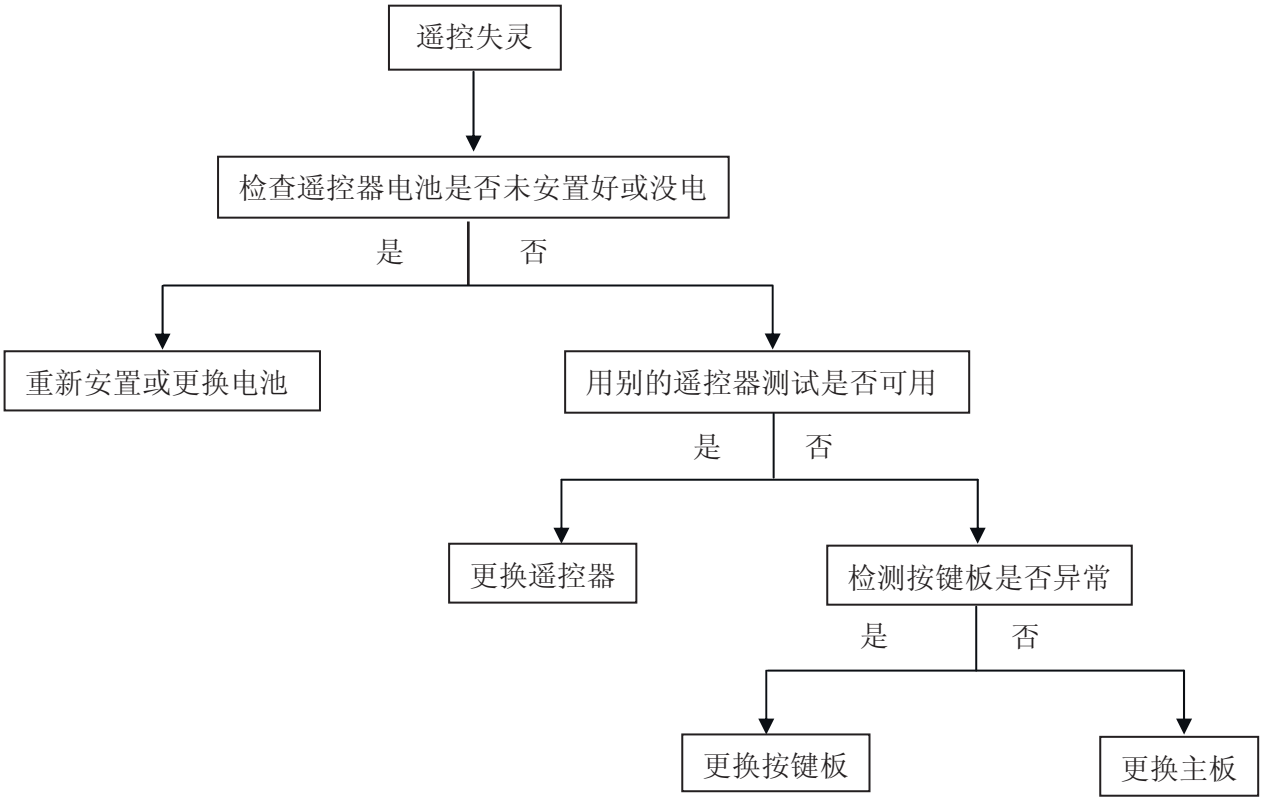
遥控失灵
检查遥控器电池是否未安置好或没电
是
否
重新安置或更换电池
用别的遥控器测试是否可用
是
否
更换遥控器
检测按键板是否异常
是
否
更换按键板
更换主板

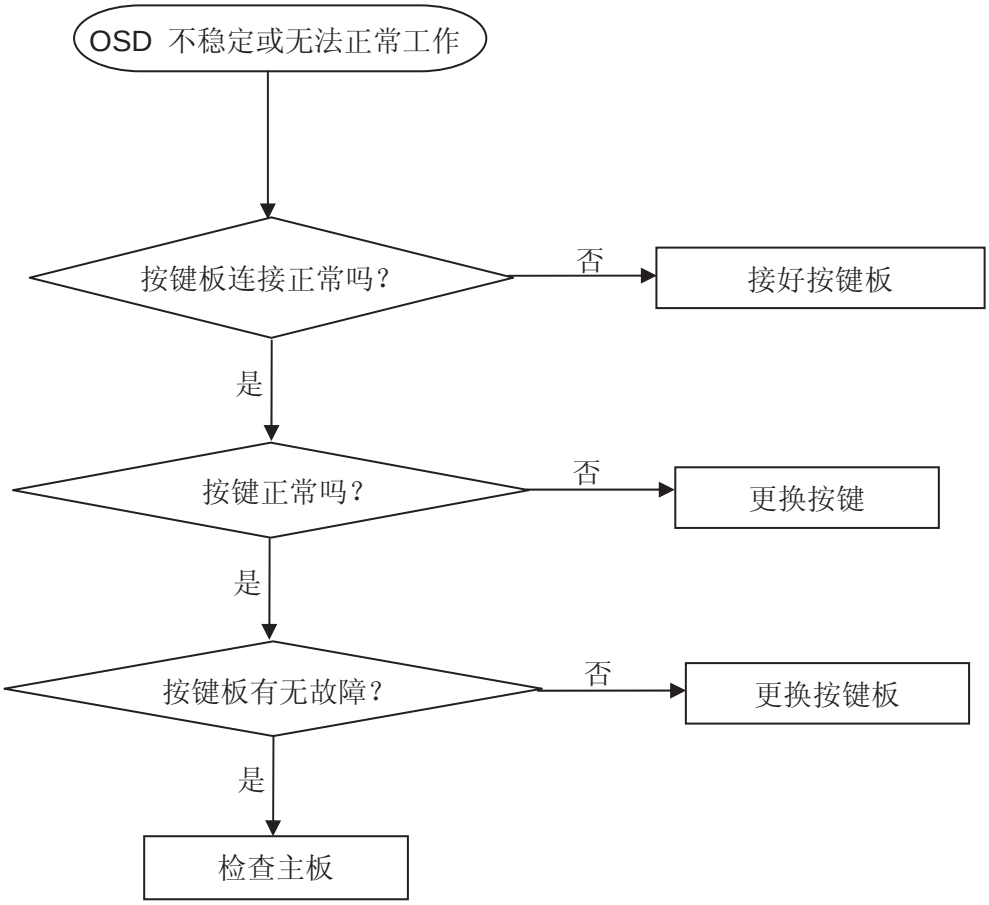
OSD 不稳定或无法正常工作
按键板连接正常吗？
否
接好按键板
是
按键正常吗？
否
更换按键
是
按键板有无故障？
否
更换按键板
是
检查主板

8. 主要 IC 管脚及内部框图

Block Diagra

32PFL3330/T3
LD7750RGR SOP-7

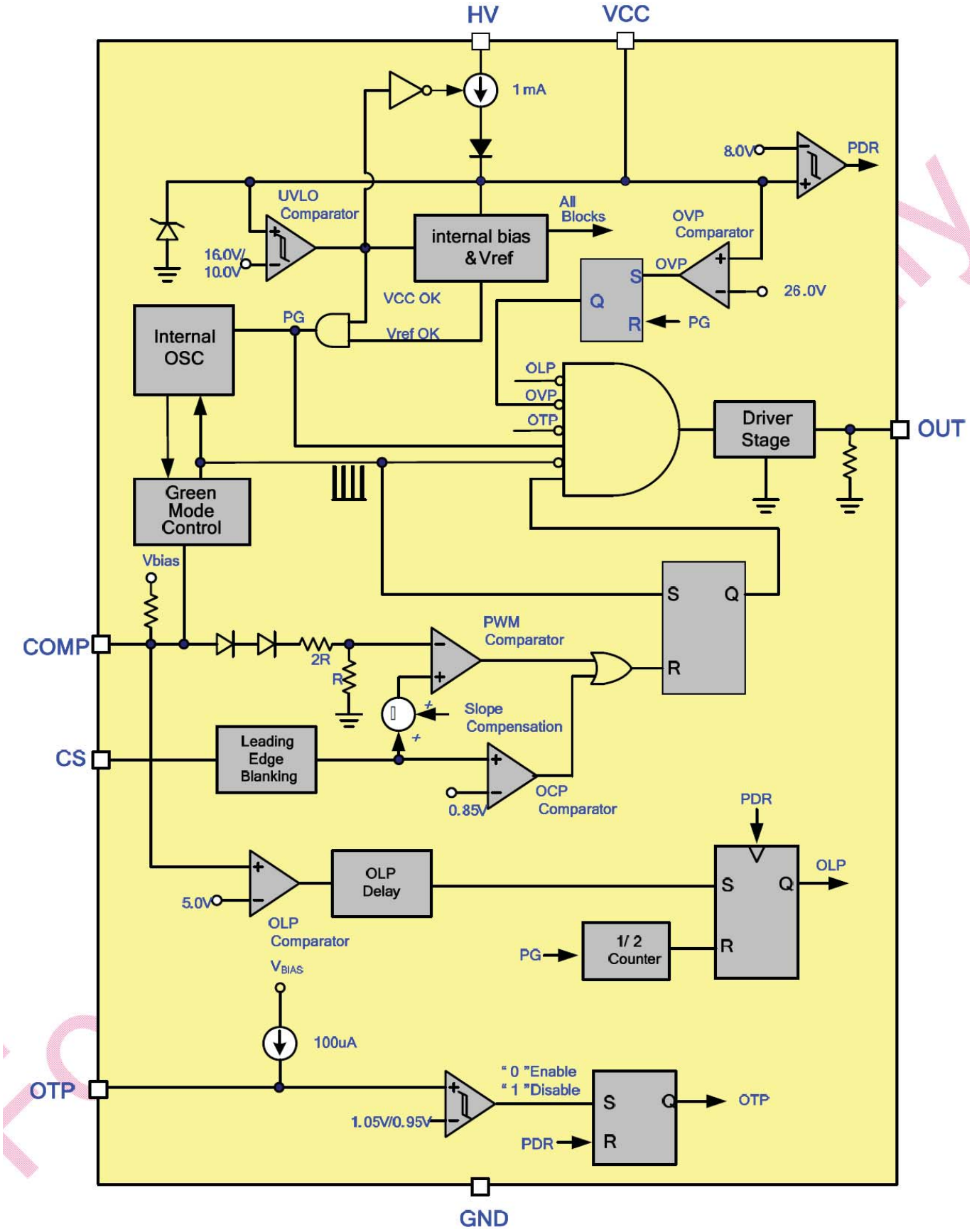

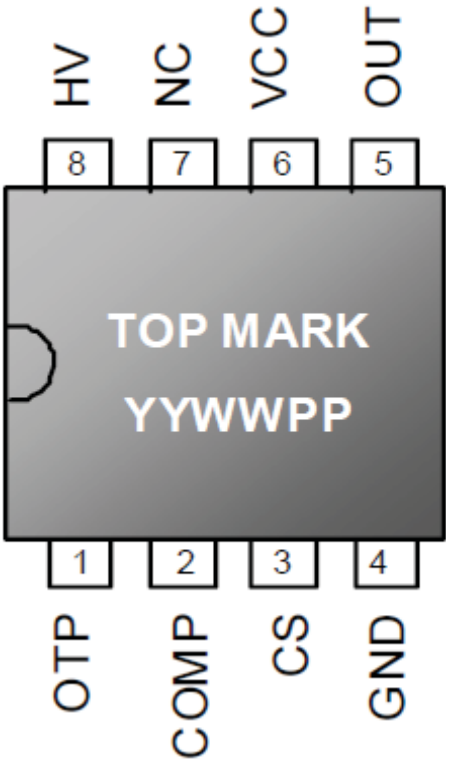
OTP
COMP
CS
GND
1
2
3
4
TOP MARK
YYWWPP
8
7
6
5
HV
NC
VCC
OUT

PF7001S SOP-14

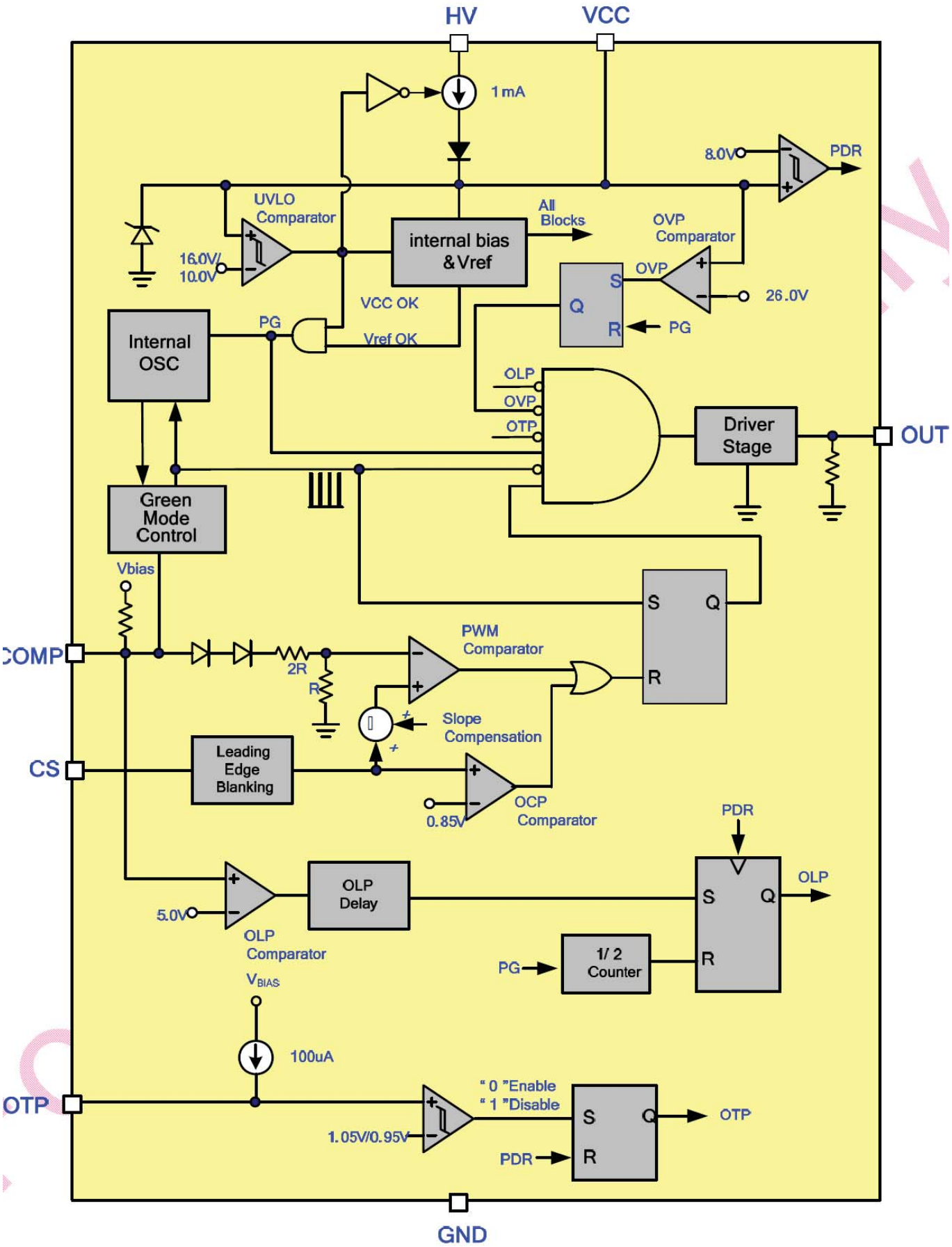

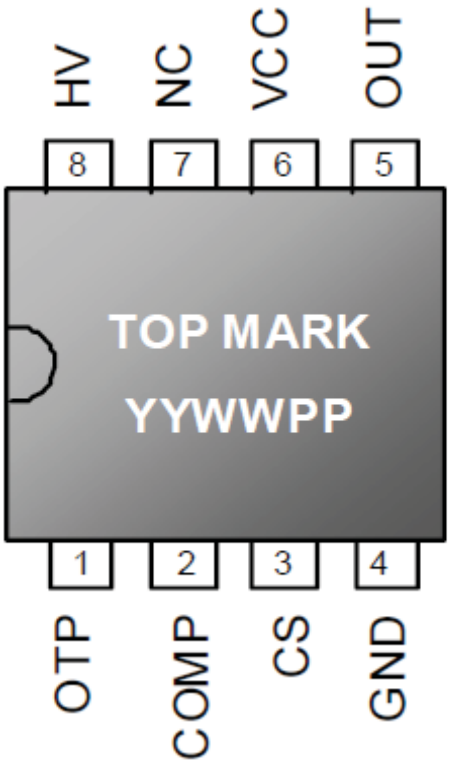
OTP
COMP
CS
GND
1
2
3
4
TOP MARK
YYWWPP
8
7
6
5
HV
NC
VCC
OUT

37 PFL3330/T3
PF7903BS SOP8

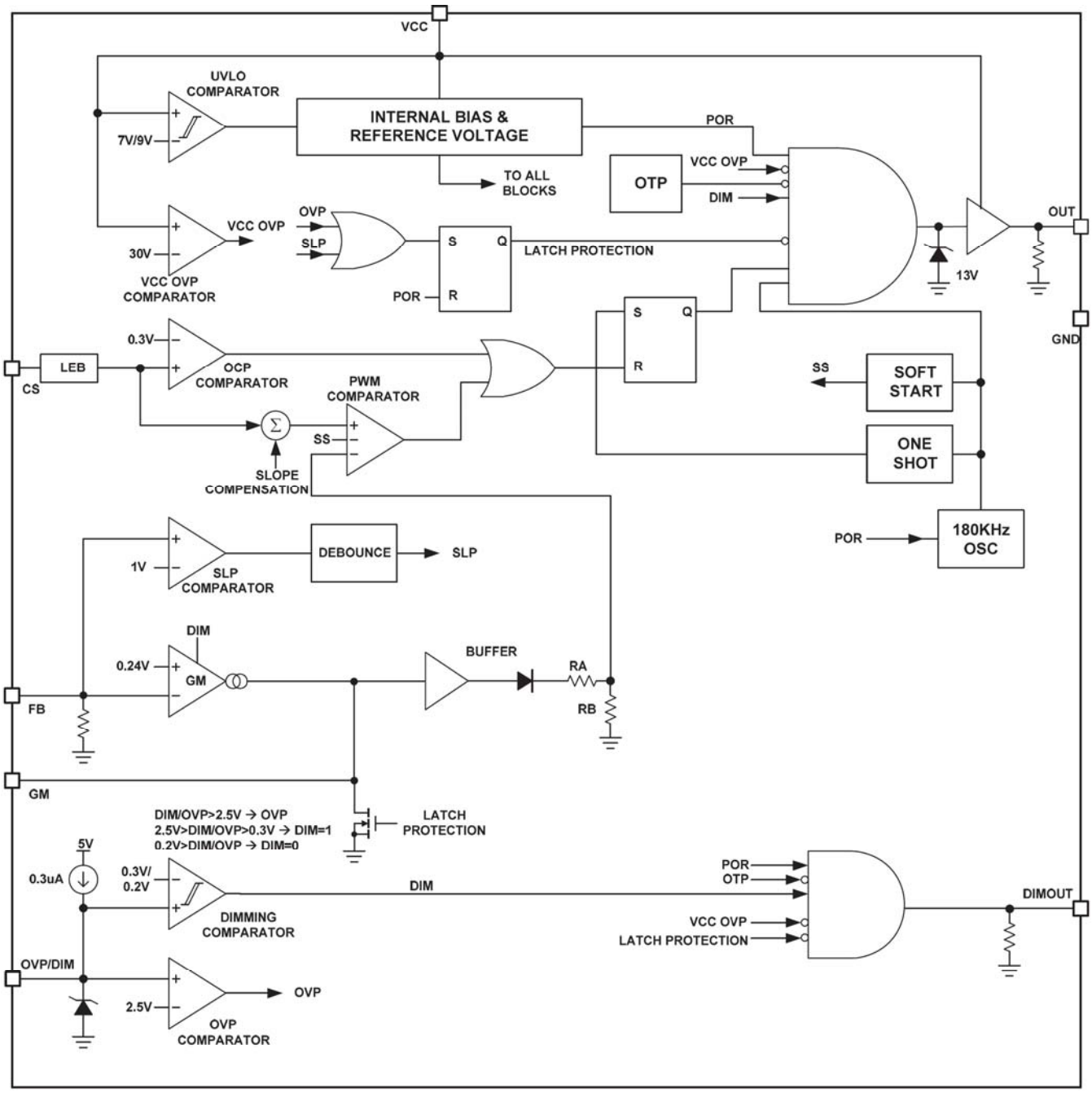

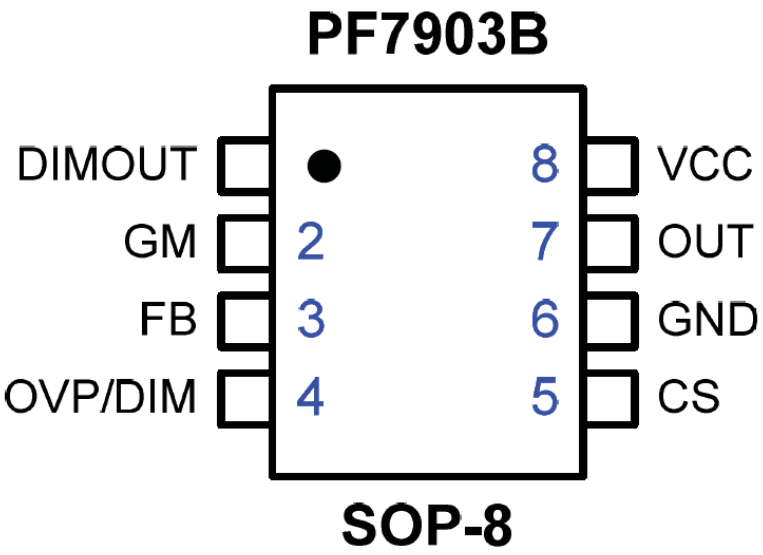
PF7903B
DIMOUT
GM
FB
OVP/DIM
2
3
4
8
7
6
5
VCC
OUT
GND
CS
SOP-8

42 PFL3330/T3
SSC9522S-TL

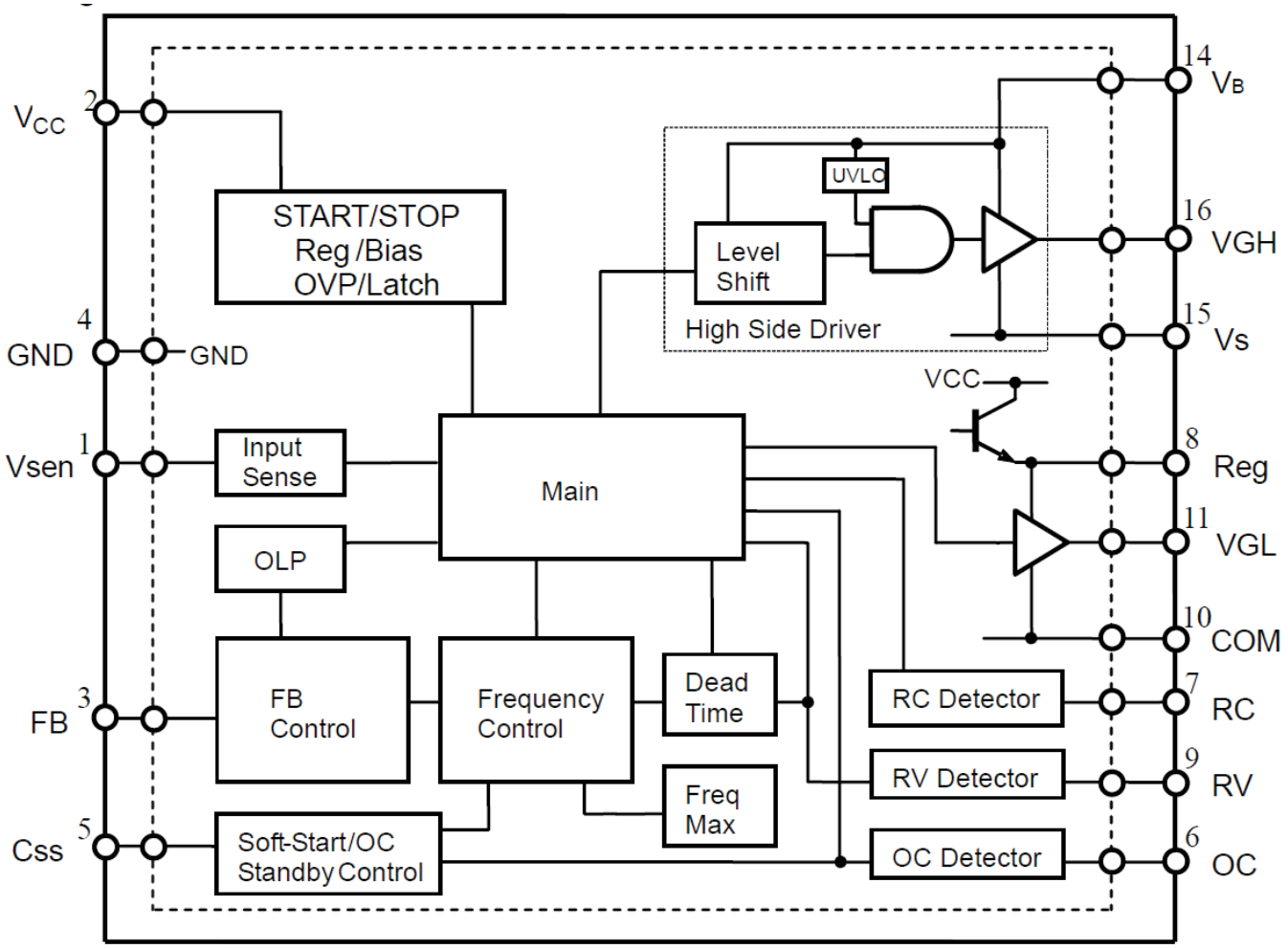

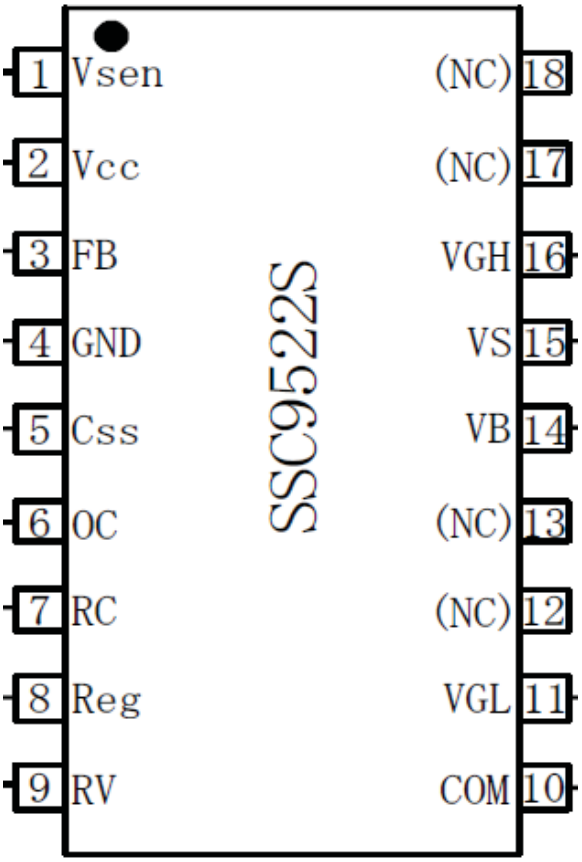

PF7700S

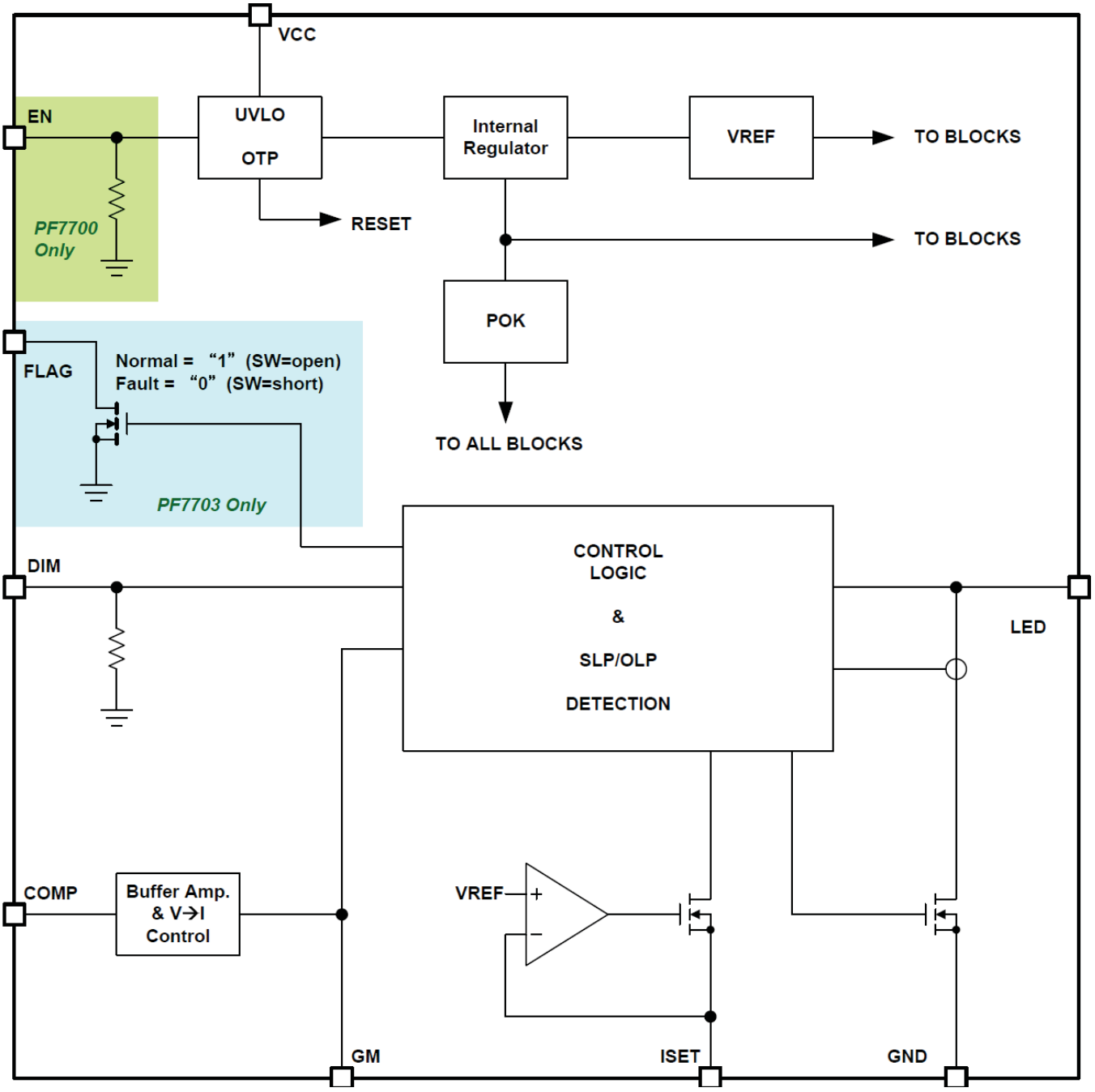
VCC
EN
UVLO
OTP
Internal Regulator
VREF
TO BLOCKS
RESET
TO BLOCKS
PF7700 Only
POK
FLAG
Normal = "1" (SW=open)
Fault = "0" (SW=short)
TO ALL BLOCKS
PF7703 Only
DIM
CONTROL LOGIC
&
SLP/OLP
DETECTION
LED
COMP
Buffer Amp. & V→I Control
VREF
GM
ISET
GND

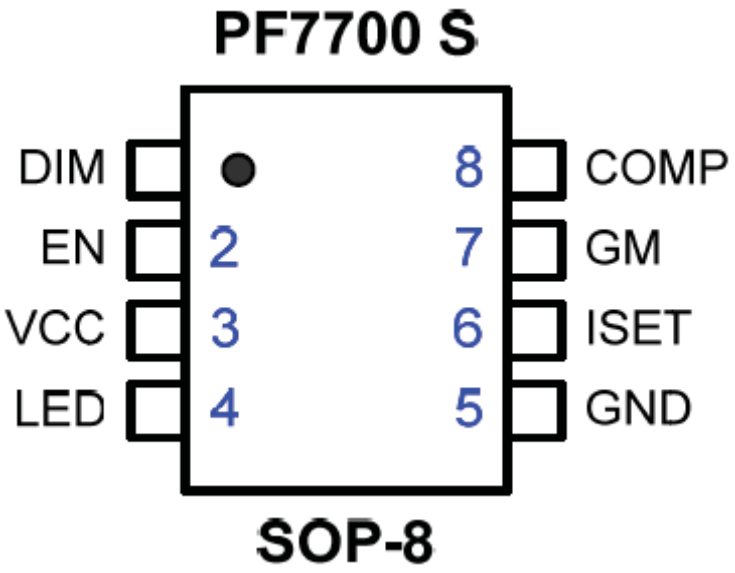
PF7700 S
DIM
EN
VCC
LED
2
3
4
8
7
6
5
COMP
GM
ISET
GND
SOP-8

9. BOM

注意：以下初始版本 **BOM** 信息仅供维修参考，不作为下单依据，如有变更，恕不另行通知，请以 **RSPL** 或 **Service BOM(http://cs.tpv.com.cn)** 为准，谢谢！

29PFL3330_T3 E29C21NDCTPHNNX

点位	组件	对象描述	备注
	X40G029081301B	RATING LABEL FOR 29PFL3330/T3	
	X41G78DV81311B	WARRANTY CARD TPV ADDRESS	
	052G 1186	SMALL TAPE	
	052G 1211 B	CONDUCTIVE TAPE 85MM *40MM *0.09MM (单导)	
	052G 2191 A	PAPER TAPE	
	070GHDCP500HDC	HDCP CODE	
ECN1	095G801313DS05	HARNESS 13P-13P 400	
ECN1	095G801313WS05	HARNESS 13P-13P 400MM	2nd-source
	0M1G 940 5125	SCREW	
	0M1G1030 6 47 CR3	SCREW	
	0M1G1730 6120	SCREW 3X6	
	0Q1G1030 10 47 CR3	SCREW	
	0Q1G1040 6120	SCREW	
	317GAAMB087CVT	MAIN BOARD T.VST59S.72A	
SP01	378G0110567YAQ	16 OHM 11W L132*W34*34.5H 0 NO	
ECNA1	395G801404DY22	HARNESS 4P-B&R+B&W 650/500	
ECNA1	395G801404XY22	HARNESS 4P-B&R+B&W 650/500	2nd-source
ECN8	395G801410DY62	HARNESS 10P-5P+4P 500/450	2nd-source
ECN8	395G801410LY62	HARNESS 10P-5P+4P 500/450	
ECN801	395G801412FY28	HARNESS 12P-5P 600	2nd-source
ECN801	395G801412XY28	HARNESS 12P-5P 600	
ECN21	395G801840LY27	LVDS CABLE 30P-40P 400	
ECN21	395G801840XY27	LVDS CABLE 30P-40P 400	2nd-source
	IRPFCXA3	IR BOARD	
	709T54710XM001	COMSUPTIVE ASS'Y	
	055G 23520	IPA	
CN201	033G8032 5F J	WAFER 1.25MM 5P R/A - 11.2MM	
CN201	033G8032 5F X	WAFER 1.25MM 5P R/A S1315-05RVB-S01-K	
R201	061G0603153 JF	RST 0603 15K 5% 1/10W	
R201	061G0603153 JY	RST CHIPR 15KOHM 1/10W YAGEO	
R202	061G0603221 JF	ST CHIPR 220 OHM +-5% 1/10W FENGHUA	
R203	061G0603221 JF	ST CHIPR 220 OHM +-5% 1/10W FENGHUA	
R202	061G0603221 JY	RST 0603 220R 5% 1/10W	
R203	061G0603221 JY	RST 0603 220R 5% 1/10W	
C201	065G060310432K F	CAP CHIP 0603 0.1UF K 50V X7R	
C201	065G060310432K Y	CAP 0603 100NF 10% 50V X7R	
LED201	081G 14 24 EL	CHIP LED BLUE/DARK RED	
LED201	081G 14 24 GP	CHIP LED (BR) GPTD1210BRC-D	
U201	356G0927074	HF IR RECEIVER IRM-H636M3/TR2 36 KHZ	
E715	715G5471R02000004S	IR BOARD PCB	

E715	715G5471R02000004X	IR BOARD PCB	2nd-source
	709T54710XS001	COMSUPTIVE ASS'Y	
	KEPFCXA2	KEY BOARD	
CN01	033G8032 4F X	WAFER 1.25MM 4P R/A S1315-04RVB-S01-K	
R04	061G08051001FT	RST CHIP 1K 1/8W 1%	
R03	061G08051801FY	RST CHIP R 1K8 +/-1% 1/8W	
R02	061G08052701FY	RST CHIP 2K7 1/8W 1%	
R05	061G08057500FF	RST CHIPR 750 OHM +-1% 1/8W FENGHUA	
R06	061G08057500FF	RST CHIPR 750 OHM +-1% 1/8W FENGHUA	
R07	061G08057500FF	RST CHIPR 750 OHM +-1% 1/8W FENGHUA	
R01	061G08057501FY	RST CHIP R 7K5 1/8W +/-1%	
SW05	077G 607 2 FD	CHIP TACT SW BY FORWARD SFKQGMA2125T-PL	
SW04	077G 607 2 FD	CHIP TACT SW BY FORWARD SFKQGMA2125T-PL	
SW03	077G 607 2 FD	CHIP TACT SW BY FORWARD SFKQGMA2125T-PL	
SW02	077G 607 2 FD	CHIP TACT SW BY FORWARD SFKQGMA2125T-PL	
SW01	077G 607 2 FD	CHIP TACT SW BY FORWARD SFKQGMA2125T-PL	
SW07	077G 607 2 FD	CHIP TACT SW BY FORWARD SFKQGMA2125T-PL	
SW06	077G 607 2 FD	CHIP TACT SW BY FORWARD SFKQGMA2125T-PL	
SW07	077G 607 2 HC	TACT SW 4P 1.5MM 160G TS-4402-1.58B-01	
SW06	077G 607 2 HC	TACT SW 4P 1.5MM 160G TS-4402-1.58B-01	
SW05	077G 607 2 HC	TACT SW 4P 1.5MM 160G TS-4402-1.58B-01	
SW04	077G 607 2 HC	TACT SW 4P 1.5MM 160G TS-4402-1.58B-01	
SW03	077G 607 2 HC	TACT SW 4P 1.5MM 160G TS-4402-1.58B-01	
SW02	077G 607 2 HC	TACT SW 4P 1.5MM 160G TS-4402-1.58B-01	
SW01	077G 607 2 HC	TACT SW 4P 1.5MM 160G TS-4402-1.58B-01	
CN01	311GW125D04ADJ	WAFER 1.25MM 4P R/A 1.25T-11-4PWB	
	709T52980XS001	COMSUPTIVE ASS'Y	
E715	715G5298K01000004S	KEY BOARD PCB	
E750	LCM290J1LE1A01930X	PANEL TPT290J1-LE1 C1D XM TPV	
	P12G6311010	RUBBER PAD SILICONE	
	P33E0392ADTW1L0100	KEY_FRAME	
	P33E0393ADT01L0100	KEY_FUNCTION	
	P33E0465AKZ01C0100	LENS	
	P34E11420GM03K0100	REAR_COVER	
	P34E11440GM01K0100	COVER_HINGE	
	P34E1415ADTZ1L02BA	DECO_BEZEL	
	PLTVCL246UXG4	POWER BOARD	
	040G 45762412B	OTHER LABEL	
CN801	033G3802 12 H X	WAFER 12P 2.0MM H W2011-12RVA-S01	
IC9102	056G 139 8	PHOTO-COUPLER PS2561DL1-1 CTR	

		Q100~200%	
IC9102	056G 139 9	IC EL817M(X) PHOTOCOUPLER DIP-4	
RV9901	061G 46561 WB	VARISTOR 560V 10% 14	
R8107	061G3SWJ70759B SY	RST WD 0.07R 5% 3W	
C9907	063G107M474AUM	CAP X2 470NF 20% 305V	
C9901	063G107M474AUM	CAP X2 470NF 20% 305V	
FB9104	071G 55 21 H1	BEAD 6.0*10 700R 25% BF-I60100R-706B	
FB9105	071G 55 21 H1	BEAD 6.0*10 700R 25% BF-I60100R-706B	
FB9102	071G 55906	FERRITE CORE 510R C8B R6H 6X9.2(A)	
L9902	073G 174241 X	LINE FILTER 18MH MIN EF20 3LFEF2022-303M	
L9901	073G 174241 X	LINE FILTER 18MH MIN EF20 3LFEF2022-303M	
L8101	073G 174259 CP	BOOST CHOKE 33UH 10% 2.5A L020341-6	
L9101	073G 253 91 H	IND CHOKE 3.5UH+-10% DADONG	
L9103	073G 253 91 H	IND CHOKE 3.5UH+-10% DADONG	
L9102	073G 253214 H	CHOKE COIL 47UH 10% L470R HA	
CN901	087G 50147D HC	AC SOKET R/A 2P 12DEGREE H=12.8	
BD901	093G 50460938	BRIDGE TS6B06G-05-X0 6A 800V KBJ	
	0Q1G 340 8140	SCREW Q1-SELF TAPING SCREW :Q X8.0	
CN903	311GW250B13BBX	WAFER 2.5MM 13P R/A 35MM 7MM	
RV9901	361G0046561KZW	VARISTOR 560V 10%	
NR9901	361G0058509MYW005A	NTCR 5R 20% 3.1W SCK13055MTY501	
C9145	367G215X560PKZ000S	EC 56UF 20% 450V 12.5*40	
C9144	367G215X560PKZ000S	EC 56UF 20% 450V 12.5*40	
T9101	380GL32P102N01	X'FMR 380UH 10% 5UH EFD42.9 YUVA-1986-4	
BD901	393G0050460A04	BRIDGE TS6K80-02 6A 800V KBJ	
	705TXB57842	Q9101 ASS'Y	
	0M1G 930 8120	SCREW 3X8	
Q9101	357G0667A05	MOSFET STF10N65K3 10A 650V 35W TO-220FP	
HS9101	Q90G0219 2	HEAT SINK	
	705TXC84030	F901 ASS'Y	
F901	084G 34 14	FUSE -- -- --	
F901	084G 41 3	T3.15AH250V 02153.15 LITTLEFUSE	
	705TXC93954	D9104&D9107 ASS'Y	
D9107	093G 52 57	RECTIFIER FMXA-2202S 20A 200V TO-220F	
D9104	093G1506 2	SCHOTTKY FMW-2156 15A 60V TO-220	
	0M1G1730 8120	SCREW 3X8	
Q9107	357G0600A02	MOSFET AOTF409 24A 60V 43W TO-220FL	
HS9102	Q90G0219 3	HEAT SINK	
IC9105	056G 158501	IC AS431AN-E1 SOT23	
IC8104	056G 368909	OTHERS IC TPS54231DR SO-8	
IC9101	056G 379190	AC/DC CONVERTER LD7750RGR SOP-7	
IC9901	056G 665142	OTHERS CAP004DG-TL SOP-8	
IC8501	056G 700 34	LED DRIVER PF7001S SOP-14	
Q9111	057G 417 4	PMBS3904/PHILIPS-SMT(04)	
Q9110	057G 417 6	PMBS3906/PHILIPS-SMT(06)	
Q8101	057G 600923	MOSFET AOD4126 TO-252	
Q9105	057G 763904	TRA FET 2N7002 SOT-23 PHILIPS	

Q9108	057G 763904	TRA FET 2N7002 SOT-23 PHILIPS	
R9105	061G0805100 JF	RST CHIPR 10 OHM +-5% 1/8W FENGHUA	
R8104	061G0805100 JF	RST CHIPR 10 OHM +-5% 1/8W FENGHUA	
R9202	061G08051000FY	RST CHIPR 100 OHM +-1% 1/8W YAGEO	
R9201	061G08051000FY	RST CHIPR 100 OHM +-1% 1/8W YAGEO	
R9138	061G08051003FT	RST CHIP 100K 1/8W 1%	
R9137	061G08051003FT	RST CHIP 100K 1/8W 1%	
R9154	061G0805102 JI	RST 0805 1K 5% 1/8W	
R9107	061G0805103 JT	RST 0805 10K 5% 1/8W	
R9155	061G0805103 JT	RST 0805 10K 5% 1/8W	
R9108	061G0805104 JT	RST CHIPR 100KOHM +- 5% 1/8W TZAI YUAN	
R9134	061G0805106 JT	RST CHIPR 10M +-5% 1/8W TZAI YUAN	
R9125	061G08051102FT	RST 0805 11K 1% 1/8W SMD0805011KF	
R8102	061G0805154 JF	RST CHIPR 150KOHM +-5% 1/8W FENGHUA	
R8102	061G0805154 JI	RST 0805 150K 5% 1/8W	
R8119	061G0805154 JT	RST CHIP 150K 1/8W 5% TZAI YUAN	
R8111	061G0805183 JT	RST CHIP 18K 1/8W 5%	
R9129	061G0805223 JF	RST CHIPR 22KOHM +-5% 1/8W FENGHUA	
R9129	061G0805223 JT	RST CHIP 22K 1/8W 5% TZAI YUAN	
R8105	061G0805229 JF	RST CHIPR 2R2 +-5% 1/8W FENGHUA	
R9151	061G08052491FT	RST CHIP 2K49 1/8W 1%	
R9143	061G08052702FT	RST CHIP 27K 1/8W 1%	
R9148	061G08053001FI	RST CHIPR 3KOHM +-1% 1/8W 0805	
R9144	061G08053001FT	RST CHIP R 3K 1/8W +/-1%	
R9169	061G0805331 JT	RST CHIP 330R 1/8W 5% TZAI YUAN	
R9170	061G0805331 JT	RST CHIP 330R 1/8W 5% TZAI YUAN	
R8108	061G0805331 JT	RST CHIP 330R 1/8W 5% TZAI YUAN	
R9126	061G0805333 JI	RST CHIPR 33KOHM +-5% 1/8W 0805	
R9157	061G0805333 JT	RST CHIP 33K 1/8W 5% TZAI YUAN	
R9119	061G0805334 JF	RST CHIPR 330KOHM +-5% 1/8W FENGHUA	
R9119	061G0805334 JT	RST CHIP 330K 1/8W 5% TZAI YUAN	
R9118	061G08053902FF	RST CHIPR 39KOHM +-1% 1/8W FENGHUA	
R9118	061G08053902FT	RST CHIP 39K 1/8W 1%	
R9139	061G0805392 JF	RST CHIPR 3.9KOHM +-5% 1/8W FENGHUA	
R8117	061G08054301FY	RST CHIPR 4K3 +-1% 1/8W YAGEO	
R9106	061G0805470 JT	RST CHIPR 47OHM +-5% 1/8W TZAI YUAN	
R9156	061G08054702FF	RST CHIPR 47KOHM +-1% 1/8W FENGHUA	
R9109	061G0805471 JT	RST CHIPR 470OHM +-5% 1/8W TZAI YUAN	
R8101	061G08055102FI	RST 51K OHM 1% 1/8W TA-I	
R9133	061G0805514 JT	RST CHIPR 510K +-5% 1/8W TZAI YUAN	
R9140	061G0805562 JF	RST CHIPR 5.6KOHM +-5% 1/8W FENGHUA	
R9146	061G08057501FT	RST CHIP R 7K5 1/8W +/-1%	
R9146	061G08057501FY	RST CHIP R 7K5 1/8W +/-1%	
R9117	061G0805751 JF	RST CHIPR 750 OHM +-5% 1/8W FENGHUA	
R9145	061G0805911 JF	RST CHIPR 910 OHM +-5% 1/8W FENGHUA	
JR9102	061G1206000 JF	RST CHIPR MAX0R05 1/4W FENGHUA	
JR9104	061G1206000 JF	RST CHIPR MAX0R05 1/4W FENGHUA	

JR9103	061G1206000 JF	RST CHIPR MAX0R05 1/4W FENGHUA	
JR9105	061G1206000 JF	RST CHIPR MAX0R05 1/4W FENGHUA	
R9161	061G1206000 JI	RST 1206 MAX0R05 5% 1/4W	
R8103	061G1206000 JI	RST 1206 MAX0R05 5% 1/4W	
R9110	061G1206100 JF	RST CHIPR 10 OHM +-5% 1/4W FENGHUA	
R8116	061G12061003FI	RST 1206 100K 1% 1/4W	
R8110	061G12061003FI	RST 1206 100K 1% 1/4W	
R9158	061G1206101 JI	RST 1206 100R 5% 1/4W	
R9160	061G1206101 JI	RST 1206 100R 5% 1/4W	
R8106	061G1206103 JT	RST CHIPR 10KOHM +-5% 1/4W TZAI YUAN	
R8113	061G12061809FT	RST 1206 18R 1% 1/4W	
R9150	061G12062003FF	RST CHIPR 200KOHM +-1% 1/4W FENGHUA	
R9150	061G12062003FT	RST CHIPR 200KOHM +-1% 1/4W TZAI YUAN	
R9147	061G1206202 JI	RST 2K OHM 5% 1/4W TA-I	
R9120	061G1206221 JT	RST CHIPR 220 OHM +-5% 1/4W TZAI YUAN	
R9121	061G1206221 JT	RST CHIPR 220 OHM +-5% 1/4W TZAI YUAN	
R9122	061G1206221 JT	RST CHIPR 220 OHM +-5% 1/4W TZAI YUAN	
R9112	061G1206339 JT	RST CHIPR 3.3 OHM +-5% 1/4W TZAI YUAN	
R9116	061G1206470 JT	RST CHIPR 47 OHM +-5% 1/4W TZAI YUAN	
R9114	061G1206470 JT	RST CHIPR 47 OHM +-5% 1/4W TZAI YUAN	
R9115	061G1206470 JT	RST CHIPR 47 OHM +-5% 1/4W TZAI YUAN	
R9153	061G1206471 JI	RST 470 OHM 5% 1/4W TA-I	
R9113	061G1206519 JT	RST CHIPR 5.1 OHM +-5% 1/4W TZAI YUAN	
R9103	061G1206682 JT	RST CHIPR 6.8 KOHM +-5% 1/4W TZAI YUAN	
R9101	061G1206682 JT	RST CHIPR 6.8 KOHM +-5% 1/4W TZAI YUAN	
R9102	061G1206682 JT	RST CHIPR 6.8 KOHM +-5% 1/4W TZAI YUAN	
C9138	065G080510131J F	CAP CHIP 0805 100PF J 50V NPO	
C8110	065G080510231J F	CAP 0805 1NF 5% 50V NPO	
C9150	065G080510231J F	CAP 0805 1NF 5% 50V NPO	
C8117	065G080510231J F	CAP 0805 1NF 5% 50V NPO	
C9149	065G080510231J F	CAP 0805 1NF 5% 50V NPO	
C8118	065G080510231J F	CAP 0805 1NF 5% 50V NPO	
C8110	065G080510231J M	CAP 0805 1NF 5% 50V NP0	
C9150	065G080510231J M	CAP 0805 1NF 5% 50V NP0	
C8117	065G080510231J M	CAP 0805 1NF 5% 50V NP0	
C8118	065G080510231J M	CAP 0805 1NF 5% 50V NP0	
C9149	065G080510231J M	CAP 0805 1NF 5% 50V NP0	
C9124	065G080510232K F	CAP 0805 1000PF 10% 50V X7R	
C9130	065G080510232K Y	CAP CHIP 0805 1N 50V X7R +/-10%	
C9128	065G080510232K Y	CAP CHIP 0805 1N 50V X7R +/-10%	
C8108	065G080510332K Y	CAP CHIP 0805 10N 50V X7R +/-10%	
C8114	065G080510332K Y	CAP CHIP 0805 10N 50V X7R +/-10%	
C9109	065G080510332K Y	CAP CHIP 0805 10N 50V X7R +/-10%	
C8109	065G080510432K F	CAP CHIP 0805 0.1UF K 50V X7R	
C8105	065G080510432K F	CAP CHIP 0805 0.1UF K 50V X7R	
C8104	065G080510432K F	CAP CHIP 0805 0.1UF K 50V X7R	
C9106	065G080510432K F	CAP CHIP 0805 0.1UF K 50V X7R	

C9118	065G080510432K F	CAP CHIP 0805 0.1UF K 50V X7R	
C9127	065G080510432K Y	CAP CHIP 0805 100N 50V X7R +/-10%	
C9105	065G080510432K Y	CAP CHIP 0805 100N 50V X7R +/-10%	
C9112	065G080510432K Y	CAP CHIP 0805 100N 50V X7R +/-10%	
C9117	065G080510432K Y	CAP CHIP 0805 100N 50V X7R +/-10%	
C9132	065G080510432K Y	CAP CHIP 0805 100N 50V X7R +/-10%	
C9134	065G080510432K Y	CAP CHIP 0805 100N 50V X7R +/-10%	
C9115	065G080510432K Y	CAP CHIP 0805 100N 50V X7R +/-10%	
C9133	065G080510432K Y	CAP CHIP 0805 100N 50V X7R +/-10%	
C8103	065G080510532K M	CAP 0805 1UF 10% 50V X7R	
C9114	065G080510532K M	CAP 0805 1UF 10% 50V X7R	
C9147	065G080510532K M	CAP 0805 1UF 10% 50V X7R	
C9123	065G080515332K Y	CAP CHIP 0805 15N 50V X7R +/-10%	
C9121	065G080522232K Y	CAP CHIP 0805 2N2 50V X7R +/-10%	
C9110	065G080522232K Y	CAP CHIP 0805 2N2 50V X7R +/-10%	
C9122	065G080522522K M	CAP 0805 2.2UF 10% 25V X7R	
C9108	065G080547131J Y	CAP CHIP 0805 470P 50V NPO +/-5%	
C9125	065G1206102B2K Y	CAP 1206 1NF 10% 630V X7R -	
C9148	065G1206102B2K Y	CAP 1206 1NF 10% 630V X7R -	
D8108	093G 64 33	SWITCHING BAV99 0.2A 85V SOT-23	
D8107	093G 64 33	SWITCHING BAV99 0.2A 85V SOT-23	
D8106	093G 64 33	SWITCHING BAV99 0.2A 85V SOT-23	
D8105	093G 64 33	SWITCHING BAV99 0.2A 85V SOT-23	
D8102	093G 60S 15 T	SCHOTTKY RB160M 60 TR 1A 60V SOD-123	
D9105	093G 60S 15 T	SCHOTTKY RB160M 60 TR 1A 60V SOD-123	
D9109	093G 60S 15 T	SCHOTTKY RB160M 60 TR 1A 60V SOD-123	
D9108	093G 60S 15 T	SCHOTTKY RB160M 60 TR 1A 60V SOD-123	
D9106	093G 60S935 T HF	SCHOTTKY SK34A R2G 3A 40V DO-214AC	
D9106	093G3004 3	SM340A	
R8138	361G12061249FF	RST 1206 12.4R 1% 1/4W RS-06K12R4FT	
R8127	361G12061249FF	RST 1206 12.4R 1% 1/4W RS-06K12R4FT	
R8132	361G12061249FF	RST 1206 12.4R 1% 1/4W RS-06K12R4FT	
R8121	361G12061249FF	RST 1206 12.4R 1% 1/4W RS-06K12R4FT	
R8139	361G12061249FF	RST 1206 12.4R 1% 1/4W RS-06K12R4FT	
R8128	361G12061249FF	RST 1206 12.4R 1% 1/4W RS-06K12R4FT	
R8136	361G12061249FF	RST 1206 12.4R 1% 1/4W RS-06K12R4FT	
R8137	361G12061249FF	RST 1206 12.4R 1% 1/4W RS-06K12R4FT	
R8126	361G12061249FF	RST 1206 12.4R 1% 1/4W RS-06K12R4FT	
R8121	361G12061249FT	RST 1206 12.4R 1% 1/4W SMD120612R4F	
R8126	361G12061249FT	RST 1206 12.4R 1% 1/4W SMD120612R4F	
R8137	361G12061249FT	RST 1206 12.4R 1% 1/4W SMD120612R4F	
R8136	361G12061249FT	RST 1206 12.4R 1% 1/4W SMD120612R4F	
R8128	361G12061249FT	RST 1206 12.4R 1% 1/4W SMD120612R4F	
R8138	361G12061249FT	RST 1206 12.4R 1% 1/4W SMD120612R4F	
R8127	361G12061249FT	RST 1206 12.4R 1% 1/4W SMD120612R4F	
R8132	361G12061249FT	RST 1206 12.4R 1% 1/4W SMD120612R4F	
R8139	361G12061249FT	RST 1206 12.4R 1% 1/4W SMD120612R4F	

C9146	365G1206681B1J000M	CONSIGN CAP 1206 680PF 5% 630V NP0	
C9146	365G1206681B1J000Y	CAP 1206 680PF 5% 630V NP0	
D8101	393G0060A11	HF SCHOTTKY MBRD10150D 10A 150V TO-252	
D8101	393G0060A14	SCHOTTKY SM10150D1-C 10A 150V (D-PACK)	
ZD9103	393G039S95200T00HF	HF BZT52-B6V2_R1_00001 6.2V 0.41W	
ZD9104	393G039S95300T00HF	HF BZT52-B9V1_R1_00001 9.1V 0.41W	
ZD9107	393G039SA1300T	ZENER BZT52-B39_R1_00001 39V 0.41W	
ZD9105	393G039SA1400T	ZENER BZT52-B16_R1_00001 16V 0.41W	
D9102	393G060S93400T00HF	HF SS0520_R1_00001 0.5A 20V SOD-123	
D9110	393G060S93400T00HF	HF SS0520_R1_00001 0.5A 20V SOD-123	
T9101	006G 31 4	1.7MM RIVET	
BD901	006G 31 4	1.7MM RIVET	
CN901	006G 31500	EYELET	
L9901	006G 31502	EYELET	
L9902	006G 31502	EYELET	
RV9901	006G 31502	EYELET	
NR9901	006G 31502	EYELET	
C9144	006G 31502	EYELET	
C9901	006G 31502	EYELET	
C9907	006G 31502	EYELET	
C9145	006G 31502	EYELET	
IC9103	056G 158 12	SHUNT REGULATOR KIA431A-AT/P TO-92	
Q8109	057G 417513 T	TRA 2N3904 TO-92	
Q8112	057G 417513 T	TRA 2N3904 TO-92	
Q8108	057G 417513 T	TRA 2N3904 TO-92	
Q8114	057G 417513 T	TRA 2N3904 TO-92	
Q8111	057G 417513 T	TRA 2N3904 TO-92	
Q8103	057G 417513 T	TRA 2N3904 TO-92	
Q8115	057G 417513 T	TRA 2N3904 TO-92	
Q8113	057G 417513 T	TRA 2N3904 TO-92	
Q8102	057G 417513 T	TRA 2N3904 TO-92	
Q8110	057G 417513 T	TRA 2N3904 TO-92	
R8118	061G 60210552T TZ	RST CFR 1M 1/6W 5%	
R9111	061G152M24852T SY	RST MOFR 0.24OHM +-5% 2WS SY	
R9104	061G152M82352T SY	RST MOFR 82KOHM +-5% 2WS FUTABA	
R9159	061G208M10052T SY	RST MOF 10R 5% 1W	
R9901	061G212Y39452T SY	RST MGF 390K 5% 1/2W RMU12J3903A520NL	
R9903	061G212Y39452T SY	RST MGF 390K 5% 1/2W RMU12J3903A520NL	
C8106	065G 1K10223T	CAP CER 1NF 10% 1KV Y5P	
C9104	065G 1K22293S	CAP CER 2.2NF 10% 1KV R TAPING	
C9119	065G 1K470 2T6921	CAP CER 47PF K 1KV	
C9906	065G 1K470 2T6921	CAP CER 47PF K 1KV	
C8116	065G 1K470 2T6921	CAP CER 47PF K 1KV	
C8115	065G 1K470 2T6921	CAP CER 47PF K 1KV	
C9905	065G306K10123R	CAP Y1 100PF 10% 250V Y5P	
C9903	065G306K10123R	CAP Y1 100PF 10% 250V Y5P	
C9905	065G306K1012SR	CAP Y1 100PF 10% 250V Y5P	

C9903	065G306K1012SR	CAP Y1 100PF 10% 250V Y5P	
C9316	065G306K22123R	CAP Y1 220PF 10% 250V Y5P	
C9316	065G306K2212SR	CAP Y1 220PF 10% 250V Y5P	
C9902	065G306K33123R	CAP Y1 330PF 10% 250V Y5P	
C9904	065G306K33123R	CAP Y1 330PF 10% 250V Y5P	
C9902	065G306K3312SR	CAP Y1 330PF 10% 250V Y5P	
C9904	065G306K3312SR	CAP Y1 330PF 10% 250V Y5P	
C9315	065G306M1023SR	CAP Y1 1NF 20% 250V Y5U	
C9107	067G 3154707KT	EC 47UF 20% 50V ER1H470MPN1007RU	
C8113	067G 5151018KT	EC 100UF 20% 63V EV1J101MPN1012RSU	
C8102	067G 5151018KT	EC 100UF 20% 63V EV1J101MPN1012RSU	
C8101	067G 5153316KT	EC 330UF 20% 35V 10*12 5000 HR	
C9120	067G 5153316KT	EC 330UF 20% 35V 10*12 5000 HR	
C9113	067G 5154713KT	EC 470 20% 16V EV	
C9111	067G204S3313KT	CAP CS 330UF 20% 16V 10*7 2000 HR	
C9116	067G215P2714KT	EC 270UF 20% 25V 10*9	
C9131	067G515S4716KT	EC 470UF 20% 35V 12.5*12 EC EC1V471MPN	
ZD9106	093G 3918652T	TVS P6KE27A 27V 100A 600W DO15	
ZD9101	093G 3995552T	DIODE GDZJ27B DO-35	
D9101	093G110050152T	DIODE PR1007 1A/1000V 500NS DO-41	
D9103	093G110050152T	DIODE PR1007 1A/1000V 500NS DO-41	
J9110	095G 90 23	JUMP WIRE - -	
J9111	095G 90 23	JUMP WIRE - -	
J8107	095G 90 23	JUMP WIRE - -	
J9105	095G 90 23	JUMP WIRE - -	
J9113	095G 90 23	JUMP WIRE - -	
J9108	095G 90 23	JUMP WIRE - -	
J8101	095G 90 23	JUMP WIRE - -	
J9116	095G 90 23	JUMP WIRE - -	
J8102	095G 90 23	JUMP WIRE - -	
J8110	095G 90 23	JUMP WIRE - -	
J9101	095G 90 23	JUMP WIRE - -	
J9103	095G 90 23	JUMP WIRE - -	
J8111	095G 90 23	JUMP WIRE - -	
J8108	095G 90 23	JUMP WIRE - -	
J8106	095G 90 23	JUMP WIRE - -	
J8103	095G 90 23	JUMP WIRE - -	
J9114	095G 90 23	JUMP WIRE - -	
J8105	095G 90 23	JUMP WIRE - -	
J9106	095G 90 23	JUMP WIRE - -	
J9102	095G 90 23	JUMP WIRE - -	
J9104	095G 90 23	JUMP WIRE - -	
J9112	095G 90 23	JUMP WIRE - -	
J8104	095G 90 23	JUMP WIRE - -	
J9109	095G 90 23	JUMP WIRE - -	
J9115	095G 90 23	JUMP WIRE - -	
J8109	095G 90 23	JUMP WIRE - -	

J9107	095G 90 23	JUMP WIRE - -	
FB9106	095G 90 23	JUMP WIRE - -	
FB9101	095G 90 23	JUMP WIRE - -	
FB9103	095G 90 23	JUMP WIRE - -	
SG902	362G0010501MIT	SPARK GAP 500V -20/+30%	
SG901	362G0010501MIT	SPARK GAP 500V -20/+30%	
C9126	363G213K2224TA	CAP DMPE 2.2NF 10% 630V RSBPC1220SH00K	
C9140	367G415X3317KT	EC 330UF 20% 50V 12.5*12	
C9141	367G415X3317KT	EC 330UF 20% 50V 12.5*12	
C9142	367G415X3317KT	EC 330UF 20% 50V 12.5*12	
C9143	367G415X3317KT	EC 330UF 20% 50V 12.5*12	
E715	715G5508P01001002M	POWER BOARD PCB	
HS9103	Q85T0205101	SHIELD 13*30	
	Q02G7059001001	NUT	
	Q02G7060001001	BOLT	
	Q11G701017000L00ZL	PCB-SUPPORT PA66 YES 94V-V0	
	Q36T 600 18121	NONWOVEN FABRTC	
	Q40G000200132B	OTHER LABEL FOR ENERGY-SAVING PRODUCTS	
	Q45G 77 5	PE PACKING	
	Q45G99010TV03900WN	PROTECT BAG	
	Q50G 4 10	TIE (Y1900221)	
	Q50G 500 TV005	CABLE TIE	
	Q52G1301 9	BIG TAPE FOR PHILIPS	
	Q52G1501 TV 7 W	INSULATING SHEET	
	Q52G1501150523 W	INSULATING PLATE	
	Q52G18010TV056	TAPE_INSULATING	
	X15T8389401000GMZ1	BKT_BTM	
	X15T8390101000GMZ1	BKT_IO	
	X15T839120200000BL	BKT_STAND	
	X37T804002400000G1	STAND-BASE ASS'Y	
	X37T8040024000B1G1	BASE_ASS'Y	
	X37T8040024000B2G1	STAND ASS'Y	
	X40G2012029X0100XY	LABEL SIDE	
	X40G2012029X0400XY	LABEL IO	
	X44GGA0181301B	ARTWORK CARTON 29PFL3330/T3	
	X44GGA031010SY	CUSHION-T	
	X44GGA032010SY	CUSHION-B	
	X52G1801 TVX40	INSULATING SHEET	
E08901	089G214A15N HL	AC POWER CORD 1500MM	2nd-source
E08901	089G214A15N JR	AC POWER CORD 1500 FOR CHINA	
	092GB1JX1A3DGC	BATTERY 1.5V BATTERY FOR LR03	
E098	098GR7BD4NCPHJ	REMOTE PHILIPS RC-B6070-420	
E098	098GR7BD4NCPHT	REMOTE CONTROL PHILIPS YKF230-029	
	317GARFM006CHH	RF MODULE CBIP-X	
	Q45G8801 TV005	PE PACKINGX358X250X0.04	
	X41G32MV81336C	MANUAL 3330 DFU	

	X41G78SV81371C	QSG 3330 QSG	
	040G 58162435A	MANUAL P/N LABEL	
	X40G000162416A	OTHER LABEL --CEL LABEL G1 1.9	
	X40G000181321A	CARTON LABEL -合并 SN LABEL	

32PFL3330/T3 E32C11NDCTP1NNX

点位	组件	对象描述	备注
ECN8	395G801410XY13	HARNESS 10P-5P+4P 500/550MM	
	052G 1186	SMALL TAPE	
	052G 2191 A	PAPER TAPE	
	0M1G1030 6 47 CR3	SCREW	
	0M1G1030 8 47 CR3	SCREW	
	0M1G1730 6120	SCREW 3X6	
	0M1G1730 6120	SCREW 3X6	
	0M1G1730 6120	SCREW 3X6	
	0M1G1730 6120	SCREW 3X6	
	0M1G1730 6120	SCREW 3X6	
	0M1G1740 8120	SCREW FOR STD/MF 42-D020715/42-D000649()	
	0Q1G 930 8 47 CR3	SCREW	
	0Q1G1030 10 47 CR3	SCREW	
	0Q1G1030 10 47 CR3	SCREW	
	317GAAMB058CVT	MAIN BOARD T.VST59S.72A	
	IRPFCXA3	IR BOARD	
	709T54710XM001	COMSUPTIVE ASS'Y	
	055G 23520	IPA	
CN201	033G8032 5F HR	CONNECTOR	
R201	061G0603153 JY	RST CHIPR 15KOHM 1/10W YAGEO	
R202	061G0603221 JF	ST CHIPR 220 OHM +-5% 1/10W FENGHUA	
C201	065G060310432K F	CAP CHIP 0603 0.1UF K 50V X7R	
U201	356G0927074	HF IR RECEIVER IRM-H636M3/TR2 36 KHZ	
E715	715G5471R01000004B	IR BOARD PCB	
E715	715G5471R01000004I	IR BOARD PCB	2nd-source
LED201	081G 14 24 EL	CHIP LED BLUE/DARK RED	
R203	061G0603221 JF	ST CHIPR 220 OHM +-5% 1/10W FENGHUA	
	709T54710XS001	COMSUPTIVE ASS'Y	
	KEPFCXA2	KEY BOARD	
CN01	033G8032 4F B	CONN 1.25MM 4P R/A 9.95MM 5.7MM	
CN01	033G8032 4F X	WAFER 4P 1.25MM	
R04	061G08051001FT	RST CHIP 1K 1/8W 1%	
R03	061G08051801FY	RST CHIP R 1K8 +/-1% 1/8W	
R02	061G08052701FY	RST CHIP 2K7 1/8W 1%	
R05	061G08057500FF	RST CHIPR 750 OHM +-1% 1/8W FENGHUA	
R06	061G08057500FF	RST CHIPR 750 OHM +-1% 1/8W FENGHUA	
R07	061G08057500FF	RST CHIPR 750 OHM +-1% 1/8W FENGHUA	
R01	061G08057501FY	RST CHIP R 7K5 1/8W +/-1%	
SW06	077G 607 2 FD	CHIP TACT SW BY FORWARD SFKQGMA2125T-PL	
SW07	077G 607 2 FD	CHIP TACT SW BY FORWARD SFKQGMA2125T-PL	
SW01	077G 607 2 FD	CHIP TACT SW BY FORWARD SFKQGMA2125T-PL	

SW02	077G 607 2 FD	CHIP TACT SW BY FORWARD SFKQGMA2125T-PL	
SW03	077G 607 2 FD	CHIP TACT SW BY FORWARD SFKQGMA2125T-PL	
SW04	077G 607 2 FD	CHIP TACT SW BY FORWARD SFKQGMA2125T-PL	
SW05	077G 607 2 FD	CHIP TACT SW BY FORWARD SFKQGMA2125T-PL	
SW07	077G 607 2 HC	TACT SW 4P 1.5MM 160G TS-4402-1.58B-01	
SW03	077G 607 2 HC	TACT SW 4P 1.5MM 160G TS-4402-1.58B-01	
SW04	077G 607 2 HC	TACT SW 4P 1.5MM 160G TS-4402-1.58B-01	
SW05	077G 607 2 HC	TACT SW 4P 1.5MM 160G TS-4402-1.58B-01	
SW06	077G 607 2 HC	TACT SW 4P 1.5MM 160G TS-4402-1.58B-01	
SW01	077G 607 2 HC	TACT SW 4P 1.5MM 160G TS-4402-1.58B-01	
SW02	077G 607 2 HC	TACT SW 4P 1.5MM 160G TS-4402-1.58B-01	
	709T52980XS001	COMSUPTIVE ASS'Y	
E715	715G5298K01000004S	KEY BOARD PCB	
E750	LCV315TU4AXA08011X	PANEL TPT315B5-TU4A R00A XM TPV	
	P12G6311010	RUBBER PAD SILICONE	
	P15T1414C01000GMZ1	BKT_IO	
	P15T1442F01000GMZ1	BKT_IO	
	P15T1619101	BKT_HINGE SGCC 1.2 MM	
	P33E0359ADTZ1L01BA	COVER_FUNCTION	
	P33E0361ADT01L0100	KEY	
	P34E10810GM09K0100	REAR_COVER	
	P34E10840GM01K0100	COVER_HINGE	
	PLTVCL246AXRH	POWER BOARD	
	040G 45762412B	CBPC LABEL	
CN801	033G3802 12 H X	WAFER 12P 2.0MM H W2011-12RVA-S01	
IC9102	056G 139 8	PHOTO-COUPLER PS2561DL1-1 CTR Q100~200%	
RV9901	061G 46561 WB	VARISTOR 560V 10% 14	
NR9901	061G 58509MEW	NTCR 5R 5A SCK13055MMY506	
R8107	061G3SWJ70759B SY	RST WD 0.07R 5% 3W	
C9901	063G107M474AUM	CAP X2 470NF 20% 305V	
C9907	063G107M474AUM	CAP X2 470NF 20% 305V	
FB9105	071G 55 21 H1	BEAD 6.0*10 700R 25% BF-I60100R-706B	
FB9104	071G 55 21 H1	BEAD 6.0*10 700R 25% BF-I60100R-706B	
FB9102	071G 55906	FERRITE CORE 510R C8B R6H 6X9.2(A)	
L9902	073G 174241 X	LINE FILTER 18MH MIN EF20 3LFEF2022-303M	
L9901	073G 174241 X	LINE FILTER 18MH MIN EF20 3LFEF2022-303M	
L8101	073G 174259 CP	BOOST CHOKE 33UH 10% 2.5A L020341-6	
L9101	073G 253 91 H	IND CHOKE 3.5UH+-10% DADONG	
L9103	073G 253 91 H	IND CHOKE 3.5UH+-10% DADONG	
L9102	073G 253214 H	CHOKE COIL 47UH 10% L470R HA	
CN901	087G 50147D HC	AC SOKET R/A 2P 12DEGREE H=12.8	
BD901	093G 50460938	BRIDGE TS6B06G-05-X0 6A 800V KBJ	

	0Q1G 340 8140	SCREW Q1-SELF TAPING SCREW :Q X8.0	
CN903	311GW250B13BBX	WAFER 2.5MM 13P R/A 35MM 7MM	
C9145	367G215X560PKZ000S	EC 56UF 20% 450V 12.5*40	
C9144	367G215X560PKZ000S	EC 56UF 20% 450V 12.5*40	
T9101	380GL32P102N00	X'FMR 320UH 10% 5UH YUVA-1986-3	
	705TXB57842	Q9101 ASS'Y	
	0M1G 930 8120	SCREW 3X8	
Q9101	357G0667A05	MOSFET STF10N65K3 10A 650V 35W TO-220FP	
HS9101	Q90G0219 2	HEAT SINK	
	705TXB84979	F901 ASS'Y	
F901	084G 34 14	FUSE CLIP 5*20MM	
F901	084G 41 3	T3.15AH250V 02153.15 LITTLEFUSE	
	705TXB93605	D9104&D9107 ASS'Y	
D9107	093G 52 57	RECTIFIER FMXA-2202S 20A 200V TO-220F	
D9104	093G1506 2	SCHOTTKY FMW-2156 15A 60V TO-220	
	0M1G1730 8120	SCREW 3X8	
Q9107	357G0600979	MOSFET P1604ETF 40A 40V 42W TO-220F	
HS9102	Q90G0219 3	HEAT SINK	
IC9105	056G 158501	IC AS431AN-E1 SOT23	
IC8104	056G 368909	OTHERS IC TPS54231DR SO-8	
IC9101	056G 379190	AC/DC CONVERTER LD7750RGR SOP-7	
IC9901	056G 665142	OTHERS CAP004DG-TL SOP-8	
IC8501	056G 700 34	LED DRIVER PF7001S SOP-14	
Q9111	057G 417 4	PMBS3904/PHILIPS-SMT(04)	
Q9110	057G 417 6	PMBS3906/PHILIPS-SMT(06)	
Q8101	057G 600923	MOSFET AOD4126 TO-252	
Q9105	057G 763904	TRA FET 2N7002 SOT-23 PHILIPS	
Q9108	057G 763904	TRA FET 2N7002 SOT-23 PHILIPS	
R9105	061G0805100 JF	RST CHIPR 10 OHM +-5% 1/8W FENGHUA	
R8104	061G0805100 JF	RST CHIPR 10 OHM +-5% 1/8W FENGHUA	
R9202	061G08051000FY	RST CHIPR 100 OHM +-1% 1/8W YAGEO	
R9201	061G08051000FY	RST CHIPR 100 OHM +-1% 1/8W YAGEO	
R9137	061G08051003FT	RST CHIP 100K 1/8W 1%	
R9138	061G08051003FT	RST CHIP 100K 1/8W 1%	
R9154	061G0805102 JI	RST 0805 1K 5% 1/8W	
R9107	061G0805103 JT	RST 0805 10K 5% 1/8W	
R9129	061G0805103 JT	RST 0805 10K 5% 1/8W	
R9155	061G0805103 JT	RST 0805 10K 5% 1/8W	
R9108	061G0805104 JT	RST CHIPR 100KOHM +- 5% 1/8W TZAI YUAN	
R9134	061G0805106 JT	RST CHIPR 10M +-5% 1/8W TZAI YUAN	
R9125	061G08051102FT	RST 0805 11K 1% 1/8W SMD0805011KF	
R9146	061G08051501FF	RST CHIPR 1.5KOHM +-1% 1/8W FENGHUA	
R8102	061G0805154 JF	RST CHIPR 150KOHM +-5% 1/8W FENGHUA	
R8102	061G0805154 JI	RST 0805 150K 5% 1/8W	
R8119	061G0805154 JT	RST CHIP 150K 1/8W 5% TZAI YUAN	
R8111	061G0805183 JT	RST CHIP 18K 1/8W 5%	
R8105	061G0805229 JF	RST CHIPR 2R2 +-5% 1/8W FENGHUA	

R9151	061G08052431FY	RST CHIP 2K43 1/8W 1%	
R9143	061G08052702FT	RST CHIP 27K 1/8W 1%	
R9148	061G08053001FI	RST CHIPR 3KOHM +-1% 1/8W 0805	
R9144	061G08053001FT	RST CHIP R 3K 1/8W +/-1%	
R9169	061G0805331 JT	RST CHIP 330R 1/8W 5% TZAI YUAN	
R8108	061G0805331 JT	RST CHIP 330R 1/8W 5% TZAI YUAN	
R9170	061G0805331 JT	RST CHIP 330R 1/8W 5% TZAI YUAN	
R9126	061G0805333 JI	RST CHIPR 33KOHM +-5% 1/8W 0805	
R9157	061G0805333 JT	RST CHIP 33K 1/8W 5% TZAI YUAN	
R9119	061G0805334 JF	RST CHIPR 330KOHM +-5% 1/8W FENGHUA	
R9119	061G0805334 JT	RST CHIP 330K 1/8W 5% TZAI YUAN	
R9118	061G08053902FF	RST CHIPR 39KOHM +-1% 1/8W FENGHUA	
R9118	061G08053902FT	RST CHIP 39K 1/8W 1%	
R9139	061G0805392 JF	RST CHIPR 3.9KOHM +-5% 1/8W FENGHUA	
R8117	061G08054301FY	RST CHIPR 4K3 +-1% 1/8W YAGEO	
R9106	061G0805470 JT	RST CHIPR 47OHM +-5% 1/8W TZAI YUAN	
R9156	061G08054702FF	RST CHIPR 47KOHM +-1% 1/8W FENGHUA	
R9109	061G0805471 JT	RST CHIPR 470OHM +-5% 1/8W TZAI YUAN	
R8101	061G08055102FI	RST 51K OHM 1% 1/8W TA-I	
R9133	061G0805514 JT	RST CHIPR 510K +-5% 1/8W TZAI YUAN	
R9140	061G0805562 JF	RST CHIPR 5.6KOHM +-5% 1/8W FENGHUA	
R9117	061G0805751 JF	RST CHIPR 750 OHM +-5% 1/8W FENGHUA	
R9145	061G0805911 JF	RST CHIPR 910 OHM +-5% 1/8W FENGHUA	
JR9105	061G1206000 JF	RST CHIPR MAX0R05 1/4W FENGHUA	
JR9103	061G1206000 JF	RST CHIPR MAX0R05 1/4W FENGHUA	
JR9104	061G1206000 JF	RST CHIPR MAX0R05 1/4W FENGHUA	
JR9102	061G1206000 JF	RST CHIPR MAX0R05 1/4W FENGHUA	
R8103	061G1206000 JI	RST 1206 MAX0R05 5% 1/4W	
R9161	061G1206000 JI	RST 1206 MAX0R05 5% 1/4W	
R9110	061G1206100 JF	RST CHIPR 10 OHM +-5% 1/4W FENGHUA	
R8110	061G12061003FI	RST 1206 100K 1% 1/4W	
R8116	061G12061003FI	RST 1206 100K 1% 1/4W	
R9160	061G1206101 JI	RST 1206 100R 5% 1/4W	
R9158	061G1206101 JI	RST 1206 100R 5% 1/4W	
R8106	061G1206103 JT	RST CHIPR 10KOHM +-5% 1/4W TZAI YUAN	
R8113	061G12061809FT	RST 1206 18R 1% 1/4W	
R9150	061G12062003FF	RST CHIPR 200KOHM +-1% 1/4W FENGHUA	
R9150	061G12062003FT	RST CHIPR 200KOHM +-1% 1/4W TZAI YUAN	
R9147	061G1206202 JI	RST 2K OHM 5% 1/4W TA-I	
R9122	061G1206221 JT	RST CHIPR 220 OHM +-5% 1/4W TZAI YUAN	
R9120	061G1206221 JT	RST CHIPR 220 OHM +-5% 1/4W TZAI YUAN	
R9121	061G1206221 JT	RST CHIPR 220 OHM +-5% 1/4W TZAI YUAN	
R9112	061G1206339 JT	RST CHIPR 3.3 OHM +-5% 1/4W TZAI YUAN	
R9115	061G1206470 JT	RST CHIPR 47 OHM +-5% 1/4W TZAI YUAN	
R9116	061G1206470 JT	RST CHIPR 47 OHM +-5% 1/4W TZAI YUAN	
R9114	061G1206470 JT	RST CHIPR 47 OHM +-5% 1/4W TZAI YUAN	
R9153	061G1206471 JI	RST 470 OHM 5% 1/4W TA-I	

R9113	061G1206519 JT	RST CHIPR 5.1 OHM +-5% 1/4W TZAI YUAN	
R9101	061G1206682 JT	RST CHIPR 6.8 KOHM +-5% 1/4W TZAI YUAN	
R9103	061G1206682 JT	RST CHIPR 6.8 KOHM +-5% 1/4W TZAI YUAN	
R9102	061G1206682 JT	RST CHIPR 6.8 KOHM +-5% 1/4W TZAI YUAN	
C9138	065G080510131J F	CAP CHIP 0805 100PF J 50V NPO	
C8110	065G080510231J F	CAP 0805 1NF 5% 50V NPO	
C8118	065G080510231J F	CAP 0805 1NF 5% 50V NPO	
C8117	065G080510231J F	CAP 0805 1NF 5% 50V NPO	
C9149	065G080510231J F	CAP 0805 1NF 5% 50V NPO	
C9150	065G080510231J F	CAP 0805 1NF 5% 50V NPO	
C9149	065G080510231J M	CAP 0805 1NF 5% 50V NP0	
C8110	065G080510231J M	CAP 0805 1NF 5% 50V NP0	
C9150	065G080510231J M	CAP 0805 1NF 5% 50V NP0	
C8117	065G080510231J M	CAP 0805 1NF 5% 50V NP0	
C8118	065G080510231J M	CAP 0805 1NF 5% 50V NP0	
C9124	065G080510232K F	CAP 0805 1000PF 10% 50V X7R	
C9130	065G080510232K Y	CAP CHIP 0805 1N 50V X7R +/-10%	
C8108	065G080510332K Y	CAP CHIP 0805 10N 50V X7R +/-10%	
C8114	065G080510332K Y	CAP CHIP 0805 10N 50V X7R +/-10%	
C9118	065G080510432K F	CAP CHIP 0805 0.1UF K 50V X7R	
C9106	065G080510432K F	CAP CHIP 0805 0.1UF K 50V X7R	
C9127	065G080510432K Y	CAP CHIP 0805 100N 50V X7R +/-10%	
C9134	065G080510432K Y	CAP CHIP 0805 100N 50V X7R +/-10%	
C9112	065G080510432K Y	CAP CHIP 0805 100N 50V X7R +/-10%	
C9132	065G080510432K Y	CAP CHIP 0805 100N 50V X7R +/-10%	
C9117	065G080510432K Y	CAP CHIP 0805 100N 50V X7R +/-10%	
C9115	065G080510432K Y	CAP CHIP 0805 100N 50V X7R +/-10%	
C9105	065G080510432K Y	CAP CHIP 0805 100N 50V X7R +/-10%	
C9133	065G080510432K Y	CAP CHIP 0805 100N 50V X7R +/-10%	
C8104	065G080510432K Y	CAP CHIP 0805 100N 50V X7R +/-10%	
C8105	065G080510432K Y	CAP CHIP 0805 100N 50V X7R +/-10%	
C8109	065G080510432K Y	CAP CHIP 0805 100N 50V X7R +/-10%	
C8103	065G080510532K M	CAP 0805 1UF 10% 50V X7R	
C9147	065G080510532K M	CAP 0805 1UF 10% 50V X7R	
C9114	065G080510532K M	CAP 0805 1UF 10% 50V X7R	
C9123	065G080515332K Y	CAP CHIP 0805 15N 50V X7R +/-10%	
C9121	065G080522232K Y	CAP CHIP 0805 2N2 50V X7R +/-10%	
C9110	065G080522232K Y	CAP CHIP 0805 2N2 50V X7R +/-10%	
C9109	065G080522332K Y	CAP CHIP 0805 22N 50V X7R +/-10%	
C9128	065G080522432K Y	CAP CHIP 0805 220N 50V X7R +/-10%	
C9122	065G080522522K M	CAP 0805 2.2UF 10% 25V X7R	
C9108	065G080547131J Y	CAP CHIP 0805 470P 50V NPO +/-5%	
C9125	065G1206102B2K Y	CAP 1206 1NF 10% 630V X7R -	
C9148	065G1206102B2K Y	CAP 1206 1NF 10% 630V X7R -	
D8108	093G 64 33	SWITCHING BAV99 0.2A 85V SOT-23	
D8103	093G 64 33	SWITCHING BAV99 0.2A 85V SOT-23	
D8104	093G 64 33	SWITCHING BAV99 0.2A 85V SOT-23	

D8105	093G 64 33	SWITCHING BAV99 0.2A 85V SOT-23	
D8106	093G 64 33	SWITCHING BAV99 0.2A 85V SOT-23	
D8107	093G 64 33	SWITCHING BAV99 0.2A 85V SOT-23	
ZD9103	093G 39S952 T	ZENER BZT52-B6V2 -R1-10001 6.2V 0.41W SO	
ZD9104	093G 39S953 T	ZENER BZT52-B9V1 9.1V 0.41W SOD-123	
D9109	093G 60S 15 T	SCHOTTKY RB160M 60 TR 1A 60V SOD-123	
D9105	093G 60S 15 T	SCHOTTKY RB160M 60 TR 1A 60V SOD-123	
D8102	093G 60S 15 T	SCHOTTKY RB160M 60 TR 1A 60V SOD-123	
D9108	093G 60S 15 T	SCHOTTKY RB160M 60 TR 1A 60V SOD-123	
D9102	093G 60S934 T	DIODE SS0520 SOD-123	
D9110	093G 60S934 T	DIODE SS0520 SOD-123	
D9106	093G 60S935 T	DIODE SK34A SMA	
R8126	361G12061699FT	RST CHIPR 1206 16R9 1% 1/4W	
R8139	361G12061699FT	RST CHIPR 1206 16R9 1% 1/4W	
R8122	361G12061699FT	RST CHIPR 1206 16R9 1% 1/4W	
R8125	361G12061699FT	RST CHIPR 1206 16R9 1% 1/4W	
R8121	361G12061699FT	RST CHIPR 1206 16R9 1% 1/4W	
R8138	361G12061699FT	RST CHIPR 1206 16R9 1% 1/4W	
R8132	361G12061699FT	RST CHIPR 1206 16R9 1% 1/4W	
R8128	361G12061699FT	RST CHIPR 1206 16R9 1% 1/4W	
R8124	361G12061699FT	RST CHIPR 1206 16R9 1% 1/4W	
R8137	361G12061699FT	RST CHIPR 1206 16R9 1% 1/4W	
R8127	361G12061699FT	RST CHIPR 1206 16R9 1% 1/4W	
R8123	361G12061699FT	RST CHIPR 1206 16R9 1% 1/4W	
R8136	361G12061699FT	RST CHIPR 1206 16R9 1% 1/4W	
C9146	365G1206681B1J000M	CONSIGN CAP 1206 680PF 5% 630V NP0	
D8101	393G0060A11	HF SCHOTTKY MBRD10150D 10A 150V TO-252	
D8101	393G0060A14	SCHOTTKY SM10150D1-C 10A 150V (D-PACK)	
ZD9107	393G039SA1300T	ZENER BZT52-B39_R1_00001 39V 0.41W	
ZD9105	393G039SA1400T	ZENER BZT52-B16_R1_00001 16V 0.41W	
BD901	006G 31 4	1.7MM RIVET	
T9101	006G 31 4	1.7MM RIVET	
CN901	006G 31500	EYELET	
L9901	006G 31502	EYELET	
C9145	006G 31502	EYELET	
RV9901	006G 31502	EYELET	
C9907	006G 31502	EYELET	
NR9901	006G 31502	EYELET	
L9902	006G 31502	EYELET	
C9144	006G 31502	EYELET	
C9901	006G 31502	EYELET	
IC9103	056G 158 12	SHUNT REGULATOR KIA431A-AT/P TO-92	
Q8113	057G 417513 T	TRA 2N3904 TO-92	
Q8104	057G 417513 T	TRA 2N3904 TO-92	
Q8108	057G 417513 T	TRA 2N3904 TO-92	
Q8110	057G 417513 T	TRA 2N3904 TO-92	
Q8105	057G 417513 T	TRA 2N3904 TO-92	

Q8112	057G 417513 T	TRA 2N3904 TO-92	
Q8109	057G 417513 T	TRA 2N3904 TO-92	
Q8102	057G 417513 T	TRA 2N3904 TO-92	
Q8107	057G 417513 T	TRA 2N3904 TO-92	
Q8115	057G 417513 T	TRA 2N3904 TO-92	
Q8111	057G 417513 T	TRA 2N3904 TO-92	
Q8106	057G 417513 T	TRA 2N3904 TO-92	
Q8114	057G 417513 T	TRA 2N3904 TO-92	
Q8103	057G 417513 T	TRA 2N3904 TO-92	
R8118	061G 60210552T TZ	RST CFR 1M 1/6W 5%	
R9111	061G152M24852T SY	RST MOFR 0.24OHM +-5% 2WS SY	
R9104	061G152M82352T SY	RST MOFR 82KOHM +-5% 2WS FUTABA	
R9159	061G208M10052T SY	RST MOF 10R 5% 1W	
R9903	061G212Y39452T SY	RST MGF 390K 5% 1/2W RMU12J3903A520NL	
R9901	061G212Y39452T SY	RST MGF 390K 5% 1/2W RMU12J3903A520NL	
C8106	065G 1K10223T	CAP CER 1NF 10% 1KV Y5P	
C9104	065G 1K22293S	CAP CER 2.2NF 10% 1KV R TAPING	
C8116	065G 1K470 2T6921	CAP CER 47PF K 1KV	
C8115	065G 1K470 2T6921	CAP CER 47PF K 1KV	
C9119	065G 1K470 2T6921	CAP CER 47PF K 1KV	
C9906	065G 1K470 2T6921	CAP CER 47PF K 1KV	
C9905	065G306K1012SR	CAP Y1 100PF 10% 250V Y5P	
C9903	065G306K1012SR	CAP Y1 100PF 10% 250V Y5P	
C9316	065G306K2212SR	CAP Y1 220PF 10% 250V Y5P	
C9908	065G306K4712SR	CAP Y1 470PF 10% 250V Y5P	
C9904	065G306M1023SR	CAP Y1 1NF 20% 250V Y5U	
C9315	065G306M1023SR	CAP Y1 1NF 20% 250V Y5U	
C9902	065G306M1023SR	CAP Y1 1NF 20% 250V Y5U	
C9107	067G 3154707KT	EC 47UF 20% 50V ER1H470MPN1007RU	
C8102	067G 5151018KT	EC 100UF 20% 63V EV1J101MPN1012RSU	
C8113	067G 5151018KT	EC 100UF 20% 63V EV1J101MPN1012RSU	
C9120	067G 5153316KT	EC 330UF 20% 35V 10*12 5000 HR	
C8101	067G 5153316KT	EC 330UF 20% 35V 10*12 5000 HR	
C9113	067G 5154713KT	EC 470 20% 16V EV	
C9111	067G204S3313KT	CAP CS 330UF 20% 16V 10*7 2000 HR	
C9116	067G215P2714KT	EC 270UF 20% 25V 10*9	
C9131	067G515S4716KT	EC 470UF 20% 35V 12.5*12 EC EC1V471MPN	
FB9101	071G 55 29	FERRITE BEAD	
FB9103	071G 55 29	FERRITE BEAD	
FB9106	071G 55 29	FERRITE BEAD	
ZD9106	093G 3918652T	TVS P6KE27A 27V 100A 600W DO15	
ZD9101	093G 3995552T	DIODE GDZJ27B DO-35	
ZD9106	093G 39A8652T	TVS P6KE27A A0 27V 100A 5W DO15	
ZD9101	093G 39G 6	DIODE MTZJ27B DO-34	
D9103	093G110050152T	DIODE PR1007 1A/1000V 500NS DO-41	
D9101	093G110050152T	DIODE PR1007 1A/1000V 500NS DO-41	
J9115	095G 90 23	JUMP WIRE - -	

J9104	095G 90 23	JUMP WIRE - -	
J8101	095G 90 23	JUMP WIRE - -	
J9107	095G 90 23	JUMP WIRE - -	
J9113	095G 90 23	JUMP WIRE - -	
J8111	095G 90 23	JUMP WIRE - -	
J8106	095G 90 23	JUMP WIRE - -	
J9103	095G 90 23	JUMP WIRE - -	
J9117	095G 90 23	JUMP WIRE - -	
J9101	095G 90 23	JUMP WIRE - -	
J9116	095G 90 23	JUMP WIRE - -	
J8107	095G 90 23	JUMP WIRE - -	
J9109	095G 90 23	JUMP WIRE - -	
J8104	095G 90 23	JUMP WIRE - -	
J9105	095G 90 23	JUMP WIRE - -	
J9112	095G 90 23	JUMP WIRE - -	
J8105	095G 90 23	JUMP WIRE - -	
J9114	095G 90 23	JUMP WIRE - -	
J9110	095G 90 23	JUMP WIRE - -	
J8102	095G 90 23	JUMP WIRE - -	
J8110	095G 90 23	JUMP WIRE - -	
J9108	095G 90 23	JUMP WIRE - -	
J9111	095G 90 23	JUMP WIRE - -	
J9106	095G 90 23	JUMP WIRE - -	
J9102	095G 90 23	JUMP WIRE - -	
J8103	095G 90 23	JUMP WIRE - -	
J8109	095G 90 23	JUMP WIRE - -	
J8108	095G 90 23	JUMP WIRE - -	
SG901	362G0010501MIT	SPARK GAP 500V -20/+30%	
SG902	362G0010501MIT	SPARK GAP 500V -20/+30%	
C9126	363G213K2224TA	CAP DMPE 2.2NF 10% 630V RSBPC1220SH00K	
C9142	367G415X3317KT	EC 330UF 20% 50V 12.5*12	
C9143	367G415X3317KT	EC 330UF 20% 50V 12.5*12	
C9140	367G415X3317KT	EC 330UF 20% 50V 12.5*12	
C9141	367G415X3317KT	EC 330UF 20% 50V 12.5*12	
E715	715G5508P01001002M	POWER BOARD PCB	
HS9103	Q85T0205101	SHIELD 13*30	
M01101	Q11G701017000L00XL	PCB-SUPPORT	
M01101	Q11G701017000L00ZL	PCB-SUPPORT PA66 YES 94V-V0	
	Q12G715000400100TS	RUBBER PAD	
	Q45G 77 5	PE PACKING	
	Q45G8801 TV005	PE PACKINGX358X250X0.04	
M04501	Q45G99010TV03900HW	PROTECT BAG	
M04501	Q45G99010TV03900WN	PROTECT BAG	
	Q50G 4 10	TIE (Y1900221)	
	Q50G 500 TV005	CABLE TIE	
	Q52G 1185 92	HCL TAPE	
	Q52G1501150523 W	INSULATING PLATE	

	Q52G18010TV056	TAPE_INSULATING	
	X33E0042AKZ01C0100	LENS	
	X34E0085ADTZ1L0100	DECO_BEZEL	
	X37T804001100000G1	STAND-BASE ASS'Y	
	X40G0002813A48	CEL LABEL --1.9	
M04001	X40G2012032X6700XY	IO LABEL	
M04001	X40G2012032X6700ZA	IO LABEL	
	X40G2012042X2500ZA	LABEL SIDE	
	X41G78SV81371A	QSG 3330	
	X44GJA741010CY	CUSHION-TL	
	X44GJA742010CY	CUSHION-TR	
	X44GJA743010CY	CUSHION-BL	
	X44GJA744010CY	CUSHION-BR	
	X44GJA7481301A	ARTWORK CARTON	
E089	089G214A15N HL	AC POWER CORD 1500MM	2nd-source
E089	089G214A15N JR	AC POWER CORD 1500 FOR CHINA	
	092GB1JX1A3DGC	BATTERY 1.5V BATTERY FOR LR03	
E098	098GR7BD4NCPHJ	REMOTE PHILIPS RC-B6070-420	
E098	098GR7BD4NCPHT	REMOTE CONTROL PHILIPS YKF230-029	
	X41G32MV81333A	MANUAL 3330	
	X41G78DV81311A	WARRANTY CARD FOR TPV ADDRESS	
	040G 58162435A	MANUAL P/N LABEL	
	X40G000181310C	CARTON LABEL	
	X40G000181311A	CARTON LABEL	
	X40G000262405A	SN LABEL --	
	X40G032081351A	RATING LABEL --32PFL3330/T3	
E37801	378G0110567YAH	16 OHM 11W 132X34 0 NO	
ECNA1	395G801404LY34	HARNESS 4P-B&R+B&W 700/500	
ECN21	395G801840LY17	LVDS CABLE 30P-40P 400	
ECN1	095G801313RY04	HARNESS 13P-13P 350MM	
ECN8	395G801410DY13	HARNESS 10P-5P+4P 500/500	2nd-source
ECNA1	395G801404MY34	HARNESS 4P-B&R+B&W 700/500	2nd-source
ECN21	395G801840RY17	LVDS CABLE 30P-40P 400	
ECN1	095G801313WY04	HARNESS 13P-13P 350MM	2nd-source

37PFL3330/T3 E37C91NDCTPHNNX

点位	组件	对象描述	备注
ECN1	095G801313DS05	HARNESS 13P-13P 400	
	0M1G1030 6 47 CR3	SCREW	
	0M1G1730 6120	SCREW 3X6	
	0M1G1740 8120	SCREW FOR STD/MF 42-D020715/42-D000649()	
	317GAAMB094CVT	MAIN BOARD T.VSTV59S.72A	
SP01	378G0110567YBC	6 OHM 11W L132*W34*34.5H NA NO	
ECNA1	395G801404DY61	HARNESS 4P-B&R+B&W 550/450MM	
ECN8	395G801410LY52	HARNESS 10P-5P+4P 550/550MM	
ECN21	395G801840XY26	LVDS CABLE 30P-40P 400	
	708GLA080WPX01	EBONY40(594 CH)	
	Q45G 77 5	PE PACKING	
	Q50G 4 10	TIE (Y1900221)	
	Q52G1301 9	BIG TAPE FOR PHILIPS	
	IRPFCXA3	IR BOARD	
	709T54710XM001	COMSUPTIVE ASS'Y	
	055G 23520	IPA	
CN201	033G8032 5F J	WAFER 1.25MM 5P R/A - 11.2MM	
CN201	033G8032 5F X	WAFER 1.25MM 5P R/A S1315-05RVB-S01-K	
R201	061G0603153 JF	RST 0603 15K 5% 1/10W	
R201	061G0603153 JY	RST CHIPR 15KOHM 1/10W YAGEO	
R202	061G0603221 JF	ST CHIPR 220 OHM +-5% 1/10W FENGHUA	
R203	061G0603221 JF	ST CHIPR 220 OHM +-5% 1/10W FENGHUA	
R203	061G0603221 JY	RST 0603 220R 5% 1/10W	
R202	061G0603221 JY	RST 0603 220R 5% 1/10W	
C201	065G060310432K F	CAP CHIP 0603 0.1UF K 50V X7R	
C201	065G060310432K Y	CAP 0603 100NF 10% 50V X7R	
LED201	081G 14 24 EL	CHIP LED BLUE/DARK RED	
LED201	081G 14 24 GP	CHIP LED (BR) GPTD1210BRC-D	
U201	356G0927074	HF IR RECEIVER IRM-H636M3/TR2 36 KHZ	
E715	715G5471R02000004S	IR BOARD PCB	
E715	715G5471R02000004X	IR BOARD PCB	2nd-source
	709T54710XS001	COMSUPTIVE ASS'Y	
	KEPFCXA2	KEY BOARD	
CN01	033G8032 4F X	WAFER 1.25MM 4P R/A S1315-04RVB-S01-K	
R04	061G08051001FT	RST CHIP 1K 1/8W 1%	
R03	061G08051801FY	RST CHIP R 1K8 +/-1% 1/8W	
R02	061G08052701FY	RST CHIP 2K7 1/8W 1%	
R05	061G08057500FF	RST CHIPR 750 OHM +-1% 1/8W FENGHUA	
R06	061G08057500FF	RST CHIPR 750 OHM +-1% 1/8W FENGHUA	
R07	061G08057500FF	RST CHIPR 750 OHM +-1% 1/8W FENGHUA	
R01	061G08057501FY	RST CHIP R 7K5 1/8W +/-1%	
SW05	077G 607 2 FD	CHIP TACT SW BY FORWARD SFKQGMA2125T-PL	
SW04	077G 607 2 FD	CHIP TACT SW BY FORWARD SFKQGMA2125T-PL	
SW06	077G 607 2 FD	CHIP TACT SW BY FORWARD SFKQGMA2125T-PL	
SW07	077G 607 2 FD	CHIP TACT SW BY FORWARD SFKQGMA2125T-PL	

SW01	077G 607 2 FD	CHIP TACT SW BY FORWARD SFKQGMA2125T-PL	
SW02	077G 607 2 FD	CHIP TACT SW BY FORWARD SFKQGMA2125T-PL	
SW03	077G 607 2 FD	CHIP TACT SW BY FORWARD SFKQGMA2125T-PL	
SW07	077G 607 2 HC	TACT SW 4P 1.5MM 160G TS-4402-1.58B-01	
SW06	077G 607 2 HC	TACT SW 4P 1.5MM 160G TS-4402-1.58B-01	
SW05	077G 607 2 HC	TACT SW 4P 1.5MM 160G TS-4402-1.58B-01	
SW04	077G 607 2 HC	TACT SW 4P 1.5MM 160G TS-4402-1.58B-01	
SW03	077G 607 2 HC	TACT SW 4P 1.5MM 160G TS-4402-1.58B-01	
SW02	077G 607 2 HC	TACT SW 4P 1.5MM 160G TS-4402-1.58B-01	
SW01	077G 607 2 HC	TACT SW 4P 1.5MM 160G TS-4402-1.58B-01	
CN01	311GW125D04ADJ	WAFER 1.25MM 4P R/A 1.25T-11-4PWB	
	709T52980XS001	COMSUPTIVE ASS'Y	
E715	715G5298K01000004S	KEY BOARD PCB	
E750	LCB365WX220A00910X	PANEL TPT365H1-WX2200 4890 XM TPV	
	P12G6311010	RUBBER PAD SILICONE	
	P33E0444ADT01L0100	COVER_KEY	
	P33E0445ADTY1L0100	COVER_KEY	
	P34E13460GM03K0100	REAR_COVER	
	P34E14260GM01K0100	COVER_HINGE	
	P34E1427ADTZ1L0100	DECO_BEZEL	
	PLTVCN321XXCH	POWER BOARD	
	Z40G0002ALL01A	SFIS LABEL 35MM*9MM	
IC9102	056G 139 9	IC EL817M(X) PHOTOCOUPLER DIP-4	
C9902	063G107K224 EM	CAP X2 220NF 10% 305V BULK (B)	
C9901	063G107K224 EM	CAP X2 220NF 10% 305V BULK (B)	
FB9905	071G 55 21 H1	BEAD 6.0*10 700R 25% BF-I60100R-706B	
FB9904	071G 55 21 H1	BEAD 6.0*10 700R 25% BF-I60100R-706B	
FB9907	071G 55906	FERRITE CORE 510R C8B R6H 6X9.2(A)	
FB9902	071G 55906	FERRITE CORE 510R C8B R6H 6X9.2(A)	
FB9906	071G 55906	FERRITE CORE 510R C8B R6H 6X9.2(A)	
L9901	073G 174241 H	LINE FILTER 18MH MIN LCL-12019 HA	
CN9901	087G 50147D HC	AC SOKET R/A 2P 12DEGREE H=12.8	
D8101	093G 60334	SCHOTTKY SR506-44 5A 60V DO-201AD	
CN9901-1	0Q1G 340 8140	SCREW Q1-SELF TAPING SCREW :Q X8.0	
CN8101	311GW200A06ABX	WAFER 2.0MM 6P	
CN9101	311GW250B13BBX	WAFER 2.5MM 13P R/A 35MM 7MM	
IC9351	356GD563008116	DC/DC NR111D 4A 35V DIP-8	
RV9901	361G0046621KZW	VARISTOR 620V 10%	
NR9901	361G0058259MYW006A	NTCR 2.5R 20% 3.1W SCK132R56MTY504	
C9103	367G215X470PKZ002S	EC 47UF 20% 450V 12.5*36 2000 HR 420MA P	
C9102	367G215X470PKZ002S	EC 47UF 20% 450V 12.5*36 2000 HR 420MA P	
C9101	367G215X470PKZ002S	EC 47UF 20% 450V 12.5*36 2000 HR 420MA P	
L9902	373G0174303X00	LINE FILTER 18MH MIN 1.26 3LFT18106-183	
L9101	373G0253247H00	CHOKE COIL 3UH 15% DR8*8 5A	
L8101	373G0253247H00	CHOKE COIL 3UH 15% DR8*8 5A	
L9201	373G0253247H00	CHOKE COIL 3UH 15% DR8*8 5A	
L8102	373G0253258X00	BOOST CHOKE 33UH 10% 3.5A 3LCEF16-330K	

L9301	373G0253259H00	CHOKE COIL 15UH 20% 2.5A L150B HA	
T9101	380GL32P118H00	X'FMR 400UH 8% 7.5UH PQ38 BCK-13813-HA	
BD901	393G0050460A04	BRIDGE TS6K80-02 6A 800V KBJ	
	705TXC57497	Q9101 ASS'Y	
	0M1G1730 8120	SCREW 3X8	
Q9101	357G0667A11	MOSFET STF6N65K3 5.4A 650V 30W TO-220FP	
HS9101	Q90T0236 7	HEAT SINK	
	705TXC84879	F9901 ASS"Y	
F9901-1	084G 34 14	FUSE -- -- --	
F9901	084G 41 7 C	FUSE 5A 250V UDA005(PF)	
	705TXC93916	D9251 ASS'Y	
D9251	093G 60329	DIODE FMEN-220A 20A/100V TO-220	
	0M1G1730 8120	SCREW 3X8	
HS9351	Q90T0236 3	HEAT SINK	
	705TXC93917	D9107 ASS'Y	
D9107	093G 52 66	DIODE FMX-12SL 10A/200V TO-220	
	0M1G1730 8120	SCREW 3X8	
HS9151	Q90T0236 7	HEAT SINK	
IC9151	056G 158501	IC AS431AN-E1 SOT23	
IC9106	056G 158501	IC AS431AN-E1 SOT23	
Q8107	057G 417 4	PMBS3904/PHILIPS-SMT(04)	
Q8105	057G 417 18 T	PMBT3904 SOT-23	
Q8106	057G 417907 T	TRA PMBT3906 PNP -200MA/-40V SOT-23	
Q9104	057G 417912 T	SMALLTRAN 2SA1797 -3A -50V PCP	
Q8101	057G 763125	MOSFET AO4486 4.2A 100V SO-8	
R8138	061G0805000 JF	RST CHIPR 0 OHM +-5% 1/8W FENGHUA	
R8138	061G0805000 JT	RST 0805 0.05R MAX 1/8W	
R8120	061G08051002FI	RST 0805 10K 1% 1/8W	
R9251	061G08051002FT	RST CHIP 10K 1/8W 1%	
R8120	061G08051002FY	RST CHIP 10K 1/8W 1%	
R9251	061G08051002FY	RST CHIP 10K 1/8W 1%	
R9374	061G08051003FT	RST CHIP 100K 1/8W 1%	
R8134	061G08051003FT	RST CHIP 100K 1/8W 1%	
R9114	061G08051003FT	RST CHIP 100K 1/8W 1%	
R9373	061G08051003FT	RST CHIP 100K 1/8W 1%	
R9372	061G08051003FT	RST CHIP 100K 1/8W 1%	
R9114	061G08051003FY	RST CHIP 100K 1/8W 1%	
R9372	061G08051003FY	RST CHIP 100K 1/8W 1%	
R8134	061G08051003FY	RST CHIP 100K 1/8W 1%	
R9373	061G08051003FY	RST CHIP 100K 1/8W 1%	
R9374	061G08051003FY	RST CHIP 100K 1/8W 1%	
R8127	061G0805102 JF	RST CHIPR 1K OHM +-5% 1/8W FENGHUA	
R8127	061G0805102 JT	RST CHIPR 1K OHM +- 5% 1/8W TZAI YUAN	
R9376	061G0805103 JF	RST CHIPR 10K OHM +-5% 1/8W FENGHUA	
R8119	061G0805103 JF	RST CHIPR 10K OHM +-5% 1/8W FENGHUA	
R8118	061G0805103 JF	RST CHIPR 10K OHM +-5% 1/8W FENGHUA	
R8129	061G0805103 JF	RST CHIPR 10K OHM +-5% 1/8W FENGHUA	

R8122	061G0805103 JF	RST CHIPR 10K OHM +-5% 1/8W FENGHUA	
R8105	061G0805103 JF	RST CHIPR 10K OHM +-5% 1/8W FENGHUA	
R9377	061G0805103 JF	RST CHIPR 10K OHM +-5% 1/8W FENGHUA	
R8119	061G0805103 JT	RST 0805 10K 5% 1/8W	
R8129	061G0805103 JT	RST 0805 10K 5% 1/8W	
R8122	061G0805103 JT	RST 0805 10K 5% 1/8W	
R8105	061G0805103 JT	RST 0805 10K 5% 1/8W	
R8118	061G0805103 JT	RST 0805 10K 5% 1/8W	
R9377	061G0805103 JT	RST 0805 10K 5% 1/8W	
R9376	061G0805103 JT	RST 0805 10K 5% 1/8W	
R9341	061G0805104 JI	RST 0805 100K 5% 1/8W	
R9173	061G0805104 JI	RST 0805 100K 5% 1/8W	
R9322	061G0805104 JI	RST 0805 100K 5% 1/8W	
R9341	061G0805104 JT	RST CHIPR 100KOHM +- 5% 1/8W TZAI YUAN	
R9322	061G0805104 JT	RST CHIPR 100KOHM +- 5% 1/8W TZAI YUAN	
R9173	061G0805104 JT	RST CHIPR 100KOHM +- 5% 1/8W TZAI YUAN	
R9358	061G08051102FF	RST CHIRP 11K OHM 1/8W 1% FENGHUA	
R9358	061G08051102FT	RST 0805 11K 1% 1/8W SMD0805011KF	
R9146	061G08051501FF	RST CHIPR 1.5KOHM +-1% 1/8W FENGHUA	
R9146	061G08051501FT	RST CHIPR 1K5 +-1% 1/8W TZAI YAUN	
R8131	061G08051502FI	ST 0805 15K 1% 1/8W	
R8131	061G08051502FT	RST CHIP 15K 1/8W 1%	
R9162	061G08052001FF	RST CHIPR 2KOHM +-1% 1/8W FENGHUA	
R9359	061G08052001FF	RST CHIPR 2KOHM +-1% 1/8W FENGHUA	
R9162	061G08052001FT	RST CHIP 2K 1/8W 1%	
R9359	061G08052001FT	RST CHIP 2K 1/8W 1%	
R9163	061G08052002FF	RST CHIPR 20KOHM +-1% 1/8W FENGHUA	
R9163	061G08052002FT	RST CHIP 20K 1/8W 1%	
R9151	061G08052003FI	RST 0805 200K 1% 1/8W TA-I	
R9151	061G08052003FT	RST CHIP 200K 1/8W 1%	
R9160	061G08052202FI	RST 0805 22K 1% 1/8W	
R9160	061G08052202FT	RST CHIP 22K 1/8W 1%	
R8130	061G0805224 JF	RST CHIPR 220KOHM +-5% 1/8W FENGHUA	
R8130	061G0805224 JT	RST CHIPR 220K +-5% 1/8W TZAI YUAN	
R9339	061G08052402FF	RST CHIPR 24KOHM +-1% 1/8W FENGHUA	
R9339	061G08052402FT	RST CHIP 24K 1/8W 1%	
R9161	061G08052431FI	RST CHIPR 2.43 KOHM +-1% 1/8W 0805	
R9161	061G08052431FT	RST CHIP 2K43 1/8W 1%	
R9168	061G08052703FF	RST CHIPR 270K +-1% 1/8W FENGHUA	
R9168	061G08052703FT	RST CHIPR 270K +-1% 1/8W TZAI YUAN	
R9109	061G0805331 JI	RST CHIPR 330 OHM +-5% 1/8W 0805	
R8108	061G0805331 JI	RST CHIPR 330 OHM +-5% 1/8W 0805	
R8108	061G0805331 JT	RST CHIP 330R 1/8W 5% TZAI YUAN	
R9109	061G0805331 JT	RST CHIP 330R 1/8W 5% TZAI YUAN	
R9356	061G0805333 JI	RST CHIPR 33KOHM +-5% 1/8W 0805	
R8133	061G0805333 JI	RST CHIPR 33KOHM +-5% 1/8W 0805	
R9356	061G0805333 JT	RST CHIP 33K 1/8W 5% TZAI YUAN	

R8133	061G0805333 JT	RST CHIP 33K 1/8W 5% TZAI YUAN	
R9169	061G08053603FI	RST CHIP 360K OHM 1/8W 1%	
R9166	061G08053603FI	RST CHIP 360K OHM 1/8W 1%	
R9169	061G08053603FT	RST CHIPR 360K +-1% 1/8W TZAI YUAN	
R9166	061G08053603FT	RST CHIPR 360K +-1% 1/8W TZAI YUAN	
R8104	061G0805470 JI	RST CHIPR 47 OHM +-5% 1/8W 0805	
R9106	061G0805470 JI	RST CHIPR 47 OHM +-5% 1/8W 0805	
R9106	061G0805470 JT	RST CHIPR 47OHM +-5% 1/8W TZAI YUAN	
R8104	061G0805470 JT	RST CHIPR 47OHM +-5% 1/8W TZAI YUAN	
R9145	061G08054700FI	RST 0805 470R 1% 1/8W	
R9145	061G08054700FT	RST CHIP 470R 1/8W 1%	
R9252	061G08054701FT	RST CHIP 4K7 1/8W 1%	
R9252	061G08054701FY	RST CHIP 4K7 1/8W 1%	
R8116	061G08055102FI	RST 51K OHM 1% 1/8W TA-I	
R8135	061G08055102FI	RST 51K OHM 1% 1/8W TA-I	
R8135	061G08055102FT	RST CHIP 51K 1/8W 1%	
R8116	061G08055102FT	RST CHIP 51K 1/8W 1%	
R8132	061G0805513 JI	RST CHIPR 51K OHM +-5% 1/8W 0805	
R8132	061G0805513 JT	RST CHIPR 51K +-5% 1/8W TZAI YUAN	
R9113	061G0805519 JF	RST CHIP 5.1R 1/8W 5% FENGHUA	
R9113	061G0805519 JT	RST CHIP 5.1R 1/8W 5% TZAI YUAN	
R8117	061G08056201FT	RST CHIPR 6.2KOHM +-1% 1/8W TZAI YUAN	
R8117	061G08056201FY	RST CHIP 6.2K 1/8W 1% YAGEO	
JR9101	061G1206000 JF	RST CHIPR MAX0R05 1/4W FENGHUA	
JR9102	061G1206000 JF	RST CHIPR MAX0R05 1/4W FENGHUA	
JR9103	061G1206000 JF	RST CHIPR MAX0R05 1/4W FENGHUA	
JR9104	061G1206000 JF	RST CHIPR MAX0R05 1/4W FENGHUA	
JR8103	061G1206000 JF	RST CHIPR MAX0R05 1/4W FENGHUA	
JR8101	061G1206000 JF	RST CHIPR MAX0R05 1/4W FENGHUA	
R9340	061G1206000 JF	RST CHIPR MAX0R05 1/4W FENGHUA	
R9906	061G1206000 JF	RST CHIPR MAX0R05 1/4W FENGHUA	
R9905	061G1206000 JF	RST CHIPR MAX0R05 1/4W FENGHUA	
R9905	061G1206000 JT	RST CHIPR MAX0R05 1/4W TZAI YUAN	
R9906	061G1206000 JT	RST CHIPR MAX0R05 1/4W TZAI YUAN	
JR9104	061G1206000 JT	RST CHIPR MAX0R05 1/4W TZAI YUAN	
JR9103	061G1206000 JT	RST CHIPR MAX0R05 1/4W TZAI YUAN	
JR8103	061G1206000 JT	RST CHIPR MAX0R05 1/4W TZAI YUAN	
JR9102	061G1206000 JT	RST CHIPR MAX0R05 1/4W TZAI YUAN	
JR9101	061G1206000 JT	RST CHIPR MAX0R05 1/4W TZAI YUAN	
JR8101	061G1206000 JT	RST CHIPR MAX0R05 1/4W TZAI YUAN	
R9340	061G1206000 JT	RST CHIPR MAX0R05 1/4W TZAI YUAN	
R8124	061G12061008FT	RST CHIPR 1OHM +-1% 1/4W TZAI YUAN	
R8125	061G12061008FT	RST CHIPR 1OHM +-1% 1/4W TZAI YUAN	
R8126	061G12061008FT	RST CHIPR 1OHM +-1% 1/4W TZAI YUAN	
R8125	061G12061008FY	RST 1206 1R 1% 1/4W	
R8124	061G12061008FY	RST 1206 1R 1% 1/4W	
R8126	061G12061008FY	RST 1206 1R 1% 1/4W	

R8128	061G1206101 JF	RST CHIPR 100 OHM +-5% 1/4W FENGHUA	
R9321	061G1206101 JF	RST CHIPR 100 OHM +-5% 1/4W FENGHUA	
R9321	061G1206101 JI	RST 1206 100R 5% 1/4W	
R8128	061G1206101 JT	RST CHIPR 100 OHM +-5% 1/4W TZAI YUAN	
R9107	061G1206103 JF	RST CHIPR 10KOHM +-5% 1/4W FENGHUA	
R9107	061G1206103 JT	RST CHIPR 10KOHM +-5% 1/4W TZAI YUAN	
R9357	061G1206104 JF	RST CHIPR 100KOHM +-5% 1/4W FENGHUA	
R9357	061G1206104 JT	RST CHIPR 100KOHM +-5% 1/4W TZAI YUAN	
R9122	061G1206121 JI	RST CHIPR 120 OHM +-5% 1/4W 1206	
R9124	061G1206121 JI	RST CHIPR 120 OHM +-5% 1/4W 1206	
R9125	061G1206121 JI	RST CHIPR 120 OHM +-5% 1/4W 1206	
R9121	061G1206121 JI	RST CHIPR 120 OHM +-5% 1/4W 1206	
R9125	061G1206121 JT	RST CHIPR 120 OHM +-5% 1/4W 0805	
R9121	061G1206121 JT	RST CHIPR 120 OHM +-5% 1/4W 0805	
R9124	061G1206121 JT	RST CHIPR 120 OHM +-5% 1/4W 0805	
R9122	061G1206121 JT	RST CHIPR 120 OHM +-5% 1/4W 0805	
R8123	061G1206129 JI	RST CHIPR 1.2 OHM +-5% 1/4W 1206	
R8123	061G1206129 JT	RST CHIPR 1.2OHM +-5% 1/4W TZAI YUAN	
R9147	061G1206202 JF	RST CHIPR 2KOHM +-5% 1/4W FENGHUA	
R9147	061G1206202 JT	RST CHIP R 2KOHM 1/4W +/-5%	
R9371	061G1206203 JI	RST 20K OHM 5% 1/4W TA-I	
R9371	061G1206203 JT	RST CHIPR 20KOHM +-5% 1/4W TZAI YUAN	
R9258	061G1206221 JF	RST CHIPR 220 OHM +-5% 1/4W FENGHUA	
R9257	061G1206221 JF	RST CHIPR 220 OHM +-5% 1/4W FENGHUA	
R9256	061G1206221 JF	RST CHIPR 220 OHM +-5% 1/4W FENGHUA	
R9258	061G1206221 JT	RST CHIPR 220 OHM +-5% 1/4W TZAI YUAN	
R9257	061G1206221 JT	RST CHIPR 220 OHM +-5% 1/4W TZAI YUAN	
R9256	061G1206221 JT	RST CHIPR 220 OHM +-5% 1/4W TZAI YUAN	
R8110	061G1206308 JF	RST CHIPR 0.3 OHM +-5% 1/4W FENGHUA	
R8111	061G1206308 JF	RST CHIPR 0.3 OHM +-5% 1/4W FENGHUA	
R8113	061G1206308 JF	RST CHIPR 0.3 OHM +-5% 1/4W FENGHUA	
R8112	061G1206308 JF	RST CHIPR 0.3 OHM +-5% 1/4W FENGHUA	
R8113	061G1206308 JT	RST 1206 0.3R 5% 1/4W	
R8110	061G1206308 JT	RST 1206 0.3R 5% 1/4W	
R8112	061G1206308 JT	RST 1206 0.3R 5% 1/4W	
R8111	061G1206308 JT	RST 1206 0.3R 5% 1/4W	
R9150	061G12063901FF	RST CHIPR 3.9KOHM +-1% 1/4W FENGHUA	
R9150	061G12063901FT	RST 1206 3.9K 1% 1/4W	
R9103	061G12064702FI	RST 1206 47K 1% 1/4W	
R9101	061G12064702FI	RST 1206 47K 1% 1/4W	
R9102	061G12064702FI	RST 1206 47K 1% 1/4W	
R9103	061G12064702FT	RST CHIPR 47 KOHM +-1% 1/4W TZAI YUAN	
R9101	061G12064702FT	RST CHIPR 47 KOHM +-1% 1/4W TZAI YUAN	
R9102	061G12064702FT	RST CHIPR 47 KOHM +-1% 1/4W TZAI YUAN	
R9108	061G1206560 JF	RST CHIPR 56 OHM +-5% 1/4W FENGHUA	
R9118	061G1206560 JF	RST CHIPR 56 OHM +-5% 1/4W FENGHUA	
R9117	061G1206560 JF	RST CHIPR 56 OHM +-5% 1/4W FENGHUA	

R9110	061G1206560 JF	RST CHIPR 56 OHM +-5% 1/4W FENGHUA	
R9116	061G1206560 JF	RST CHIPR 56 OHM +-5% 1/4W FENGHUA	
R9127	061G1206560 JF	RST CHIPR 56 OHM +-5% 1/4W FENGHUA	
R9115	061G1206560 JF	RST CHIPR 56 OHM +-5% 1/4W FENGHUA	
R9126	061G1206560 JF	RST CHIPR 56 OHM +-5% 1/4W FENGHUA	
R9110	061G1206560 JT	RST CHIPR 56 OHM +-5% 1/4W TZAI YUAN	
R9108	061G1206560 JT	RST CHIPR 56 OHM +-5% 1/4W TZAI YUAN	
R9127	061G1206560 JT	RST CHIPR 56 OHM +-5% 1/4W TZAI YUAN	
R9118	061G1206560 JT	RST CHIPR 56 OHM +-5% 1/4W TZAI YUAN	
R9116	061G1206560 JT	RST CHIPR 56 OHM +-5% 1/4W TZAI YUAN	
R9115	061G1206560 JT	RST CHIPR 56 OHM +-5% 1/4W TZAI YUAN	
R9126	061G1206560 JT	RST CHIPR 56 OHM +-5% 1/4W TZAI YUAN	
R9117	061G1206560 JT	RST CHIPR 56 OHM +-5% 1/4W TZAI YUAN	
R9112	061G1206689 JI	RST 1206 6.8R 5% 1/4W	
R9112	061G1206689 JT	RST 1206 6.8R 5% 1/4W	
C8111	065G080510131J F	CAP CHIP 0805 100PF J 50V NPO	
C8111	065G080510131J Y	CAP CHIP 0805 100P 50V NP0 +/-5%	
C9164	065G080510231J F	CAP 0805 1NF 5% 50V NPO	
C9164	065G080510231J Y	N0-SUGGEST CAP 0805 1NF 50V NP0 +/-5%	
C8114	065G080510332K F	CAP 0805 10NF K 50V X7R	
C9346	065G080510332K F	CAP 0805 10NF K 50V X7R	
C9346	065G080510332K Y	CAP CHIP 0805 10N 50V X7R +/-10%	
C8114	065G080510332K Y	CAP CHIP 0805 10N 50V X7R +/-10%	
C9371	065G080510432K F	CAP CHIP 0805 0.1UF K 50V X7R	
C9355	065G080510432K F	CAP CHIP 0805 0.1UF K 50V X7R	
C8122	065G080510432K F	CAP CHIP 0805 0.1UF K 50V X7R	
C9111	065G080510432K F	CAP CHIP 0805 0.1UF K 50V X7R	
C8107	065G080510432K F	CAP CHIP 0805 0.1UF K 50V X7R	
C8108	065G080510432K F	CAP CHIP 0805 0.1UF K 50V X7R	
C9353	065G080510432K F	CAP CHIP 0805 0.1UF K 50V X7R	
C9155	065G080510432K F	CAP CHIP 0805 0.1UF K 50V X7R	
C9351	065G080510432K F	CAP CHIP 0805 0.1UF K 50V X7R	
C8122	065G080510432K Y	CAP CHIP 0805 100N 50V X7R +/-10%	
C9111	065G080510432K Y	CAP CHIP 0805 100N 50V X7R +/-10%	
C9355	065G080510432K Y	CAP CHIP 0805 100N 50V X7R +/-10%	
C9155	065G080510432K Y	CAP CHIP 0805 100N 50V X7R +/-10%	
C8107	065G080510432K Y	CAP CHIP 0805 100N 50V X7R +/-10%	
C9371	065G080510432K Y	CAP CHIP 0805 100N 50V X7R +/-10%	
C9353	065G080510432K Y	CAP CHIP 0805 100N 50V X7R +/-10%	
C8108	065G080510432K Y	CAP CHIP 0805 100N 50V X7R +/-10%	
C9351	065G080510432K Y	CAP CHIP 0805 100N 50V X7R +/-10%	
C9358	065G080510522K M	CAP 0805 1UF 10% 25V X7R	
C9352	065G080510522K M	CAP 0805 1UF 10% 25V X7R	
C9357	065G080510522K M	CAP 0805 1UF 10% 25V X7R	
C9359	065G080510522K M	CAP 0805 1UF 10% 25V X7R	
C9359	065G080510522K T	CAP 0805 1UF 10% 25V X7R	
C9158	065G080510522K T	CAP 0805 1UF 10% 25V X7R	

C9255	065G080510522K	T	CAP 0805 1UF 10% 25V X7R	
C9358	065G080510522K	T	CAP 0805 1UF 10% 25V X7R	
C8123	065G080510522K	T	CAP 0805 1UF 10% 25V X7R	
C9352	065G080510522K	T	CAP 0805 1UF 10% 25V X7R	
C9156	065G080510522K	T	CAP 0805 1UF 10% 25V X7R	
C9357	065G080510522K	T	CAP 0805 1UF 10% 25V X7R	
C8121	065G080510522K	T	CAP 0805 1UF 10% 25V X7R	
C8123	065G080510532K	M	CAP 0805 1UF 10% 50V X7R	
C8121	065G080510532K	M	CAP 0805 1UF 10% 50V X7R	
C9156	065G080510532K	M	CAP 0805 1UF 10% 50V X7R	
C9158	065G080510532K	M	CAP 0805 1UF 10% 50V X7R	
C9255	065G080510532K	M	CAP 0805 1UF 10% 50V X7R	
C9108	065G080522131J	F	CAP CHIP 0805 220PF J 50V NPO	
C9108	065G080522131J	Y	CAP CHIP 0805 220P 50V NP0 +/-5%	
C9109	065G080522332K	F	CAP 0805 22NF K 50V X7R	
C9372	065G080522332K	F	CAP 0805 22NF K 50V X7R	
C9372	065G080522332K	Y	CAP CHIP 0805 22N 50V X7R +/-10%	
C9109	065G080522332K	Y	CAP CHIP 0805 22N 50V X7R +/-10%	
C9161	065G080522432K	F	CAP 0805 220NF 10% 50V X7R	
C9161	065G080522432K	Y	CAP CHIP 0805 220N 50V X7R +/-10%	
C8104	065G080522522K	M	CAP 0805 2.2UF 10% 25V X7R	
C8119	065G080522522K	M	CAP 0805 2.2UF 10% 25V X7R	
C8104	065G080522522K	T	CAP 0805 2.2UF 10% 25V X7R	
C8119	065G080522522K	T	CAP 0805 2.2UF 10% 25V X7R	
C9256	065G080556131J	F	CAP CHIP 0805 560PF J 50V NPO	
C9257	065G080556131J	F	CAP CHIP 0805 560PF J 50V NPO	
C9257	065G080556131J	Y	CAP CHIP 0805 560P 50V NP0 +/-5%	
C9256	065G080556131J	Y	CAP CHIP 0805 560P 50V NP0 +/-5%	
C9159	065G120610171J	A	CAP CHIP 1206 100PF J 500V NPO	
C9160	065G120610171J	A	CAP CHIP 1206 100PF J 500V NPO	
C9159	065G120610171J	Y	CAP 1206 100PF 5% 500V NP0	
C9160	065G120610171J	Y	CAP 1206 100PF 5% 500V NP0	
C8106	065G120610272K	F	CAP 1206 1NF 10% 500V X7R	
C8106	065G120610272K	Y	CAP 1206 1NF 10% 500V X7R	
C9354	065G120622272K	F	CAP 1206 2.2NF 10% 500V X7R	
C9354	065G120622272K	Y	CER 1206 2N2 500V X7R 10%	
IC9101	356G0379007217		AC/DC PF6200 S SOP-7	
IC8501	356G0700008054		LED DRIVER PF7903BS SOP8	
Q9107	357G0600040014		MOSFET AOD4185 -40 -40 TO252 DPAK	
Q8104	357G0600060001		MOSFET AOD2610 46A 60V TO252	
Q9301	357G07630620HF		HF MOSFET 2N7002K_R1_00001 0.3A 60V	
Q9371	357G07630620HF		HF MOSFET 2N7002K_R1_00001 0.3A 60V	
Q9373	357G07630620HF		HF MOSFET 2N7002K_R1_00001 0.3A 60V	
Q8103	357G07630620HF		HF MOSFET 2N7002K_R1_00001 0.3A 60V	
Q9372	357G07630620HF		HF MOSFET 2N7002K_R1_00001 0.3A 60V	
D8103	393G006432S0HF		SWITCHING 1N4148W 0.15A 75V SOD-123	
D9503	393G006432S0HF		SWITCHING 1N4148W 0.15A 75V SOD-123	

ZD9102	393G039SA2800T	ZENER BZT52-B36 36V -- --	
ZD9101	393G039SA2800T	ZENER BZT52-B36 36V -- --	
ZD9152	393G039SA2900T	ZENER BZT52-B15 15V 0.41 SOD-123	
D9351	393G060SA0400T	RECTIFIER SK84 8A 40V SMC	
FOR BD901	006G 31 4	1.7MM RIVET	
T9101	006G 31500	EYELET	
CN9902	006G 31500	EYELET	
FOR C9103	006G 31502	EYELET	
FOR C9102	006G 31502	EYELET	
FOR C9101	006G 31502	EYELET	
L9901	006G 31502	EYELET	
FOR C9901	006G 31502	EYELET	
FOR C9902	006G 31502	EYELET	
L9902	006G 31502	EYELET	
FOR RV9901	006G 31502	EYELET	
FOR NR9901	006G 31502	EYELET	
R9353	061G 60222052T TZ	RST CFR 22R 1/6W 5%	
R9111	061G152M24852T SY	RST MOFR 0.24OHM +-5% 2WS SY	
R9105	061G152M82352T SY	RST MOFR 82KOHM +-5% 2WS FUTABA	
R9354	061G208M10052T SY	RST MOF 10R 5% 1W	
R9901	061G212Y39452T SY	RST MGF 390K 5% 1/2W RMU12J3903A520NL	
R9903	061G212Y39452T SY	RST MGF 390K 5% 1/2W RMU12J3903A520NL	
C9105	065G 1K22293S	CAP CER 2.2NF 10% 1KV R TAPING	
C9104	065G 1K22293S	CAP CER 2.2NF 10% 1KV R TAPING	
C9906	065G306K47123R	CAP Y1 470PF 10% 250V Y5P	
C9905	065G306K47123R	CAP Y1 470PF 10% 250V Y5P	
C9908	065G306M10233R	CAP Y1 1NF 20% 250V Y5U	
C9107	067G 3154707KT	EC 47UF 20% 50V ER1H470MPN1007RU	
C9153	067G 5153316KT	EC 330UF 20% 35V 10*12 5000 HR	
C9154	067G 5153316KT	EC 330UF 20% 35V 10*12 5000 HR	
C9152	067G 5153316KT	EC 330UF 20% 35V 10*12 5000 HR	
C8112	067G 5153316KT	EC 330UF 20% 35V 10*12 5000 HR	
C9254	067G 5154714KT	EC 470UF 20% 25V EV1E471MPN1012RSU	
C9253	067G 5154714KT	EC 470UF 20% 25V EV1E471MPN1012RSU	
C9252	067G 5154714KT	EC 470UF 20% 25V EV1E471MPN1012RSU	
C9157	067G 5154714KT	EC 470UF 20% 25V EV1E471MPN1012RSU	
C9251	067G 5154714KT	EC 470UF 20% 25V EV1E471MPN1012RSU	
C9356	067G 5154714KT	EC 470UF 20% 25V EV1E471MPN1012RSU	
C9350	067G 5154714KT	EC 470UF 20% 25V EV1E471MPN1012RSU	

C9106	067G 5154797KB	EC 4.7UF 20% 50V 5*11	
FB9908	071G 55 23	BEAD 3.5*7.5*0.8 100R 25% GBQM4.777.571	
FB9903	071G 55 26 H	BEAD 3.5*6.0*0.8 127R 25% BF-I35060R-796	
D9103	093G 5212T52T	DIODE 1N4007-AO DO-41	
D9101	093G1080 252T	DIODE SARSO1-V1 SANKEN	
J9102	095G 90 23	JUMP WIRE - -	
J9149	095G 90 23	JUMP WIRE - -	
J8135	095G 90 23	JUMP WIRE - -	
J8131	095G 90 23	JUMP WIRE - -	
J9163	095G 90 23	JUMP WIRE - -	
J8139	095G 90 23	JUMP WIRE - -	
J8102	095G 90 23	JUMP WIRE - -	
J8133	095G 90 23	JUMP WIRE - -	
J9144	095G 90 23	JUMP WIRE - -	
J9135	095G 90 23	JUMP WIRE - -	
J9164	095G 90 23	JUMP WIRE - -	
J9130	095G 90 23	JUMP WIRE - -	
J9159	095G 90 23	JUMP WIRE - -	
J9158	095G 90 23	JUMP WIRE - -	
J9150	095G 90 23	JUMP WIRE - -	
J8111	095G 90 23	JUMP WIRE - -	
J9134	095G 90 23	JUMP WIRE - -	
J9101	095G 90 23	JUMP WIRE - -	
FB9901	095G 90 23	JUMP WIRE - -	
J9160	095G 90 23	JUMP WIRE - -	
J9162	095G 90 23	JUMP WIRE - -	
J8126	095G 90 23	JUMP WIRE - -	
J9112	095G 90 23	JUMP WIRE - -	
J9146	095G 90 23	JUMP WIRE - -	
J9103	095G 90 23	JUMP WIRE - -	
J8101	095G 90 23	JUMP WIRE - -	
J9165	095G 90 23	JUMP WIRE - -	
J9145	095G 90 23	JUMP WIRE - -	
J8109	095G 90 23	JUMP WIRE - -	
J8113	095G 90 23	JUMP WIRE - -	
J8115	095G 90 23	JUMP WIRE - -	
J9124	095G 90 23	JUMP WIRE - -	
J8110	095G 90 23	JUMP WIRE - -	
J8108	095G 90 23	JUMP WIRE - -	
J9161	095G 90 23	JUMP WIRE - -	
J9116	095G 90 23	JUMP WIRE - -	
J9153	095G 90 23	JUMP WIRE - -	
J9157	095G 90 23	JUMP WIRE - -	
R9164	361G152M10252T00SY	RST MOF 1K OHM 5% 2W RSS02J1001A520NH	
R9165	361G152M10252T00SY	RST MOF 1K OHM 5% 2W RSS02J1001A520NH	
C9119	365G001J4706ST	CAP CER 47PF 5% 1KV SL 8SL470J102N56G	
C8100	365G001J4706ST	CAP CER 47PF 5% 1KV SL 8SL470J102N56G	

C8105	367G415X3317KT	EC 330UF 20% 50V 12.5*12	
C8113	367G415X3317KT	EC 330UF 20% 50V 12.5*12	
E715	715G5793P01001002M	POWER BOARD PCB	
	Q11G701016000L00ZL	PCB-SUPPORT	
	Q12G6900 16	HEAT PAD	
	Q45G99010TV04100WN	PROTECT BAG	
	Q50G 500 TV005	CABLE TIE	
	Q52G130118600000YY	TAPE	
	Q52G1501150523AWYY	TAPE_INSULATING	
	Q52G160119100A00YY	TAPE	
	Q52G18010TV15200ZA	INSULATING SHEET	
M05201	Q52G18010TV16100JY	INSULATING SHEET	
M05201	Q52G18010TV16100ZA	INSULATING SHEET	
	X15T867410100000Z1	BKT_STAND	
	X15T8680102000GMYF	BKT_IO	
	X15T8681101000GMZ1	BKT_IO	
	X33E0042AKZ01C0100	LENS	
	X37T803905100000ZL	STAND-BASE ASS'Y	
	X37T8039051000B1ZL	STAND ASS'Y	
	X37T8039051000B2ZL	BASE_ASS’Y	
	X40G000200131A	OTHER LABEL --惠民标签	
	X40G2013037X0100YI	LABEL	
	X40G2013039X0900YI	IO LABEL	
	X44GLA081010SY	CUSHION-T	
	X44GLA082010SY	CUSHION-B	
	X44GLA0881301A	ARTWORK CARTON 37PFL3330/T3	
E08901	089G214A15N HL	AC POWER CORD 1500MM	2nd-source
E08901	089G214A15N JR	AC POWER CORD 1500 FOR CHINA	
	092GB1JX1A3DGC	BATTERY 1.5V BATTERY FOR LR03	
E098	098GR7BD4NCPHT	REMOTE CONTROL PHILIPS YKF230-029	
	317GARFM006CHH	RF MODULE CBIP-X	
	Q45G8801 TV005	PE PACKINGX358X250X0.04	
	X41G32MV81336D	MANUAL PFL3330 DFU	
	X41G78DV81311B	WARRANTY CARD TPV ADDRESS	
	X41G78SV813A15	QSG 37PFL3330 QSG	
	040G 58162435A	MANUAL P/N LABEL	
	X40G000162416A	OTHER LABEL --CEL LABEL G1 1.9	
	X40G000181321A	CARTON LABEL -合并 SN LABEL	
	X40G037081301A	RATING LABEL 37PFL3330/T3	

39PFL3330/T3 E39C21NDCWP1NNX

点位	组件	对象描述	备注
	052G 1186	SMALL TAPE	
	052G 1211 B	CONDUCTIVE TAPE 85MM *40MM *0.09MM (单导)	
	052G 2191 A	PAPER TAPE	
ECN1	095G801313RY04	HARNESS 13P-13P 350MM	
ECN1	095G801313WY04	HARNESS 13P-13P 350MM	2nd-source
	0M1G1030 8 47 CR3	SCREW	
	0M1G1730 6120	SCREW 3X6	
	0M1G1730 8120	SCREW 3X8	
	0M1G1740 8120	SCREW FOR STD/MF 42-D020715/42-D000649()	
	0Q1G1030 10 47 CR3	SCREW	
	317GAAMB057CVT	MAIN BOARD T.VST59S.72A	
E37801	378G0110567YAH	16 OHM 11W 132X34 0 NO	
ECNA1	395G801404LY34	HARNESS 4P-B&R+B&W 700/500	
ECNA1	395G801404MY34	HARNESS 4P-B&R+B&W 700/500	2nd-source
ECN8	395G801410DY35	HARNESS 10P-5P+4P 650/700	2nd-source
ECN8	395G801410RY35	HARNESS 10P-5P+4P 650/700	
ECN21	395G801851LZ14	LVDS CABLE 51P-40P 350	
ECN21	395G801851RZ14	LVDS CABLE 51P-40P 350	2nd-source
	705TXC37T04	STAND-BASE ASS'Y	
	X37T804201300000ZL	BASE_ASS'Y	
	X37T8042013000B1ZL	HINGE ASS'Y	
	X37T8042013000B2ZL	BASE_ASS'Y	
	IRPFCXA3	IR BOARD	
	709T54710XM001	COMSUPTIVE ASS'Y	
	055G 23520	IPA	
CN201	033G8032 5F J	WAFER 1.25MM 5P R/A - 11.2MM	
CN201	033G8032 5F X	WAFER 1.25MM 5P R/A S1315-05RVB-S01-K	
R201	061G0603153 JF	RST 0603 15K 5% 1/10W	
R201	061G0603153 JY	RST CHIPR 15KOHM 1/10W YAGEO	
R202	061G0603221 JF	ST CHIPR 220 OHM +-5% 1/10W FENGHUA	
R203	061G0603221 JF	ST CHIPR 220 OHM +-5% 1/10W FENGHUA	
R203	061G0603221 JY	RST 0603 220R 5% 1/10W	
R202	061G0603221 JY	RST 0603 220R 5% 1/10W	
C201	065G060310432K F	CAP CHIP 0603 0.1UF K 50V X7R	
C201	065G060310432K Y	CAP 0603 100NF 10% 50V X7R	
LED201	081G 14 24 EL	CHIP LED BLUE/DARK RED	
LED201	081G 14 24 GP	CHIP LED (BR) GPTD1210BRC-D	
U201	356G0927074	HF IR RECEIVER IRM-H636M3/TR2 36 KHZ	
E715	715G5471R02000004S	IR BOARD PCB	
E715	715G5471R02000004X	IR BOARD PCB	2nd-source
	709T54710XS001	COMSUPTIVE ASS'Y	
	KEPFCXAE	KEY BOARD	
CN01	033G8032 4F B	CONN 1.25MM 4P R/A 9.95MM 5.7MM	
CN01	033G8032 4F X	WAFER 1.25MM 4P R/A S1315-04RVB-S01-K	
R04	061G08051001FT	RST CHIP 1K 1/8W 1%	

R03	061G08051801FY	RST CHIP R 1K8 +/-1% 1/8W	
R02	061G08052701FY	RST CHIP 2K7 1/8W 1%	
R06	061G08057500FF	RST CHIPR 750 OHM +-1% 1/8W FENGHUA	
R05	061G08057500FF	RST CHIPR 750 OHM +-1% 1/8W FENGHUA	
R07	061G08057500FF	RST CHIPR 750 OHM +-1% 1/8W FENGHUA	
R01	061G08057501FY	RST CHIP R 7K5 1/8W +/-1%	
SW03	077G 607 2 FD	CHIP TACT SW BY FORWARD SFKQGMA2125T-PL	
SW04	077G 607 2 FD	CHIP TACT SW BY FORWARD SFKQGMA2125T-PL	
SW06	077G 607 2 FD	CHIP TACT SW BY FORWARD SFKQGMA2125T-PL	
SW01	077G 607 2 FD	CHIP TACT SW BY FORWARD SFKQGMA2125T-PL	
SW07	077G 607 2 FD	CHIP TACT SW BY FORWARD SFKQGMA2125T-PL	
SW05	077G 607 2 FD	CHIP TACT SW BY FORWARD SFKQGMA2125T-PL	
SW02	077G 607 2 FD	CHIP TACT SW BY FORWARD SFKQGMA2125T-PL	
SW02	077G 607 2 HC	TACT SW 4P 1.5MM 160G TS-4402-1.58B-01	
SW05	077G 607 2 HC	TACT SW 4P 1.5MM 160G TS-4402-1.58B-01	
SW07	077G 607 2 HC	TACT SW 4P 1.5MM 160G TS-4402-1.58B-01	
SW06	077G 607 2 HC	TACT SW 4P 1.5MM 160G TS-4402-1.58B-01	
SW01	077G 607 2 HC	TACT SW 4P 1.5MM 160G TS-4402-1.58B-01	
SW04	077G 607 2 HC	TACT SW 4P 1.5MM 160G TS-4402-1.58B-01	
SW03	077G 607 2 HC	TACT SW 4P 1.5MM 160G TS-4402-1.58B-01	
	709T57110XS001	COMSUMPTIVE ASSY	
	Q05G6054 1	SHEET	
	Q09G6012 1	PIN	
E715	715G5711K01000004S	KEY BOARD PCB	
E715	715G5711K01000004X	KEY BOARD PCB	2nd-source
E750	LCM390J1L02AD1910E	PANEL TPT390J1-HJ1L02 C1F XM(BOE) TPV	
E750	LCM390J1L02AD1910X	PANEL TPT390J1-HJ1L02 C1F XM(BOE) TPV	2nd-source
	P12G6311010	RUBBER PAD SILICONE	
	P33E0408ADT01L0200	DECO_KEY	
	P34E11890GMX3K01BA	REAR_COVER	
	P34E1250ADTZ1L01BA	DECO_BEZEL	
	P34E12510GM01K0100	COVER_HINGE	
	PLTVCL801UXRH	ADAPTER BOARD NA	
	040G 45762412B	OTHER LABEL	
CN8901	033G380212B YH	WAFER 12P 2.0 DIP	
IC9401	056G 139 8	PHOTO-COUPLER PS2561DL1-1 CTR Q100~200%	
IC9302	056G 139 8	PHOTO-COUPLER PS2561DL1-1 CTR Q100~200%	
IC9102	056G 139 8	PHOTO-COUPLER PS2561DL1-1 CTR Q100~200%	
IC9102	056G 139 9	IC EL817M(X) PHOTOCOUPLER DIP-4	
IC9302	056G 139 9	IC EL817M(X) PHOTOCOUPLER DIP-4	
IC9401	056G 139 9	IC EL817M(X) PHOTOCOUPLER DIP-4	
IC9301	056G 379121	IC STR- A6069H DIP-8	
Q8203	057G 600948	MOSFET P0420ATF 4A 200V TO-220F	
RV9901	061G 46621 W	VARISTOR 620V 10% 14*6	
NR9901	061G 58309MEW	NTCR 3R 20% 3.6W SCK15037MMY502	
C9901	063G 10722410V	0.22UF 275VAC ARCO	
C9901	063G107K224 EM	CAP X2 220NF 10% 305V BULK (B)	

C9904	063G107K474 EM	CAP X2 470NF 10% 305V	
FB9910	071G 55 21 H1	BEAD 6.0*10 700R 25% BF-I60100R-706B	
FB9911	071G 55 21 H1	BEAD 6.0*10 700R 25% BF-I60100R-706B	
FB9902	071G 55 21 H1	BEAD 6.0*10 700R 25% BF-I60100R-706B	
FB9901	071G 55 21 H1	BEAD 6.0*10 700R 25% BF-I60100R-706B	
L9901	073G 174106 X	LINE FILTER 13MH MIN 3LFT201110-133M	
L9902	073G 174106 X	LINE FILTER 13MH MIN 3LFT201110-133M	
L9801	073G 174124 L	PFC CHOKE 300UH 10% PT-009584 1 33	
L9102	073G 253 91 V	CHOKE COIL 3.5UH+-10%	
L9101	073G 253 91 V	CHOKE COIL 3.5UH+-10%	
L9301	073G 253 91 V	CHOKE COIL 3.5UH+-10%	
L9103	073G 253 91 V	CHOKE COIL 3.5UH+-10%	
L8102	073G 253203 X	CHOKE COIL 5UH 15% --	
T9301	080GL52P 54 H	X'FMR 1000UH 10% 40UH EQ30 BCK-13026-HA	
CN9901	087G 50147D HC	AC SOKET R/A 2P 12DEGREE H=12.8	
D9801	093G 52918	RECTIFIER 1N5408G-04 X0 3A 1000V DO201AD	
D9107	093G 60334	SCHOTTKY SR506-44 5A 60V DO-201AD	
FOR CN9901	0Q1G 340 8140	SCREW Q1-SELF TAPING SCREW :Q X8.0	
CN9902	311GW250B13BBX	WAFER 2.5MM 13P R/A 35MM 7MM	
C9801	363G210J105GHN	CAP MPP 1UF 5% 450V 18*9.1*12.5 --	
C9810	367G315X151PKZ000S	EC 150UF 20% 450V 18*45 3000 HR 1200MA -	
L8101	373G0253249CP0	BOOST CHOKE 33UH 10% EQ25 0.5A L020692-6	
T9101	380GL32P110CP0	X'FMR 420UH 10% 20UH PQ3220 T021238-8	
T9101	380GL32P110N00	X'FMR 420UH 10% -- PQ3220 YUVA-2052-1	
	705TPC57024	Q9801 & D9802 ASSY	
Q9801	057G 667 50	TRA STP10NK60ZFP 10A/600V TO-220FP	
D9802	093G 52905	DIODE FMNS-1106S TO-220	
	0M1G1730 8120	SCREW 3X8	
HS9801	Q90G6241 1 GP	HEAT SINK	
	705TPC57025	Q9101 ASSY	
Q9101	057G 667 21	MOSFET STP10NK70ZFP 8.6A 700V TO-220FP	
	0M1G1730 8120	SCREW 3X8	
HS9101	Q90G0087 7	HEAT SINK	
	705TPC57026	Q8101 & D8103 ASSY	
D8103	093G 60258	DIODE FME-220B TO-220 SANKEN	
	0M1G1730 8120	SCREW 3X8	
Q8101	357G0600980	MOSFET AOTF454L 13A 150V 41W TO-220F	
HS8101	Q90T0237 1	HEAT SINK	
	705TPC93035	D9106 & D9305 ASSY	
HS9103	090G6064 1	HEAT SINK	
D9106	093G 60329	DIODE FMEN-220A 20A/100V TO-220	
D9305	093G 60987	SCHOTTKY FMEN-2308 30A 80V TO-22OF	
	0M1G1730 8120	SCREW 3X8	
	705TXB84014	F9901 ASS"Y	
EF9901	084G 34 10	FUSE CLIP	
EF9901	084G 34 14	FUSE -- -- --	

F9901	084G 41 3 C	FUSE 3.15A 250V UDA3.15(PF)	
	705TXC93100	BD9901 ASS'Y	
HS9901	090G6064 1	HEAT SINK	
BD9901	093G 50460 34	BRIDGE KBJ608G 6A/800V KBJ	
BD9901	093G 50460925	BRIDGE TS6B06G-01 6A 800V KBJ	
	0M1G1730 8120	SCREW 3X8	
	705TXC93101	D9104 ASS'Y	
HS9102	090G6064 1	HEAT SINK	
D9105	093G 52 57	RECTIFIER FMXA-2202S 20A 200V TO-220F	
D9104	093G 52909	RECTIFIER SFF1006G 10A 400V ITO-220AB	
D9104	093G 220 24	DIODE FMX-23S SANKEN	
	0M1G1730 8120	SCREW 3X8	
IC8201	056G 158501	IC AS431AN-E1 SOT23	
IC9801	056G 379172	IC LD7591GS SOP-8	
IC9101	056G 379175	IC LD7523GS SOP-8	
IC8101	056G 700 40	LED DRIVER LD7400GS SOP-8	
Q9402	057G 417 4	PMBS3904/PHILIPS-SMT(04)	
Q9401	057G 419912 T	TRANSISTOR 2SD1624T-TD-E PCP	
Q8302	057G 759 2A HF	TANSISTOR 2N7002H SOT-23	
Q8201	057G 760 4A	DTA144WN3/S SOT-23	
Q8202	057G 760 5A	DTC 144WN3/S SOT-23	
Q9601	057G 769900	SMALLTRAN BCR1002N3 0.2A 50V SOT23	
Q8301	057G 769900	SMALLTRAN BCR1002N3 0.2A 50V SOT23	
R8302	061G0805000 JI	RST 0805 MAX0.05R 5% 1/8W TA-I	
R9801	061G0805100 JF	RST CHIPR 10 OHM +-5% 1/8W FENGHUA	
R9602	061G08051001FI	RST CHIPR 1KOHM +-1% 1/8W TA-I	
R9601	061G08051001FI	RST CHIPR 1KOHM +-1% 1/8W TA-I	
R8303	061G08051001FI	RST CHIPR 1KOHM +-1% 1/8W TA-I	
R9124	061G08051001FT	RST CHIP 1K 1/8W 1%	
R8207	061G08051002FI	RST 0805 10K 1% 1/8W	
R8304	061G08051002FI	RST 0805 10K 1% 1/8W	
R9404	061G08051002FI	RST 0805 10K 1% 1/8W	
R9803	061G08051002FI	RST 0805 10K 1% 1/8W	
R9130	061G08051002FI	RST 0805 10K 1% 1/8W	
R9403	061G08051002FI	RST 0805 10K 1% 1/8W	
R9808	061G08051002FI	RST 0805 10K 1% 1/8W	
R9111	061G08051002FI	RST 0805 10K 1% 1/8W	
R9401	061G08051002FI	RST 0805 10K 1% 1/8W	
R8106	061G08051002FI	RST 0805 10K 1% 1/8W	
R8209	061G08051003FI	RST 0805 100K 1% 1/8W	
R8211	061G08051003FI	RST 0805 100K 1% 1/8W	
R8210	061G08051003FI	RST 0805 100K 1% 1/8W	
C9123	061G0805103 JT	RST 0805 10K 5% 1/8W	
C9112	061G0805103 JT	RST 0805 10K 5% 1/8W	
R9812	061G08051302FI	RST CHIPR 13KOHM +-1% 1/8W TA-I	
R9107	061G08052001FT	RST CHIP 2K 1/8W 1%	
R9125	061G08052202FI	RST 0805 22K 1% 1/8W	

R9127	061G08052202FI	RST 0805 22K 1% 1/8W	
R9127	061G08052202FY	RST CHIPR 22 KOHM +-1% 1/8W	
R9108	061G08052209FT	RST 0805 22R 1% 1/8W	
R9129	061G08052401FT	RST CHIP R 2K4 +/-1% 1/8W	
R9129	061G08052401FY	RST CHIP 2K4 1/8W 1%	
R9134	061G08053002FI	RST 0805 30K 1% 1/8W	
R9134	061G08053002FT	RST CHIP 30K 1/8W 1%	
R8101	061G0805303 JI	RST CHIPR 30 KOHM +-5% 1/8W	
R8305	061G0805304 JI	RST CHIPR 300K OHM +-5% 1/8W	
R8102	061G0805304 JI	RST CHIPR 300K OHM +-5% 1/8W	
R9109	061G0805330 JF	RST CHIPR 33 OHM +-5% 1/8W FENGHUA	
R8105	061G0805330 JI	RST CHIPR 33 OHM +-5% 1/8W 0805	
R9802	061G0805330 JT	RST CHIP 33R 1/8W 5% TZAI YUAN	
R9316	061G08053301FI	RST 0805 3.3K 1% 1/8W	
R9317	061G08053301FI	RST 0805 3.3K 1% 1/8W	
R9126	061G08053301FT	RST CHIP 3K3 1/8W 1%	
R9806	061G0805332 JI	RST CHIPR 3.3KOHM +-5% 1/8W 0805	
R9807	061G0805333 JI	RST CHIPR 33KOHM +-5% 1/8W 0805	
R9311	061G0805475 JT	RST CHIP 4.7M 5% 1/8W	
R8212	061G08055101FF	RST CHIPR 5.1KOHM +-1% 1/8W FENGHUA	
R9128	061G08055102FF	RST CHIPR 51KOHM +-1% 1/8W FENGHUA	
R9128	061G08055102FI	RST 51K OHM 1% 1/8W TA-I	
R9318	061G08055601FI	RST CHIPR 5.6 KOHM +-1% 1/8W 0805	
R9319	061G08056201FT	RST CHIPR 6.2KOHM +-1% 1/8W TZAI YUAN	
R9309	061G08056203FT	RST CHIP 620K 1/8W 1%	
JR901	061G1206000 JI	RST 1206 MAX0R05 5% 1/4W	
JR802	061G1206000 JI	RST 1206 MAX0R05 5% 1/4W	
JR903	061G1206000 JI	RST 1206 MAX0R05 5% 1/4W	
JR803	061G1206000 JI	RST 1206 MAX0R05 5% 1/4W	
JR902	061G1206000 JI	RST 1206 MAX0R05 5% 1/4W	
JR905	061G1206000 JT	RST CHIPR MAX0R05 1/4W TZAI YUAN	
R9103	061G1206000 JT	RST CHIPR MAX0R05 1/4W TZAI YUAN	
JR906	061G1206000 JT	RST CHIPR MAX0R05 1/4W TZAI YUAN	
R8103	061G12061002FI	RST 1206 10K 1% 1/4W	
R9305	061G12061003FT	RST 1206 100K 1% 1/4W SMD1206100KF	
R9304	061G12061003FT	RST 1206 100K 1% 1/4W SMD1206100KF	
R9302	061G12061003FT	RST 1206 100K 1% 1/4W SMD1206100KF	
R9303	061G12061003FT	RST 1206 100K 1% 1/4W SMD1206100KF	
R9132	061G1206101 JT	RST CHIPR 100 OHM +-5% 1/4W TZAI YUAN	
R9131	061G1206101 JT	RST CHIPR 100 OHM +-5% 1/4W TZAI YUAN	
R9114	061G1206101 JT	RST CHIPR 100 OHM +-5% 1/4W TZAI YUAN	
R9314	061G1206101 JT	RST CHIPR 100 OHM +-5% 1/4W TZAI YUAN	
R9118	061G1206101 JT	RST CHIPR 100 OHM +-5% 1/4W TZAI YUAN	
R9313	061G1206101 JT	RST CHIPR 100 OHM +-5% 1/4W TZAI YUAN	
R9119	061G1206101 JT	RST CHIPR 100 OHM +-5% 1/4W TZAI YUAN	
R9113	061G1206101 JT	RST CHIPR 100 OHM +-5% 1/4W TZAI YUAN	
R8301	061G1206124 JT	RST CHIP 120K 5% 1/4W	

R8208	061G12061503FF	RST CHIPR 150KOHM +-1% 1/4W FENGHUA	
R9308	061G12061504FT	RST CHIP 1M5 1/4W 1%	
R9306	061G12061504FT	RST CHIP 1M5 1/4W 1%	
R9307	061G12061504FT	RST CHIP 1M5 1/4W 1%	
R8201	061G12061509FT	RST 1206 15R 1% 1/4W TA-I	
R8213	061G12061509FT	RST 1206 15R 1% 1/4W TA-I	
R8202	061G12061509FT	RST 1206 15R 1% 1/4W TA-I	
R8203	061G12061509FT	RST 1206 15R 1% 1/4W TA-I	
R8204	061G12061509FT	RST 1206 15R 1% 1/4W TA-I	
R8205	061G12061509FT	RST 1206 15R 1% 1/4W TA-I	
R9133	061G1206184 JF	RST CHIPR 180KOHM +-5% 1/4W FENGHUA	
R9133	061G1206184 JY	RST CHIPR 180K +-5% 1/4W YAGEO	
R9813	061G1206203 JI	RST 20K OHM 5% 1/4W TA-I	
R9106	061G1206203 JI	RST 20K OHM 5% 1/4W TA-I	
R8306	061G1206304 JI	RST 1206 300K 5% 1/4W	
R8104	061G1206330 JI	RST 1206 33R 5% 1/4W	
R9402	061G12063300FT	RST 1206 330R 1% 1/4W	
R9903	061G1206394 JT	RST CHIPR 390K +-5% 1/4W TZAI YUAN	
R9904	061G1206394 JT	RST CHIPR 390K +-5% 1/4W TZAI YUAN	
R9902	061G1206394 JT	RST CHIPR 390K +-5% 1/4W TZAI YUAN	
R9905	061G1206394 JT	RST CHIPR 390K +-5% 1/4W TZAI YUAN	
R9906	061G1206394 JT	RST CHIPR 390K +-5% 1/4W TZAI YUAN	
R9901	061G1206394 JT	RST CHIPR 390K +-5% 1/4W TZAI YUAN	
R9315	061G12064700FI	RST 1206 470R 1% 1/4W TA-I	
R8109	061G12064700FI	RST 1206 470R 1% 1/4W TA-I	
R9805	061G12064700FI	RST 1206 470R 1% 1/4W TA-I	
R9110	061G12064700FI	RST 1206 470R 1% 1/4W TA-I	
R9312	061G1206479 JT	RST 1206 4.7R 5% 1/4W	
R8206	061G1206512 JI	RST 5.1K OHM 5% 1/4W TA-I	
R9116	061G1206512 JT	RST CHIPR 5.1 KOHM +-5% 1/4W TZAI YUAN	
R9115	061G1206512 JT	RST CHIPR 5.1 KOHM +-5% 1/4W TZAI YUAN	
R9117	061G1206512 JT	RST CHIPR 5.1 KOHM +-5% 1/4W TZAI YUAN	
R9810	061G12066803FF E	RST 1206 680K 1% 1/4W	
R9809	061G12066803FF E	RST 1206 680K 1% 1/4W	
R9811	061G12066803FF E	RST 1206 680K 1% 1/4W	
R8214	061G12066812FT	RST 1206 68.1KK 1% 1/4W SMD120668K1F	
C9809	065G080510131J F	CAP CHIP 0805 100PF J 50V NPO	
C9808	065G080510231J F	CAP 0805 1NF 5% 50V NPO	
C8106	065G080510232K F	CAP 0805 1000PF 10% 50V X7R	
C8301	065G080510232K F	CAP 0805 1000PF 10% 50V X7R	
C9105	065G080510232K Y	CAP CHIP 0805 1N 50V X7R +/-10%	
C9303	065G080510332K A	CAP CHIP 0805 10NF K 50V X7R	
C9106	065G080510332K F	CAP 0805 10NF K 50V X7R	
C9807	065G080510432K A	CAP CHIP 0805 0.1UF K 50V X7R	
C9117	065G080510432K F	CAP CHIP 0805 0.1UF K 50V X7R	
C9805	065G080510432K T	0.1UF K 50V X7R TAIYO YUDEN	
C9311	065G080510432K T	0.1UF K 50V X7R TAIYO YUDEN	

C9104	065G080510432K T	0.1UF K 50V X7R TAIYO YUDEN	
C8102	065G080510432K T	0.1UF K 50V X7R TAIYO YUDEN	
C9401	065G080510432K T	0.1UF K 50V X7R TAIYO YUDEN	
C9103	065G080510432K T	0.1UF K 50V X7R TAIYO YUDEN	
C9304	065G080510432K T	0.1UF K 50V X7R TAIYO YUDEN	
C8104	065G080510432K T	0.1UF K 50V X7R TAIYO YUDEN	
C9601	065G080510532K A	CAP 0805 1UF 10% 50V X7R	
C8302	065G080510532K M	CAP 0805 1UF 10% 50V X7R	
C9806	065G080522432K A	CAP 0805 220NF 10% 50V X7R	
C9312	065G080522432K T	CAP 0805 220NF 10% 50V X7R UMK212 B7224	
C9803	065G080547031J F	CAP CHIP 0805 47PF J 50V NPO	
C8105	065G080547131J A	CAP 0805 470PF 5% 50V NP0	
C9302	065G080547432K T	CAP CHIP 0805 0.47UF K 50V X7R	
C9118	065G080547432K T	CAP CHIP 0805 0.47UF K 50V X7R	
D9602	093G 64 42SEM	SWITCHING BAV70 215MA 75V SOT-23	
Q9401	357G0761A0100T	SMALLTRAN BTC4672M3 5A 50V 0.6W SOT-89	
D8101	393G060S93400T00HF	HF SS0520_R1_00001 0.5A 20V SOD-123	
D9803	393G060S93400T00HF	HF SS0520_R1_00001 0.5A 20V SOD-123	
D9102	393G060S93400T00HF	HF SS0520_R1_00001 0.5A 20V SOD-123	
CN9901	006G 31500	EYELET	
IC9303	056G 158 10 T	DC/DC AS431AZTR-E1 150MA 40V TO-92	
IC9103	056G 158 10 T	DC/DC AS431AZTR-E1 150MA 40V TO-92	
R9301	061G 30310852T SY	RST FUSE 0.1R 5% 1W	
R8107	061G152M10852T SY	RST MOF 0R1 5% 2W	
R9101	061G152M10852T SY	RST MOF 0R1 5% 2W	
R9310	061G152M12952T SY	RST MOF 1R2 5% 2W	
R9804	061G152M15852T SY	RST MOFR 0.15R 5% 2WS FUTABA	
R9112	061G152M33852T SY	RST MOF 0R33 5% 2W	
R9102	061G152M82352T SY	RST MOFR 82KOHM +-5% 2WS FUTABA	
C9114	065G 1K10293T	CAP CER 1NF 10% 1KV R	
C9301	065G 1K1029ST	CAP CER 1NF 10% 1KV R	
C9101	065G 1K22293S	CAP CER 2.2NF 10% 1KV R TAPING	
C9121	065G 1K4719ST	CAP CER 470PF 10% 1KV R	
C9108	065G 1K4719ST	CAP CER 470PF 10% 1KV R	
C9113	065G 1K4719ST	CAP CER 470PF 10% 1KV R	
C9307	065G 1K4719ST	CAP CER 470PF 10% 1KV R	
C9912	065G306K47123R	CAP Y1 470PF 10% 250V Y5P	
C9902	065G306K47123R	CAP Y1 470PF 10% 250V Y5P	
C9910	065G306K47123R	CAP Y1 470PF 10% 250V Y5P	
C9903	065G306K47123R	CAP Y1 470PF 10% 250V Y5P	
C9912	065G306K4712SR	CAP Y1 470PF 10% 250V Y5P	
C9902	065G306K4712SR	CAP Y1 470PF 10% 250V Y5P	
C9903	065G306K4712SR	CAP Y1 470PF 10% 250V Y5P	
C9910	065G306K4712SR	CAP Y1 470PF 10% 250V Y5P	
C8101	067G 3151007KB A	EC 10UF 20% 50V 6.3*7 3000 HR	
C9804	067G 3151007KB A	EC 10UF 20% 50V 6.3*7 3000 HR	
C9305	067G 3151007KB A	EC 10UF 20% 50V 6.3*7 3000 HR	

C9102	067G 3151007KB A	EC 10UF 20% 50V 6.3*7 3000 HR	
C9402	067G 3151007KB A	EC 10UF 20% 50V 6.3*7 3000 HR	
C9306	067G 4151017KT	EC 100UF 20% 50V 8*12 ED -	
C9122	067G 5153316KT	EC 330UF 20% 35V 10*12 5000 HR	
C9111	067G 5153316KT	EC 330UF 20% 35V 10*12 5000 HR	
C8107	067G 5154709KT	EC 47UF 20% 100V 10*12	
C8108	067G 5154709KT	EC 47UF 20% 100V 10*12	
C8109	067G 5154709KT	EC 47UF 20% 100V 10*12	
C9309	067G 5154714KT	EC 470UF 20% 25V EV1E471MPN1012RSU	
C9308	067G204S3313KT	CAP CS 330UF 20% 16V 10*7 2000 HR	
C9115	067G215H1024KT	EC 1000UF 20% 25V 10*20	
C9310	067G215P2714KT	EC 270UF 20% 25V 10*9	
FB9903	071G 55 9 T	BEAD 3.5*0.8*6.0MM 110R HF	
J905	071G 55 9 T	BEAD 3.5*0.8*6.0MM 110R HF	
ZD9101	093G 3954752T	ZENER MTZJ16B 16V 0.5W DO-35	
ZD9401	093G 3954752T	ZENER MTZJ16B 16V 0.5W DO-35	
ZD9602	093G 3957752T	GDZJ6.2B	
ZD9603	093G 3995652T	DIODE GDZJ30B DO-35	
ZD9301	093G 3995652T	DIODE GDZJ30B DO-35	
ZD8301	093G 3995652T	DIODE GDZJ30B DO-35	
ZD9601	093G 3996052T	DIODE GDZJ20B DO-35	
D9601	093G 6451652T	1N4148	
D9304	093G 6451652T	1N4148	
ZD9101	093G 39G 8	ZENER GDZJ16B 16 0.5 DO-35	
ZD9401	093G 39G 8	ZENER GDZJ16B 16 0.5 DO-35	
D9101	093G110050152T	DIODE PR1007 1A/1000V 500NS DO-41	
D9302	093G110050152T	DIODE PR1007 1A/1000V 500NS DO-41	
D9303	093G110050152T	DIODE PR1007 1A/1000V 500NS DO-41	
D9301	093G110050152T	DIODE PR1007 1A/1000V 500NS DO-41	
J804	095G 90 23	JUMP WIRE - -	
FB9906	095G 90 23	JUMP WIRE - -	
J928	095G 90 23	JUMP WIRE - -	
J802	095G 90 23	JUMP WIRE - -	
J805	095G 90 23	JUMP WIRE - -	
FB9907	095G 90 23	JUMP WIRE - -	
J919	095G 90 23	JUMP WIRE - -	
J924	095G 90 23	JUMP WIRE - -	
J922	095G 90 23	JUMP WIRE - -	
J911	095G 90 23	JUMP WIRE - -	
J902	095G 90 23	JUMP WIRE - -	
J918	095G 90 23	JUMP WIRE - -	
J921	095G 90 23	JUMP WIRE - -	
J926	095G 90 23	JUMP WIRE - -	
FB9908	095G 90 23	JUMP WIRE - -	
J917	095G 90 23	JUMP WIRE - -	
J907	095G 90 23	JUMP WIRE - -	
J906	095G 90 23	JUMP WIRE - -	

J801	095G 90 23	JUMP WIRE - -	
J930	095G 90 23	JUMP WIRE - -	
J925	095G 90 23	JUMP WIRE - -	
J913	095G 90 23	JUMP WIRE - -	
J920	095G 90 23	JUMP WIRE - -	
J901	095G 90 23	JUMP WIRE - -	
J912	095G 90 23	JUMP WIRE - -	
J803	095G 90 23	JUMP WIRE - -	
J909	095G 90 23	JUMP WIRE - -	
J807	095G 90 23	JUMP WIRE - -	
J910	095G 90 23	JUMP WIRE - -	
J904	095G 90 23	JUMP WIRE - -	
J903	095G 90 23	JUMP WIRE - -	
J923	095G 90 23	JUMP WIRE - -	
J929	095G 90 23	JUMP WIRE - -	
C9906	365G306K1512SR	CAP Y1 150PF 10% 250V Y5P	
C9119	367G415X3317KT	EC 330UF 20% 50V 12.5*12	
C9120	367G415X3317KT	EC 330UF 20% 50V 12.5*12	
C9107	367G415X3317KT	EC 330UF 20% 50V 12.5*12	
C9116	367G415X6814KT	EC 680UF 20% 25V 12.5*12	
C9110	367G515C102GKT	EC 1000UF 20% 35V 12.5*20 6000HRS	
C9109	367G515C102GKT	EC 1000UF 20% 35V 12.5*20 6000HRS	
E715	715G5654P01001002M	POWER BOARD PCB	2nd-source
E715	715G5654P01001002S	POWER BOARD PCB	
	Q02G7060001001	BOLT	
	Q02G706100200100XL	BOLT	
	Q45G 77 5	PE PACKING	
M04501	Q45G99010TV04100HW	PROTECT BAG	
M04501	Q45G99010TV04100WN	PROTECT BAG	
	Q50G 4 10	TIE (Y1900221)	
	Q50G 500 TV005	CABLE TIE	
	Q52G1301 9	BIG TAPE FOR PHILIPS	
	Q52G1501150523 W	INSULATING PLATE	
	Q52G18010TV08200ZA	INSULATING SHEET	
	Q52G18010TV11400ZA	INSULATING SHEET	
	X15T8415101000GMZ1	BKT_IO	
	X15T841710100000Z1	BKT_STAND	
	X15T8516101000GMZ1	BKT_IO	
	X33E0042AKZ01C0100	LENS	
	X40G000200131A	OTHER LABEL --惠民标签	
	X40G0002813A52	CEL LABEL --39PFL3330/T3	
M04002	X40G2012032X7500XY	IO LABEL	
M04002	X40G2012032X7500ZA	IO LABEL	
M04001	X40G2012042X4300XY	SIDE LABEL	
M04001	X40G2012042X4300ZA	SIDE LABEL	
	X44GTA0781301B	ARTWORK CARTON 39PFL3330/T3	
	X44GTA181010FS	CUSHION-TL	

	X44GTA182010FS	CUSHION-TR	
	X44GTA183010FS	CUSHION-BL	
	X44GTA184020FS	CUSHION-BR	
	X44GTA18501EPE	CUSHION-REAR	
	X44GTA18701EPE	CUSHION-FRONT	
E089	089G214A15N HL	AC POWER CORD 1500MM	2nd-source
E089	089G214A15N JR	AC POWER CORD 1500 FOR CHINA	
	092GB1JX1A3DGC	BATTERY 1.5V BATTERY FOR LR03	
	098GR7BD4NCPHT	REMOTE CONTROL PHILIPS YKF230-029	
	317GARFM001CHH	RF MODULE CBIP-VII	
	Q45G8801 TV005	PE PACKINGX358X250X0.04	
	X41G32MV81335B	MANUAL 3330 DFU	
	X41G78DV81311B	WARRANTY CARD TPV ADDRESS	
	X41G78SV81370B	QSG 3330 QSG-ADD RF	
	040G 58162435A	MANUAL P/N LABEL	
	X40G000181321A	CARTON LABEL -合并 SN LABEL	
	X40G039081306C	RATING LABEL FOR 39PFL3330/T3	

42PFL3330/T3 E42C41NDCTP1NNX

点位	组件	对象描述	备注
	052G 1185	MIDDLE TAPE (Y1200141)	
	052G 1186	SMALL TAPE	
	052G 1211 B	CONDUCTIVE TAPE 85MM *40MM *0.09MM	
	052G 2191 A	PAPER TAPE	
ECN1	095G801313DS05	HARNESS 13P-13P 400	
ECN1	095G801313WS05	HARNESS 13P-13P 400MM	2nd-source
	0M1G 930 10 47 CR3	SCREW	
	0M1G1030 8 47 CR3	SCREW	
	0M1G1730 8120	SCREW 3X8	
	0M1G1740 8120	SCREW FOR STD/MF 42-D020715/42-D000649()	
	0Q1G1030 10 47 CR3	SCREW	
	317GAAMB055CVT	MAIN BOARD T.VST59S.72A	
E37801	378G0110567YAH	16 OHM 11W 132X34 0 NO	
ECNA1	395G801404LY34	HARNESS 4P-B&R+B&W 700/500	
ECNA1	395G801404MY34	HARNESS 4P-B&R+B&W 700/500	2nd-source
ECN8	395G801410RY42	HARNESS 10P-5P+4P 700/750	
ECN8	395G801410XY42	HARNESS 10P-5P+4P 700/750	2nd-source
ECN21	395G801851DZ13	LVDS CABLE 51P-40P 350	
ECN21	395G801851LZ13	LVDS CABLE 51P-40P 350	
	IRPFCXA3	IR BOARD	
	709T54710XM001	COMSUPTIVE ASS'Y	
	055G 23520	IPA	
CN201	033G8032 5F HR	CONNECTOR	
R201	061G0603153 JY	RST CHIPR 15KOHM 1/10W YAGEO	
R202	061G0603221 JF	ST CHIPR 220 OHM +-5% 1/10W FENGHUA	
C201	065G060310432K F	CAP CHIP 0603 0.1UF K 50V X7R	
U201	356G0927074	HF IR RECEIVER IRM-H636M3/TR2 36 KHZ	
E715	715G5471R01000004B	IR BOARD PCB	
E715	715G5471R01000004I	IR BOARD PCB	2nd-source
LED201	081G 14 24 EL	CHIP LED BLUE/DARK RED	
R203	061G0603221 JF	ST CHIPR 220 OHM +-5% 1/10W FENGHUA	
	709T54710XS001	COMSUPTIVE ASS'Y	
	KEPFCXAE	KEY BOARD	
CN01	033G8032 4F B	CONN 1.25MM 4P R/A 9.95MM 5.7MM	
CN01	033G8032 4F X	WAFER 4P 1.25MM	
R04	061G08051001FT	RST CHIP 1K 1/8W 1%	
R03	061G08051801FY	RST CHIP R 1K8 +/-1% 1/8W	
R02	061G08052701FY	RST CHIP 2K7 1/8W 1%	
R07	061G08057500FF	RST CHIPR 750 OHM +-1% 1/8W FENGHUA	
R05	061G08057500FF	RST CHIPR 750 OHM +-1% 1/8W FENGHUA	
R06	061G08057500FF	RST CHIPR 750 OHM +-1% 1/8W FENGHUA	
R01	061G08057501FY	RST CHIP R 7K5 1/8W +/-1%	
SW04	077G 607 2 FD	CHIP TACT SW BY FORWARD SFKQGMA2125T-PL	
SW01	077G 607 2 FD	CHIP TACT SW BY FORWARD	

		SFKQGMA2125T-PL	
SW07	077G 607 2 FD	CHIP TACT SW BY FORWARD SFKQGMA2125T-PL	
SW06	077G 607 2 FD	CHIP TACT SW BY FORWARD SFKQGMA2125T-PL	
SW03	077G 607 2 FD	CHIP TACT SW BY FORWARD SFKQGMA2125T-PL	
SW02	077G 607 2 FD	CHIP TACT SW BY FORWARD SFKQGMA2125T-PL	
SW05	077G 607 2 FD	CHIP TACT SW BY FORWARD SFKQGMA2125T-PL	
SW03	077G 607 2 HC	TACT SW 4P 1.5MM 160G TS-4402-1.58B-01	
SW04	077G 607 2 HC	TACT SW 4P 1.5MM 160G TS-4402-1.58B-01	
SW01	077G 607 2 HC	TACT SW 4P 1.5MM 160G TS-4402-1.58B-01	
SW06	077G 607 2 HC	TACT SW 4P 1.5MM 160G TS-4402-1.58B-01	
SW07	077G 607 2 HC	TACT SW 4P 1.5MM 160G TS-4402-1.58B-01	
SW05	077G 607 2 HC	TACT SW 4P 1.5MM 160G TS-4402-1.58B-01	
SW02	077G 607 2 HC	TACT SW 4P 1.5MM 160G TS-4402-1.58B-01	
	709T57110XS001	COMSUMPTIVE ASSY	
	Q05G6054 1	SHEET	
	Q09G6012 1	PIN	
E715	715G5711K01000004S	KEY BOARD PCB	
E715	715G5711K01000004X	KEY BOARD PCB	2nd-source
E750	LCA420HVN01AD2910X	PANEL TPT420H2-HVN01 100A XM TPV	
	P12G6311010	RUBBER PAD SILICONE	
	P33E0408ADT01L0100	KEY	
	P34E11930GMY3K0100	REAR_COVER	
	P34E1228ADTZ1L0100	DECO_BEZEL	
	P34E12440GM01K0100	COVER_HINGE	
	PLTVCL434UARH	ADAPTER BOARD	
CN9102	033G327813D	CONNECTOR	
CN9101	033G3802 12 H X	WAFER 12P 2.0MM H W2011-12RVA-S01	
CN8101	033G380212B YH	WAFER 12P 2.0 DIP	
IC9350	056G 139 9	IC EL817M(X) PHOTOCOUPLER DIP-4	
IC9102	056G 139 9	IC EL817M(X) PHOTOCOUPLER DIP-4	
IC9351	056G 139 9	IC EL817M(X) PHOTOCOUPLER DIP-4	
IC9301	056G 379121	IC STR- A6069H DIP-8	
Q8110	057G 761502	SMALLTRAN BTD1805AD3 5A 60V TO-126ML	
Q8108	057G 761502	SMALLTRAN BTD1805AD3 5A 60V TO-126ML	
Q8105	057G 761502	SMALLTRAN BTD1805AD3 5A 60V TO-126ML	
Q8111	057G 761502	SMALLTRAN BTD1805AD3 5A 60V TO-126ML	
Q8112	057G 761502	SMALLTRAN BTD1805AD3 5A 60V TO-126ML	
Q8104	057G 761502	SMALLTRAN BTD1805AD3 5A 60V TO-126ML	
Q8107	057G 761502	SMALLTRAN BTD1805AD3 5A 60V TO-126ML	
Q8109	057G 761502	SMALLTRAN BTD1805AD3 5A 60V TO-126ML	
Q8106	057G 761502	SMALLTRAN BTD1805AD3 5A 60V TO-126ML	
RV9901	061G 46 17 W	VARISTOR 560V 10% 16*19 TVR14561KSY	

NR9902	061G 58309MEW	NTCR 3 OHM 7A ¡À20% SCK15037MMY502	
NR9901	061G 58309MEW	NTCR 3 OHM 7A ¡À20% SCK15037MMY502	
R8107	061G3SWJ50759B SY	RST WD 0.05R 5% 3W	
C9902	063G107M47410M	CAP X2 470NF 20% 275V R46KI3470HAP1M	
C9901	063G107M47410M	CAP X2 470NF 20% 275V R46KI3470HAP1M	
C9115	063G211J1835HU	CAP MPPB 18NF 5% 1KV	
FB9911	071G 55 21 H1	BEAD 6.0*10 700R 25% BF-I60100R-706B	
FB9910	071G 55 21 H1	BEAD 6.0*10 700R 25% BF-I60100R-706B	
L9902	073G 174106 L	LINE FILTER 13MH LF-1008108	
L9901	073G 174106 L	LINE FILTER 13MH LF-1008108	
L8101	073G 174264 CP	BOOST CHOKE 25UH 10% EQ25 L020398-6	
L9105	073G 253 91 H	IND CHOKE 3.5UH+-10% DADONG	
L9350	073G 253 91 H	IND CHOKE 3.5UH+-10% DADONG	
L9104	073G 253150 H	CHOKE COIL 3.0UH 10% GBQM4.776.804	
T9101	080GL52P 51 N	X'FMR 800UH 10% 210UH ER39 YUVA-1826	
T9301	080GL52P 54 H	X'FMR 1000UH 10% 40UH EQ30 BCK-13026-HA	
CN9901	087G 50147D HC	AC SOKET R/A 2P 12DEGREE H=12.8	
D9804	093G 52918	RECTIFIER 1N5408G-04 X0 3A 1000V DO201AD	
D9156	093G 60334	SCHOTTKY SR506-44 5A 60V DO-201AD	
CN9901	0Q1G 340 8140	SCREW Q1-SELF TAPING SCREW :Q X8.0	
C9810	363G210J105GHP	CAP MPP 1UF 5% 450V	
C9824	367G315X820PKZ000S	EC 82UF 20% 450V PW2W820MLT1636DF3LRV	
C9825	367G315X820PKZ000S	EC 82UF 20% 450V PW2W820MLT1636DF3LRV	
L9801	373G0174295CP0	PFC CHOKE 170UH 10% 2.5A --	
	705TPC57027	Q9801 ASSY	
Q9801	057G 667A04	MOSFET STF24NM60N 17A 600V 30W TO-220FP	
	0M1G1730 8120	SCREW 3X8	
HS12	Q90G0087 7	HEAT SINK ÆÄËÛ/OTHER	
	705TPC57028	Q9101 & Q9102 ASSY	
Q9101	057G 667930	MOSFET AOTF8N60 8A 600V TO-220FP	
Q9102	057G 667930	MOSFET AOTF8N60 8A 600V TO-220FP	
HS13	090G6064 1	HEAT SINK	
	0M1G1730 8120	SCREW 3X8	
	705TPC57029	Q8101 & D8101 ASSY	
D8101	093G 60935	DIODE MBRF20100CT ITO-220AB	
	0M1G1730 8120	SCREW 3X8	
Q8101	357G0600980	MOSFET AOTF454L 13A 150V 41W TO-220F	
HS23	Q90G6084 1	HEAT SINK	
HS24	Q90G6084 1	HEAT SINK	
	705TPC93036	BD9901 ASSY	
BD9901	093G 50460915	BRIDGE TS10P06G 10A 800V TS6P	
	0M1G1730 8120	SCREW 3X8	
HS10	Q90T0095 5	HEAT SINK	
	705TPC93037	D9802 ASSY	
D9802	093G 52905	DIODE FMNS-1106S TO-220	
	0M1G1730 8120	SCREW 3X8	

HS11	Q90G6084 1	HEAT SINK	
	705TPC93038	D9350 ASSY	
HS20	090G6064 1	HEAT SINK	
D9350	093G 60987	SCHOTTKY FMEN-2308 30A 80V TO-22OF	
	0M1G1730 8120	SCREW 3X8	
	705TPC93039	D9151 & D9152 ASSY	
	0M1G1730 8120	SCREW 3X8	
D9152	393G0060A06	SCHOTTKY STPS30SM80CFP 30A 80V TO-220FP	
D9151	393G0060A06	SCHOTTKY STPS30SM80CFP 30A 80V TO-220FP	
HS21	Q90T0095 2	HEAT SINK	
	705TPC93040	D9153 ASSY	
D9153	093G 60930	SCHOTTKY MBRF2060CT 20A 60V ITO-220AB	
	0M1G1730 8120	SCREW 3X8	
HS22	Q90G6084 1	HEAT SINK	
	705TXB84012	F9901 ASS'Y	
	084G 34 14	FUSE CLIP 5*20MM	
F9901	084G 41 7 C	FUSE 5A 250V UDA005(PF)	
IC9801	056G 379172	IC LD7591GS SOP-8	
IC9101	056G 379176	IC SSC9512S-TL SOP-18	
IC8501	056G 700 34	LED DRIVER PF7001S SOP-14	
Q9370	057G 417 4	PMBS3904/PHILIPS-SMT(04)	
Q9107	057G 417 6	PMBS3906/PHILIPS-SMT(06)	
Q9304	057G 417 6	PMBS3906/PHILIPS-SMT(06)	
Q9352	057G 760 4	DTA144WKA BY ROHM SMT	
Q9350	057G 763 62	FET 2N7002K 300MA/60V SOT-23	
R8103	061G0805000 JF	RST CHIPR 0 OHM +-5% 1/8W FENGHUA	
R8114	061G0805000 JY	RST CHIPR MAX 0R05 OHM 1/8W YAGEO	
R8104	061G0805100 JF	RST CHIPR 10 OHM +-5% 1/8W FENGHUA	
R9112	061G0805100 JT	RST CHIP 10R 1/8W 5% TZAI YUAN	
R9119	061G0805100 JT	RST CHIP 10R 1/8W 5% TZAI YUAN	
R9115	061G0805100 JT	RST CHIP 10R 1/8W 5% TZAI YUAN	
R9832	061G0805100 JT	RST CHIP 10R 1/8W 5% TZAI YUAN	
R9381	061G0805101 JT	RST CHIP 100R 1/8W 5% TZAI YUAN	
R9383	061G0805102 JF	RST CHIPR 1K OHM +-5% 1/8W FENGHUA	
R9361	061G0805102 JF	RST CHIPR 1K OHM +-5% 1/8W FENGHUA	
R9355	061G0805102 JI	RST 0805 1K 5% 1/8W	
R9385	061G0805102 JI	RST 0805 1K 5% 1/8W	
R9384	061G0805102 JI	RST 0805 1K 5% 1/8W	
R9356	061G0805102 JI	RST 0805 1K 5% 1/8W	
R9158	061G0805102 JT	RST CHIPR 1K OHM +- 5% 1/8W TZAI YUAN	
R9382	061G0805102 JT	RST CHIPR 1K OHM +- 5% 1/8W TZAI YUAN	
R9818	061G0805103 JI	RST 0805 10K 5% 1/8W	
R9117	061G0805103 JI	RST 0805 10K 5% 1/8W	
R9814	061G0805103 JI	RST 0805 10K 5% 1/8W	
R9111	061G0805103 JI	RST 0805 10K 5% 1/8W	

R8106	061G0805103 JT	RST 0805 10K 5% 1/8W	
R8112	061G0805103 JT	RST 0805 10K 5% 1/8W	
R9122	061G0805121 JT	RST CHIPR 120OHM +- 5% 1/8W TZAI YUAN	
R9109	061G08051302FF	RST CHIPR 13KOHM +-1% 1/8W FENGHUA	
R8119	061G0805154 JT	RST CHIP 150K 1/8W 5% TZAI YUAN	
R8111	061G0805183 JT	RST CHIP 18K 1/8W 5%	
R9823	061G08051912FT	RST CHIPR 19K1 +-1% 1/8W TZAI YUAN	
R9160	061G08052001FF	RST CHIPR 2KOHM +-1% 1/8W FENGHUA	
R9339	061G08052001FF	RST CHIPR 2KOHM +-1% 1/8W FENGHUA	
R9161	061G08052052FT	RST CHIP 20K5 1/8W 1%	
R9358	061G08052201FT	CHIP 2K2 1/8W 1%	
R8102	061G0805224 JT	RST CHIPR 220K +-5% 1/8W TZAI YUAN	
R8105	061G0805229 JF	RST CHIPR 2R2 +-5% 1/8W FENGHUA	
R9357	061G08052401FI	RST 0805 2.4K 1% 1/8W	
R9125	061G0805243 JF	RST CHIPR 24KOHM +-5% 1/8W FENGHUA	
R9157	061G0805302 JF	RST CHIPR 3KOHM +-5% 1/8W FENGHUA	
R9817	061G0805333 JT	RST CHIP 33K 1/8W 5% TZAI YUAN	
R9363	061G0805334 JI	RST CHIPR 330KOHM +-5% 1/8W 0805	
R9155	061G0805363 JT	RST CHIP R 36K 1/8W +/-5%	
R9110	061G0805470 JT	RST CHIPR 47OHM +-5% 1/8W TZAI YUAN	
R9116	061G0805470 JT	RST CHIPR 47OHM +-5% 1/8W TZAI YUAN	
R9824	061G08054701FT	RST CHIP 4K7 1/8W 1%	
R9811	061G08054702FT	RST CHIP 47K 1/8W 1%	
R9813	061G08054709FT	RST 0805 47R 1% 1/8W	
R9815	061G0805471 JT	RST CHIPR 470OHM +-5% 1/8W TZAI YUAN	
R9121	061G0805471 JT	RST CHIPR 470OHM +-5% 1/8W TZAI YUAN	
R9156	061G0805472 JT	RST CHIPR 4K7 +-5% 1/8W TZAI YUAN	
R8117	061G08055101FI	RST CHIPR 5.1 KOHM +-1% 1/8W 0805	
R8101	061G08055102FI	RST 51K OHM 1% 1/8W TA-I	
R8116	061G08055102FT	RST CHIP 51K 1/8W 1%	
R9159	061G08055602FT	RST CHIP R 56K 1/8W +/-1%	
R9123	061G0805561 JT	RST CHIPR 560OHM +-5% 1/8W TZAI YUAN	
R9311	061G0805564 JT	RST CHIPR 560K +-5% 1/8W TZAI YUAN	
JR902	061G1206000 JI	RST 1206 MAX0R05 5% 1/4W	
JR904	061G1206000 JI	RST 1206 MAX0R05 5% 1/4W	
JR901	061G1206000 JI	RST 1206 MAX0R05 5% 1/4W	
JR804	061G1206000 JI	RST 1206 MAX0R05 5% 1/4W	
JR903	061G1206000 JI	RST 1206 MAX0R05 5% 1/4W	
R8110	061G12061003FI	RST 1206 100K 1% 1/4W	
R9107	061G12061004FT	RST CHIP R 1 MOHM +-1% 1/4W	
R9821	061G12061004FT	RST CHIP R 1 MOHM +-1% 1/4W	
R9822	061G12061004FT	RST CHIP R 1 MOHM +-1% 1/4W	
R9820	061G12061004FT	RST CHIP R 1 MOHM +-1% 1/4W	
R9106	061G12061004FT	RST CHIP R 1 MOHM +-1% 1/4W	
R9105	061G12061004FT	RST CHIP R 1 MOHM +-1% 1/4W	
R8129	061G12061009FI	RST 1206 10R 1% 1/4W	
R8137	061G12061009FI	RST 1206 10R 1% 1/4W	

R8131	061G12061009FI	RST 1206 10R 1% 1/4W	
R8135	061G12061009FI	RST 1206 10R 1% 1/4W	
R8133	061G12061009FI	RST 1206 10R 1% 1/4W	
R8125	061G12061009FI	RST 1206 10R 1% 1/4W	
R8127	061G12061009FI	RST 1206 10R 1% 1/4W	
R8121	061G12061009FI	RST 1206 10R 1% 1/4W	
R8123	061G12061009FI	RST 1206 10R 1% 1/4W	
R8141	061G1206101 JT	RST CHIPR 100 OHM +-5% 1/4W TZAI YUAN	
R8142	061G1206101 JT	RST CHIPR 100 OHM +-5% 1/4W TZAI YUAN	
R8143	061G1206101 JT	RST CHIPR 100 OHM +-5% 1/4W TZAI YUAN	
R8144	061G1206101 JT	RST CHIPR 100 OHM +-5% 1/4W TZAI YUAN	
R9351	061G1206101 JT	RST CHIPR 100 OHM +-5% 1/4W TZAI YUAN	
R9350	061G1206101 JT	RST CHIPR 100 OHM +-5% 1/4W TZAI YUAN	
R8141	061G1206101 JY	RST CHIPR 100R +-5% 1/4W YAGEO	
R8142	061G1206101 JY	RST CHIPR 100R +-5% 1/4W YAGEO	
R8143	061G1206101 JY	RST CHIPR 100R +-5% 1/4W YAGEO	
R8144	061G1206101 JY	RST CHIPR 100R +-5% 1/4W YAGEO	
R9360	061G1206102 JF	RST CHIPR 1KOHM +-5% 1/4W FENGHUA	
R8109	061G1206103 JT	RST CHIPR 10KOHM +-5% 1/4W TZAI YUAN	
R9307	061G1206104 JT	RST CHIPR 100KOHM +-5% 1/4W TZAI YUAN	
R9310	061G1206104 JT	RST CHIPR 100KOHM +-5% 1/4W TZAI YUAN	
R9309	061G1206104 JT	RST CHIPR 100KOHM +-5% 1/4W TZAI YUAN	
R9308	061G1206104 JT	RST CHIPR 100KOHM +-5% 1/4W TZAI YUAN	
R9305	061G12061504FT	RST CHIP 1M5 1/4W 1%	
R9306	061G12061504FT	RST CHIP 1M5 1/4W 1%	
R9304	061G12061504FT	RST CHIP 1M5 1/4W 1%	
R8120	061G12061509FT	RST 1206 15R 1% 1/4W TA-I	
R8124	061G12061509FT	RST 1206 15R 1% 1/4W TA-I	
R8128	061G12061509FT	RST 1206 15R 1% 1/4W TA-I	
R8130	061G12061509FT	RST 1206 15R 1% 1/4W TA-I	
R8134	061G12061509FT	RST 1206 15R 1% 1/4W TA-I	
R8122	061G12061509FT	RST 1206 15R 1% 1/4W TA-I	
R8126	061G12061509FT	RST 1206 15R 1% 1/4W TA-I	
R8132	061G12061509FT	RST 1206 15R 1% 1/4W TA-I	
R8136	061G12061509FT	RST 1206 15R 1% 1/4W TA-I	
R9354	061G1206221 JY	RST CHIPR 220R +-5% 1/4W YAGEO	
R9331	061G1206249 JT	RST CHIPR 2.4 OHM +-5% 1/4W TZAI YUAN	
R8108	061G1206331 JY	RST CHIPR 330 OHM +-5% 1/4W YAGEO	
R8113	061G1206390 JY	RST CHIPR 39 OHM +-5% 1/4W YAGEO	
R8139	061G1206390 JY	RST CHIPR 39 OHM +-5% 1/4W YAGEO	
R8115	061G1206390 JY	RST CHIPR 39 OHM +-5% 1/4W YAGEO	
R9905	061G1206394 JT	RST CHIPR 390K +-5% 1/4W TZAI YUAN	
R9901	061G1206394 JT	RST CHIPR 390K +-5% 1/4W TZAI YUAN	
R9904	061G1206394 JT	RST CHIPR 390K +-5% 1/4W TZAI YUAN	
R9903	061G1206394 JT	RST CHIPR 390K +-5% 1/4W TZAI YUAN	
R9906	061G1206394 JT	RST CHIPR 390K +-5% 1/4W TZAI YUAN	
R9902	061G1206394 JT	RST CHIPR 390K +-5% 1/4W TZAI YUAN	

R9337	061G1206475 JT	RST CHIPR 4.7 MOHM +-5% 1/4W TZAI YUAN	
R9152	061G1206512 JI	RST 5.1K OHM 5% 1/4W TA-I	
R9153	061G1206512 JI	RST 5.1K OHM 5% 1/4W TA-I	
R9154	061G1206512 JI	RST 5.1K OHM 5% 1/4W TA-I	
R9151	061G1206512 JI	RST 5.1K OHM 5% 1/4W TA-I	
R9162	061G1206512 JT	RST CHIPR 5.1 KOHM +-5% 1/4W TZAI YUAN	
R9362	061G1206512 JT	RST CHIPR 5.1 KOHM +-5% 1/4W TZAI YUAN	
R8140	061G1206513 JT	RST CHIPR 51 KOHM +-5% 1/4W TZAI YUAN	
C8114	065G080510131J F	CAP CHIP 0805 100PF J 50V NPO	
C8110	065G080510231J M	CAP 0805 1NF 5% 50V NP0	
C8118	065G080510231J M	CAP 0805 1NF 5% 50V NP0	
C8117	065G080510231J M	CAP 0805 1NF 5% 50V NP0	
C9351	065G080510232K Y	CAP CHIP 0805 1N 50V X7R +/-10%	
C9116	065G080510232K Y	CAP CHIP 0805 1N 50V X7R +/-10%	
C9350	065G080510232K Y	CAP CHIP 0805 1N 50V X7R +/-10%	
C9309	065G080510332K F	CAP 0805 10NF K 50V X7R	
C8108	065G080510332K Y	CAP CHIP 0805 10N 50V X7R +/-10%	
C9374	065G080510432K A	CAP CHIP 0805 0.1UF K 50V X7R	
C9379	065G080510432K A	CAP CHIP 0805 0.1UF K 50V X7R	
C8105	065G080510432K A	CAP CHIP 0805 0.1UF K 50V X7R	
C9107	065G080510432K A	CAP CHIP 0805 0.1UF K 50V X7R	
C8109	065G080510432K A	CAP CHIP 0805 0.1UF K 50V X7R	
C9308	065G080510432K A	CAP CHIP 0805 0.1UF K 50V X7R	
C9159	065G080510432K A	CAP CHIP 0805 0.1UF K 50V X7R	
C9813	065G080510432K A	CAP CHIP 0805 0.1UF K 50V X7R	
C9356	065G080510432K A	CAP CHIP 0805 0.1UF K 50V X7R	
C9157	065G080510432K A	CAP CHIP 0805 0.1UF K 50V X7R	
C9109	065G080510432K A	CAP CHIP 0805 0.1UF K 50V X7R	
C9154	065G080510432K A	CAP CHIP 0805 0.1UF K 50V X7R	
C8104	065G080510432K A	CAP CHIP 0805 0.1UF K 50V X7R	
C9127	065G080510432K A	CAP CHIP 0805 0.1UF K 50V X7R	
C9378	065G080510432K F	CAP CHIP 0805 0.1UF K 50V X7R	
C9117	065G080510522K T	CAP 0805 1UF 10% 25V X7R	
C9118	065G080510522K T	CAP 0805 1UF 10% 25V X7R	
C9126	065G080522131J M	CAP 0805 220PF 5% 50V NP0	
C9815	065G080522131J M	CAP 0805 220PF 5% 50V NP0	
C8120	065G080522131J Y	CAP CHIP 0805 220P 50V NP0 +/-5%	
C8115	065G080522131J Y	CAP CHIP 0805 220P 50V NP0 +/-5%	
C9819	065G080522131J Y	CAP CHIP 0805 220P 50V NP0 +/-5%	
C8116	065G080522131J Y	CAP CHIP 0805 220P 50V NP0 +/-5%	
C8121	065G080522131J Y	CAP CHIP 0805 220P 50V NP0 +/-5%	
C9355	065G080522432K Y	CAP CHIP 0805 220N 50V X7R +/-10%	
C9120	065G080533031J Y	CAP CHIP 0805 33P 50V NP0 +/-5%	
C9817	065G080547332K Y	CAP CHIP 0805 47N 50V X7R +/-10%	
C9818	065G080547432K A	CAP CHIP 0805 0.47UF K 50V X7R	
C9114	065G080547432K A	CAP CHIP 0805 0.47UF K 50V X7R	
C9158	065G080547432K A	CAP CHIP 0805 0.47UF K 50V X7R	

C9321	065G080547432K A	CAP CHIP 0805 0.47UF K 50V X7R	
C9812	065G080556031J Y	CAP 0805 56PF 5% 50V NP0	
C8119	065G1206102B2K Y	CAP 1206 1NF 10% 630V X7R -	
D8105	093G 64 33	SWITCHING BAV99 0.2A 85V SOT-23	
D8106	093G 64 33	SWITCHING BAV99 0.2A 85V SOT-23	
D8104	093G 64 33	SWITCHING BAV99 0.2A 85V SOT-23	
D8103	093G 64 33	SWITCHING BAV99 0.2A 85V SOT-23	
D9355	093G 64 42 PP	BAV70 SOT-23	
D9303	093G 6432S	DIODE 1N4148W	
D9304	093G 6432S	DIODE 1N4148W	
D9154	093G 6432S	DIODE 1N4148W	
D9305	093G 6432S	DIODE 1N4148W	
D8102	093G 60S 15 T	SCHOTTKY RB160M 60 TR 1A 60V SOD-123	
D9103	093G 60S934 T	DIODE SS0520 SOD-123	
D9805	093G 60S934 T	DIODE SS0520 SOD-123	
D9102	093G 60S934 T	DIODE SS0520 SOD-123	
Q9321	357G0761A0100T	SMALLTRAN BTC4672M3 5A 50V 0.6W SOT-89	
CN9901	006G 31500	EYELET	
T9101	006G 31502	EYELET	
IC9352	056G 158 10 T	DC/DC AS431AZTR-E1 150MA 40V TO-92	
IC9103	056G 158 10 T	DC/DC AS431AZTR-E1 150MA 40V TO-92	
R9302	061G 60210452T TZ	RST CFR 100K 1/6W 5%	
R8118	061G 60210552T TZ	RST CFR 1M 1/6W 5%	
R9801	061G152M20852T SY	RST MOF 0.2OHM 5% 2W FUTABA	
R9802	061G152M20852T SY	RST MOF 0.2OHM 5% 2W FUTABA	
R9301	061G208M82852T SY	RST MOF 0.82R 5% 1W RSS01J0R820A520NH	
R9104	061G303A10852T SY	RST FUSE 0.1R 5% 1W	
R9348	061G303A10852T SY	RST FUSE 0.1R 5% 1W	
C9827	065G 1K10193T	CAP CER 100PF 10% 1KV R	
C8106	065G 1K1022ST	CAP CER 1NF 10% 1KV Y5P	
C9329	065G 1K10293T	CAP CER 1NF 10% 1KV R	
C9809	065G 1M10333S	CAP CER 10NF 20% 1KV Y5U	
C9811	065G 1M10333S	CAP CER 10NF 20% 1KV Y5U	
C9826	065G 1M10333S	CAP CER 10NF 20% 1KV Y5U	
C9124	065G 2K10123T	CAP CER 100PF 10% 2KV Y5P	
C9119	065G 3J10063S	CAP CER 10PF 5% 3KV SL	
C9906	065G306K22123R	CAP Y1 220PF 10% 250V Y5P	
C9905	065G306K22123R	CAP Y1 220PF 10% 250V Y5P	
C9909	065G306K2212SR	CAP Y1 220PF 10% 250V Y5P	
C9903	065G306K3312SR	CAP Y1 330PF 10% 250V Y5P	
C9904	065G306K3312SR	CAP Y1 330PF 10% 250V Y5P	
C9908	065G306K4712SR	CAP Y1 470PF 10% 250V Y5P	
C9912	065G306K4712SR	CAP Y1 470PF 10% 250V Y5P	
C8122	065G306K4712SR	CAP Y1 470PF 10% 250V Y5P	
C9128	067G 3154797KT	EC 4.7UF 50V M 5*11MM	
C8102	067G 5151018KT	EC 100UF 20% 63V EV1J101MPN1012RSU	
C8113	067G 5151018KT	EC 100UF 20% 63V EV1J101MPN1012RSU	

C8107	067G 5153316KT	EC 330UF 20% 35V 10*12 5000 HR	
C8101	067G 5153316KT	EC 330UF 20% 35V 10*12 5000 HR	
C9354	067G 5154713KT	EC 470 20% 16V EV	
C9156	067G 5154714KT	EC 470UF 20% 25V EV1E471MPN1012RSU	
C8103	067G215P4714KT	EC 470UF 20% 25V 10*16	
C9160	067G215P4716KT	EC 470UF 20% 35V 10*20	
C9153	067G215P4716KT	EC 470UF 20% 35V 10*20	
C9337	067G215Y1007KT	KY50VB10M-TP5 5*11.5 EG	
C9108	067G215Y1007KT	KY50VB10M-TP5 5*11.5 EG	
C9814	067G215Y2207KT	CAP 105℃ 22UF M 50V KINGNICHI EG	
C9333	067G215Y2207KT	CAP 105℃ 22UF M 50V KINGNICHI EG	
C9331	067G515L1017KT	EC 100UF 20% 50V 8*12	
FB9909	071G 55 9 T	BEAD 3.5*0.8*6.0MM 110R HF	
FB9914	071G 55 26 H	BEAD 3.5*6.0*0.8 127R 25% BF-I35060R-796	
FB9901	071G 55 26 H	BEAD 3.5*6.0*0.8 127R 25% BF-I35060R-796	
FB9908	071G 55 26 H	BEAD 3.5*6.0*0.8 127R 25% BF-I35060R-796	
FB9902	071G 55 26 H	BEAD 3.5*6.0*0.8 127R 25% BF-I35060R-796	
FB9913	071G 55 26 H	BEAD 3.5*6.0*0.8 127R 25% BF-I35060R-796	
FB9904	071G 55 26 H	BEAD 3.5*6.0*0.8 127R 25% BF-I35060R-796	
FB9912	071G 55 26 H	BEAD 3.5*6.0*0.8 127R 25% BF-I35060R-796	
FB9903	071G 55 26 H	BEAD 3.5*6.0*0.8 127R 25% BF-I35060R-796	
FB9907	071G 55 29 HF	FERRITE BEAD 3.5*2.2*0.8 TAPING HF	
FB8101	071G 55 29 HF	FERRITE BEAD 3.5*2.2*0.8 TAPING HF	
ZD9151	093G 3995652T	DIODE GDZJ30B DO-35	
ZD9353	093G 3995652T	DIODE GDZJ30B DO-35	
ZD9301	093G 39A0852T	GDZJ18B	
D9105	093G 52908	RECTIFIER UF4007 A0 1 1000 DO-41	
D9330	093G 6026T52T	CTIFIER DIODE FR107	
D9301	093G 6026T52T	CTIFIER DIODE FR107	
D9335	093G 6026T52T	CTIFIER DIODE FR107	
D8107	093G 6451652T	1N4148	
ZD9101	093G 39G 8	ZENER GDZJ16B 16 0.5 DO-35	
ZD9352	093G 39G 8	ZENER GDZJ16B 16 0.5 DO-35	
J921	095G 90 23	JUMP WIRE - -	
J928	095G 90 23	JUMP WIRE - -	
J814	095G 90 23	JUMP WIRE - -	
J936	095G 90 23	JUMP WIRE - -	
J934	095G 90 23	JUMP WIRE - -	
J932	095G 90 23	JUMP WIRE - -	
J933	095G 90 23	JUMP WIRE - -	
J812	095G 90 23	JUMP WIRE - -	
J804	095G 90 23	JUMP WIRE - -	
J903	095G 90 23	JUMP WIRE - -	
J915	095G 90 23	JUMP WIRE - -	
J906	095G 90 23	JUMP WIRE - -	
J808	095G 90 23	JUMP WIRE - -	
J907	095G 90 23	JUMP WIRE - -	

J922	095G 90 23	JUMP WIRE - -	
J920	095G 90 23	JUMP WIRE - -	
J806	095G 90 23	JUMP WIRE - -	
J937	095G 90 23	JUMP WIRE - -	
J926	095G 90 23	JUMP WIRE - -	
J807	095G 90 23	JUMP WIRE - -	
J801	095G 90 23	JUMP WIRE - -	
J919	095G 90 23	JUMP WIRE - -	
J902	095G 90 23	JUMP WIRE - -	
J810	095G 90 23	JUMP WIRE - -	
J939	095G 90 23	JUMP WIRE - -	
J805	095G 90 23	JUMP WIRE - -	
J927	095G 90 23	JUMP WIRE - -	
J925	095G 90 23	JUMP WIRE - -	
J924	095G 90 23	JUMP WIRE - -	
J923	095G 90 23	JUMP WIRE - -	
J904	095G 90 23	JUMP WIRE - -	
J929	095G 90 23	JUMP WIRE - -	
J918	095G 90 23	JUMP WIRE - -	
J917	095G 90 23	JUMP WIRE - -	
FB9905	095G 90 23	JUMP WIRE - -	
FB9906	095G 90 23	JUMP WIRE - -	
J935	095G 90 23	JUMP WIRE - -	
J913	095G 90 23	JUMP WIRE - -	
J931	095G 90 23	JUMP WIRE - -	
J809	095G 90 23	JUMP WIRE - -	
J802	095G 90 23	JUMP WIRE - -	
J905	095G 90 23	JUMP WIRE - -	
J930	095G 90 23	JUMP WIRE - -	
J912	095G 90 23	JUMP WIRE - -	
J811	095G 90 23	JUMP WIRE - -	
J941	095G 90 23	JUMP WIRE - -	
J938	095G 90 23	JUMP WIRE - -	
J914	095G 90 23	JUMP WIRE - -	
J813	095G 90 23	JUMP WIRE - -	
J908	095G 90 23	JUMP WIRE - -	
J940	095G 90 23	JUMP WIRE - -	
J916	095G 90 23	JUMP WIRE - -	
J901	095G 90 23	JUMP WIRE - -	
Q8103	357G0419A0100T	BTN8050BA3 1.5A 25V TO-92	
C9310	365G001J4706ST	CAP CER 47PF 5% 1KV SL 8SL470J102N56G	
C9155	367G515C102GKT	EC 1000UF 20% 35V 12.5*20 6000HRS	
C9151	367G515C102GKT	EC 1000UF 20% 35V 12.5*20 6000HRS	
C9152	367G515C102GKT	EC 1000UF 20% 35V 12.5*20 6000HRS	
C9335	367G515L1023KT	EC 1000UF 20% 16V 10*20	
C9353	367G515L1023KT	EC 1000UF 20% 16V 10*20	
E715	715G5670P0E0010020	POWER BOARD PCB	

	Q02G7060001001	BOLT	
	Q02G706100200100XL	BOLT	
	Q45G 77 5	PE PACKING	
	Q45G88010TV03700X1	PROTECT BAG	
M04501	Q45G99010TV04100HW	PROTECT BAG	
M04501	Q45G99010TV04100WN	PROTECT BAG	
	Q50G 4 10	TIE (Y1900221)	
	Q50G 500 TV005	CABLE TIE	
	Q52G 1185 92	HCL TAPE	
	Q52G1501150523 W	INSULATING PLATE	
	Q52G18010TV08900ZA	INSULATING SHEET	
	X15T842010100000BL	BKT_STAND	
	X15T8515101000GMBL	BKT_BTM	
	X15T8516101000GMZ1	BKT_IO	
	X33E0042AKZ01C0100	LENS	
	X37T804301100000FH	BASE_ASS'Y	
	X40G0002813A50	CEL LABEL --1.9	
M04002	X40G2012032X7500XY	IO LABEL	
M04002	X40G2012032X7500ZA	IO LABEL	
M04001	X40G2012042X4300XY	SIDE LABEL	
M04001	X40G2012042X4300ZA	SIDE LABEL	
	X44GNA6381301A	ARTWORK CARTON	
	X44GNA74101000	CUSHION-TL	
	X44GNA74201000	CUSHION-TR	
	X44GNA74301000	CUSHION-BL	
	X44GNA74401000	CUSHION-BR	
	X44GNA74501000	CUSHION-TM	
E089	089G214A15N HL	AC POWER CORD 1500MM	2nd-source
E089	089G214A15N JR	AC POWER CORD 1500 FOR CHINA	
	092GB1JX1A3DGC	BATTERY 1.5V BATTERY FOR LR03	
E098	098GR7BD4NCPHJ	REMOTE PHILIPS RC-B6070-420	
E098	098GR7BD4NCPHT	REMOTE CONTROL PHILIPS YKF230-029	
	Q45G8801 TV005	PE PACKINGX358X250X0.04	
	X41G32MV81332A	MANUAL 3330 SERIES	
	X41G78DV81311A	WARRANTY CARD FOR TPV ADDRESS	
	X41G78SV81370A	QSG 3330 SERIES	
	040G 58162435A	MANUAL P/N LABEL	
	X40G000181310C	CARTON LABEL	
	X40G000181311A	CARTON LABEL	
	X40G000262405A	SN LABEL --	
	X40G042081358A	RATING LABEL --42PFL3330/T3	