Service
Service
Service

3052

Service Manual

Chassis name	Platform	Model name
3052	TSUMV56	32PHA3052/56

Published by Guangxiang.zhang 3052 Quality Subject to modification
2017-July-11

2017 © TP Vision Netherlands B.V.
All rights reserved. Specifications are subject to change without notice. Trademarks are the property of Koninklijke Philips Electronics N.V. or their respective owners.
TP Vision Netherlands B.V. reserves the right to change products at any time without being obliged to adjust earlier supplies accordingly.
PHILIPS and the PHILIPS' Shield Emblem are used under license from Koninklijke Philips Electronics N.V.

1.Product inforamtion.....**3**
2.Connections overview.....**5**
3.Mechanical Instructions.....**6**
Cable dressing (32" 3052 series).....6
Assembly/Panel Removal 6
4.Service Modes.....**10**
5Software upgrading and Panel Code.....**12**
6.Circuit Descriptions.....**14**
7.IC Data Sheet.....**21**
8.Circuit Diagrams.....**25**
9.Styling Sheet.....**30**
3052 32" series.....**30**

2017 © TP Vision Netherlands B.V.
All rights reserved. Specifications are subject to change without notice. Trademarks are the property of Koninklijke Philips Electronics N.V. or their respective owners.
TP Vision Netherlands B.V. reserves the right to change products at any time without being obliged to adjust earlier supplies accordingly.
PHILIPS and the PHILIPS' Shield Emblem are used under license from Koninklijke Philips Electronics N.V.

1. Product information

Product information is subject to change without notice.

For detailed product information，please visit www.philips.com/support

Display

Type

Diagonal screen size

•32PHA3052/56: 32 inch

Display resolution

•1920*1080p

Input resolution

• 800 x 600p - 60 Hz

• 1024 x 768p - 60 Hz

• 1280 x 768p - 60 Hz

• 1360 x 765p - 60 Hz

• 1360 x 768p - 60 Hz

• 1280 x 1024p - 60 Hz

• 1920 x 1080p - 60 Hz23.5

Video formats

Resolution — Refresh rate

• 480i, 480p,576i, 576p,720p,1080i,1080p(24/25/30/50/60Hz)

Computer formats

Resolutions (amongst others)

• 720*400@70HZ

• 640*480@60HZ

• 800*600@60HZ

• 1024*768@60HZ

• 1360*768@60HZ

• 1280*720@60HZ

• 1280*960@60HZ

• 1280*1024@60HZ

• 1600*900@60HZ

• 1920*1080@60HZ

Dimensions and Weights

32PHA3052/56

• without TV stand:

Width 730 mm - Height430 mm - Depth77 mm - Weight 3.96kg kg

• with TV stand:

Width 825 mm - Height514 mm - Depth 128 mm - Weight 4.0kg

Connectivity

TV Side

• HDMI 2 in
• HDMI 1 in - MHL
• USB x 1

TV Rear

CVBS/Y Pb Pr : CVBS/Y Pb Pr, Audio L/R

Audio in: DVI

VGA x 1

Sound

Output Power (10% THD) RMS	16W
Speaker configuration	8W+8W
Speaker system	2.0
Speaker type	built-in(normal)
Auto Volume Levelier / Auto Volume Levelier +	YES
Dolby Digital DecoderType	YES

Multimedia

Connections
• USB 2.0
•

Music Playback Formats	MPEG-1,MPEG-2（Layer I/II)
	MP3，AAC-LC, HE-AAC
Picture Playback Formats	JPEG、BMP、PNG

Power

Product specifications are subject to change without notice. For more specification details of this product, see www.philips.com/support

Power
• Mains power : AC 100-240V 50/60Hz
• Standby Energy Consumption:≤0.5W
• Ambient temperature : 5°C to 40°C

2. Connections Overview

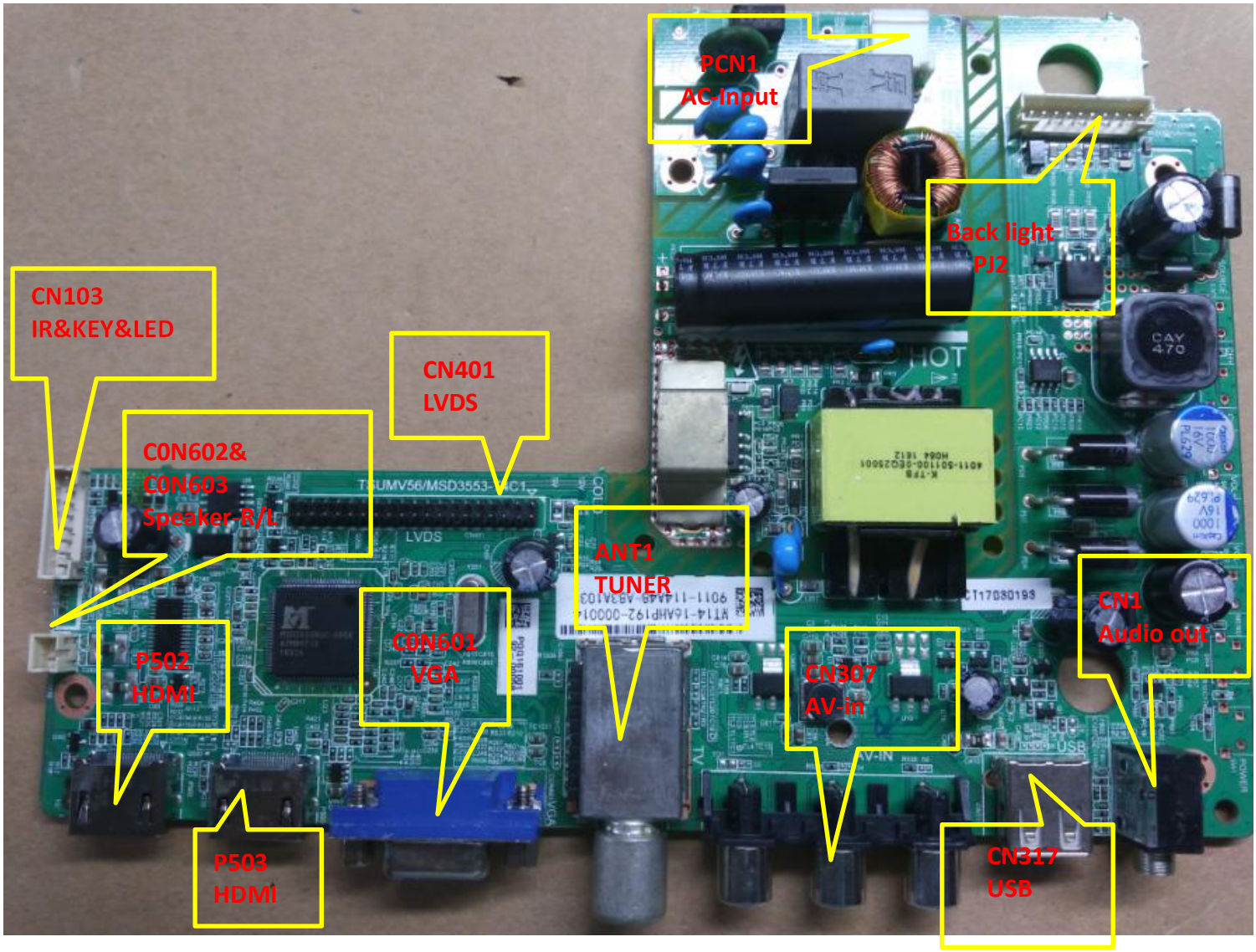

3. Mechanical Instructions

3.1 Cable dressing

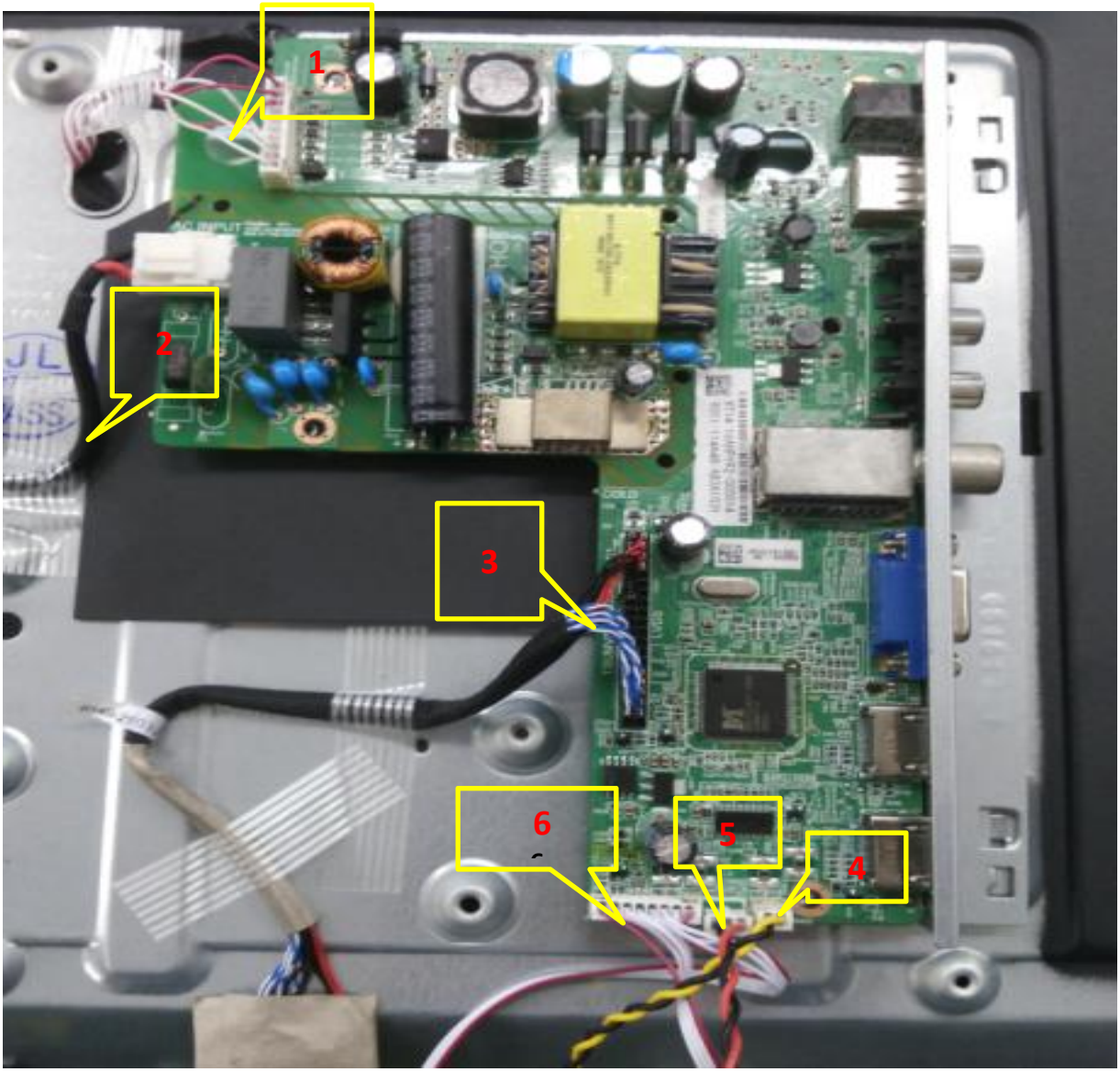

Serial no	part description	function
1	Backlight wire	Connect to PJ2
2	Power wire	Connect to PCN1
3	LVDS wire	CN401 to T-CON board
4	Speaker wire	CON602 to speaker (yellow black wire)
5	Speaker wire	C0N603 to speaker (red black wire)
6	two-terminal wire	CN103 toKEY& IR board&LED

Cable dressing(32" 3052 series)

3.2 Assembly/Panel Removal

3.2.1 Stand removal

1. Remove the fixation screws [1] 4pcs ,that secure the stand
2. Take the stand bracket out from the set.

3.2.2 IR board

1. Unplug the connector from the SSB.
   Caution: be careful, as these are very fragile connectors!
2. Remove all the fixation screws(3) ,then Remove the fixation screws(4)Ir board and LED together,from the IR board control unit.

When defective, replace the whole unit

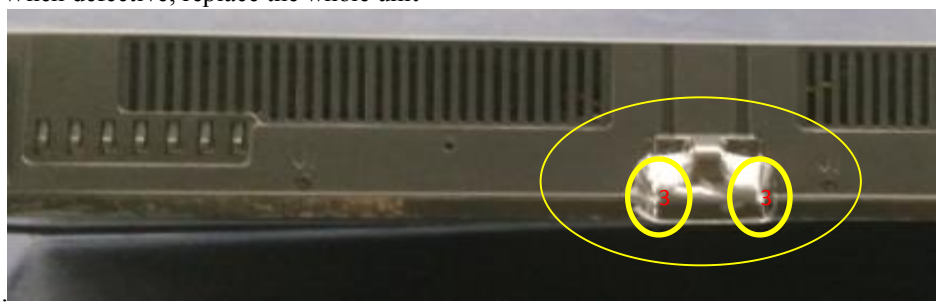

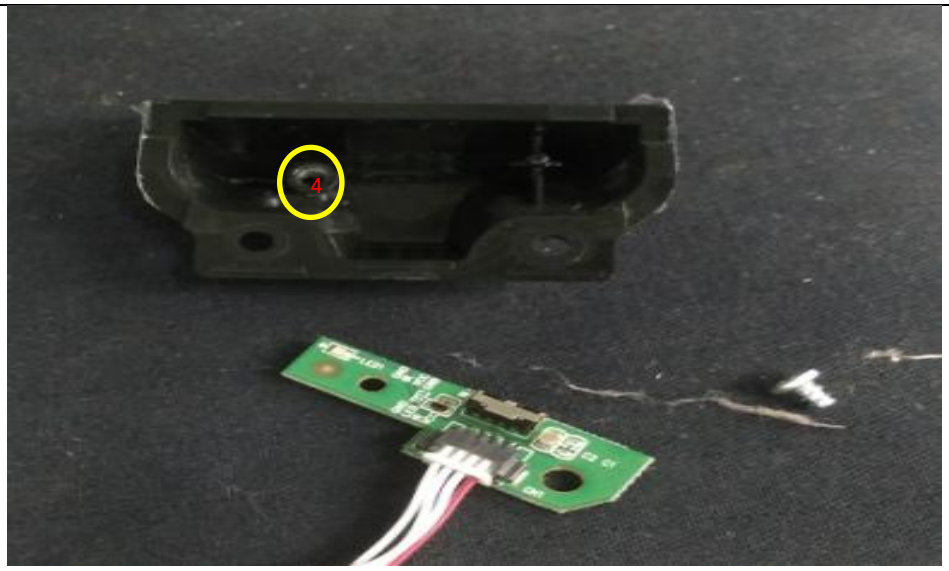

3.2.3 Rear Cover

Warning: Disconnect the mains power cord before removing the rear cover.

1. Remove fixation screws [2] that secure the back cover..
2. Gently lift the rear cover from the TV. Make sure that wires and cables are not damaged while lifting the rear cover from the set.
3. Remove fixation screws[2 that secure the back cover.unplug connectors

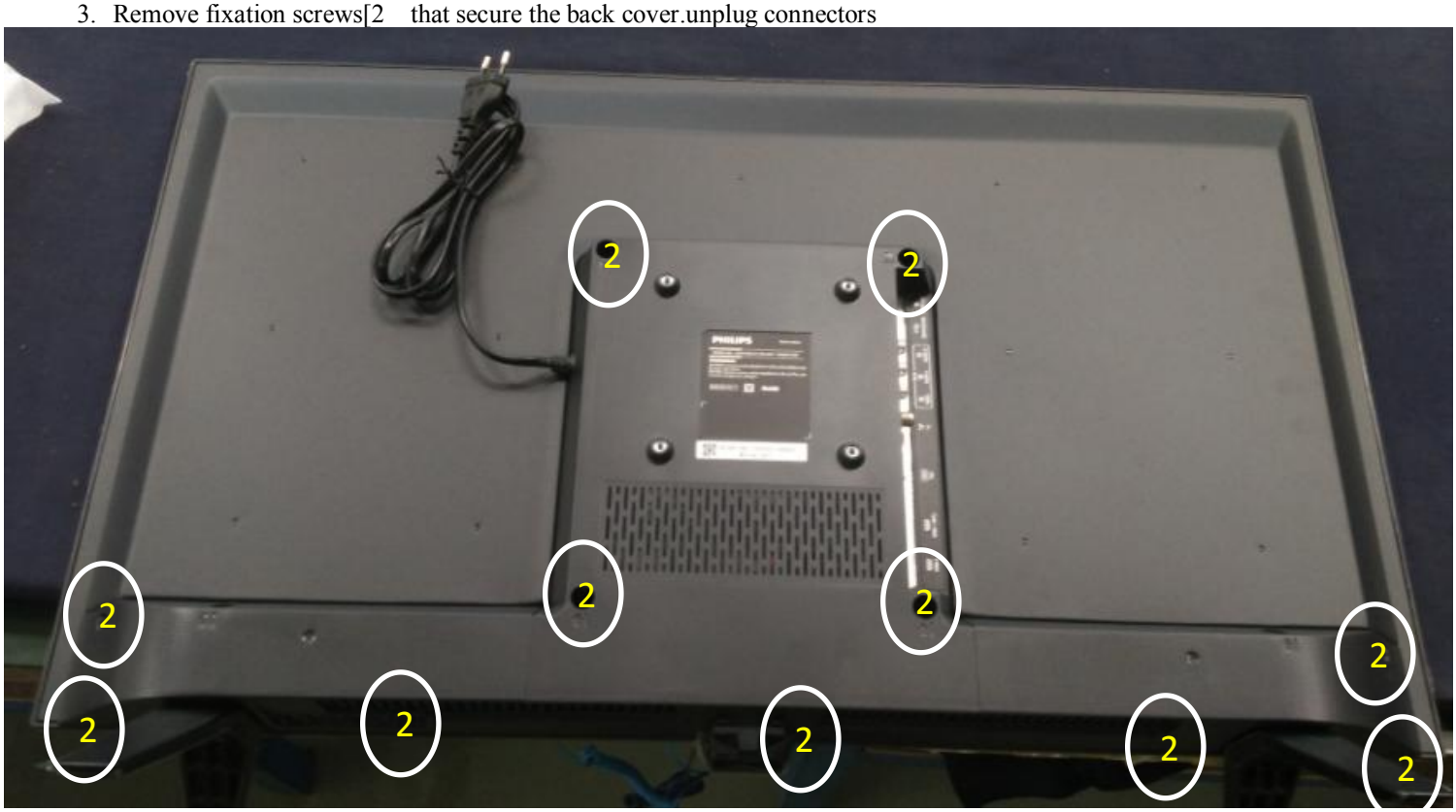

3.2.4 Power Supply Unit (PSU)

Caution: it is mandatory to remount all different screws at their original position during re-assembly. Failure to do so may result in damaging the PSU.

1. Gently unplug all connectors from the PSU.

1. Remove all fixation screws from the PSU.
3. The PSU can be taken out of the set now.

3.2.5 Speakers

1. Gently release the tapes that secure the speaker cables.
2. Unplug the speaker connector from the SSB.
3. Take the speakers out.

When defective, replace the both units.

3.2.6 LCD Panel

1. Remove the SSB as described earlier.
2. Remove the PSU as described earlier.
3. Remove the keyboard control panel as described earlier.
4. Remove the stand bracket as described earlier.
5. Remove the IR/LED as described earlier.
6. Remove the fixations screws that fix the metal clamps to the front bezel. Take out those clamps.
7. Remove all other metal parts not belonging to the panel.
8. Lift the LCD Panel from the bezel.

When defective, replace the whole unit.

4. Service Modes

Factory Mode

Purpose

- To perform extended alignments.

Primary menu	Secondary menu	Value,remark
ADC ADJUST	MDOE	VGA,YPBPR,Selection
	R-GAIN	Front-end gain adjustment
	G-GAIN	
	B-GAIN	
	R-OFFSET	Clamp level adjustment
	G-OFFSET	
	B-OFFSET	
	AUTO ADC	ADC automatically adjust
PICTURE MODE	Input Source	Source Selection
	MODE	Dynamic/Standard/Sotf/User
	BRIGHTNESS	BRIGHTNESS
	CONTRAST	CONTRAST
	COLOR	COLOR
	SHARPNESS	SHARPNESS
	TINT	TINT
	Copy all	No function
W/B ADJUST	inputsource	Source Selection
	TEMPERATURE	Cool, Standard, Warm
	R-GAIN	White level adjustment
	G-GAIN	
	B-GAIN	
	R-OFFSET	Black level adjustment
	G-OFFSET	
	B-OFFSET	
	Copy all	No function
SSC SETTING	MIU Enable	DDR spectrum enable
	MIU0 Span	Exhibition frequently wide
	MIU Step	Spread spectrum step
	LVDS enable	LVDS spectrum enable
	LVDS Span	Exhibition frequently wide
	LVDS Step	Spread spectrum step
	LVDS swing	LVDS swing
Spectial set	2HOUR OFF	2hours power off enable
	WDT	Watch dog on/off
	White pattern	White pattern selection
	Restore user default	Factory reset
	PVR_RECORDALL	PVR Record on/off
	Power	Power mode selection
	Mirror	Mirror function selection
	Ageing mode	Ageing mode enable
VIF	Vif 1	Vif set
	Vif 2	Vif set
	Vif 3	Vif set
Qmap adjsut	PQ setting	
PEQ	PEQsetting	
OverScan	Overscan_resolution	Reselution select
	Overscan_hsize	Adjust overscan H size
	Overscan_hposition	Adjust overscan H position
	Overscan_vsize	Adjust overscan V size
	Overscan_vposition	Adjust overscal V position
other	Test pattern	
	UART DEBUG	DEBUG ON/OFF
	HDMI CEC/ARC	CEC/ARC ON/OFF

	Backlight	Adjust backlight
CI+ key usb upgrade	CI+ key usb upgrade	
SW information	SW information	
Non-linear	MODE	Feature Selection
	OSD 0	Curve adjustment
	OSD 25	
	OSD 50	
	OSD 75	
	OSD 100	
Channel table1	KTC factory Frequecy table set	
CI factory setting	No function	
Channel table2	KTC factory Frequecy table set	
Channel dvbt	KTC factory Frequecy table set	

5. Software Upgrading and Panel Code

5.1 Software Upgrading

5.1.1 Software upgrade tools and materials

* Personal computer （WINDOWS XP or WINDOW7 32 bit operating system,USB2.0）
* AC100~240V power supply and power cord
* ISP burning board
* ISP burning board driver
* ISP Tool V4.5.2.8.SZ.exe
* VGA wire
* USB flash disk（2.0 version，Capacity not more than 8G）
* Mainboard software

5.1.2 Operations and procedure of software upgrading:

(1). Changed the file name to "MERGE.bin", then store software in the FAT32 format blank U disk.

(2). Insert USB flash disk into the USB upgrade port, upgrade the software according to the following the operating instructions:：

Method 1（Method 1 will not erase the original EDID and HDCP KEY on mainboard. Easy operation, you only need one U disk to upgrade. So we require customer use this way to upgrade.）：

①. Start the machine and wait the normal picture display, press the MENU button on the remote control, will be popping up the main menu, press the 8202 number keys and enter the Factory Setting menu.

②. Press up/down keys to move the cursor to "software update(USB)" function menu, then press right key to select "YES", to implement USB upgrade command:

a. After prompt "File system init error", means that the machine have found USB device, but did not find the needing

Record the R/G/B-GAIN and R/B/G-OFFSET value under the

YPbPr(SD) and YPbPr(HD) mode, to be replaced the recorded value

after the machine software upgrade

upgrade software, please check the software name is correct or format the U disk again and then copy software.

b. After prompt "USB Connect Detect fail", means that the machine does not find USB device, check if the USB device has been inserted into, or change another U disk and try again.

③. Display percentage progress prompts and about 10 seconds later, the machine black screen and restart automatically, means that the machine complete the upgrade process, turn off the machine first, then pull out the U disk.

Select Software Update(USB), press right key or OK key to enter.

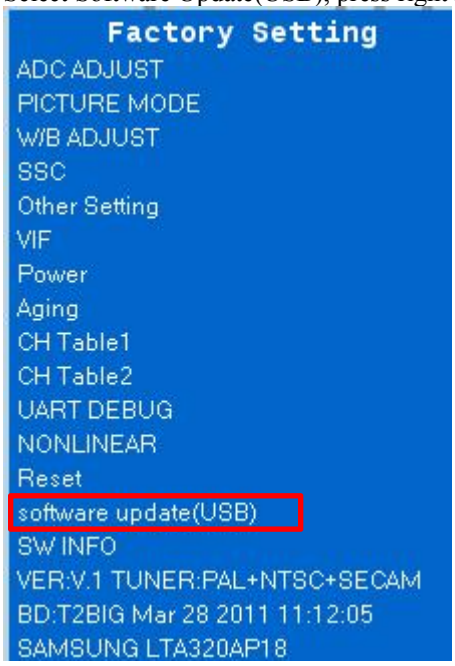

Software update menu will pop up when press confirm key, then select “Yes” to confirm:

The process of software updating:

Method 2： Keep pressing VOL+ and CH+ keys on the machine panel, power on the machine, the standby light flashes quickly after about 5 seconds, standby light goes out and turn into lighting after about a minute, means that upgrade is Completed.

(3). Notices：

①. When the machine Upgrading (U disk light flash), do not remove U disk or switch off the power, otherwise it will destroy the software and lead can not upgrade.

②. The machine must be power off when inserted or pulled out U disk, to avoid damaging U disk or machine.

③. Because of compatibility between machine and U disk, some machines will not flicker during upgrading. Please change U disk (The capacity of U disk is not more than 2G) or use method 1 to upgrade.

④. If the display screen can't display menu normally, it cannot use "method 1" to upgrade, you can use Mstar ISP Tools to upgrade except method 1 and method 2.

5.2 Panel Code

Press the following key sequence on a standard RC transmitter: “8202” directly followed by MENU, can see the panel type information from factory menu, see the Panel PN from the configuration table

CTN_ALT BOM#	Panel Type	Panel PN
32PHA3052/56	K320WD82-SC240A2	7422-320SSK-335A8111-F

6. Circuit Descriptions

6.1 Implementation

The 3052is covered by TSUMV56 platform. The major deltas versus its predecessor support DVB-T, with multi-media, Video out
The MSD6306 chassis comes with the following stylings:

- Series 3052 32PHA3052/56

6.1.1 Implementation

Key components of this chassis are:

- TUNER POWER AS1117-33
- VDDC POWER
- TSUMV56-T4C1
- 3.3V STANDBY AS1117 -33
- 64 Mbit SPI FLASH
- HDMI1 ARC
- HDMI2 PORT

6.1.2 Block diagram

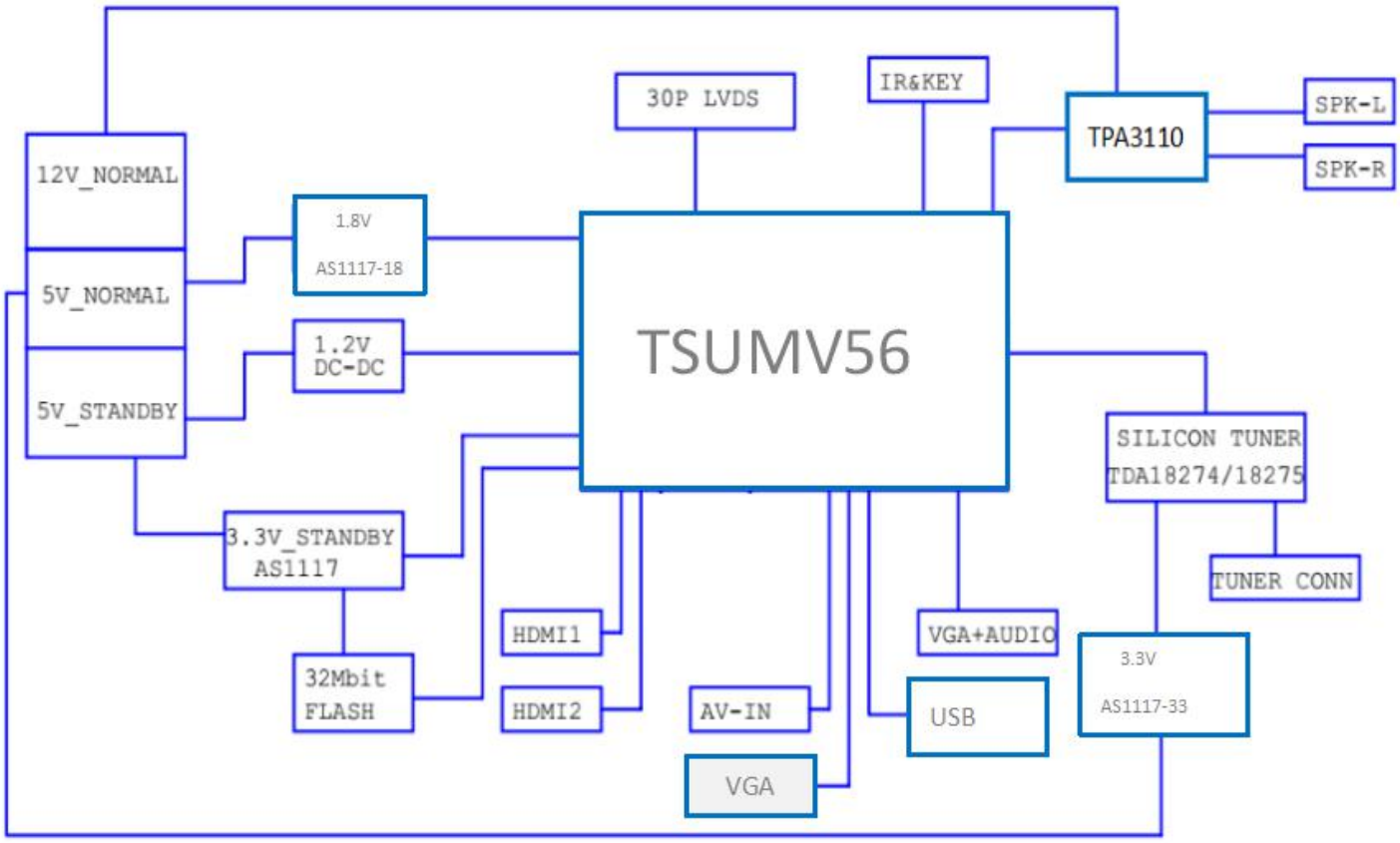

6.2 Power Supply

Power architecture of this platform.

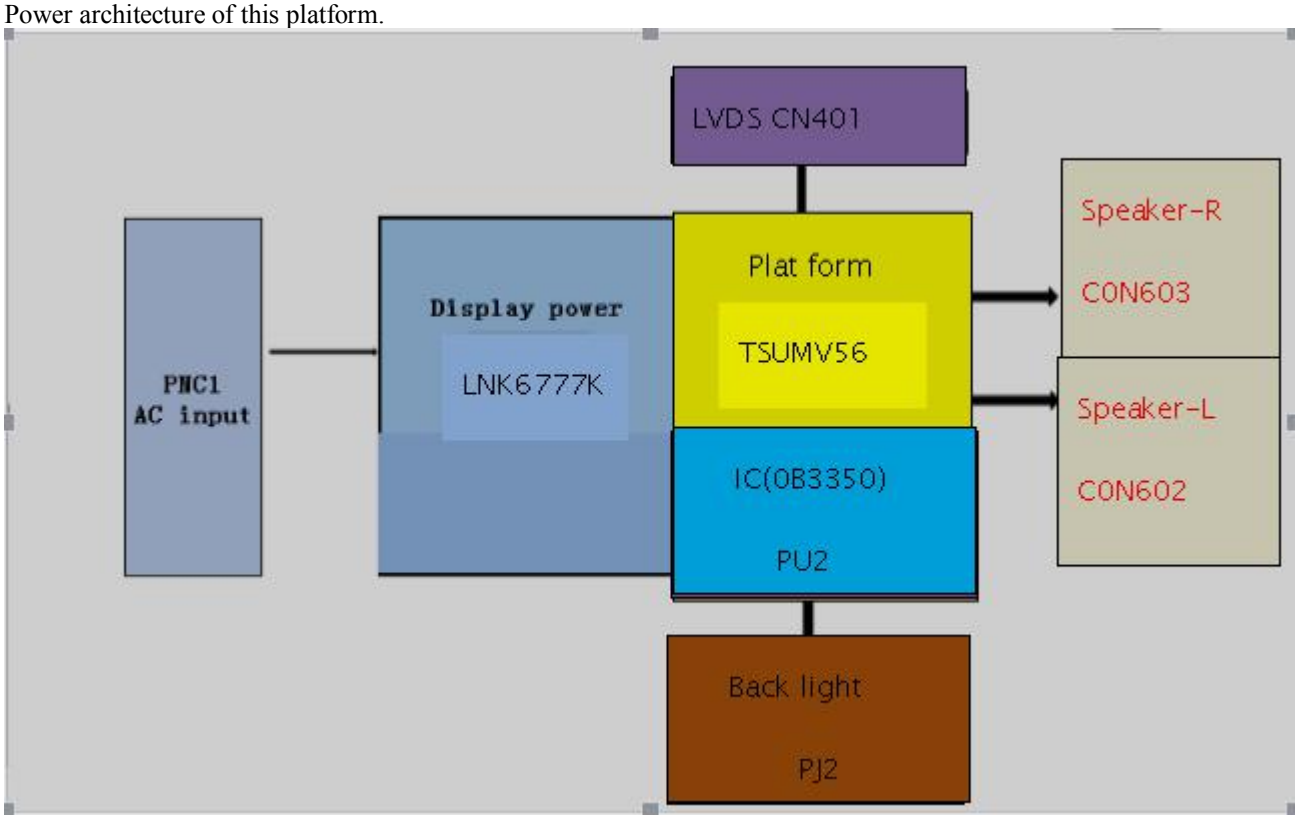

6.2.1 Power Supply Unit

All power supplies are a black box for Service. When defective, a new board must be ordered and the defective one must be returned, unless the main fuse of the board is broken. Always replace a defective fuse with one with the correct specifications! This part is available in the regular market.

Consult the Philips Service web portal for the order codes of the boards.

Important delta's with the platform are:

• New power architecture for LED backlight

• "Boost"-signal is now a PWM-signal + continuous variable

The control signals are:

• PS-ON

• Lamp "on/off"

• DIM (PWM) (not for PSDL)

In this manual, no detailed information is available because of design protection issues.

• +12 output (on-mode)

• +12V_audio (audio AMP power)

• Output to the display; in case of

- IPB: High voltage to the LCD panel
- PSL and PSLS (LED-driver outputs)
- PSDL (high frequent) AC-current.

6.2.2 Diversity

The diversity in power supply units is mainly determined by the diversity in displays.

The following displays can be distinguished:

• CCFL/EEFL backlight: power panel is conventional IPB

• LED backlight:

- side-view LED without scanning: PSL power panel
- side-view LED with scanning: PSLS power panel
- direct-view LED without 2D-dimming: PSL power panel
- direct-view LED with 2D-dimming: PSDL power panel.

PSL stands for **P**ower **S**upply with integrated **L**ED-drivers.

PSLS stands for a **P**ower **S**upply with integrated **L**ED-drivers with added **S**canning functionality (added microcontroller).

PSDL stands for a **P**ower **S**upply for **D**irect-view **L**ED backlight with 2D-dimming.

6.3 DC/DC Converters

The on-board DC/DC converters deliver the following voltages(depending on set execution):

• +3V5-SB, permanent voltage for the Stand-by Power system
• +3V3-STANDBY,voltage for IR/Key board
• +12V, input from the power supply for the panel common(active mode)
• +12V, input from the power supply for LNB supply
• +3V3-FLASH, voltage for FLASH when TV on
• +3.3VA_T2, +1.2V_T2 voltage for Demodulator IC channel decoder
• TUNER_3V3, supply voltage for tuner
• +5V-SW, input intermediate supply voltage for USB Power
• +12V-AUDIO1 for the AUDIO AMP
• +1.8V-Main chip

6.3.1 Power tree

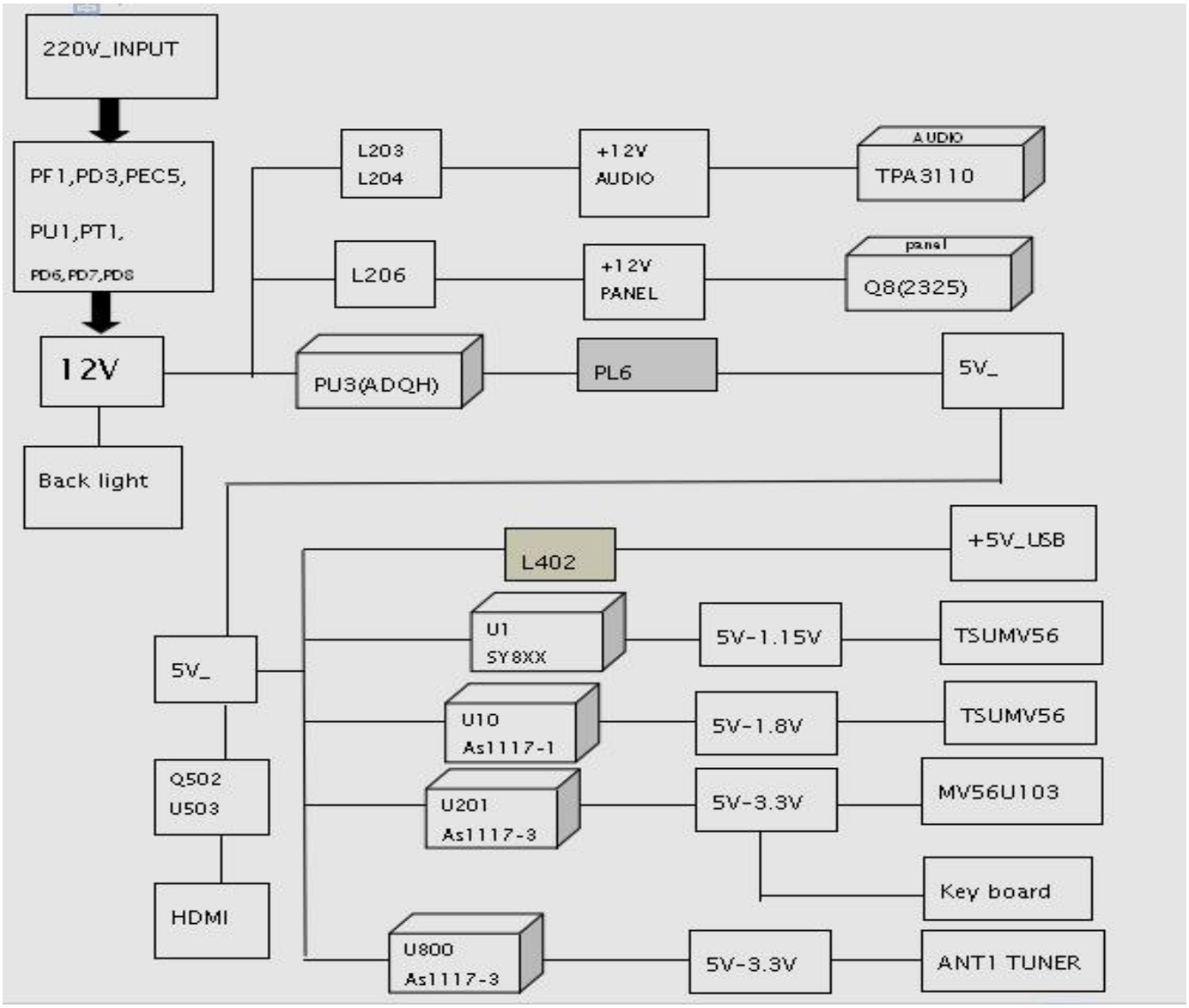

6.3.2 Power layout SSB

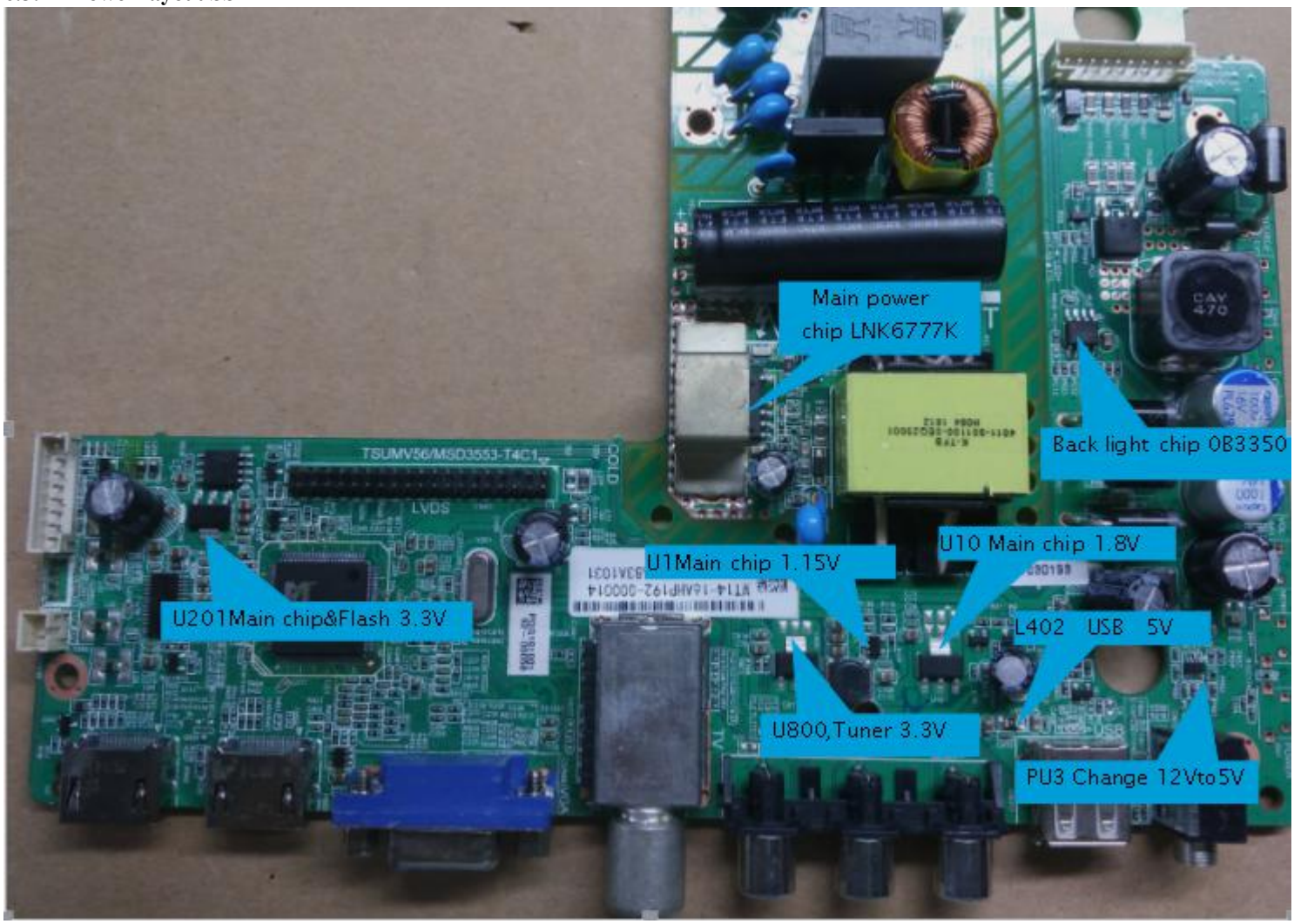

6.4 Front-End Analogue and DVB-C, DVB-T; reception

6.4.1 DVB-C part

The Front-End for analogue tuner consist of the following key components:

- SCALER TSUMV56 Processor
- TUNER 18275

Below find a block diagram of the front-end application for DVB-C part.

18275

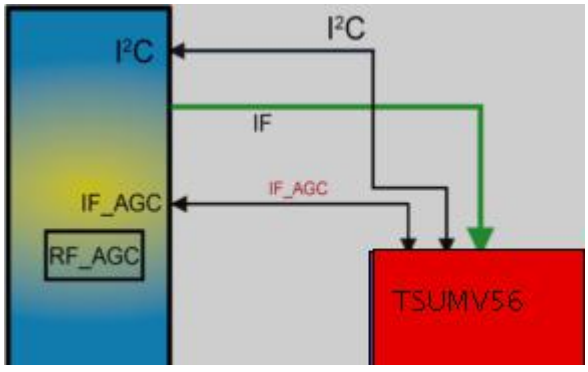

6.4.2 DTB-T2 part

The Front-End for DVT part consist of the following key components:

• TUNER 18275

• SCALER TSUMV56

Below find a block diagram of the front-end application for DTV part.

18275

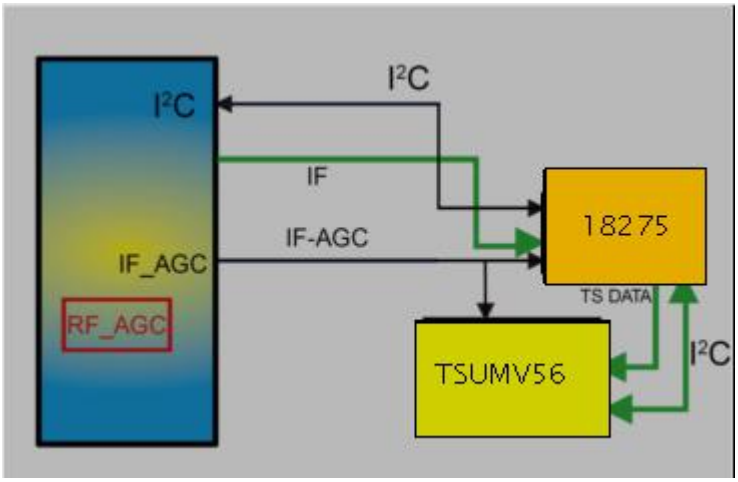

6.5 HDMI

Refer to below for the application.

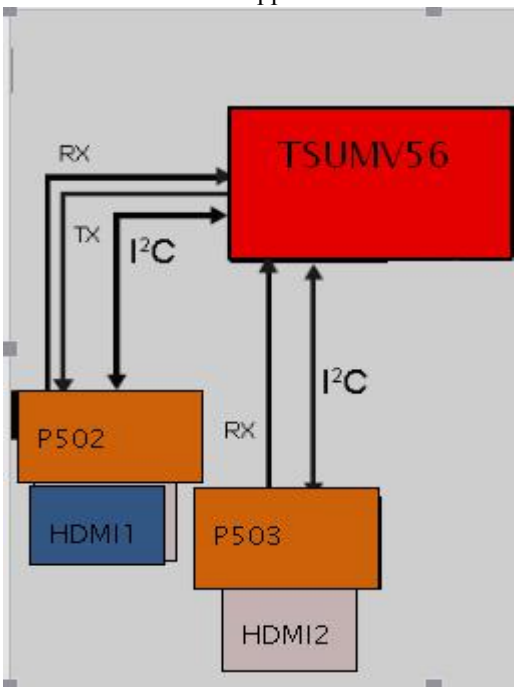

The following HDMI connector can be used:

• HDMI 2: HDMI input (TV digital interface support HDCP

• HDMI 1: HDM IMHL input (TV digital interface support)

• +5V detection mechanism

• Stable clock detection mechanism

• HPD control

• Sync detection

• TMDS output control

• CEC control

• ARC control

• MHL control

6.6 Video and Audio Processing - TSUMV56

The TSUMV56 is the main audio and video processor (or System-on-Chip) for this platform. It has the following features:

1. Worldwide multi-standard analog TV demodulator

2.PAL/SECAM/DVB-T/DVB-T2 /DVB-C demodulators

3.1920*1080@60Hz direct drive

4. Powerful CPU core

5. A transport de-multiplexer

7. A muti-standard video decoder

8. Rich format audio codec

10. HDMI1:receiver

11. MHL input

12. 2D converter

14. PWM dimming (LED backlight)

15. Two-link LVDS,

1 OVERVIEW

The World-Leading Audio/Video Technology: The The TSUMV56 supports Full MPEG2/4/H.264 video decoder standards, and JPEG. The TSUMV56 family consists of a DTV front-end demodulator, a backend decoder and a TV controller and offers high integration for advanced applications. It integrates a transport de-multiplexer, a high definition video decoder, an audio decoder, a -link LVDS transmitter, and a NTSC/PAL/SECAM TV decoder .The TSUMV56enables consumer electronics manufacturers to build high quality, low cost and feature-rich DTV. The TSUMV56 also supports MediaTek MDDiTM de-interlace solution which can reach very smooth picture quality for motions. The special color processing technology provides a natural, deep colors and true studio quality video. Moreover, . The TSUMV56family has built-in high resolution and high-quality audio codec.

Rich Features for High Value Products:The TSUMV56 family enables true single-chip experience. It integrates high-quality HDMI1.4, high speed VGA ADC, a-link LVDS, USB2.0 receiver , and ATSC/DVB-T/DVBC/DTMB/ISDB-T demodulators.

All New FHD@60Hz Experience:The TSUMV56 family provides consumers with FHD 60Hz direct drive.

WW Common Platform Capability: The TSUMV56family supports ATSC, DVB-T, DVB-C, and ISDB-T demodulation functions. It reserves transport stream inputs for external demodulators for other countries or areas. TV maker can easily port the same UI to worldwide TV models. First-class adjacent and co-channel rejection capability grants excellent reception.Professional error-concealment provides stable, smooth and mosaic-free video quality.

7. IC Data Sheets

7.1 LNK6777K

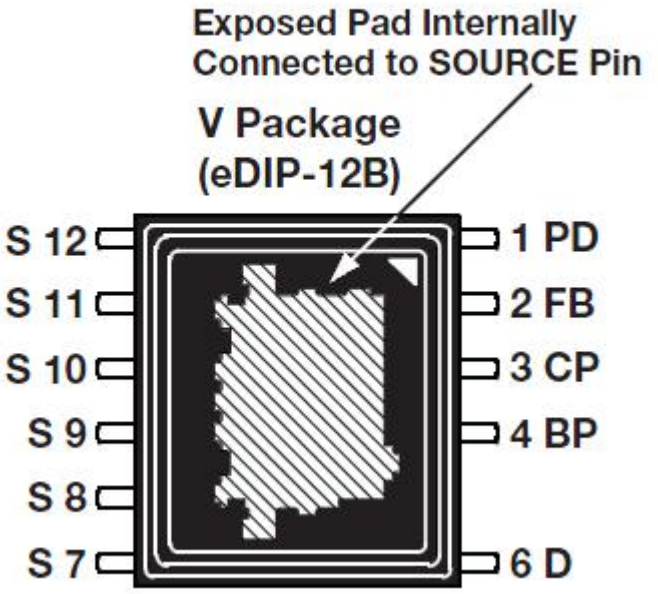

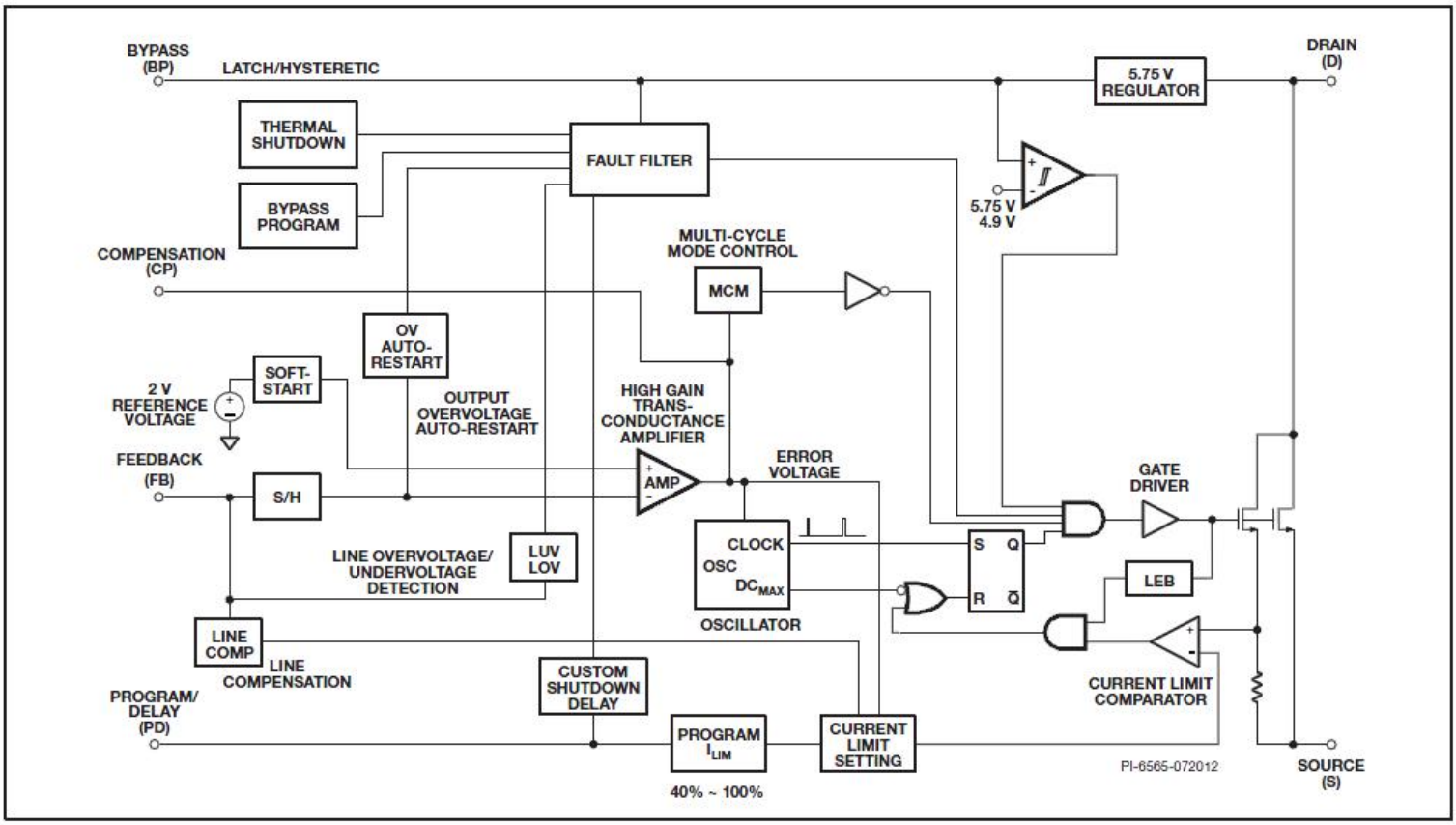

7.2 SY800XX

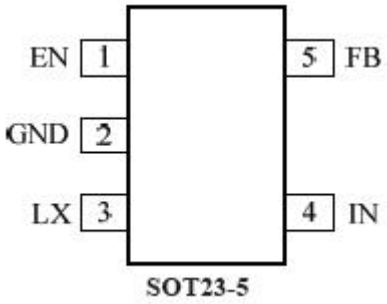

Block Diagram

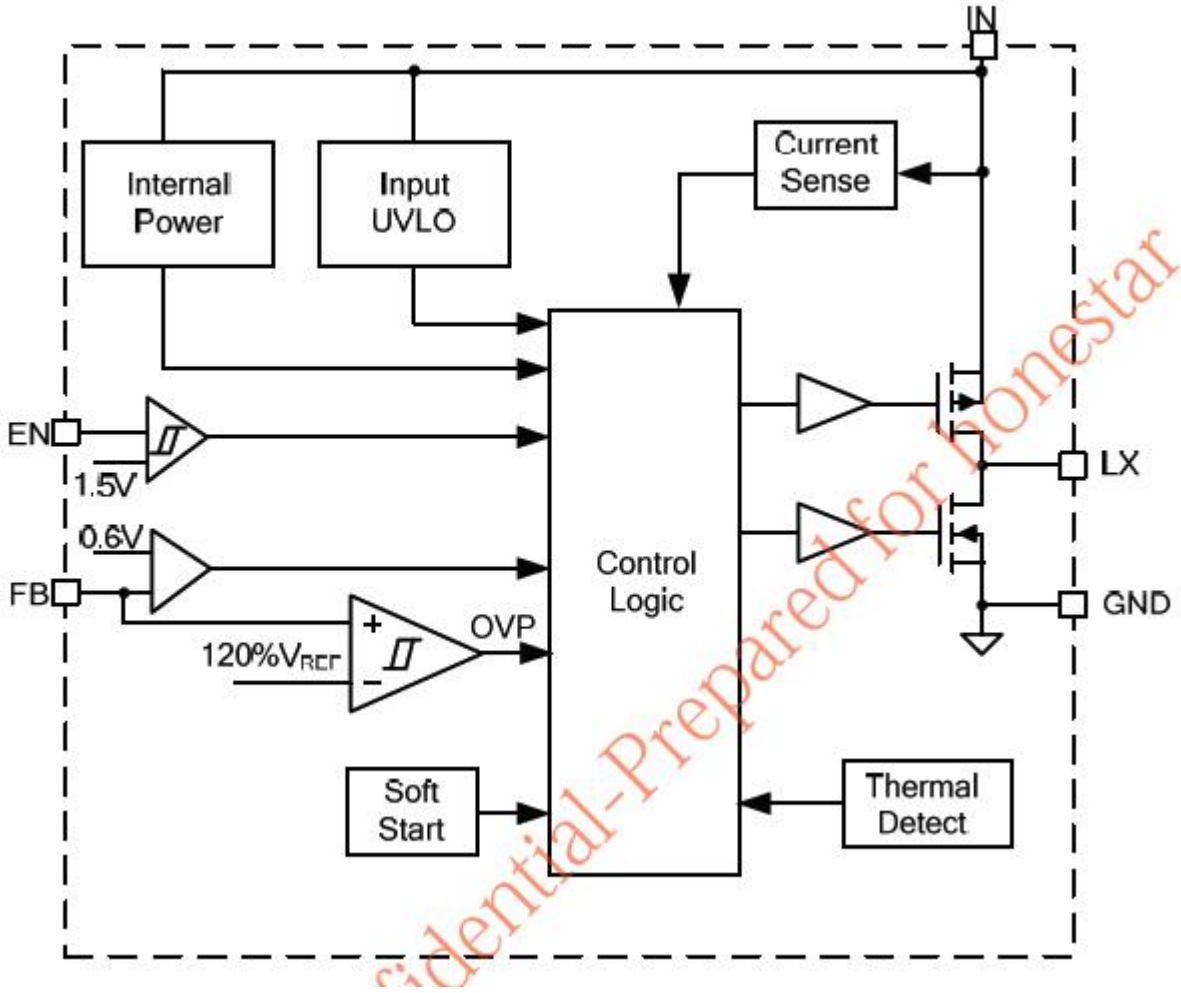

Confidential-Prepared for Ronestar

7.3 Sound 0B6220

PWP (TSSOP) PACKAGE
(TOP VIEW)

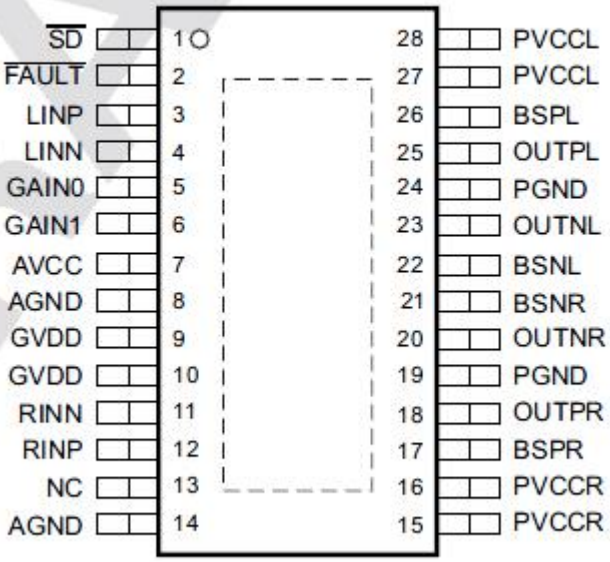

FUNCTIONAL BLOCK DIAGRAM

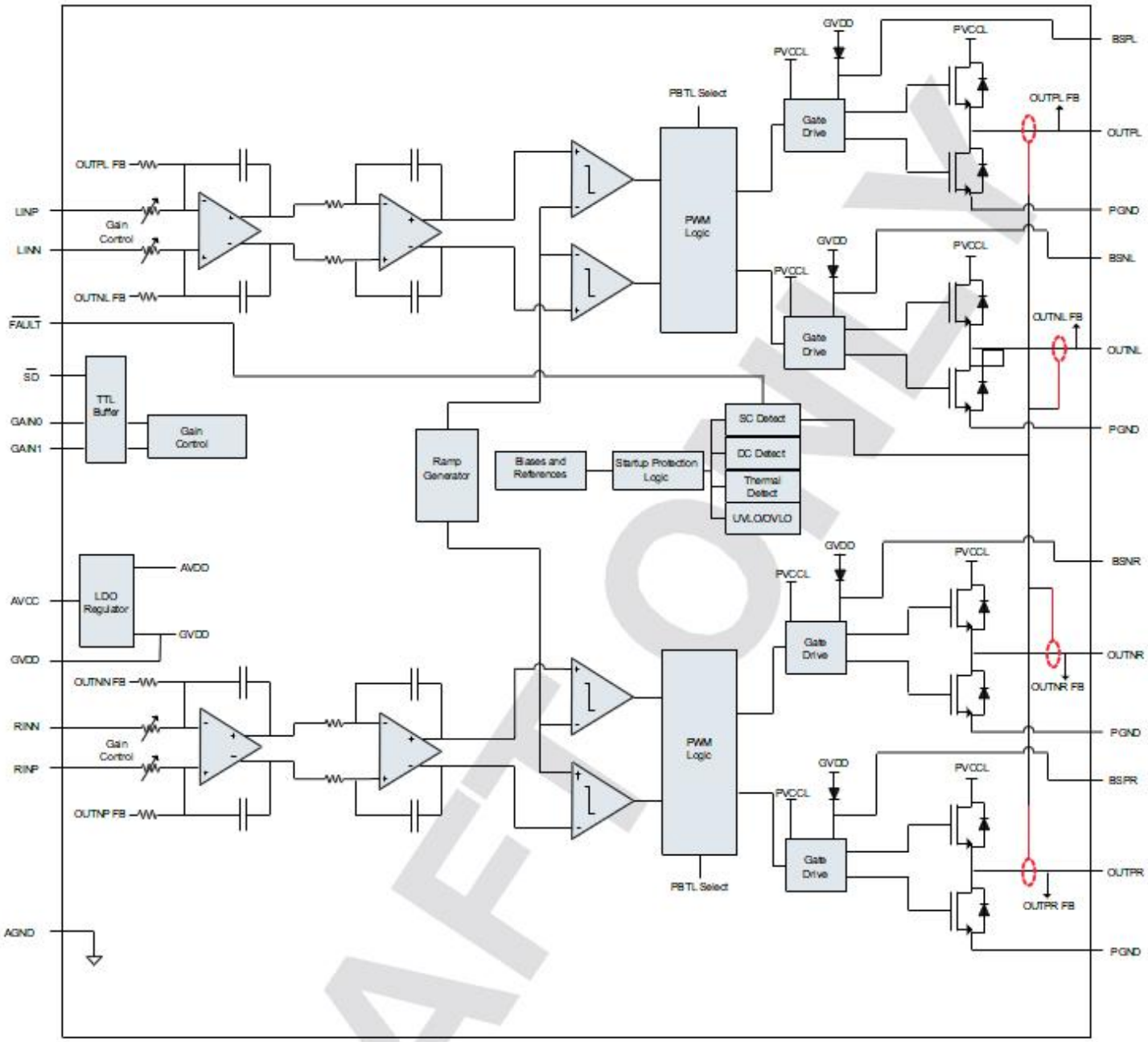

AFTOMY

8. Circuit Diagrams

TSUMV56/MSD3553-T4C1

date	change list
2016-11-21	V3.0

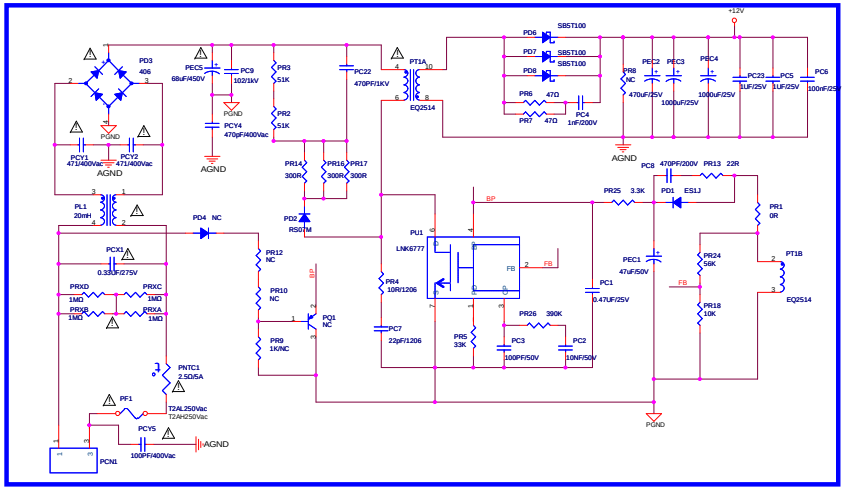

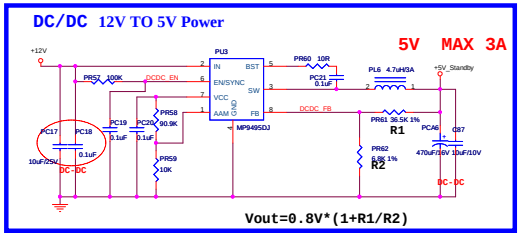
DC/DC 12V TO 5V Power
5V MAX 3A
Vout=0.8V*(1+R1/R2)

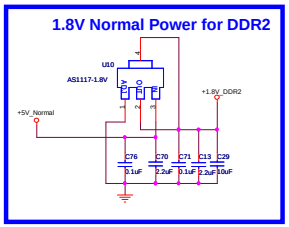
1.8V Normal Power for DDR2

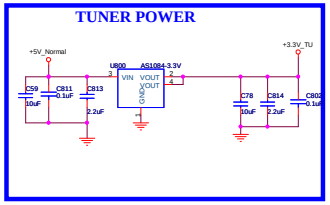
TUNER POWER

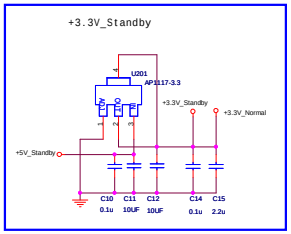
+3.3V_Standby

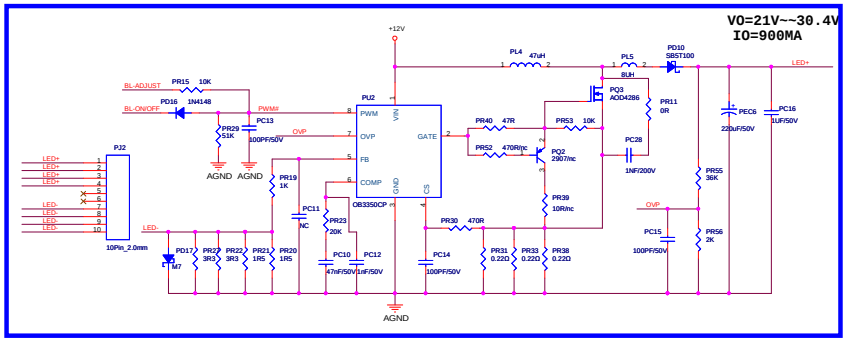
VO=21V~~30.4V
IO=900MA

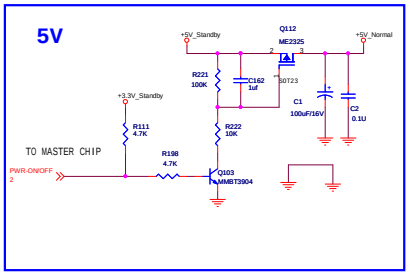
5V
TO MASTER CHIP

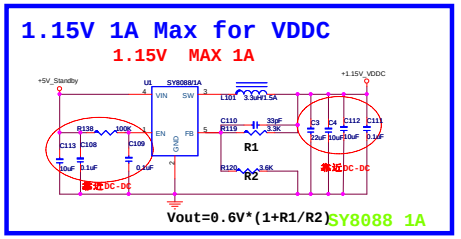
1.15V 1A Max for VDDC
1.15V MAX 1A
Vout=0.6V*(1+R1/R2)
SY8088 1A

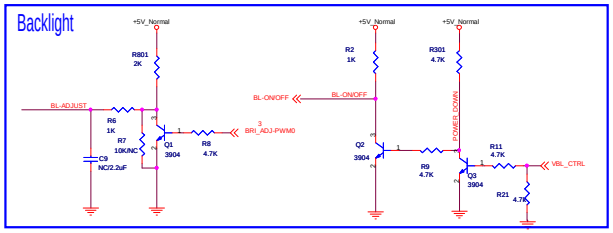
Backlight

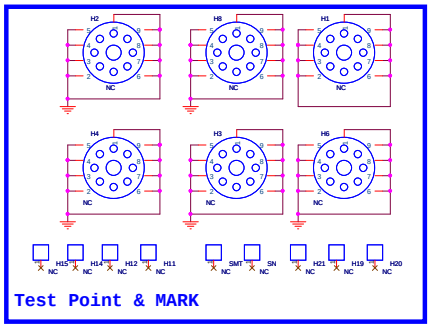
Test Point & MARK

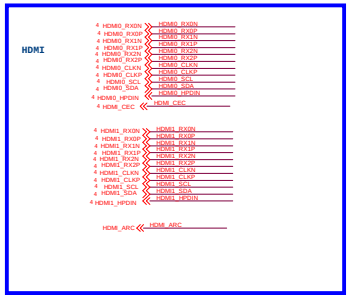
HDMI
HDMI_ARC

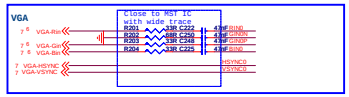
VGA
Close to MST IC with wide trace

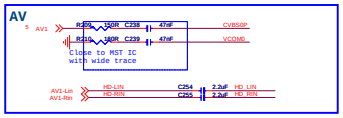
AV
Close to MST IC with wide trace

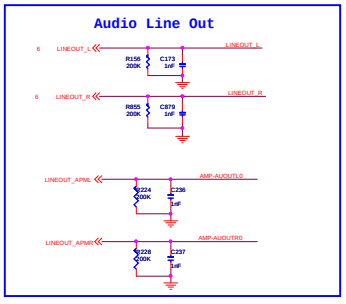
Audio Line Out

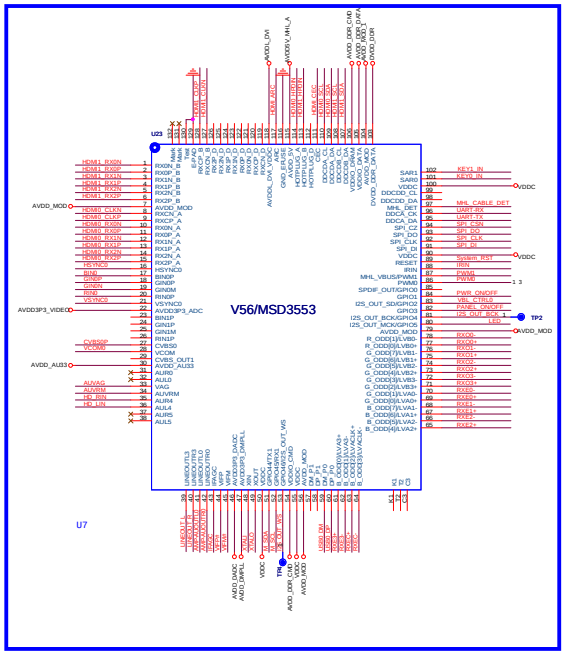
V56/MSD3553
U7

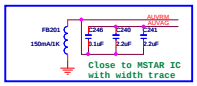
Close to MSTAR IC with width trace

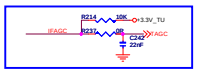

VIF IN

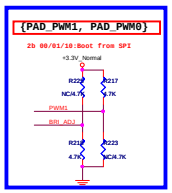
CHIP_CONFIG
{PAD_PWM1, PAD_PWM0}
2b 00/01/10:Boot from SPI

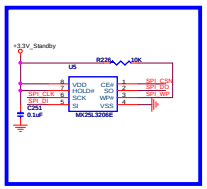
SPI NOR FLASH

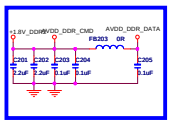

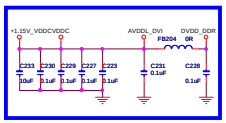

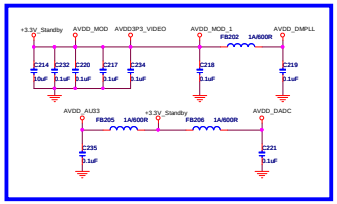

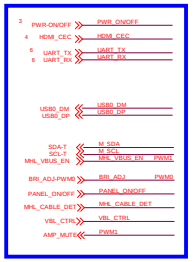
OTHER

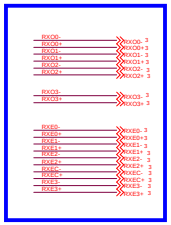
LVDS

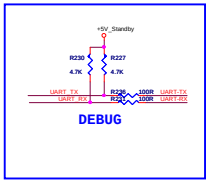
DEBUG

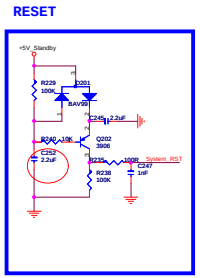
RESET

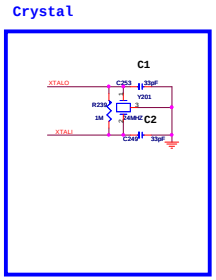
Crystal

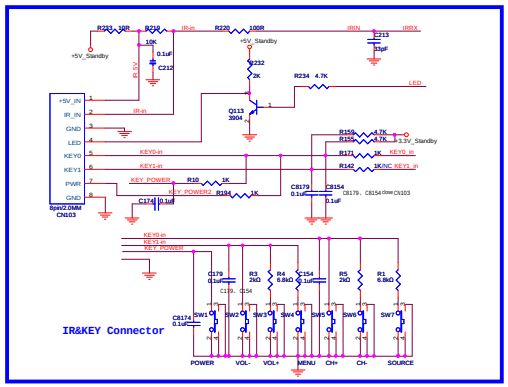
IR&KEY Connector
POWER
VOL-
VOL+
MENU
CH+
CH-
SOURCE

LVDS

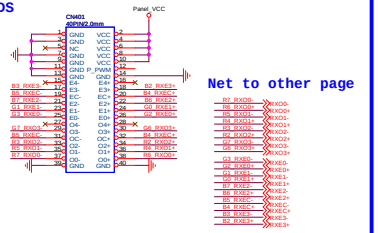

Power for panel

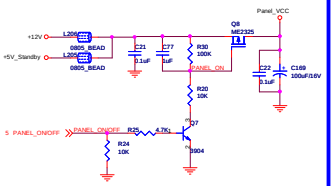

Audio OUT

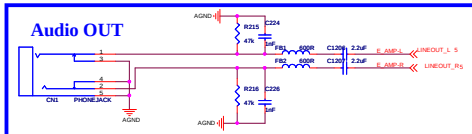

Power amplifier

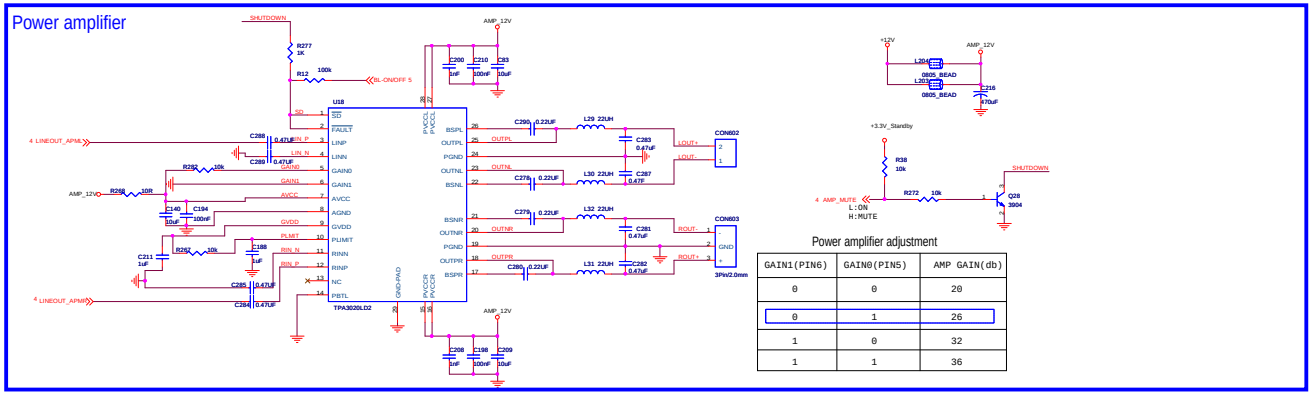

Power amplifier adjustment

GAIN1(PIN6)	GAIN0(PIN5)	AMP GAIN(db)
0	0	20
0	1	26
1	0	32
1	1	36

TDA18275HN TUNER

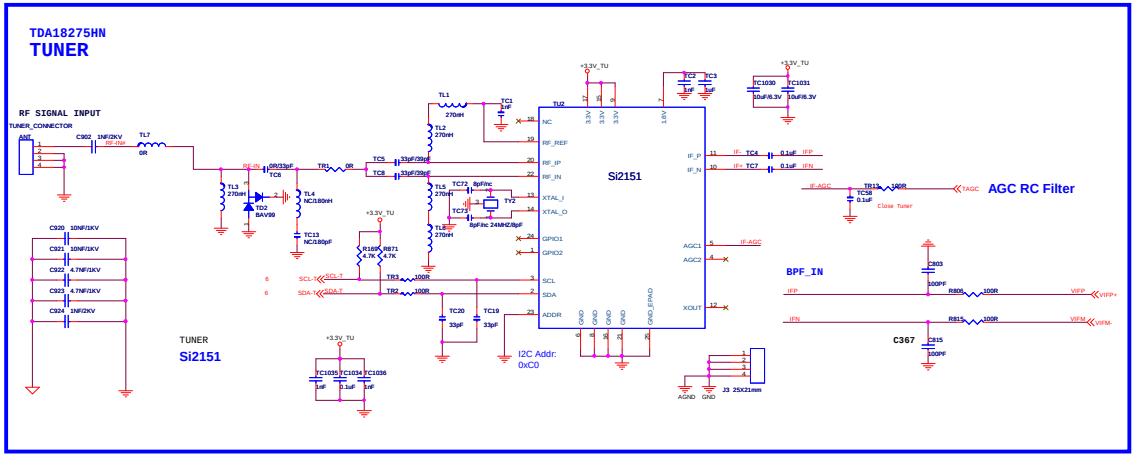

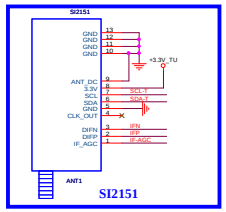

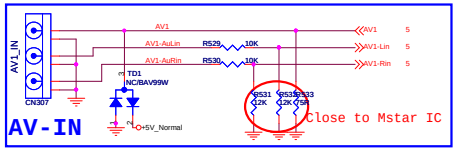
AV-IN
AV1_IN
CN307
AV1
AV1-AuLin
AV1-AuRin
R529 10K
R530 10K
TD1
NC/BAV99W
+5V_Normal
R531 12K
R533 12K
AV1
AV1-Lin
AV1-Rin
Close to Mstar IC

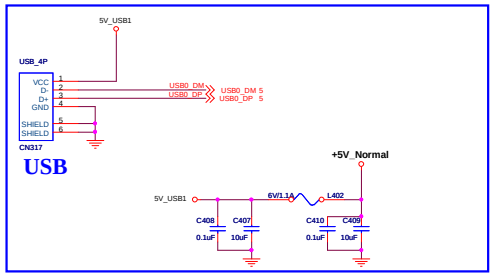
USB
USB_4P
CN317
5V_USB1
USB0_DM
USB0_DP
+5V_Normal
6V/1.1A
L402
C408 0.1uF
C407 10uF
C410 0.1uF
C409 10uF

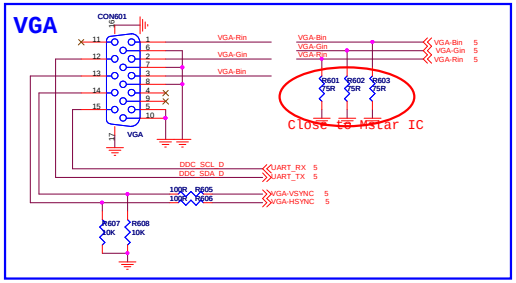
VGA
CON601
VGA-Rin
VGA-Gin
VGA-Bin
R601 75R
R602 75R
R603 75R
Close to Mstar IC
DDC_SCL_D
DDC_SDA_D
UART_RX
UART_TX
R605 100R
R606 10K
VGA-VSYNC
VGA-HSYNC
R607 10K
R608 10K

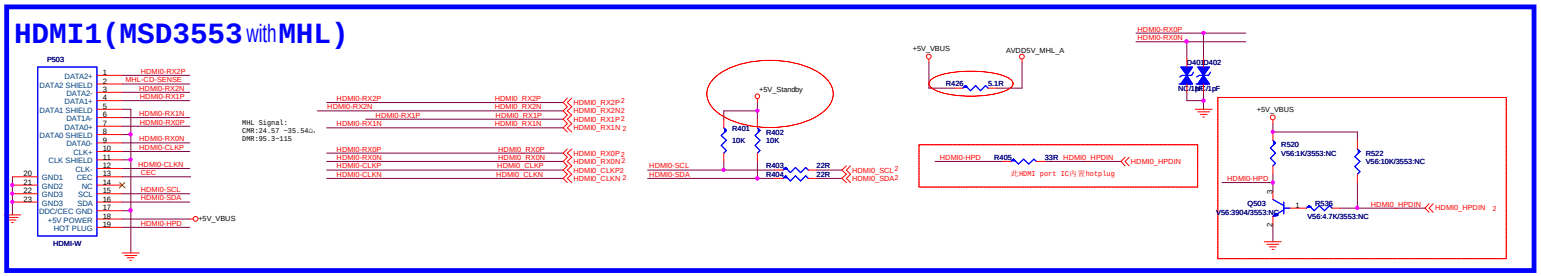
HDMI1(MSD3553 with MHL)
P503
HDMI-W
MHL Signal:
CMR:24.57 ~35.54Ω,
DMR:95.3~115
+5V_Standby
R401 10K
R402 10K
R403 22R
R404 22R
+5V_VBUS
AVDD5V_MHL_A
R426 5.1R
C401 NC/10pF
C402 NC/10pF
R405 33R
HDMI0_HPDIN
此HDMI port IC内置hotplug
R520 V56:1K/3553:NC
R522 V56:10K/3553:NC
Q503 V56:3904/3553:NC
R536 V56:4.7K/3553:NC

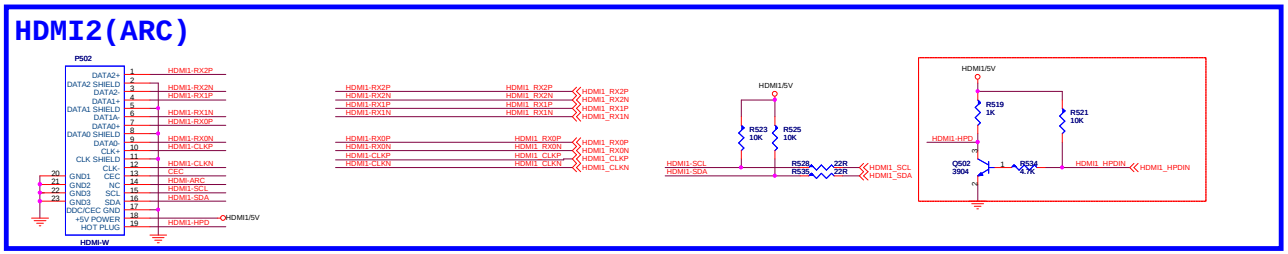
HDMI2(ARC)
P502
HDMI-W
HDMI1/5V
R523 10K
R525 10K
R528 22R
R535 22R
R519 1K
R521 10K
Q502 3904
R534 4.7K

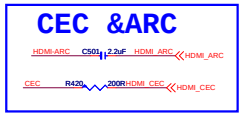
CEC &ARC
HDMI-ARC
C501 2.2uF
HDMI_ARC
CEC
R420 200R
HDMI_CEC

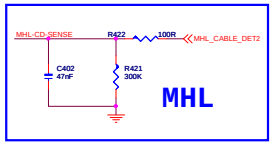
MHL
MHL-CD-SENSE
R422 100R
MHL_CABLE_DET2
C402 47nF
R421 300K

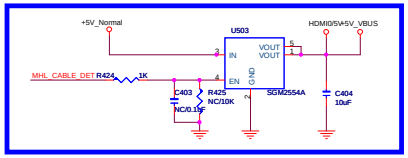
+5V_Normal
U503
SGM2554A
HDMI0/5V
+5V_VBUS
MHL_CABLE_DET
R424 1K
C403 NC/0.1uF
R425 NC/10K
C404 10uF

9. Styling Sheet

3052 32" series

REV.	ECN. NO.	APPD.	DATE

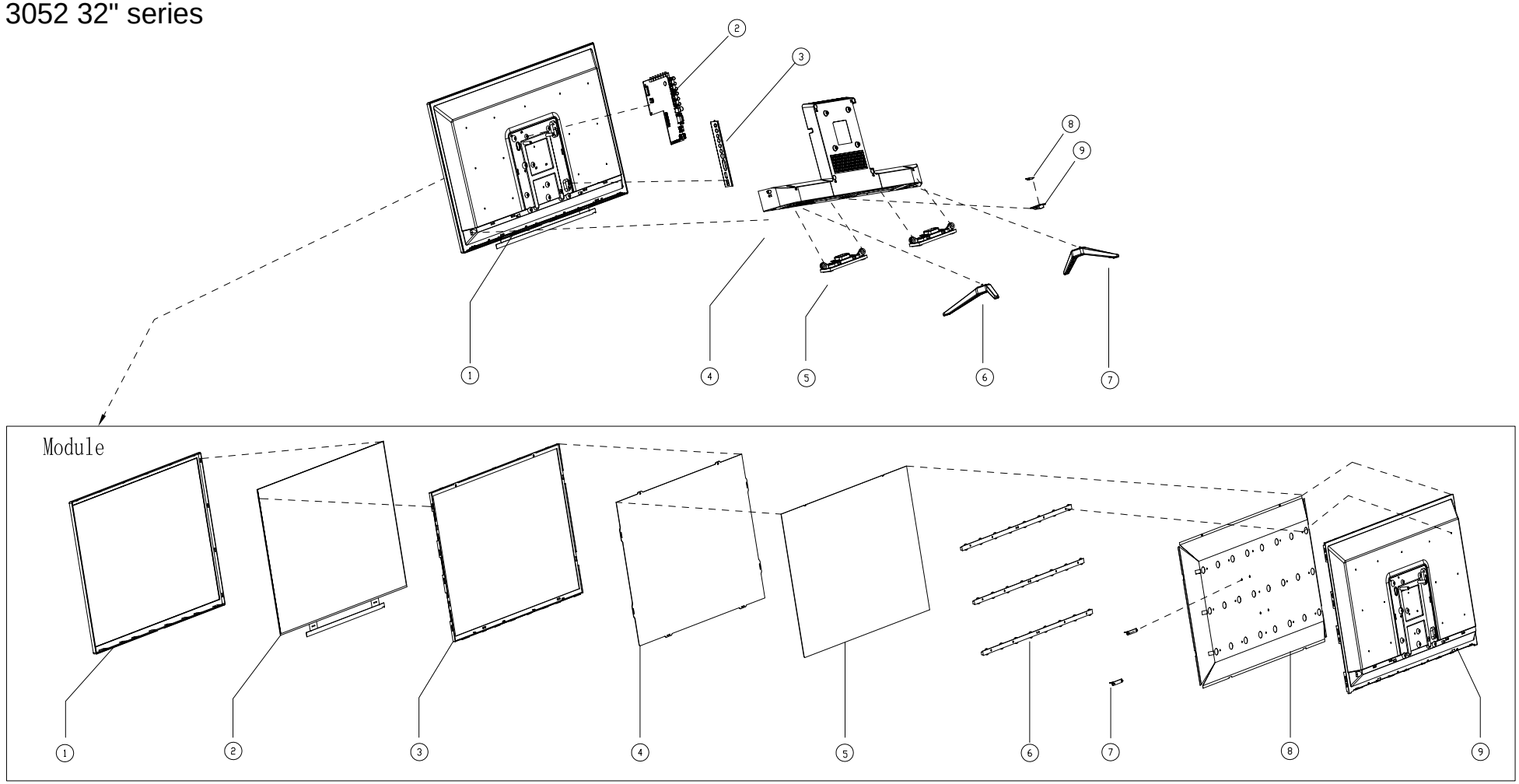

No.	Name	Vendor PN	Qty
9	Remote control receive	7014-32L81F-40001111	1
8	Remote control receive board	9015-1126IF-61002011	1
7	Plastic base	7003-32L82F-20700001	1
6	Plastic base	7003-32L82F-10700001	1
5	8Ω 10W speaker	7711-22R68A-50000011	2
4	Plastic back cover	7002-32L82F-14000001	1
3	Hardware baffle plate Side	7111-32L82F-42121401	1
2	Mainboard	9011-114A4A-A63A2121	1
1	K320WD82 Module Panel	7422-320SSK-335A8111-F	1

Detail for whole structure

No.	Name	Vendor PN	Qty
9	Back plate	7122-32L81F-18000031	1
8	Reflector	7823-K320WD-1215Z031	1
7	Supporting bracket	7022-K320WD-11000001	2
6	LCM light	7834-631170-04021511	3
5	Diffuser	7821-K320WD-01802021	1
4	Film	7821-K320WD-01882021	1
3	Surface frame	7021-32L81F-11480001	1
2	Glassboard	Customer provide	1
1	Surface frame(Iron frame)	7001-32L82F-01700001	1

Detail for module

X.± .200	X.*± 0.050
.X± .100	.X*± 0.010
.XX± .01	.XX*± 0.005
.XXX± .005	.XXX*± 0.002

THESE DRAWINGS AND SPECIFIGATIONS ARE THE PROPERTY OF KANGTE COMPUTER CO. LTD. AND SHALL NOT BE REPRODUCED. COPIED OR USED IN ANY MANNER WITHOUT THE PRIOR WRITTEN CONSENT OF KANGTE COMPUTER CO. LTD

32L82F(BCAS-32) Explosive View

KTC®

SHENZHEN KTC TECHNOLOGY CO.,Ltd

2016-07-13

Q'TY	UNIT	SCALE	SHEET	REV.
	MM	1:1	1/1	A