PHILIPS

40” DirecTV Monitor

Service Manual

40HFL5783X/F7 (Serial No.: VM1)

© 2012 Funai Electric Co., Ltd.

All rights reserved. No part of this manual may be reproduced, copied, transmitted, disseminated, transcribed, downloaded or stored in any storage medium, in any form or for any purpose without the express prior written consent of Funai. Furthermore, any unauthorized commercial distribution of this manual or any revision hereto is strictly prohibited.

Information in this document is subject to change without notice. Funai reserves the right to change the content herein without the obligation to notify any person or organization of such changes.

FUNAI with the design is a registered trademark of Funai Electric Co., Ltd and may not be used in any way without the express written consent of Funai. All other trademarks used herein remain the exclusive property of their respective owners. Nothing contained in this manual should be construed as granting, by implication or otherwise, any license or right to use any of the trademarks displayed herein. Misuse of any trademarks or any other content in this manual is strictly prohibited. Funai shall aggressively enforce its intellectual property rights to the fullest extent of the law.

120627

IMPORTANT SAFETY NOTICE

Proper service and repair is important to the safe, reliable operation of all P&F Equipment. The service procedures recommended by P&F and described in this service manual are effective methods of performing service operations. Some of these service special tools should be used when and as recommended.

It is important to note that this service manual contains various CAUTIONS and NOTICES which should be carefully read in order to minimize the risk of personal injury to service personnel. The possibility exists that improper service methods may damage the equipment. It also is important to understand that these CAUTIONS and NOTICES ARE NOT EXHAUSTIVE. P&F could not possibly know, evaluate and advice the service trade of all conceivable ways in which service might be done or of the possible hazardous consequences of each way. Consequently, P&F has not undertaken any such broad evaluation. Accordingly, a servicer who uses a service procedure or tool which is not recommended by P&F must first use all precautions thoroughly so that neither his safety nor the safe operation of the equipment will be jeopardized by the service method selected.

The LCD panel is manufactured to provide many years of useful life. Occasionally a few non active pixels may appear as a tiny spec of color. This is not to be considered a defect in the LCD screen.

TABLE OF CONTENTS

Specifications 1-1
Important Safety Precautions 2-1
Standard Notes for Servicing 3-1
Cabinet Disassembly Instructions 4-1
Electrical Adjustment Instructions 5-1
How to Initialize the DirecTV Monitor 6-1
Firmware Renewal Mode 7-1
Hospitality TV Mode 8-1
Troubleshooting 9-1
Block Diagrams 10-1
Schematic Diagrams / CBA and Test Points 11-1
Wiring Diagram 12-1
Exploded Views 13-1
Parts List 14-1

SPECIFICATIONS

< LCD PANEL >

Description	Condition	Unit	Nominal	Limit
1. Native Pixel Resolution	Horizontal Vertical	pixels pixels	1920 1080	--- ---
2. Brightness (w / filter)	---	cd/m^2	310	---
3. Viewing Angle	Horizontal Vertical	° °	-88 to 88 -88 to 88	-70 to 70 -70 to 70

< VIDEO >

Description	Condition	Unit	Nominal	Limit
1. Over Scan	Horizontal Vertical	% %	5 5	5±5 5±5
2. Color Temperature	--- x y	°K	12000 0.272 0.278	--- ±3% ±3%
	<Measurement condition> Input signal: Internal pattern (40/70% raster) Measurement point: Screen center Measuring instrument: Made of KONICA MINOLTA Luminance meter CA-310 Aging time: 60min. (Retail MODE / 100IRE Raster HDMI 1080i@60) MODE setting of TV: Shipment setting / Retail MODE Ambient temperature: 25°C ± 5°C			
3. Resolution (composite video)	Horizontal Vertical	line line	400 350	--- ---

< AUDIO >

All items are measured across 8 Ω load at speaker output terminal with L.P.F.

Description	Condition	Unit	Nominal	Limit
1. Audio Output 10% Distortion (HDMI 0 dBfs)	Lch/Rch	W	10.0/10.0	8.0/8.0
2. Audio Distortion (HDMI)	500mW: Lch/Rch	%	0.5/0.5	2.0/2.0
3. Audio Freq. Response (HDMI)	−6dB: Lch −6dB: Rch	Hz Hz	70 to 10 k 70 to 10 k	100 to 8 k 100 to 8 k

IMPORTANT SAFETY PRECAUTIONS

Prior to shipment from the factory, our products are strictly inspected for recognized product safety and electrical codes of the countries in which they are to be sold. However, in order to maintain such compliance, it is equally important to implement the following precautions when a set is being serviced.

Safety Precautions for DirecTV Monitor Circuit

1. **Before returning an instrument to the customer,** always make a safety check of the entire instrument, including, but not limited to, the following items:
   - **a.** Be sure that no built-in protective devices are defective and have been defeated during servicing. (1) Protective shields are provided on this chassis to protect both the technician and the customer. Correctly replace all missing protective shields, including any removed for servicing convenience. (2) When reinstalling the chassis and/or other assembly in the cabinet, be sure to put back in place all protective devices, including but not limited to, nonmetallic control knobs, insulating fishpapers, adjustment and compartment covers/shields, and isolation resistor/capacitor networks. **Do not operate this instrument or permit it to be operated without all protective devices correctly installed and functioning. Servicers who defeat safety features or fail to perform safety checks may be liable for any resulting damage.**
   - **b.** Be sure that there are no cabinet openings through which an adult or child might be able to insert their fingers and contact a hazardous voltage. Such openings include, but are not limited to, (1) spacing between the Liquid Crystal Panel and the cabinet mask, (2) excessively wide cabinet ventilation slots, and (3) an improperly fitted and/or incorrectly secured cabinet back cover.
   - **c. Antenna Cold Check -** With the instrument AC plug removed from any AC source, connect an electrical jumper across the two AC plug prongs. Place the instrument AC switch in the on position. Connect one lead of an ohmmeter to the AC plug prongs tied together and touch the other ohmmeter lead in turn to each tuner antenna input exposed terminal screw and, if applicable, to the coaxial connector. If the measured resistance is less than 1.0 megohm or greater than 5.2 megohm, an abnormality exists that must be corrected before the instrument is returned to the customer. Repeat this test with the instrument AC switch in the off position.
   - **d. Leakage Current Hot Check -** With the instrument completely reassembled, plug the AC line cord directly into a 120 V AC outlet. (Do not use an isolation transformer during this test.) Use a leakage current tester or a metering system that complies with American National Standards Institute (ANSI) C101.1 Leakage Current for Appliances and Underwriters Laboratories (UL) 1410, (50.7). With the instrument AC switch first in the on position and then in the off position, measure from a known earth ground (metal water pipe, conduit, etc.) to all exposed metal parts of the instrument (antennas, handle brackets, metal cabinet, screw heads, metallic overlays, control shafts, etc.), especially any exposed metal parts that offer an electrical return path to the chassis. Any current measured must not exceed 3.5 milli-ampere. Reverse the instrument power cord plug in the outlet and repeat the test.

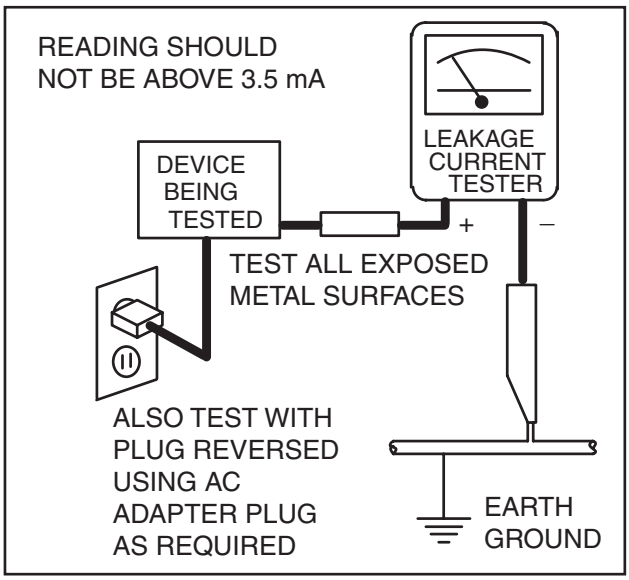

ANY MEASUREMENTS NOT WITHIN THE LIMITS SPECIFIED HEREIN INDICATE A POTENTIAL SHOCK HAZARD THAT MUST BE ELIMINATED BEFORE RETURNING THE INSTRUMENT TO THE CUSTOMER OR BEFORE CONNECTING THE ANTENNA OR ACCESSORIES.

2. Read and comply with all caution and safety-related notes on or inside the receiver cabinet, on the receiver chassis, or on the Liquid Crystal Panel.

3. **Design Alteration Warning -** Do not alter or add to the mechanical or electrical design of this TV receiver. Design alterations and additions, including, but not limited to circuit modifications and the addition of items such as auxiliary audio and/or video output connections, might alter the safety characteristics of this receiver and create a hazard to the user. Any design alterations or additions will void the manufacturer's warranty and may make you, the servicer, responsible for personal injury or property damage resulting therefrom.
4. **Hot Chassis Warning -**
   a. Some TV receiver chassis are electrically connected directly to one conductor of the AC power cord and maybe safety-serviced without an isolation transformer only if the AC power plug is inserted so that the chassis is connected to the ground side of the AC power source. To confirm that the AC power plug is inserted correctly, with an AC voltmeter, measure between the chassis and a known earth ground. If a voltage reading in excess of 1.0 V is obtained, remove and reinsert the AC power plug in the opposite polarity and again measure the voltage potential between the chassis and a known earth ground.
   b. Some TV receiver chassis normally have 85V AC(RMS) between chassis and earth ground regardless of the AC plug polarity. This chassis can be safety-serviced only with an isolation transformer inserted in the power line between the receiver and the AC power source, for both personnel and test equipment protection.
   c. Some TV receiver chassis have a secondary ground system in addition to the main chassis ground. This secondary ground system is not isolated from the AC power line. The two ground systems are electrically separated by insulation material that must not be defeated or altered.
5. Observe original lead dress. Take extra care to assure correct lead dress in the following areas: a. near sharp edges, b. near thermally hot parts-be sure that leads and components do not touch thermally hot parts, c. the AC supply, d. high voltage, and, e. antenna wiring. Always inspect in all areas for pinched, out of place, or frayed wiring. Check AC power cord for damage.
6. Components, parts, and/or wiring that appear to have overheated or are otherwise damaged should be replaced with components, parts, or wiring that meet original specifications. Additionally, determine the cause of overheating and/or damage and, if necessary, take corrective action to remove any potential safety hazard.
7. **Product Safety Notice -** Some electrical and mechanical parts have special safety-related characteristics which are often not evident from visual inspection, nor can the protection they give necessarily be obtained by replacing them with components rated for higher voltage, wattage, etc. Parts that have special safety characteristics are identified by a ⚠ on schematics and in parts lists. Use of a substitute replacement that does not have the same safety characteristics as the recommended replacement part might create shock, fire, and/or other hazards. The product's safety is under review continuously and new instructions are issued whenever appropriate. Prior to shipment from the factory, our products are strictly inspected to confirm they comply with the recognized product safety and electrical codes of the countries in which they are to be sold. However, in order to maintain such compliance, it is equally important to implement the following precautions when a set is being serviced.

Precautions during Servicing

A. Parts identified by the ⚠ symbol are critical for safety.
Replace only with part number specified.

B. In addition to safety, other parts and assemblies are specified for conformance with regulations applying to spurious radiation. These must also be replaced only with specified replacements.
Examples: RF converters, RF cables, noise blocking capacitors, and noise blocking filters, etc.

C. Use specified internal wiring. Note especially:

1) Wires covered with PVC tubing
2) Double insulated wires
3) High voltage leads

D. Use specified insulating materials for hazardous live parts. Note especially:

1) Insulation Tape
2) PVC tubing
3) Spacers
4) Insulators for transistors.

E. When replacing AC primary side components (transformers, power cord, etc.), wrap ends of wires securely about the terminals before soldering.

F. Observe that the wires do not contact heat producing parts (heat sinks, oxide metal film resistors, fusible resistors, etc.)

G. Check that replaced wires do not contact sharp edged or pointed parts.

H. When a power cord has been replaced, check that 11~13 lb (5~6 kg) of force in any direction will not loosen it.

I. Also check areas surrounding repaired locations.

J. Use care that foreign objects (screws, solder droplets, etc.) do not remain inside the set.

K. When connecting or disconnecting the internal connectors, first, disconnect the AC plug from the AC supply outlet.

L. When installing parts or assembling the cabinet parts, be sure to use the proper screws and tighten certainly.

Safety Check after Servicing

Examine the area surrounding the repaired location for damage or deterioration. Observe that screws, parts and wires have been returned to original positions. Afterwards, perform the following tests and confirm the specified values in order to verify compliance with safety standards.

1. Clearance Distance

When replacing primary circuit components, confirm specified clearance distance (d) and (d') between soldered terminals, and between terminals and surrounding metallic parts. (See Fig. 1)

Table 1: Ratings for selected area

AC Line Voltage	Region	Clearance Distance (d), (d')
110 to 130 V	U.S.A. or Canada	≥ 3.2 mm (0.126 inches)

Note: This table is unofficial and for reference only. Be sure to confirm the precise values.

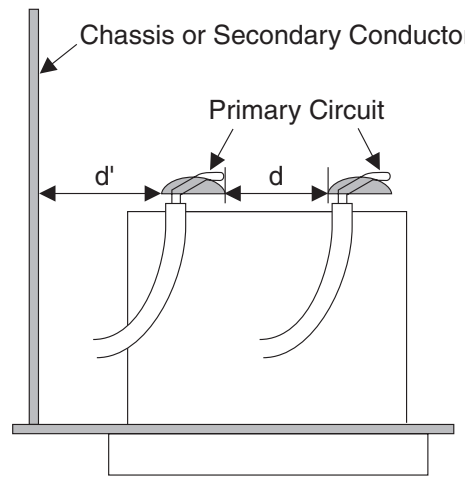

Fig. 1

2. Leakage Current Test

Confirm the specified (or lower) leakage current between B (earth ground, power cord plug prongs) and externally exposed accessible parts (RF terminals, antenna terminals, video and audio input and output terminals, microphone jacks, earphone jacks, etc.) is lower than or equal to the specified value in the table below.

Measuring Method: (Power ON)

Insert load Z between B (earth ground, power cord plug prongs) and exposed accessible parts. Use an AC voltmeter to measure across both terminals of load Z. See Fig. 2 and following table.

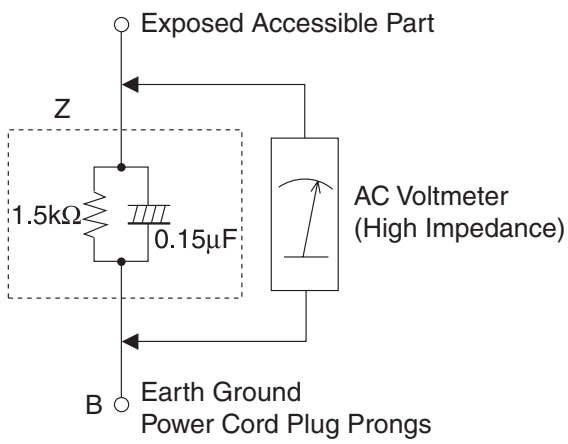

Fig. 2

Table 2: Leakage current ratings for selected areas

AC Line Voltage	Region	Load Z	Leakage Current (i)	Earth Ground (B) to:
110 to 130 V	U.S.A. or Canada	0.15 μF CAP. & 1.5 kΩ RES. Connected in parallel	i ≤ 0.5 mA rms	Exposed accessible parts

Note: This table is unofficial and for reference only. Be sure to confirm the precise values.

STANDARD NOTES FOR SERVICING

Circuit Board Indications

1. The output pin of the 3 pin Regulator ICs is indicated as shown.

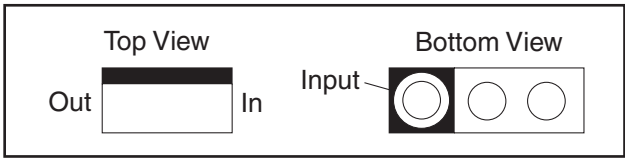

2. For other ICs, pin 1 and every fifth pin are indicated as shown.

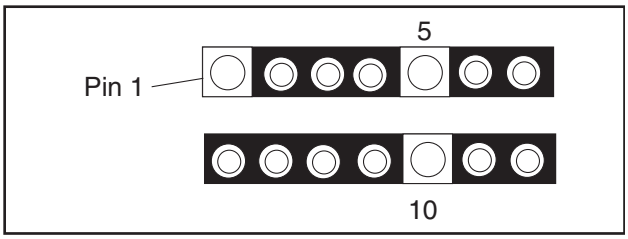

3. The 1st pin of every male connector is indicated as shown.

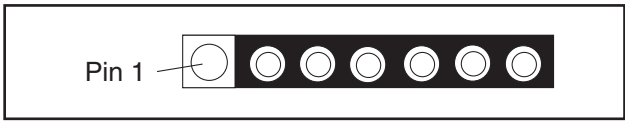

Pb (Lead) Free Solder

Pb free mark will be found on PCBs which use Pb free solder. (Refer to figure.) For PCBs with Pb free mark, be sure to use Pb free solder. For PCBs without Pb free mark, use standard solder.

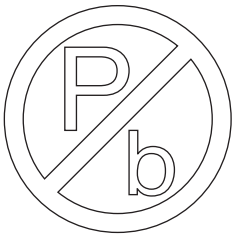

Pb free mark

How to Remove / Install Flat Pack-IC

1. Removal

With Hot-Air Flat Pack-IC Desoldering Machine:

1. Prepare the hot-air flat pack-IC desoldering machine, then apply hot air to the Flat Pack-IC (about 5 to 6 seconds). (Fig. S-1-1)

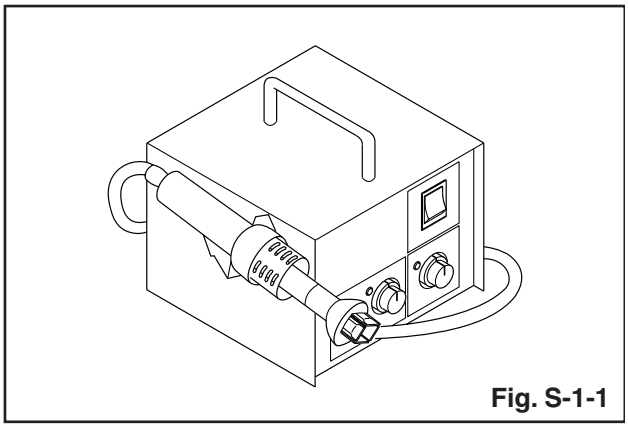

Fig. S-1-1

2. Remove the flat pack-IC with tweezers while applying the hot air.
3. Bottom of the flat pack-IC is fixed with glue to the CBA; when removing entire flat pack-IC, first apply soldering iron to center of the flat pack-IC and heat up. Then remove (glue will be melted). (Fig. S-1-6)
4. Release the flat pack-IC from the CBA using tweezers. (Fig. S-1-6)

CAUTION:

1. The Flat Pack-IC shape may differ by models. Use an appropriate hot-air flat pack-IC desoldering machine, whose shape matches that of the Flat Pack-IC.
2. Do not supply hot air to the chip parts around the flat pack-IC for over 6 seconds because damage to the chip parts may occur. Put masking tape around the flat pack-IC to protect other parts from damage. (Fig. S-1-2)

3. The flat pack-IC on the CBA is affixed with glue, so be careful not to break or damage the foil of each pin or the solder lands under the IC when removing it.

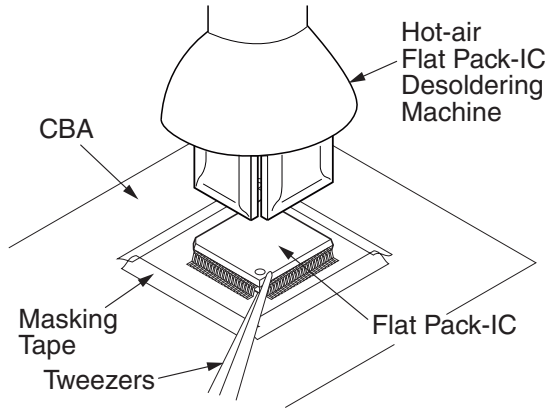

Fig. S-1-2

With Soldering Iron:

1. Using desoldering braid, remove the solder from all pins of the flat pack-IC. When you use solder flux which is applied to all pins of the flat pack-IC, you can remove it easily. (Fig. S-1-3)

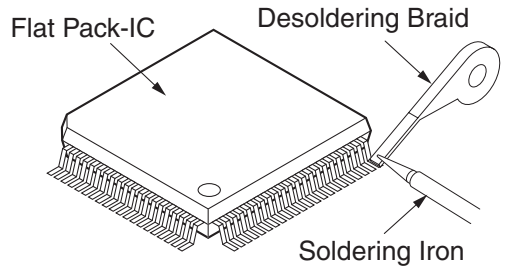

Fig. S-1-3

2. Lift each lead of the flat pack-IC upward one by one, using a sharp pin or wire to which solder will not adhere (iron wire). When heating the pins, use a fine tip soldering iron or a hot air desoldering machine. (Fig. S-1-4)

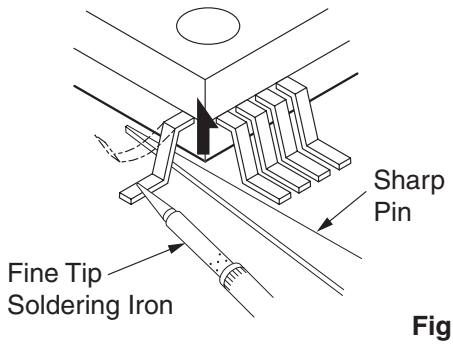

Fig. S-1-4

3. Bottom of the flat pack-IC is fixed with glue to the CBA; when removing entire flat pack-IC, first apply soldering iron to center of the flat pack-IC and heat up. Then remove (glue will be melted). (Fig. S-1-6)
4. Release the flat pack-IC from the CBA using tweezers. (Fig. S-1-6)

With Iron Wire:

1. Using desoldering braid, remove the solder from all pins of the flat pack-IC. When you use solder flux which is applied to all pins of the flat pack-IC, you can remove it easily. (Fig. S-1-3)
2. Affix the wire to a workbench or solid mounting point, as shown in Fig. S-1-5.
3. While heating the pins using a fine tip soldering iron or hot air blower, pull up the wire as the solder melts so as to lift the IC leads from the CBA contact pads as shown in Fig. S-1-5.
4. Bottom of the flat pack-IC is fixed with glue to the CBA; when removing entire flat pack-IC, first apply soldering iron to center of the flat pack-IC and heat up. Then remove (glue will be melted). (Fig. S-1-6)
5. Release the flat pack-IC from the CBA using tweezers. (Fig. S-1-6)

Note: When using a soldering iron, care must be taken to ensure that the flat pack-IC is not being held by glue. When the flat pack-IC is removed from the CBA, handle it gently because it may be damaged if force is applied.

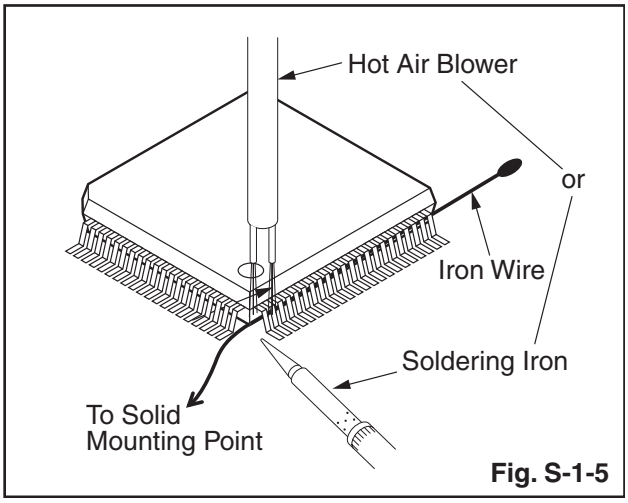

Fig. S-1-5

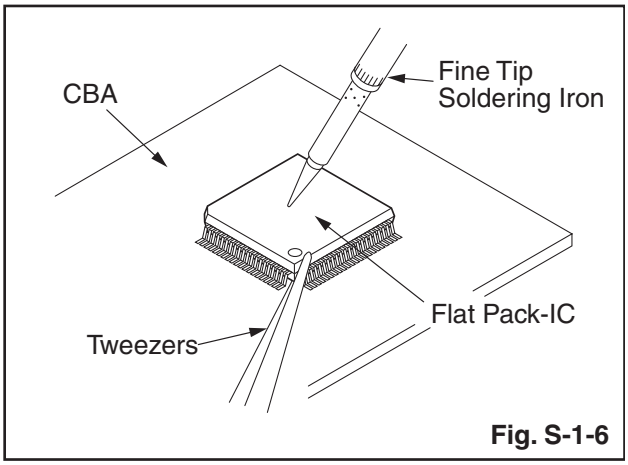

Fig. S-1-6

2. Installation

1. Using desoldering braid, remove the solder from the foil of each pin of the flat pack-IC on the CBA so you can install a replacement flat pack-IC more easily.
2. The "●" mark on the flat pack-IC indicates pin 1. (See Fig. S-1-7.) Be sure this mark matches the pin 1 on the PCB when positioning for installation. Then presolder the four corners of the flat pack-IC. (See Fig. S-1-8.)
3. Solder all pins of the flat pack-IC. Be sure that none of the pins have solder bridges.

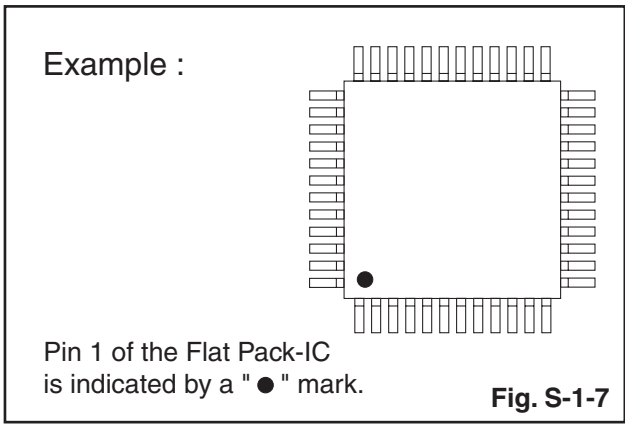

Fig. S-1-7

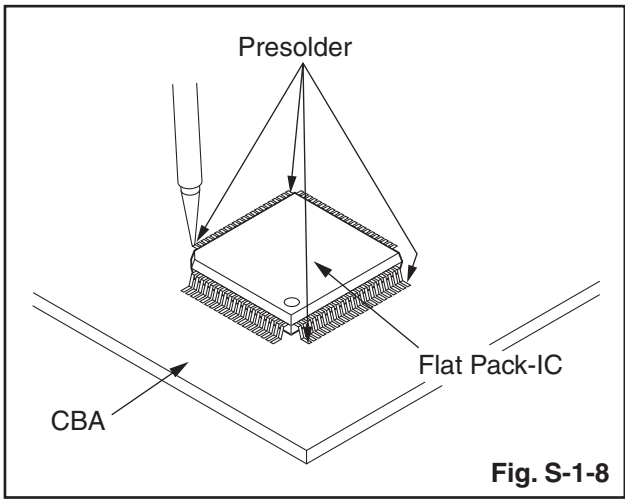

Fig. S-1-8

Instructions for Handling Semi-conductors

Electrostatic breakdown of the semi-conductors may occur due to a potential difference caused by electrostatic charge during unpacking or repair work.

1. Ground for Human Body

Be sure to wear a grounding band (1 MΩ) that is properly grounded to remove any static electricity that may be charged on the body.

2. Ground for Workbench

Be sure to place a conductive sheet or copper plate with proper grounding (1 MΩ) on the workbench or other surface, where the semi-conductors are to be placed. Because the static electricity charge on clothing will not escape through the body grounding band, be careful to avoid contacting semi-conductors with your clothing.

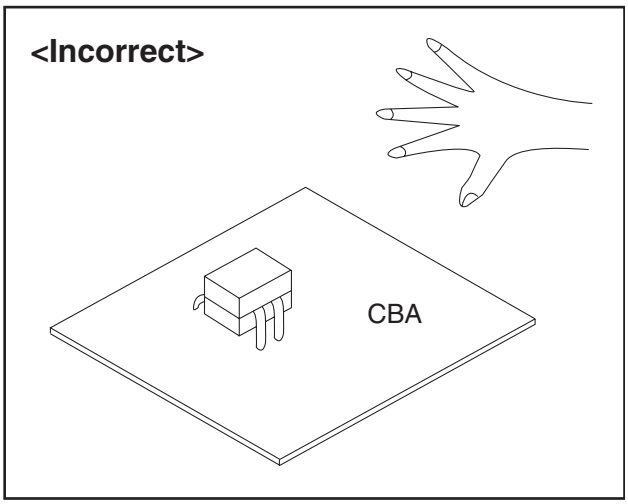

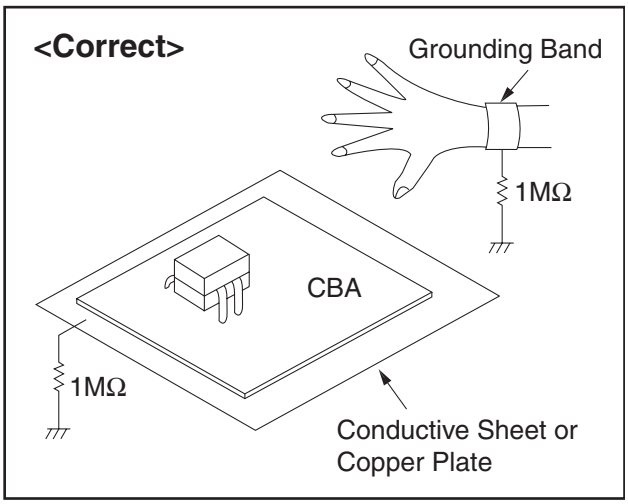

CABINET DISASSEMBLY INSTRUCTIONS

1. Disassembly Flowchart

This flowchart indicates the disassembly steps for the cabinet parts and the CBA in order to gain access to items to be serviced. When reassembling, follow the steps in reverse order. Bend, route and dress the cables as they were.

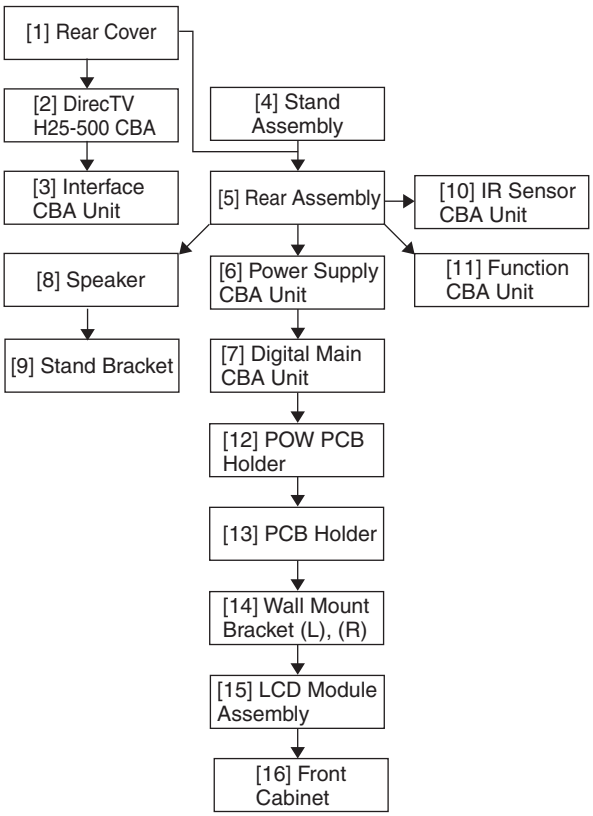

2. Disassembly Method

Step/ Loc. No.	Part	Fig. No.	Removal	Note
[1]	Rear Cover	D1	5(S-1), Nut, Washer	---
[2]	DirecTV H25-500 CBA	D1 D5	3(S-2), Shield Box, CN2004, CN2005, CN2006, JK2007	
[3]	Interface CBA Unit	D1 D5	4(S-3), Interface PCB Holder, CN2001, CN2002	
[4]	Stand Assembly	D1	4(S-4)	---
[5]	Rear Assembly	D1	14(S-5), 4(S-6), 8(L-1)	---
[6]	Power Supply CBA Unit	D2 D5	8(S-7), CN1, CN2, CN3	---
[7]	Digital Main CBA Unit	D2 D5	5(S-8), CN3001, CN3803, CN3902	---
[8]	Speaker	D3	----------	---
[9]	Stand Bracket	D3	2(S-9), 5(S-10), (S-11), CL601, AC Inlet Holder	---
[10]	IR Sensor CBA Unit	D3 D5	CN4051, Shield Plate	---
[11]	Function CBA Unit	D3 D5	Function Button, Knob Frame	---
[12]	POW PCB Holder	D4	6(S-12)	---
[13]	PCB Holder	D4	(S-13), 3(S-14)	---
[14]	Wall Mount Bracket (L), (R)	D4	4(S-15)	---
[15]	LCD Module Assembly	D4	(S-16)	---
[16]	Front Cabinet	D4	----------	---
↓ (1)	↓ (2)	↓ (3)	↓ (4)	↓ (5)

Note:

(1) Order of steps in procedure. When reassembling, follow the steps in reverse order. These numbers are also used as the Identification (location) No. of parts in figures.

(2) Parts to be removed or installed.

(3) Fig. No. showing procedure of part location

(4) Identification of parts to be removed, unhooked, unlocked, released, unplugged, unclamped, or desoldered.
P = Spring, L = Locking Tab, S = Screw,
H = Hex Screw, CN = Connector
e.g. 2(S-2) = two Screws of (S-2),
2(L-2) = two Locking Tabs of (L-2)

(5) Refer to the following "Reference Notes in the Table."

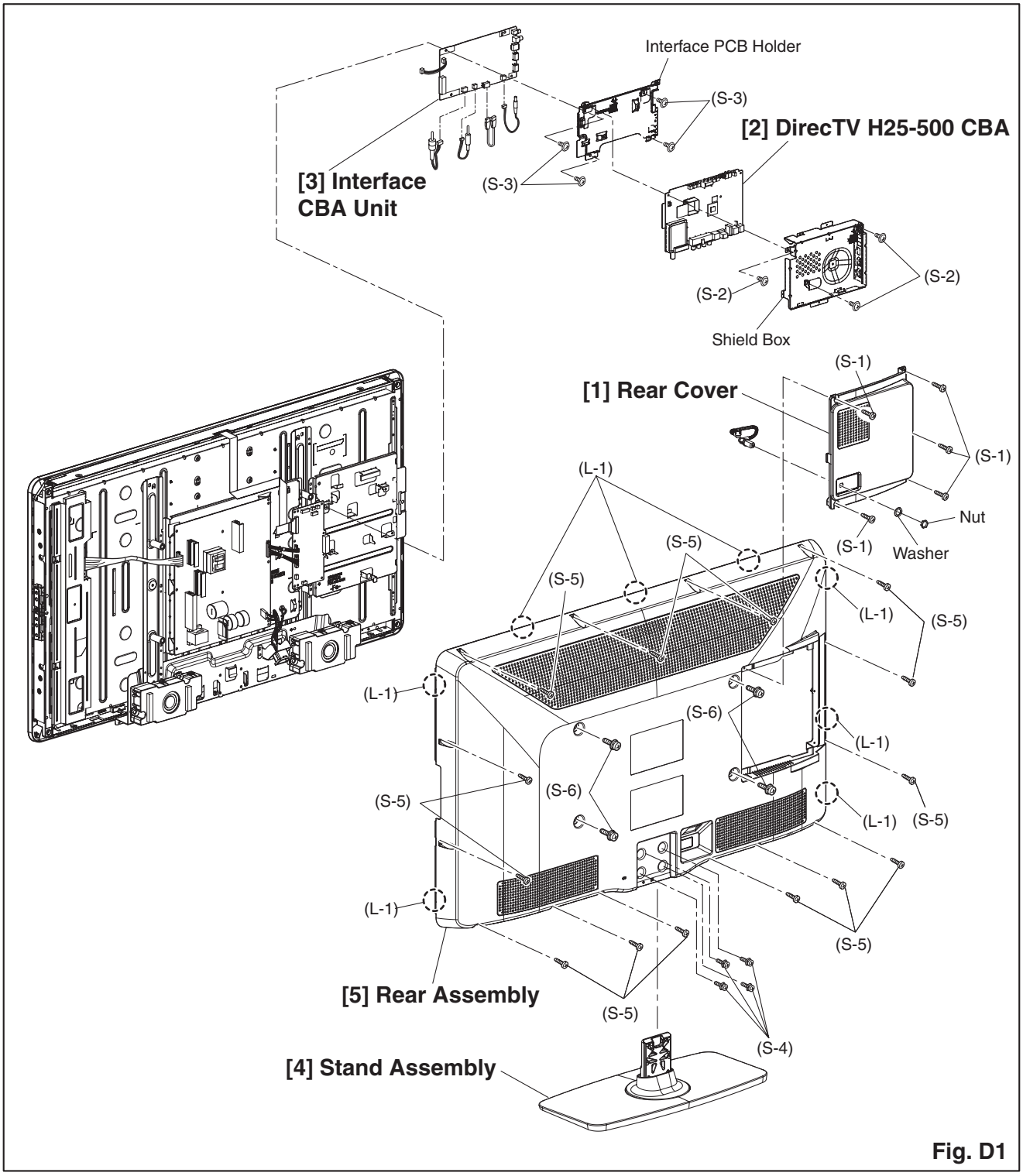
Interface PCB Holder
(S-3)
[2] DirecTV H25-500 CBA
[3] Interface
CBA Unit
(S-3)
(S-2)
(S-2)
Shield Box
(S-1)
[1] Rear Cover
(S-1)
(L-1)
Nut
(S-1)
Washer
(S-5)
(S-5)
(L-1)
(S-5)
(L-1)
(S-6)
(L-1)
(S-5)
(S-6)
(L-1)
(S-5)
(L-1)
(S-5)
[5] Rear Assembly
(S-5)
(S-4)
[4] Stand Assembly

Fig. D1

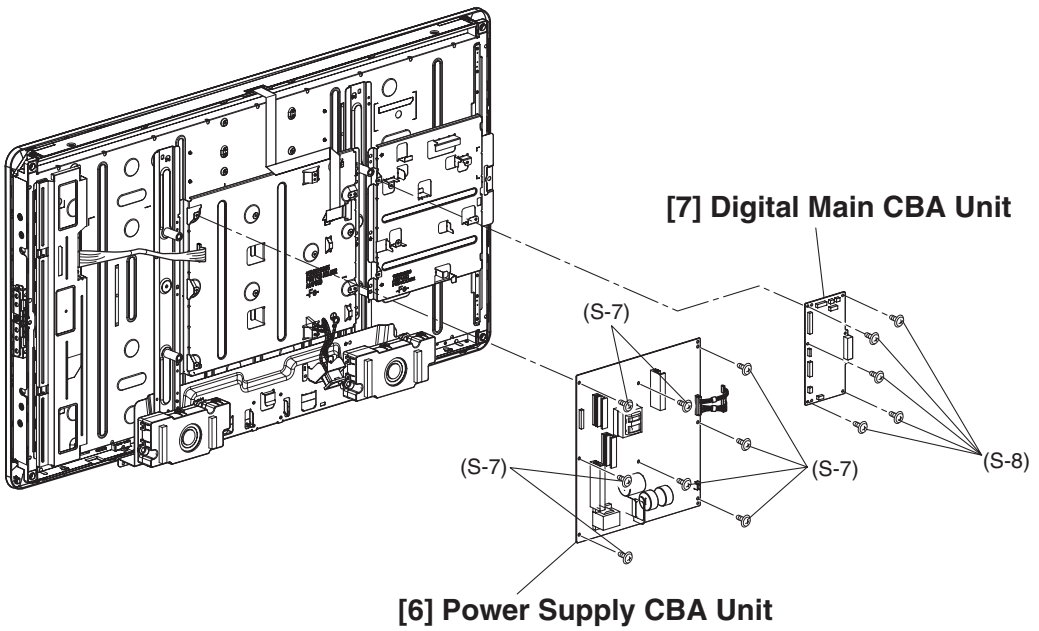
[7] Digital Main CBA Unit
(S-7)
(S-7)
(S-7)
(S-8)
[6] Power Supply CBA Unit

Fig. D2

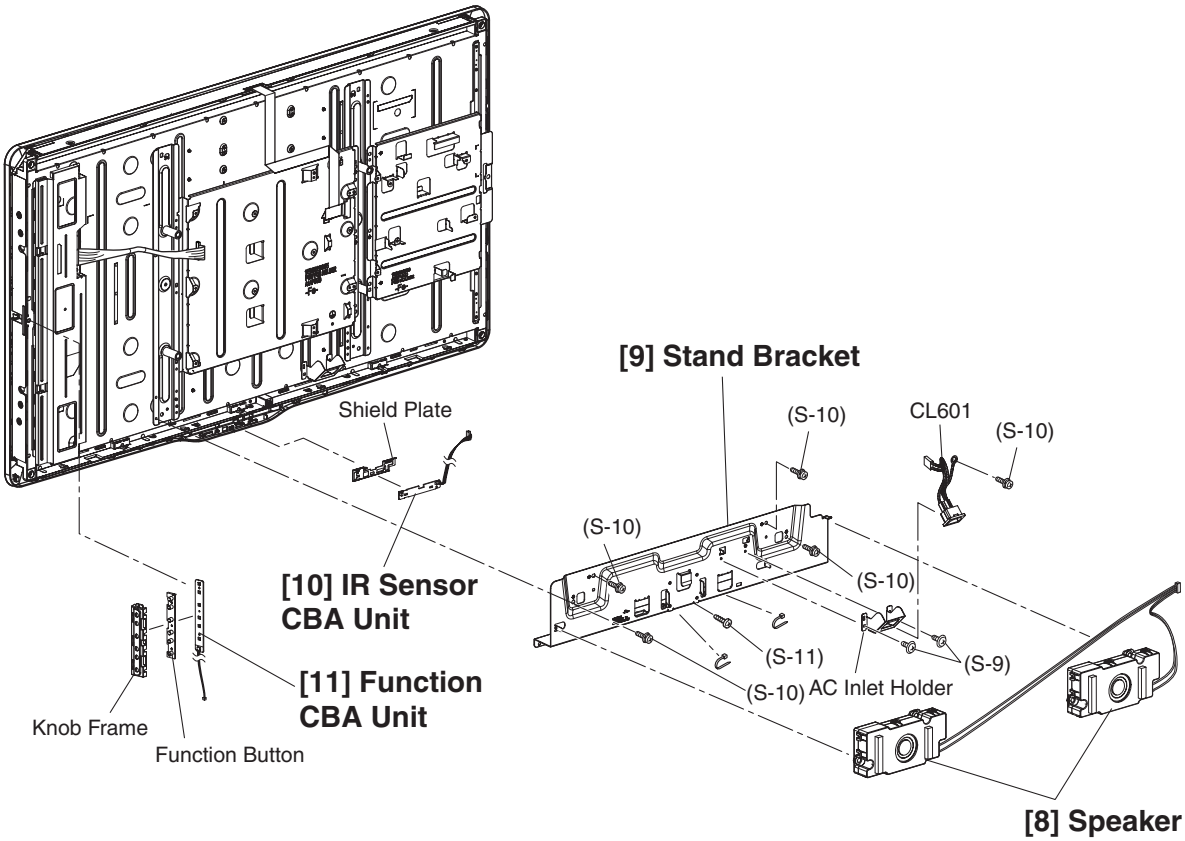
[9] Stand Bracket
Shield Plate
(S-10)
CL601
(S-10)
(S-10)
(S-10)
[10] IR Sensor
CBA Unit
(S-11)
(S-9)
(S-10)
AC Inlet Holder
[11] Function
CBA Unit
Knob Frame
Function Button
[8] Speaker

Fig. D3

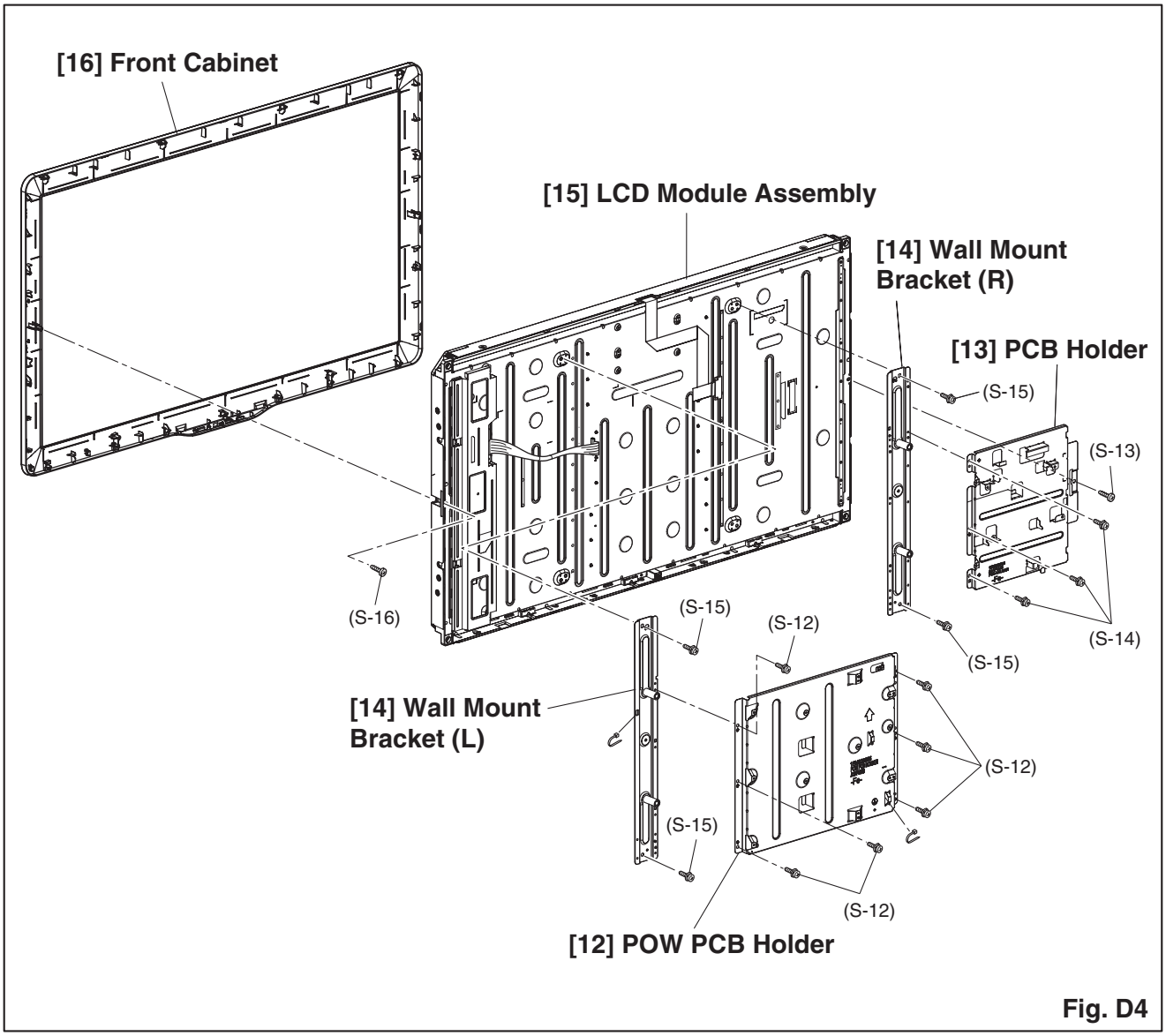
[16] Front Cabinet
[15] LCD Module Assembly
[14] Wall Mount Bracket (R)
[13] PCB Holder
(S-15)
(S-13)
(S-14)
(S-16)
(S-15)
(S-12)
(S-15)
[14] Wall Mount Bracket (L)
(S-12)
(S-15)
(S-12)
[12] POW PCB Holder

Fig. D4

Cable Wiring Diagram

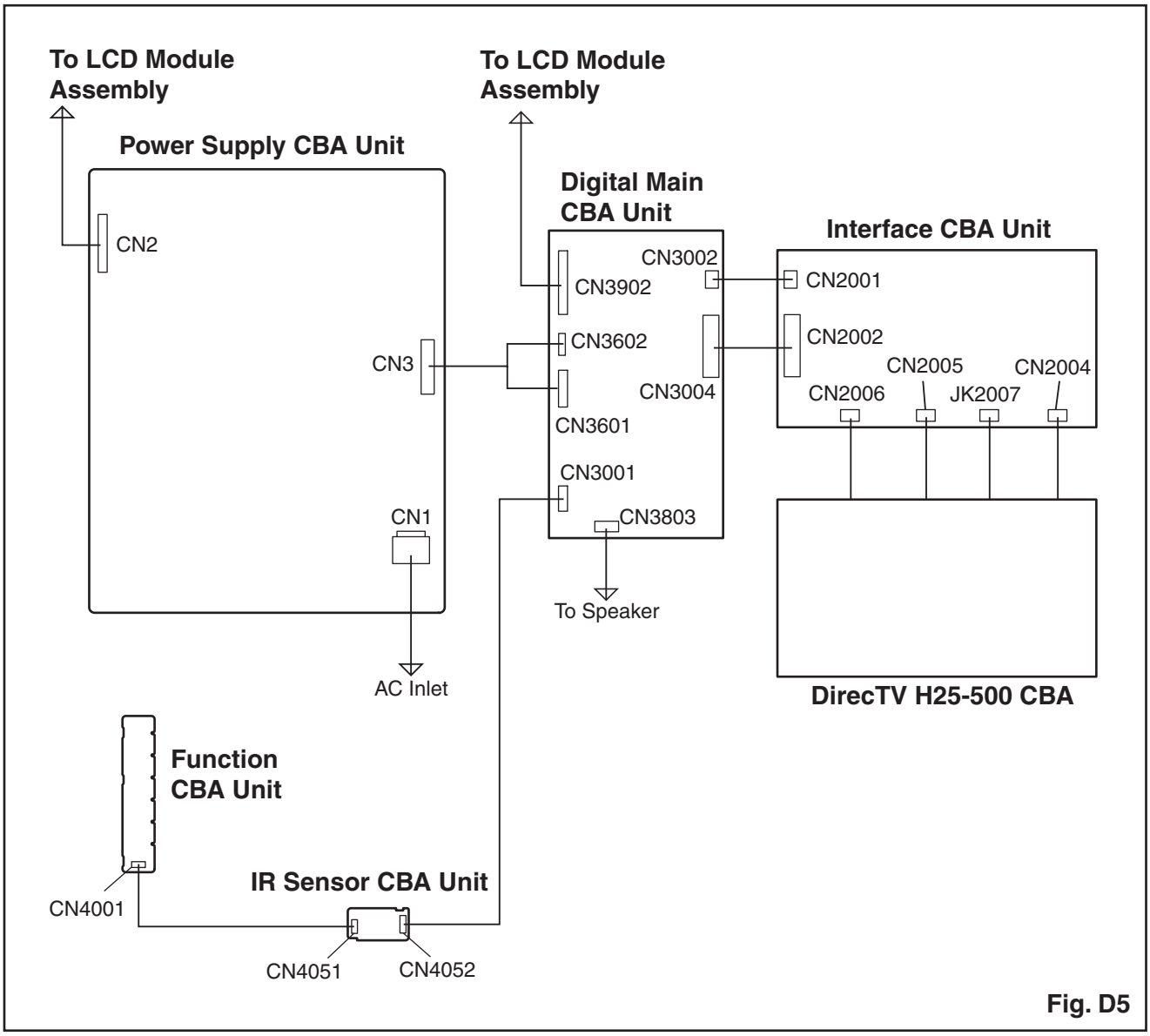

Fig. D5

ELECTRICAL ADJUSTMENT INSTRUCTIONS

General Note: “CBA” is abbreviation for “Circuit Board Assembly.”

Note: Electrical adjustments are required after replacing circuit components and certain mechanical parts. It is important to perform these adjustments only after all repairs and replacements have been completed.
Also, do not attempt these adjustments unless the proper equipment is available.

Test Equipment Required

1. Remote control unit
2. Color Analyzer,
   CA-310 (KONICA MINOLTA Luminance meter) or measuring instrument as good as CA-310.

How to set up the service mode

How to set up the service mode with Guest Remote Control

1. Turn the power on.
2. Press [3], [1], [9], [7], [5], [3] and [MUTE] buttons on the remote control unit in this order to display the menu.
3. Select “Consumer TV setup” and press the [OK] button to display Setup menu.
4. Select “Features”.
5. Select “Current Software Info”.
6. Press [0], [6], [2], [5], [9], [6] and [INFO] buttons on the remote control unit in this order. The following screen appears.

"*" differs depending on the models.

```
Code:              *******_**_**_****_**
Pic code:          **********_***_*_**
Panel-Option code: **_***_***_***_***
MIPS:              Push 0 key

                 Press "POWER" key to exit.

Tuner:       ****_*****_****
Safety:      Safety_Non        Total Watch Time:  *****
HDMI EDID:   **                Lightsensor:       ****
```

How to set up the service mode with Set Up Remote Control (optional)

1. Turn the power on.
2. Press the [RC5 SETUP] and [HOME/MENU] button on the set up remote control in this order to display the menu.
3. Select “Consumer TV setup” and press the [OK] button to display Setup menu.
4. Select “Features”.
5. Select “Current Software Info”.
6. Press the [RC5 GUEST], [0], [6], [2], [5], [9], [6] and [RECALL/INFO] buttons on the set up remote control in this order. The following screen appears.

"*" differs depending on the models.

```
Code:              *******_**_**_****_**
Pic code:          **********_***_*_**
Panel-Option code: **_***_***_***_***
MIPS:              Push 0 key

                 Press "POWER" key to exit.

Tuner:       ****_*****_****
Safety:      Safety_Non        Total Watch Time:  *****
HDMI EDID:   **                Lightsensor:       ****
```

1. Purity Check Mode

This mode cycles through full-screen displays of red, green, blue, and white to check for non-active pixels.

1. Enter the service mode.
2. Each time the [7] button on the remote control unit is pressed, the display changes as follows.

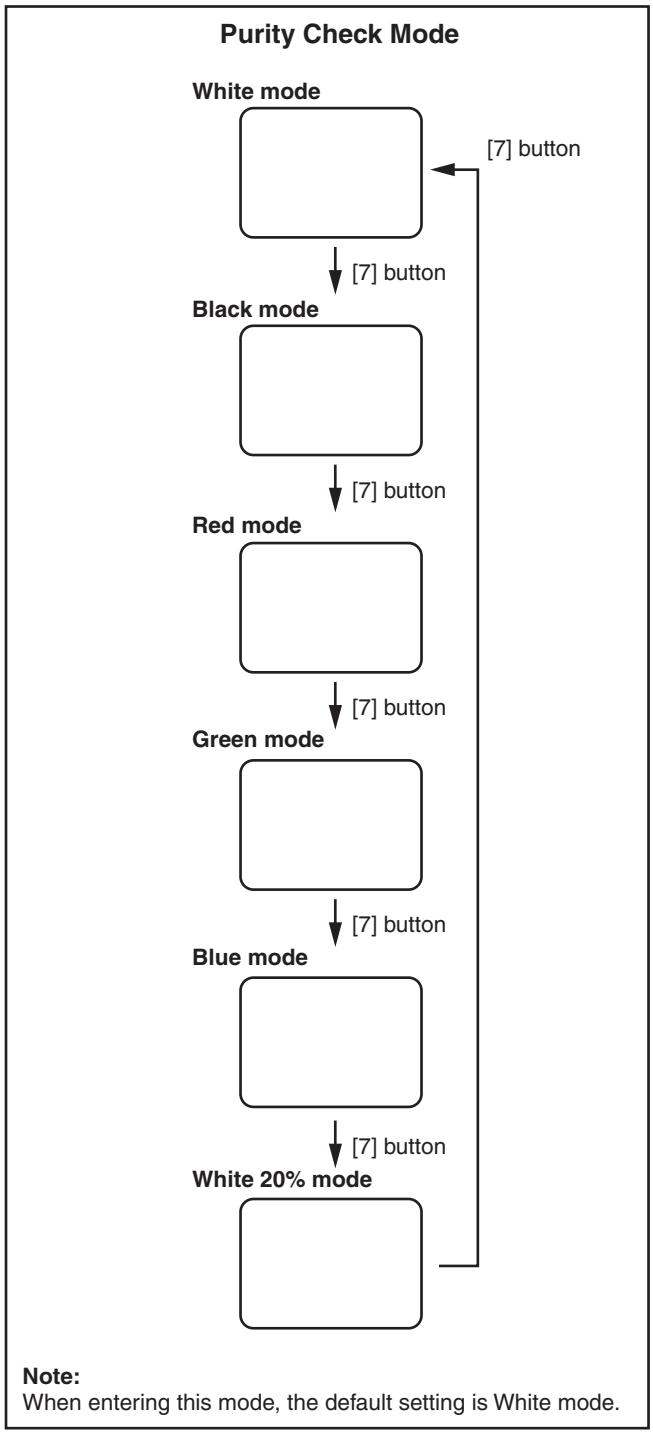

3. To cancel or to exit from the Purity Check Mode, press [BACK] button.

The White Balance Adjustment should be performed when replacing the LCD Panel or Digital Main CBA.

2. White Balance Adjustment

Purpose: To mix red and blue beams correctly for pure white.

Symptom of Misadjustment: White becomes bluish or reddish.

ITEM	SPECIFICATION
Color temperature	x= 0.272 ± 0.002 y= 0.278 ± 0.002
Input Signal	Internal pattern (40/70% raster)
Measurement point	Screen center
M. EQ.	CA-310 (KONICA MINOLTA Luminance meter) or measuring instrument as good as CA-310.
Aging time	60min. (Retail MODE/100IRE Raster HDMI 1080i@60)
MODE setting of TV	Shipment setting/ Retail MODE
Ambient temperature	25°C ± 5°C

1. Operate the unit for more than 60 minutes.
2. Enter the service mode.
3. Press [VOL -] button three times on the remote control unit to select “Drive setting” mode. “Drive” appears in the screen.
4. Set the color analyzer at the CHROMA mode and zero point calibration. Bring the optical receptor pointing at the center of the LCD-Panel.

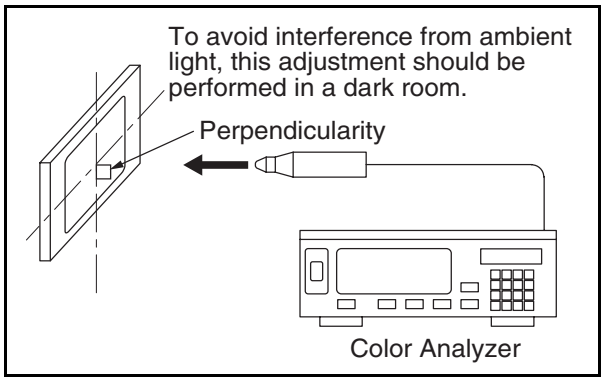

Note: The optical receptor must be set perpendicularly to the LCD Panel surface.

5. Press [3] button to select the “HDB” for High Drive Blue adjustment. (“HDB” appears in the screen.)

6. Press [MENU] button. The internal Raster signal appears in the screen. (“Internal (Single)” appears in the upper right of the screen as shown below.)

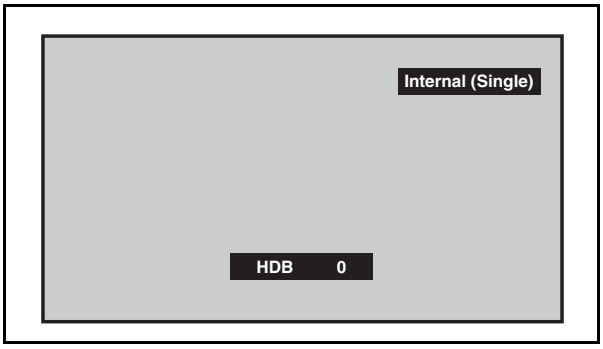

7. Press [CH + or -] buttons to adjust the color temperature becomes 12000°K (x= 0.272 / y= 0.278 ±0.002).
8. Press [1] button to select the “HDR” for High Drive Red adjustment (“HDR” appears in the screen.) and press [CH + or -] buttons to adjust the color temperature.
9. If necessary, adjust the “HDB” or “HDR” again.
10. Press [6] button to select the “LDB” for Low Drive Blue adjustment (“LDB” appears in the screen.) and press [CH + or -] buttons to adjust the color temperature.

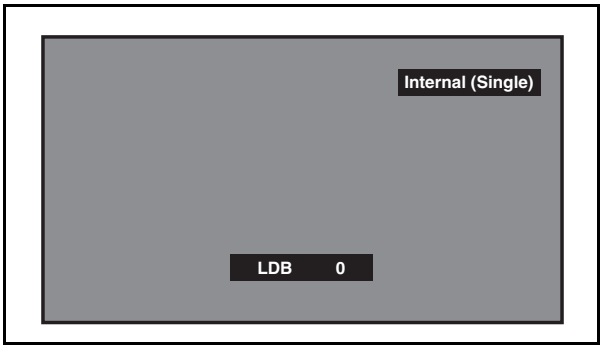

11. Press [4] button to select the “LDR” for Low Drive Red adjustment (“LDR” appears in the screen.) and press [CH + or -] buttons to adjust the color temperature.
12. If necessary, adjust the “LDB” or “LDR” again.
13. Press [VOL -] button to shift to the “Debugging Message” mode.
    If there is no message under “[WB]” section, this adjustment completes.
    If “Drive settings are NG. Retry.” is displayed, repeat above steps from 5. to 12. Then check “Debugging Message” again. If “Drive settings are NG. Retry.” is displayed, replace the LCD Panel or Digital Main CBA.
14. To cancel or to exit from the White Balance Adjustment, press [BACK] button.

After replacing the DirecTV H25-500 CBA, the following adjustments should be performed.

1. Enter the H25 Diagnostics mode

1. Plug the AC cord into the AC outlet.
2. Turn the power on with guest remote control unit.
3. Press [3], [1], [9], [7], [5], [3] and [MUTE] buttons on the remote control unit in this order to display the menu.
4. Select “Control settings” - “Standby mode” - “Fast” and press [OK].
5. Press [MENU] to exit.
6. Press [SOURCE] button on the remote control unit repeatedly to select “DTV”.
7. Press [ON] button on the DirecTV remote control unit.
8. While “Running receiver self-check...” is displayed, press the [SELECT] button on the DirecTV remote control unit to enter the H25 Diagnostics mode. After a few seconds, the H25 Diagnostics mode menu is displayed on the screen.
9. Perform the following procedures.

Note:

The “Running receiver self-check” message will be disappeared in 10 seconds.

If it disappears before pressing [SELECT], follow the procedures 1, 2, 6 and 7 above to display the message again.

2. Access Card Test

1. Select “Advanced Test Menu” in the H25 Diagnostics mode menu.
2. Select “Internal Components Tests” - “Access Card Test” - “Run Test”.
3. Test result is displayed under the “Test Result” section as shown below.

   PASS: Access Card is correctly inserted.

   NO CARD: Access Card is not inserted.

   NOT DETECTED: Access Card is incorrectly inserted.

3. Satellite Tuner Tests

Note: The Modulator and SWM module is required for this test.

1. Select “Advanced Test Menu” in the H25 Diagnostics mode menu.
2. Select “External Interface Tests” - “Satellite Tuner Tests” - “Run Test”.
3. If there is no problem, “PASSED (100%)” is displayed under the “Test Result” section.

4. SWM Test

Note: The SWM module is required for this test.

1. Select “Advanced Test Menu” in the H25 Diagnostics mode menu.
2. Select “External Interface Tests” - “SWM Test” - “Run Test”.
3. If SWM module is already installed, “PASSED” is displayed under the “Test Result” section.

5. Audio Test

1. Select “Advanced Test Menu” in the H25 Diagnostics mode menu.
2. Select “Interactive Tests” - “Audio Test” - “Run Test”.
3. While “Beeping” is displayed under the “Test Status” section, the set makes the beeping sound.
4. After confirming the sound, select “Stop Test” to terminate this test.

How to Setup the DirecTV Remote Control

To Program:

Press MUTE + Enter and hold in both keys for 3 seconds (until the visible LED blinks twice).

Then enter the program code and if accepted, the LED will blink twice again.

Program Codes:

11454 – Discrete On/Off

a.	(discrete) ON	(Sat 80h) + RC5 0,63
b.	(discrete) OFF	(Sat 81h) + RC5 0,61
c.	Vol +	RC5 0,16
d.	Vol -	RC5 0,17
e.	Mute	RC5 0,13
f.	Input	RC5 0,56

10054 – Power Toggle

a.	ON	(Sat 80h) + RC5 0,12
b.	OFF	(Sat 81h) + RC5 0,12
c.	Vol +	RC5 0,16
d.	Vol -	RC5 0,17
e.	Mute	RC5 0,13
f.	Input	RC5 0,56

981 – Reset to Factory Default

a.	ON	(Sat 80h)
b.	OFF	(Sat 81h)
c.	Vol +	-
d.	Vol -	-
e.	Mute	-
f.	Input	-

HOW TO INITIALIZE THE DirecTV Monitor

The purpose of initialization is to place the set in a new out of box condition. The customer will be prompted to select a language and program channels after the set has been initialized.
To put the program back at the factory-default, initialize the DirecTV Monitor using the following procedure.

1. Turn the power on.
2. Enter the service mode.
3. Press [FREEZE] button on the remote control unit to initialize the DirecTV Monitor.
4. "INITIALIZED" will appear in the upper right of the screen. "INITIALIZED" color will change to green from red when initialization is completed.

Note: To cancel the service mode, press [⏻] button on the remote control unit.

FIRMWARE RENEWAL MODE

Equipment Required

a. USB storage device
b. Remote Control Unit

Firmware Update Procedure

Note: There are two states (the User Upgrade and the Factory Upgrade) in firmware update.

User Upgrade	Upgrade the firmware only. The setting values are not initialized.
Factory Upgrade (Firmware upgrade)	Upgrade the firmware and initialize the setting values.
Factory Upgrade (Flash upgrade)	Upgrade the firmware and initialize the setting values along with the setting data adjusted at the factory such as White Balance, etc.

The identification of User Upgrade and Factory Upgrade are done by the filename.

1. Turn the power off and unplug the AC Cord.
2. Insert the USB storage device to the USB port as shown below.

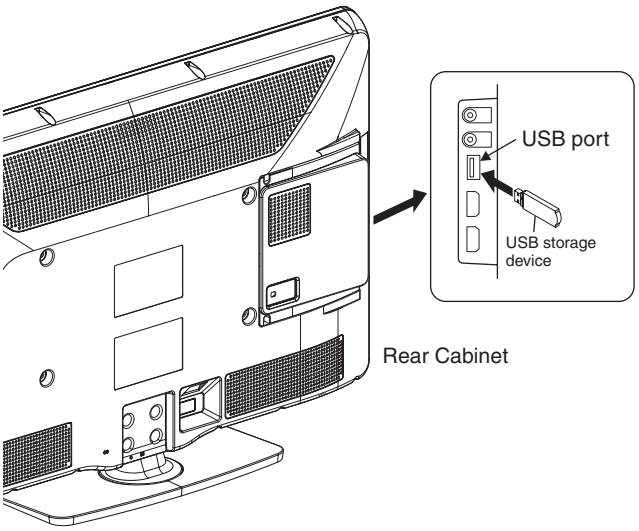

3. Plug the AC cord in the wall outlet and turn the power on.

4. The update will start and the following will appear in the screen.

"*" differs depending on the models.

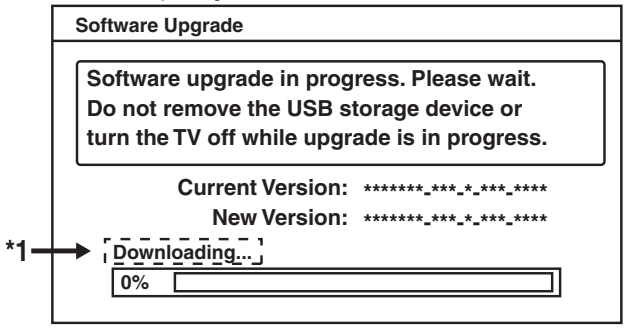

Note: If the above screen isn't displayed, repeat from step 1.

The appearance shown in *1 is described as follows.

Appearance	State
Downloading...	Downloading the firmware from the USB storage device.
Writing...	Writing the downloaded firmware in flash memory.
Checking...	Checking the new firmware.

5. When the firmware update is completed, the following will appear in the screen.

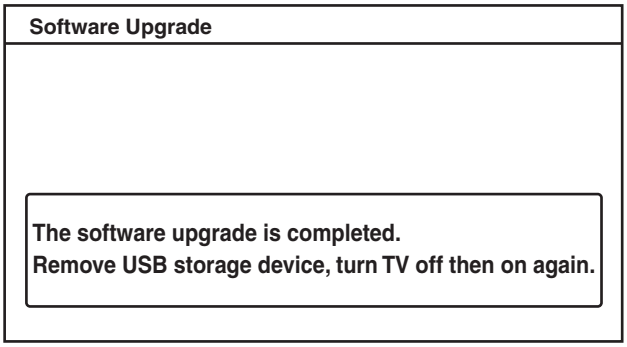

Remove the USB storage device from the USB port.
Turn the power off and turn the power on again.

Note:

When the Factory Upgrade is used, after restarting TV, shift to initial screen menu in service mode. "INITIALIZED" will appear in the upper right of the screen. "INITIALIZED" color will change to green from red when initializing is completed.

HOSPITALITY TV MODE

TV to USB settings

- All settings except for the factory setting will be copied from TV to USB storage device.
- The set value will be preserved in the root directory of the USB storage device.
- All settings will be preserved in the third file.
- When a same file name exists in the USB storage device, the new file will overwrite the previous file.
- All the key input and the shutdown timers will be invalid during the copying process.
- Audio and Video will be muted during the copying process.

How to copy the TV settings to USB storage device

1. Turn the power on.
2. Insert an empty USB storage device to the USB port.
3. Press the [HOME/MENU] button on the setup remote control to display the menu.
4. Select “TV to USB”, “Start now” and press the [OK] button.
5. After the successful completion, “Setting copied to USB” message appears on the screen.

NOTE:
In case of any error during the copying process, the copying process will be stopped with the warning message “Failed. Please retry” on the screen.

USB to TV settings

- All settings except for the factory setting will be copied from USB storage device to TV.
- All the key input and the shutdown timers will be invalid during the copying process.
- Audio and Video will be muted during the copying process.
- When illegal data exist in the file, the copying process will be aborted.
- After the successful completion of the copying process, the new set of values will be adopted by the TV.

How to read the setting values from the USB storage device

1. Turn the power on.
2. Insert an USB storage device to the USB port.
3. Press the [HOME/MENU] button on the setup remote control to display the menu screen.
4. Select “USB to TV”, “Start now” and press [OK] button.
5. After the successful completion, the TV will restart and initialize with the new values. TV shifts to Standby (Green) and TV shifts to Live mode automatically.

NOTE:
In case of any error during the copying process, the copying process will be stopped with the warning message “Failed. Please retry” on the screen.

Status menu screen (optional)

1. Turn the power on.
2. Press the [RECALL/INFO] button on the setup remote control to display the status menu as shown below.

"*" differs depending on the models.

Model number	*****
SW version	*****
Source	*****

3. Press the [RECALL/INFO] button again to cancel the status menu.

TROUBLESHOOTING

FLOW CHART NO.1

The power cannot be turned on.

↓

Is approximately +4.3V voltage supplied to Pin(7, 9) of CN3601 on the Digital Main CBA Unit?

- No → Replace Power Supply CBA Unit.
- Yes ↓

When pressing power switch on the unit, is the LED lighting or flashing?

- No → See FLOW CHART NO.2 <The key operation is not functioning.>
- Yes ↓

When pressing power switch on the remote control unit, is the LED lighting or flashing?

- No → See FLOW CHART NO.3 <No operation is possible from remote control unit. (Operation is possible from the unit.)>
- Yes ↓

Is approximately +3.3V voltage supplied to Pin(4) of CN3602 on the Digital Main CBA Unit?

- No → Replace Digital Main CBA Unit.
- Yes ↓

Replace Power Supply CBA Unit.

FLOW CHART NO.2

The key operation is not functioning.

↓

Is the Pin(2) voltage of CN4001 0V when pressing power switch?

- No → Replace Function CBA Unit.
- Yes ↓

Check the line between Pin(2) of CN4001 and Pin(6) of CN3001, and service it if defective.

FLOW CHART NO.3

No operation is possible from remote control unit. (Operation is possible from the unit.)

↓

Is approximately +3.3V voltage supplied to Pin(3) of CN4052 on the IR Sensor CBA Unit?

- No → Check AL+3.3V line and service it if defective.
- Yes ↓

Is the "L" pulse sent out to Pin(2) of CN4052 on the IR Sensor CBA Unit?

- No → Replace IR Sensor CBA Unit.
- Yes ↓

Is the "L" pulse sent out to Pin(2) of CN3001 on the Digital Main CBA Unit?

- No → Check CL3001 and service it if defective.
- Yes ↓

Replace Digital Main CBA Unit.

FLOW CHART NO.4

Picture does not appear normally.

↓

Digital Main CBA Unit, Interface CBA Unit or LCD Module Assembly may be defective.
Check and replace these parts.

FLOW CHART NO.5

Audio is not output normally.

↓

Are the audio signals output to CN3803?

No → Digital Main CBA Unit or Interface CBA Unit may be defective. Check and replace these parts.

↓ Yes

SP3801, SP3802 or CL3803 may be defective.
Check and replace these parts.

BLOCK DIAGRAMS

1. System Control Block Diagram

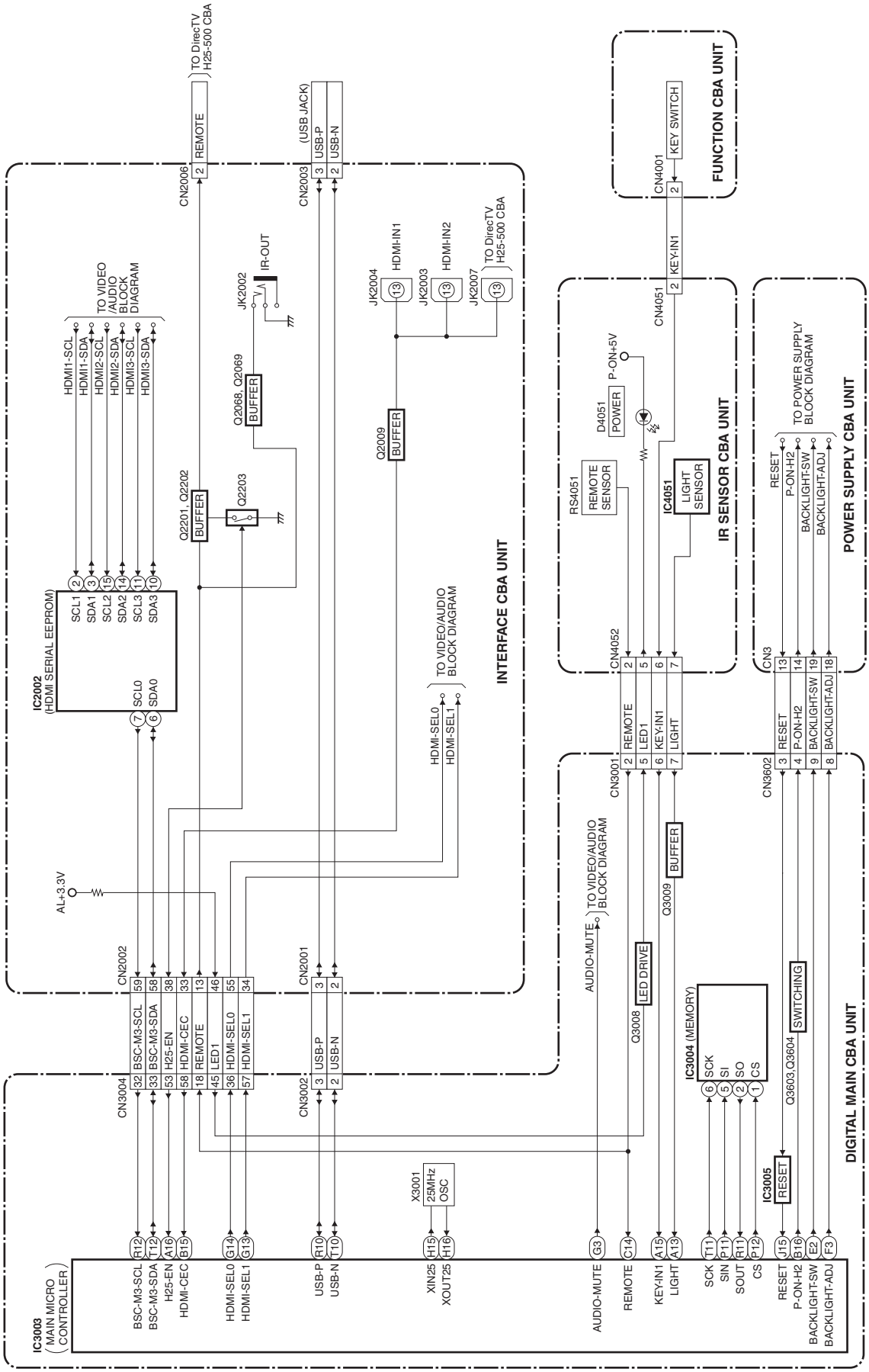

2. Video/Audio Block Diagram

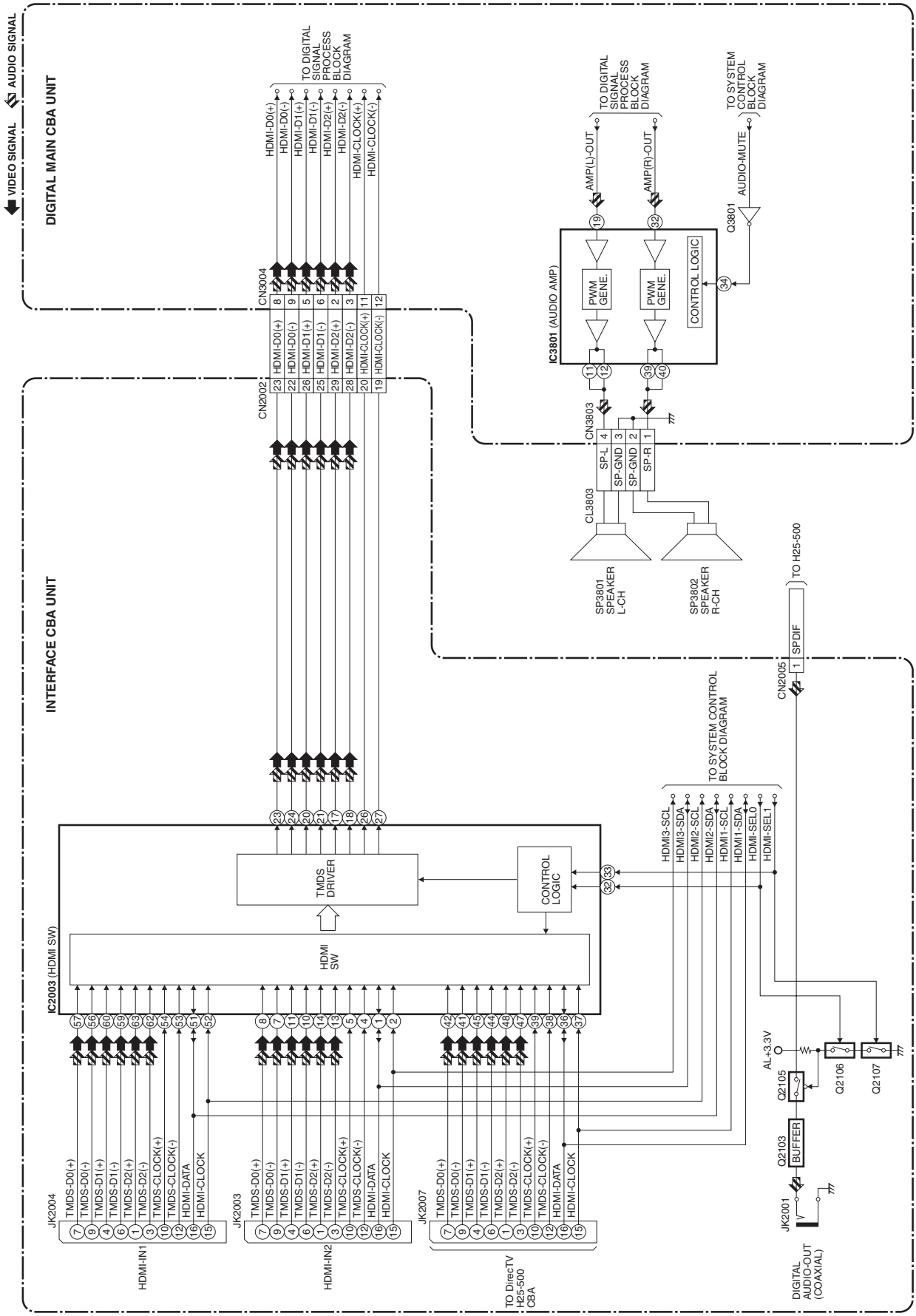

3. Digital Signal Process Block Diagram

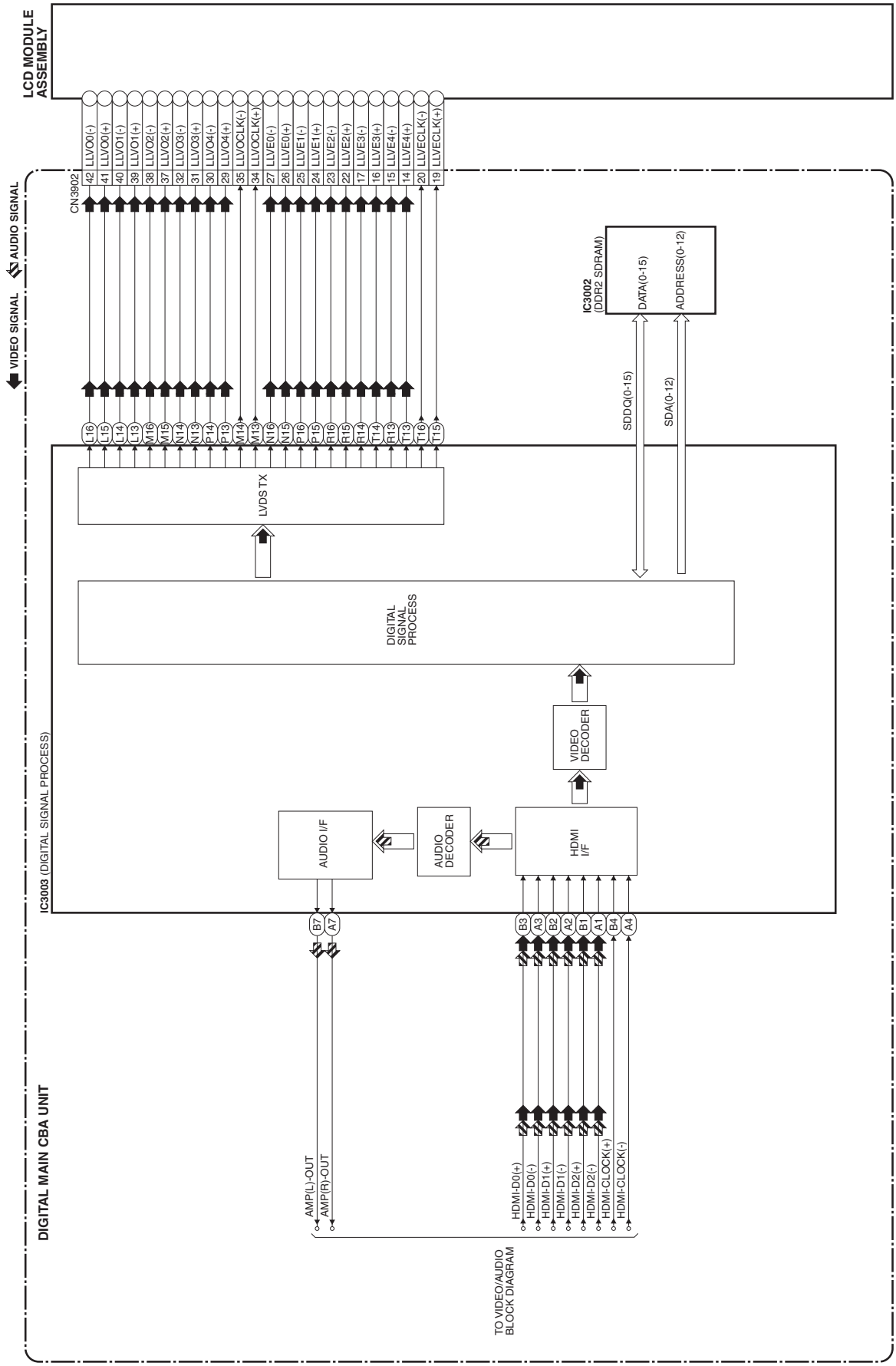

4. Power Supply Block Diagram

CAUTION !
Fixed voltage (or Auto voltage selectable) power supply circuit is used in this unit.
If Main Fuse (F100) is blown , check to see that all components in the power supply circuit are not defective before you connect the AC plug to the AC power supply.
Otherwise it may cause some components in the power supply circuit to fail.

CAUTION ! : For continued protection against risk of fire, replace only with same type 5 A, 250V fuse.
ATTENTION : Utiliser un fusible de rechange de même type de 5A, 250V.

NOTE:
The voltage for parts in hot circuit is measured using hot GND as a common terminal.

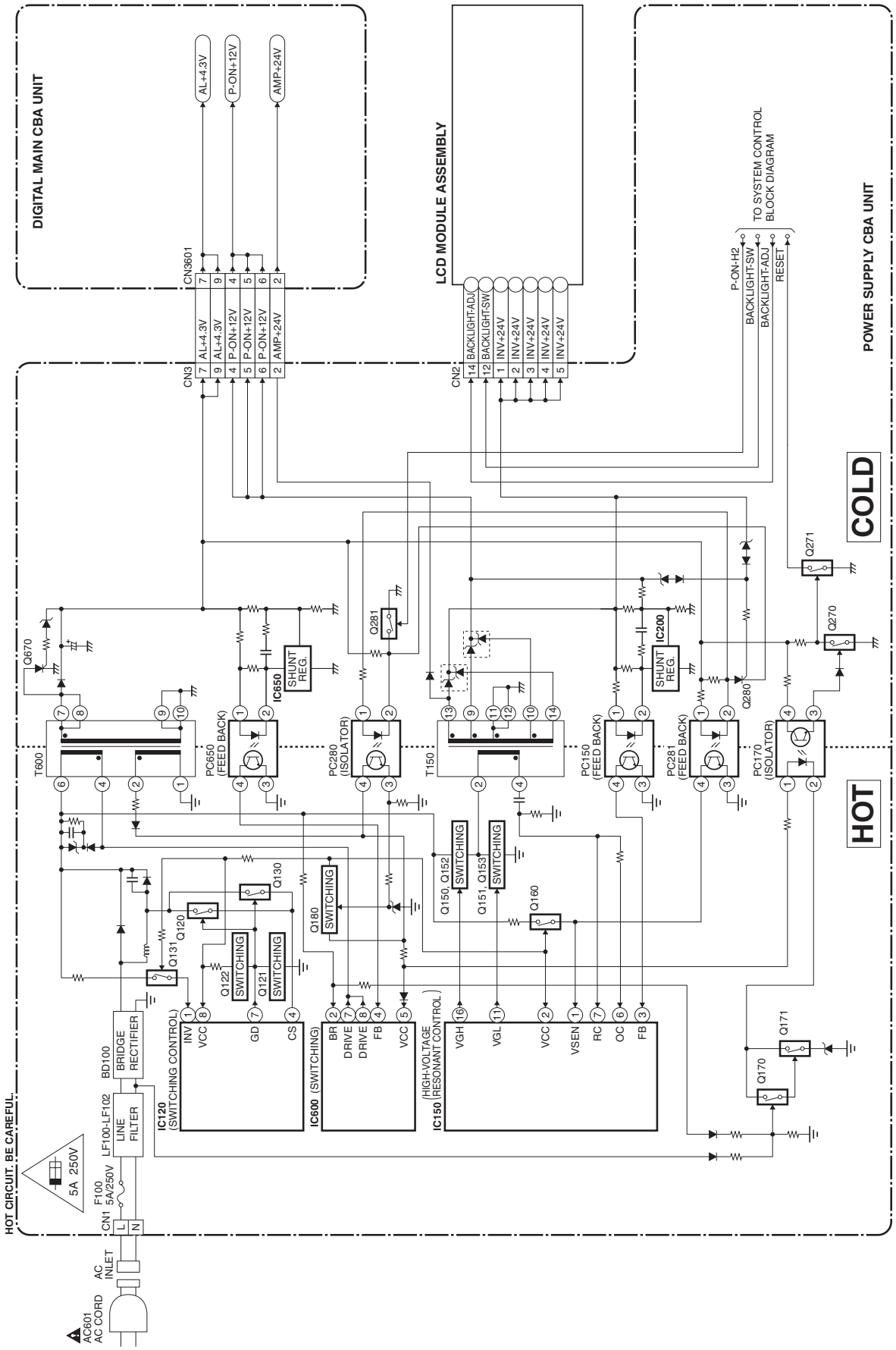

SCHEMATIC DIAGRAMS / CBA AND TEST POINTS

Standard Notes

WARNING

Many electrical and mechanical parts in this chassis have special characteristics. These characteristics often pass unnoticed and the protection afforded by them cannot necessarily be obtained by using replacement components rated for higher voltage, wattage, etc. Replacement parts that have these special safety characteristics are identified in this manual and its supplements; electrical components having such features are identified by the mark "⚠" in the schematic diagram and the parts list. Before replacing any of these components, read the parts list in this manual carefully. The use of substitute replacement parts that do not have the same safety characteristics as specified in the parts list may create shock, fire, or other hazards.

Notes:

1. Do not use the part number shown on these drawings for ordering. The correct part number is shown in the parts list, and may be slightly different or amended since these drawings were prepared.
2. All resistance values are indicated in ohms ($K = 10^3$, $M = 10^6$).
3. Resistor wattages are 1/4W or 1/6W unless otherwise specified.
4. All capacitance values are indicated in μF ($P = 10^{-6}$ μF).
5. All voltages are DC voltages unless otherwise specified.

LIST OF CAUTION, NOTES, AND SYMBOLS USED IN THE SCHEMATIC DIAGRAMS ON THE FOLLOWING PAGES:

1. CAUTION:

CAUTION: FOR CONTINUED PROTECTION AGAINST RISK OF FIRE, REPLACE ONLY WITH SAME TYPE_A,_V FUSE.

ATTENTION: UTILISER UN FUSIBLE DE RECHANGE DE MÊME TYPE DE_A,_V.

2. CAUTION:

Fixed Voltage (or Auto voltage selectable) power supply circuit is used in this unit.
If Main Fuse (F100) is blown, first check to see that all components in the power supply circuit are not defective before you connect the AC plug to the AC power supply. Otherwise it may cause some components in the power supply circuit to fail.

3. Note:

1. Do not use the part number shown on the drawings for ordering. The correct part number is shown in the parts list, and may be slightly different or amended since the drawings were prepared.
2. To maintain original function and reliability of repaired units, use only original replacement parts which are listed with their part numbers in the parts list section of the service manual.

4. Voltage indications on the schematics are as shown below:

Plug the TV power cord into a standard AC outlet.:

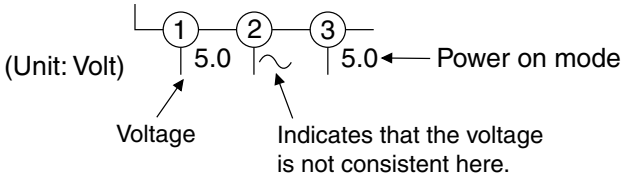

5. How to read converged lines

1-D3
- Distinction Area
- Line Number (1 to 3 digits)

Examples:
1. "1-D3" means that line number "1" goes to the line number "1" of the area "D3".
2. "1-B1" means that line number "1" goes to the line number "1" of the area "B1".

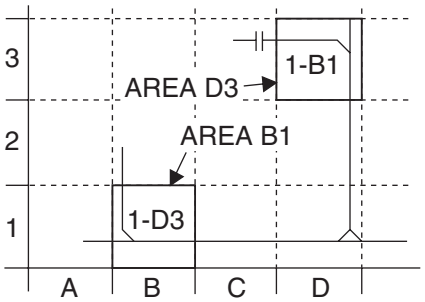

6. Test Point Information

: Indicates a test point with a jumper wire across a hole in the PCB.

: Used to indicate a test point with a component lead on foil side.

: Used to indicate a test point with no test pin.

: Used to indicate a test point with a test pin.

The reference number of parts on Schematic Diagrams can be retrieved by application search function.

Power Supply Schematic Diagram

CAUTION !
Fixed voltage (or Auto voltage selectable) power supply circuit is used in this unit.
If Main Fuse (F100) is blown , check to see that all components in the power supply circuit are not defective before you connect the AC plug to the AC power supply.
Otherwise it may cause some components in the power supply circuit to fail.

5A 250V

CAUTION ! : For continued protection against risk of fire, replace only with same type 5 A, 250V fuse.
ATTENTION : Utiliser un fusible de rechange de même type de 5A, 250V.

NOTE:
The voltage for parts in hot circuit is measured using hot GND as a common terminal.

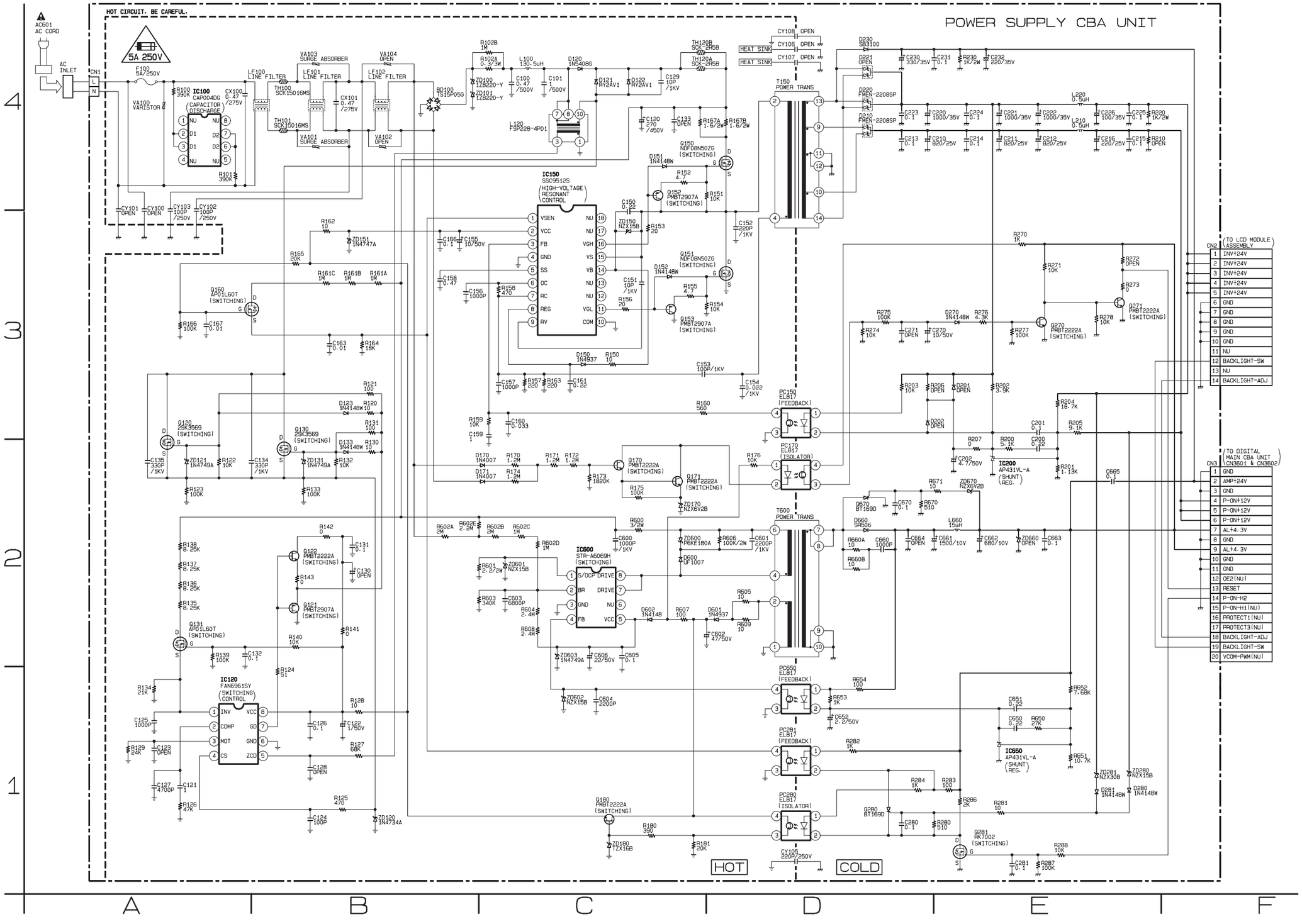

Function Schematic Diagram

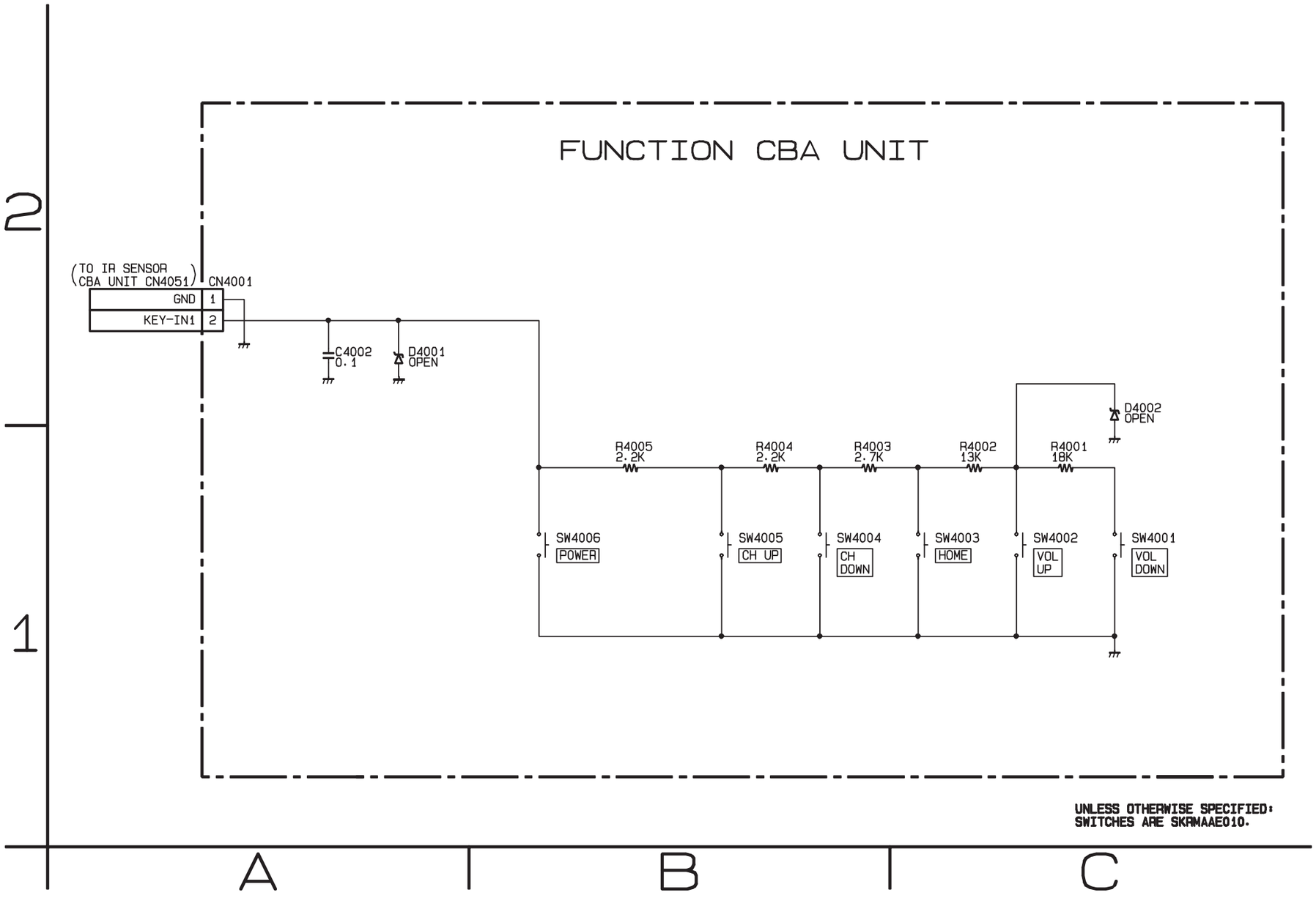

IR Sensor Schematic Diagram

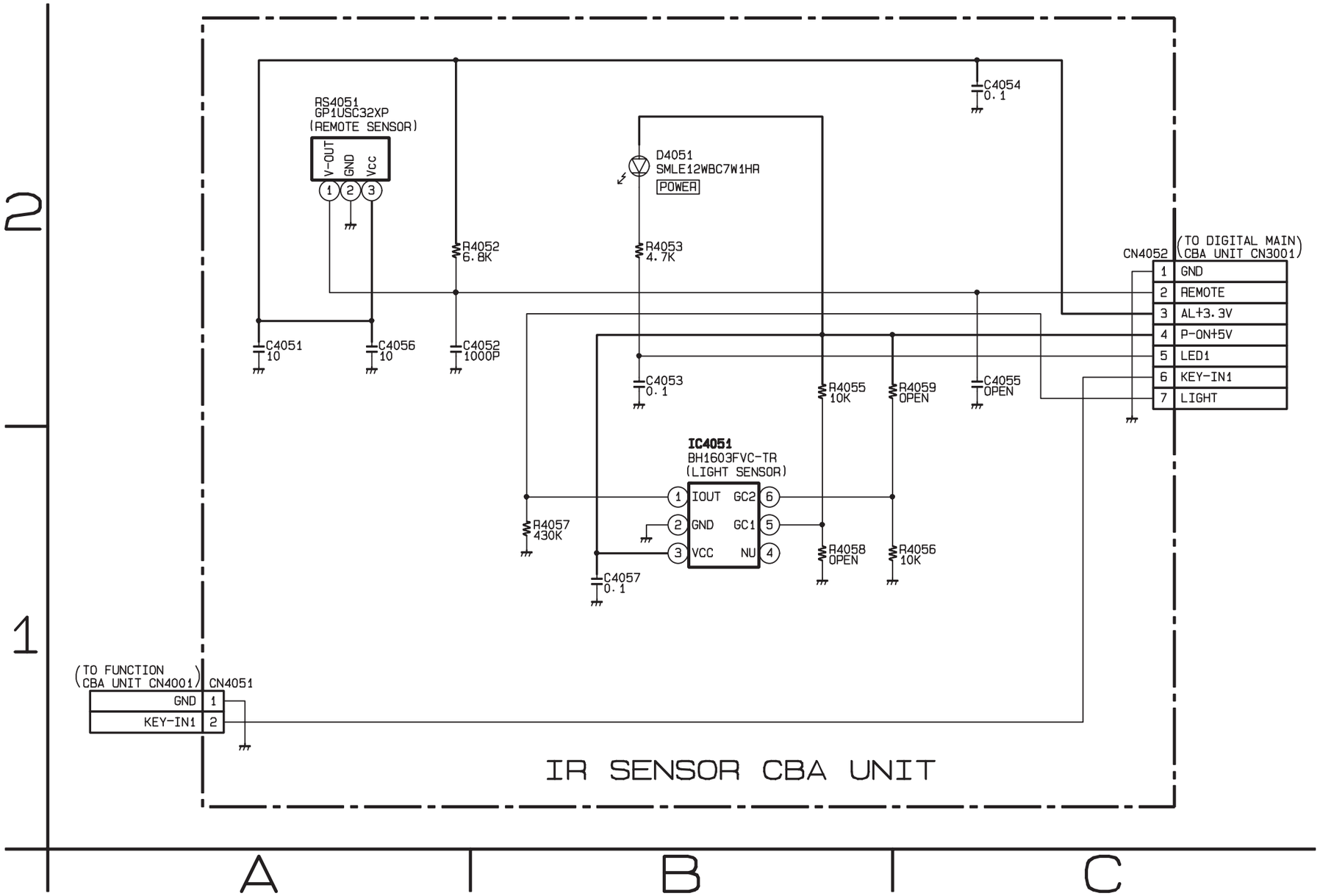

Digital Main 1 Schematic Diagram

*1 **NOTE:**
The order of pins shown in this diagram is different from that of actual IC3003.
IC3003 is divided into five and shown as IC3003 (1/5) ~ IC3003 (5/5) in this Digital Main Schematic Diagram Section.

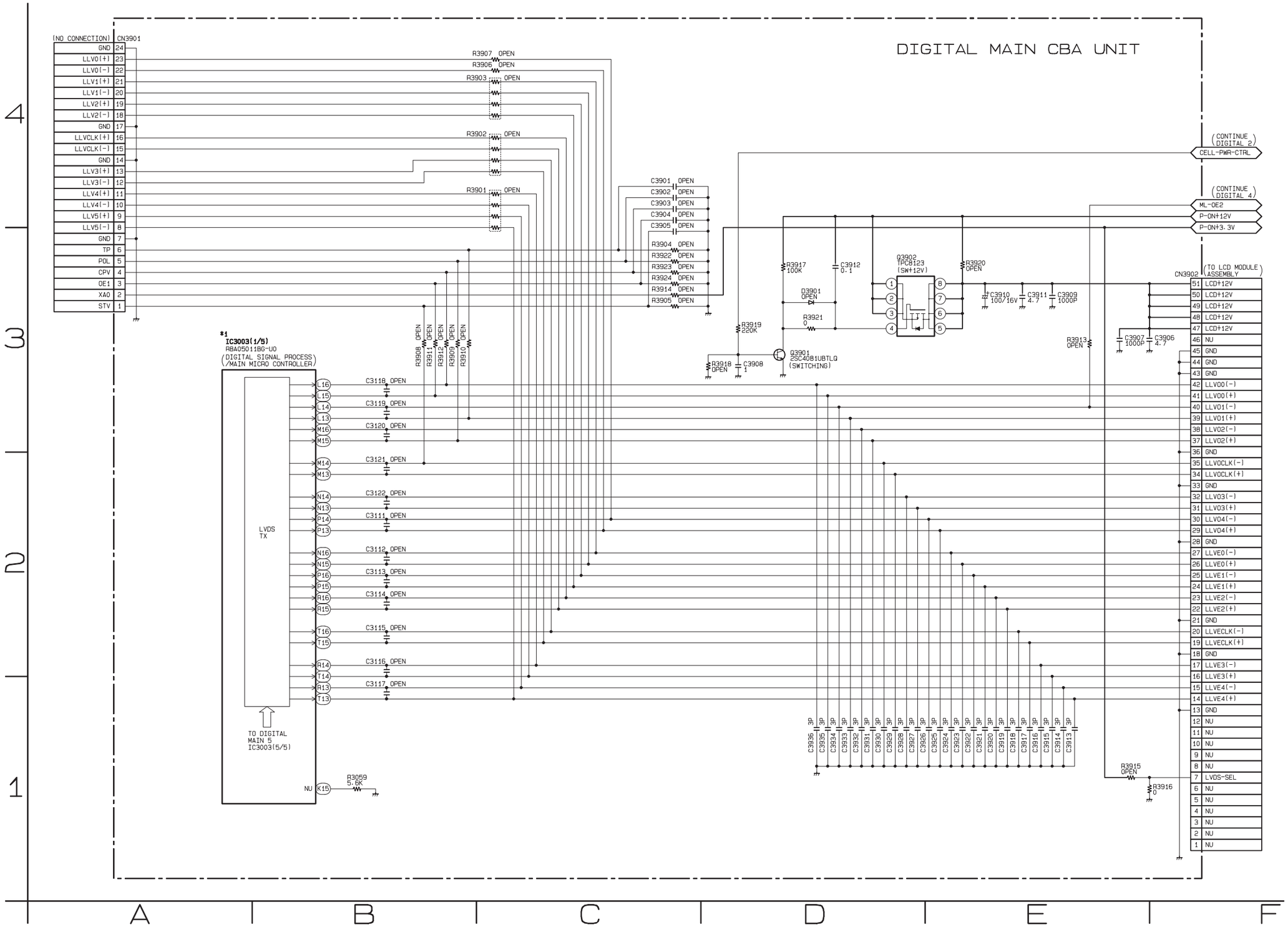

Digital Main 2 Schematic Diagram

*1 **NOTE:**
The order of pins shown in this diagram is different from that of actual IC3003.
IC3003 is divided into five and shown as IC3003 (1/5) ~ IC3003 (5/5) in this Digital Main Schematic Diagram Section.

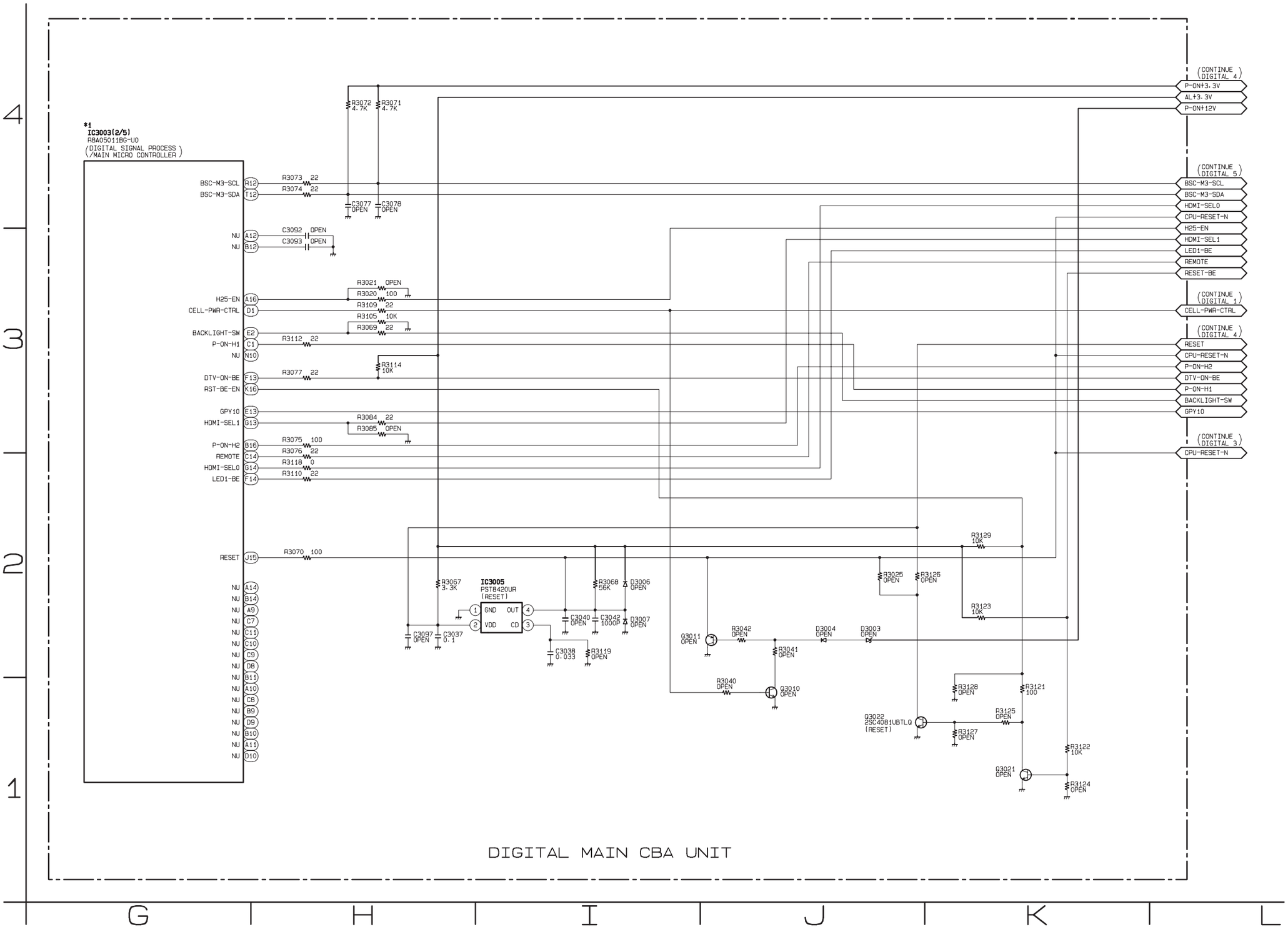

Digital Main 3 Schematic Diagram

*1 **NOTE:**
The order of pins shown in this diagram is different from that of actual IC3003.
IC3003 is divided into five and shown as IC3003 (1/5) ~ IC3003 (5/5) in this Digital Main Schematic Diagram Section.

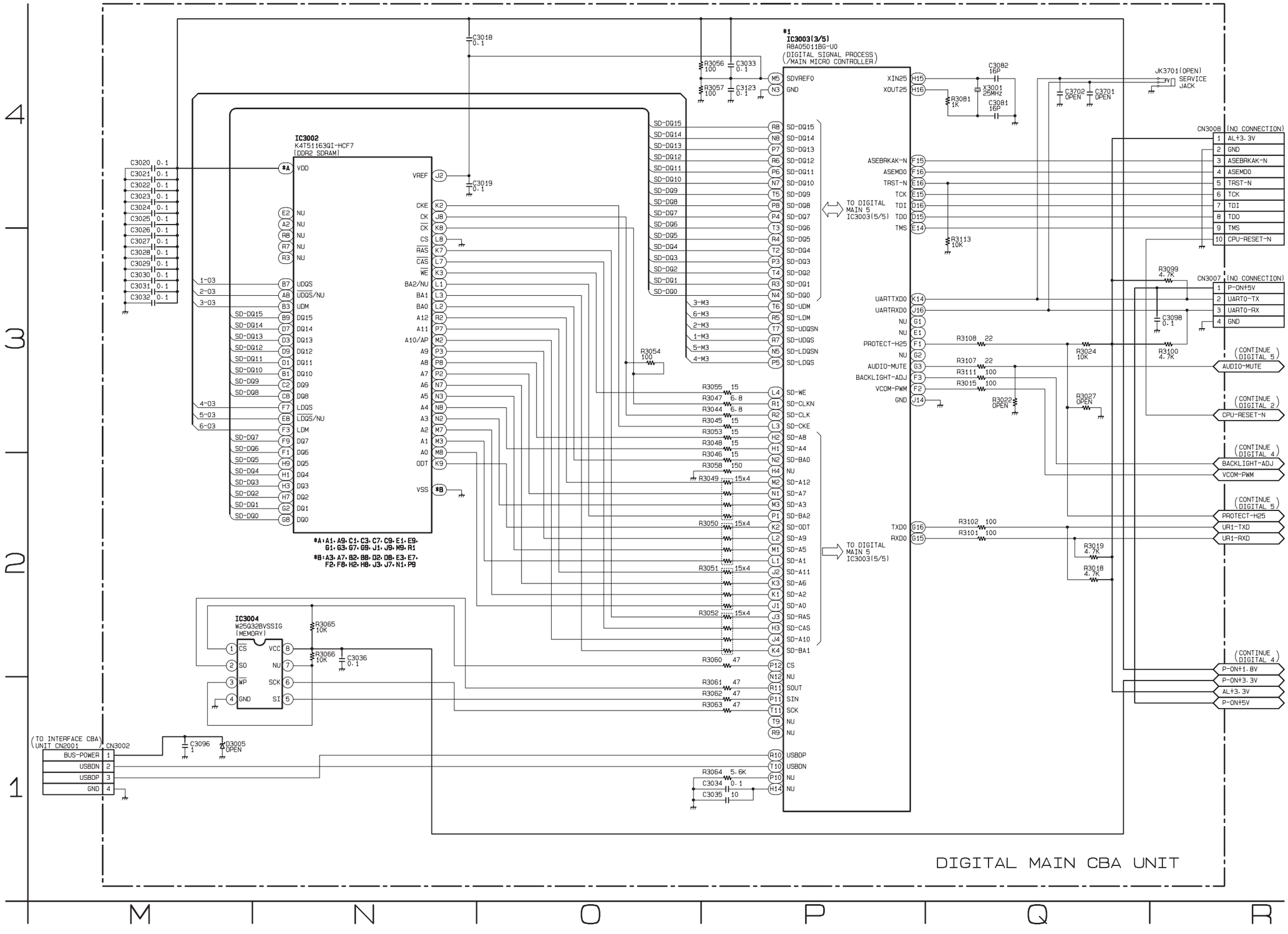

Digital Main 4 Schematic Diagram

*1 **NOTE:**
The order of pins shown in this diagram is different from that of actual IC3003.
IC3003 is divided into five and shown as IC3003 (1/5) ~ IC3003 (5/5) in this Digital Main Schematic Diagram Section.

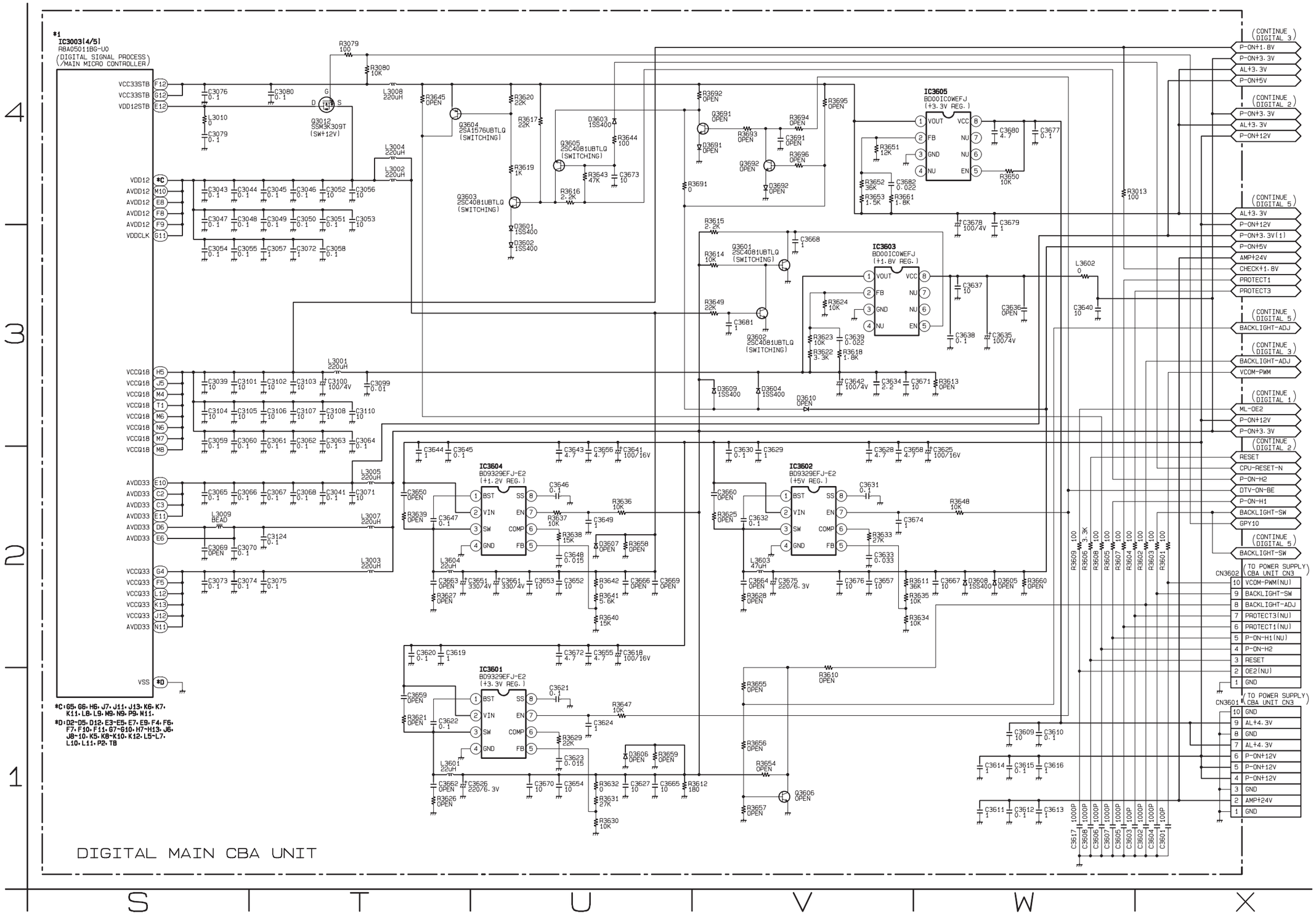

A1APUSCD4

Digital Main 5 Schematic Diagram

*1 **NOTE:**
The order of pins shown in this diagram is different from that of actual IC3003.
IC3003 is divided into five and shown as IC3003 (1/5) ~ IC3003 (5/5) in this Digital Main Schematic Diagram Section.

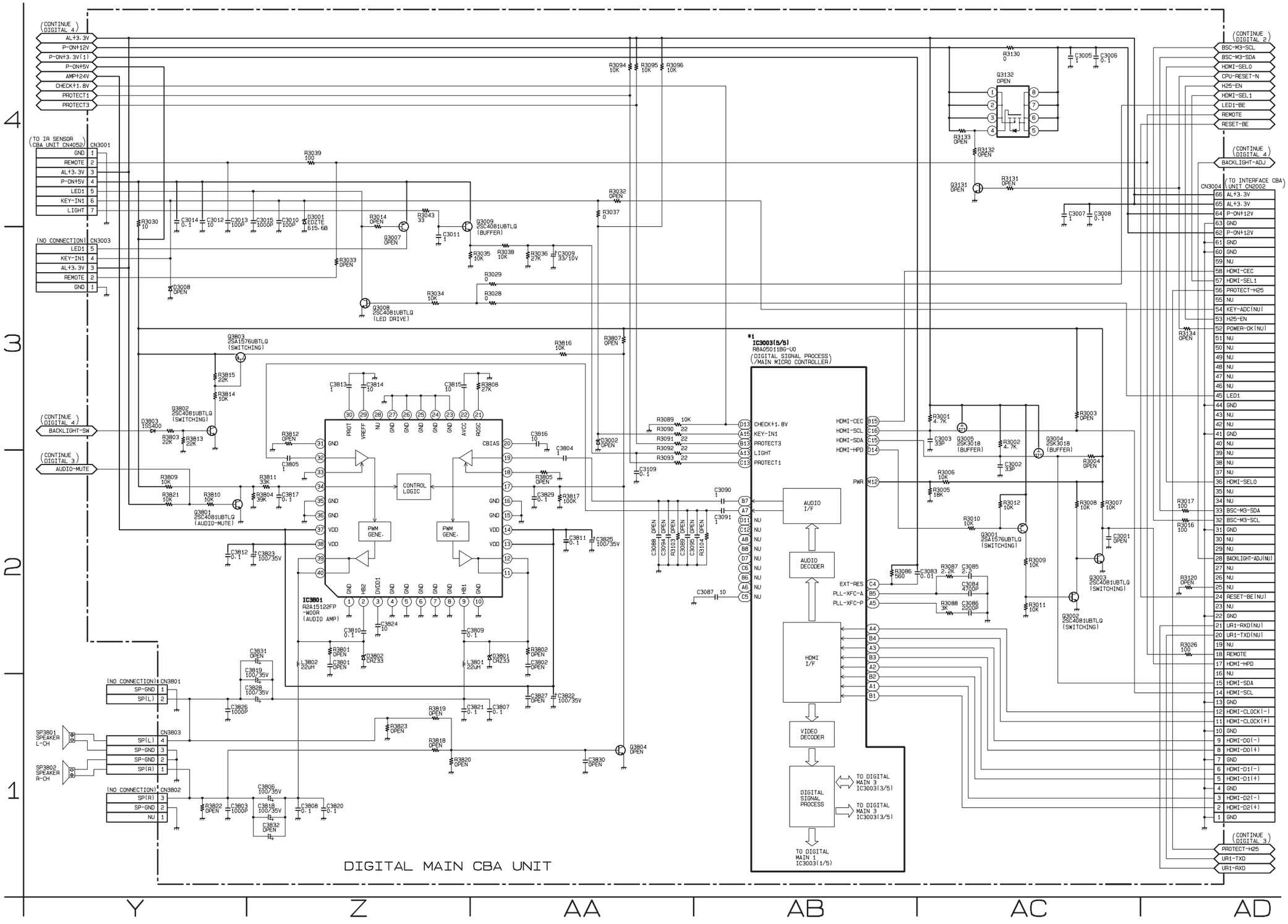

Interface 1 Schematic Diagram

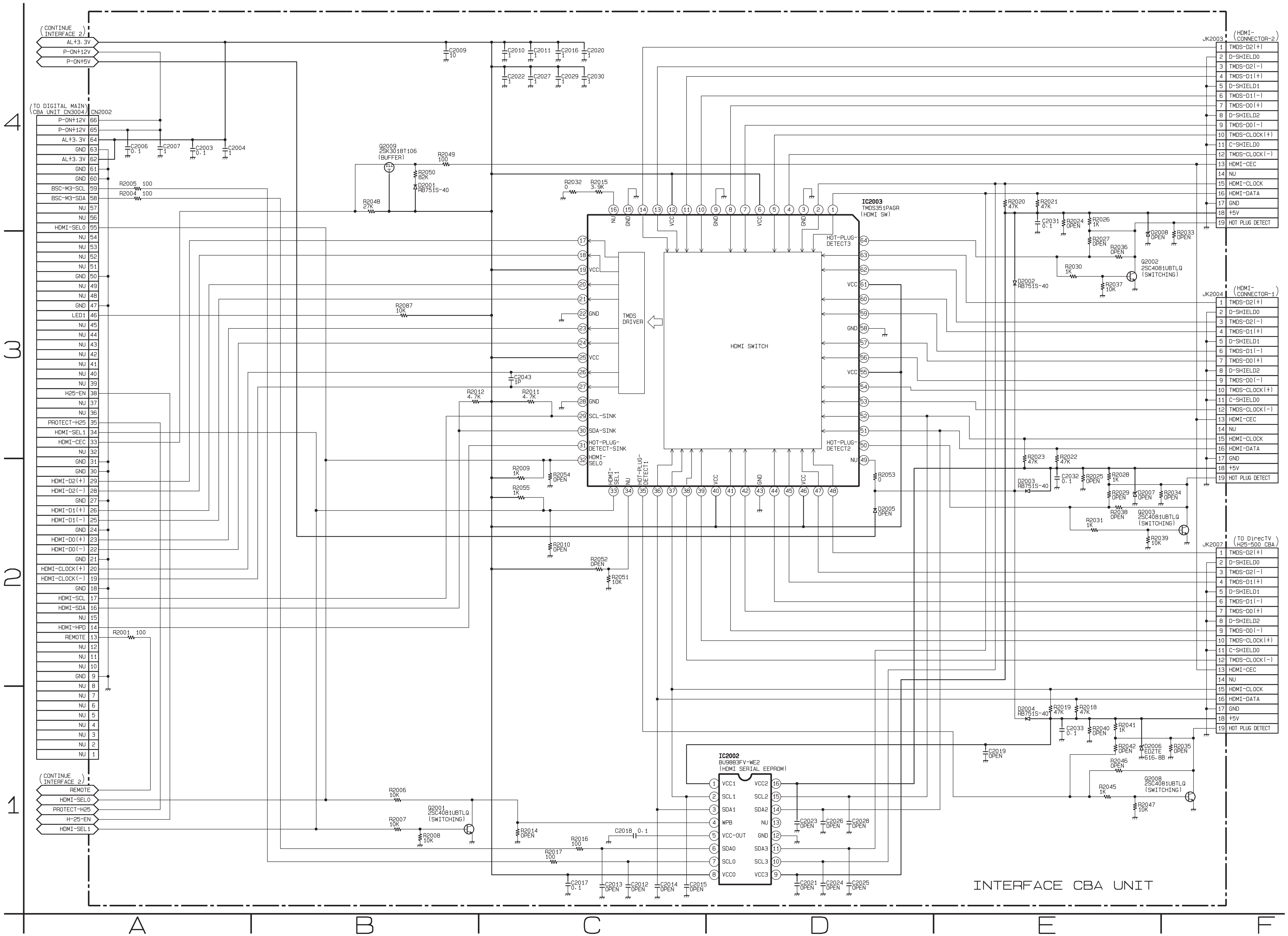

A1APUSCINT1

Interface 2 Schematic Diagram

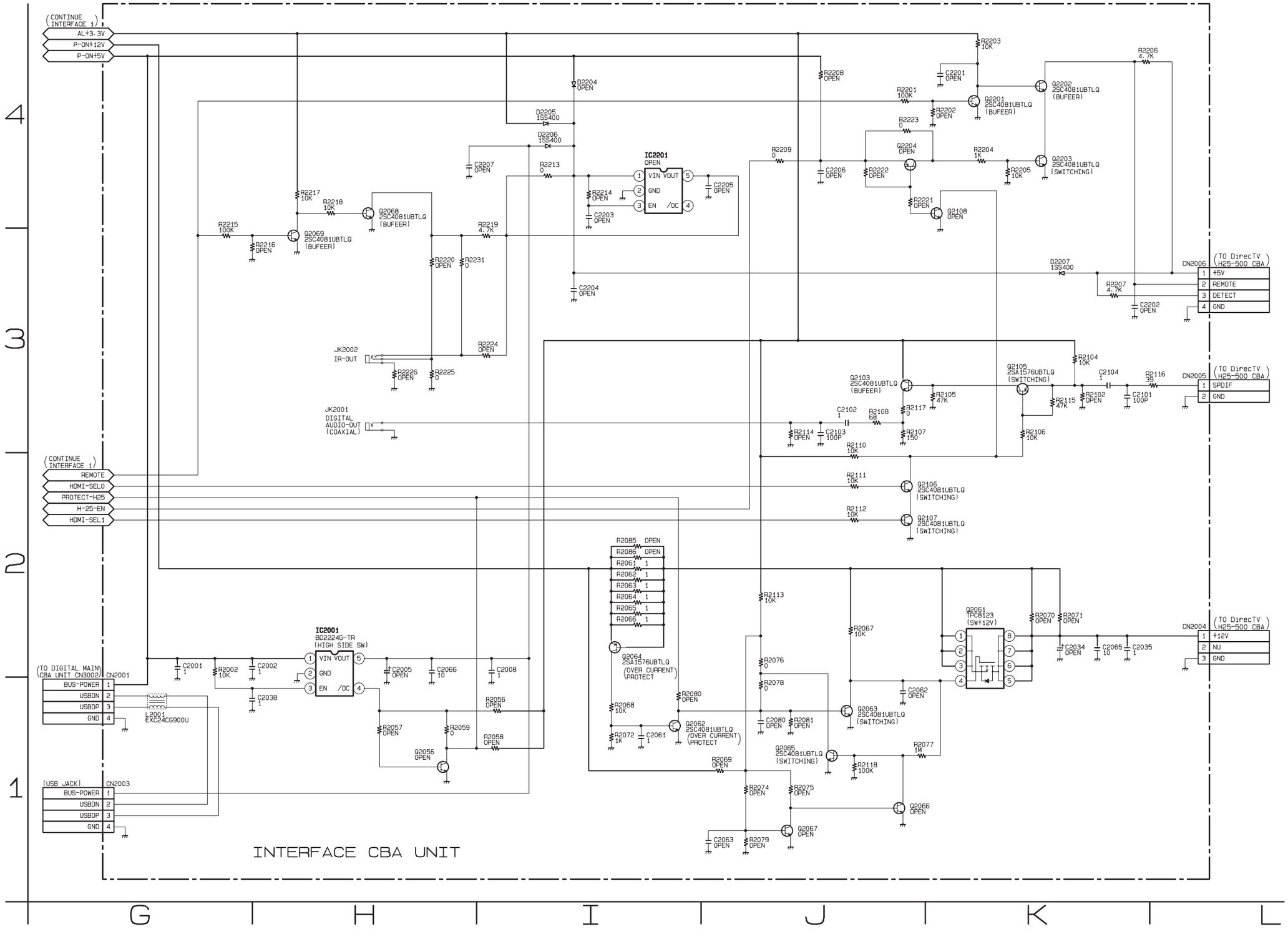

A1APUSCINT2

Power Supply CBA Top View

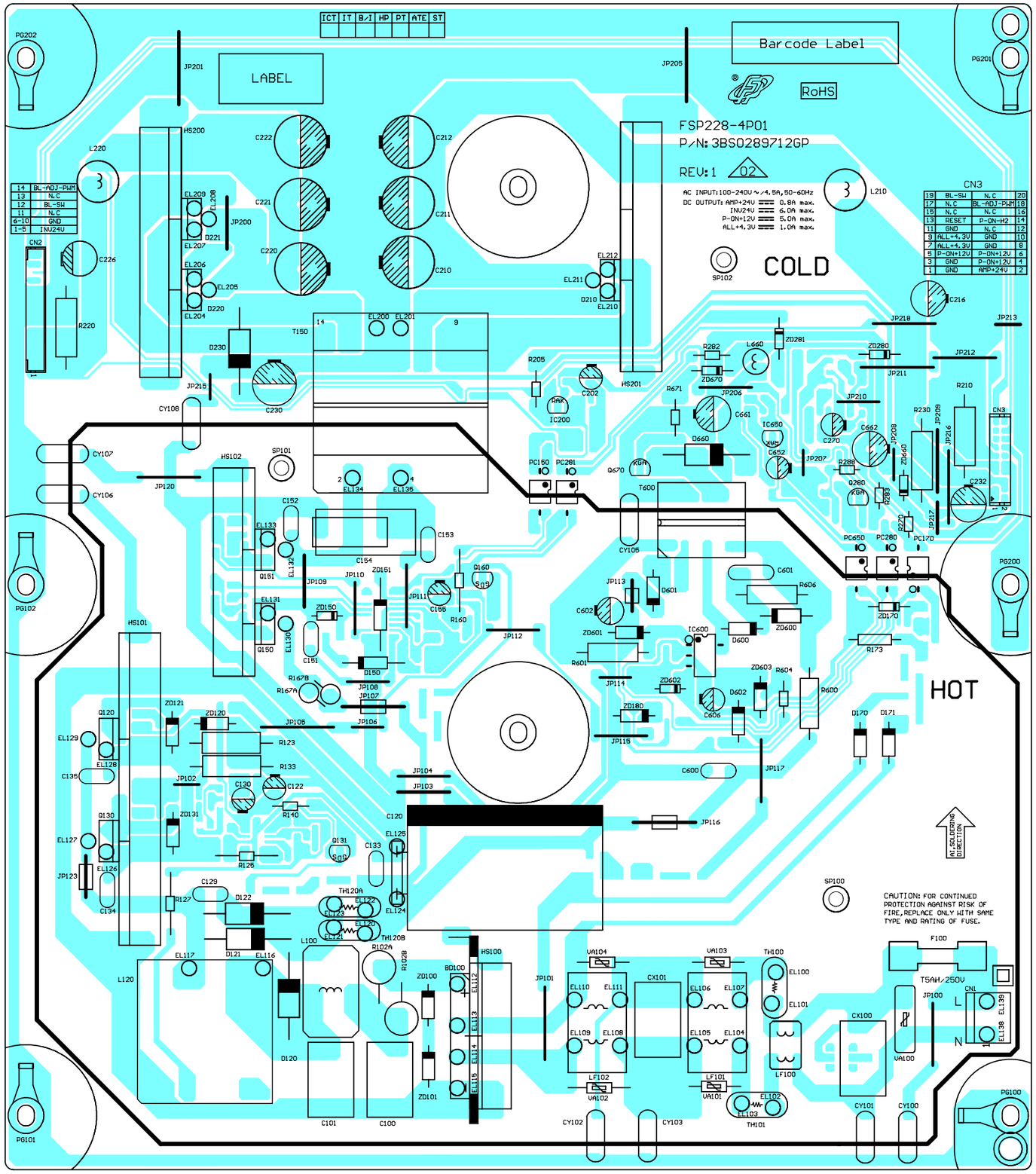

CAUTION !
Fixed voltage (or Auto voltage selectable) power supply circuit is used in this unit.
If Main Fuse (F100) is blown , check to see that all components in the power supply circuit are not defective before you connect the AC plug to the AC power supply.
Otherwise it may cause some components in the power supply circuit to fail.

Because a hot chassis ground is present in the power supply circuit, an isolation transformer must be used when repairing. Also, in order to have the ability to increase the input slowly, when troubleshooting this type of power supply circuit, a variable isolation transformer is required.

5A 250V

CAUTION ! : For continued protection against risk of fire, replace only with same type 5 A, 250V fuse.
ATTENTION : Utiliser un fusible de rechange de même type de 5A, 250V.

NOTE:
The voltage for parts in hot circuit is measured using hot GND as a common terminal.

Power Supply CBA Bottom View

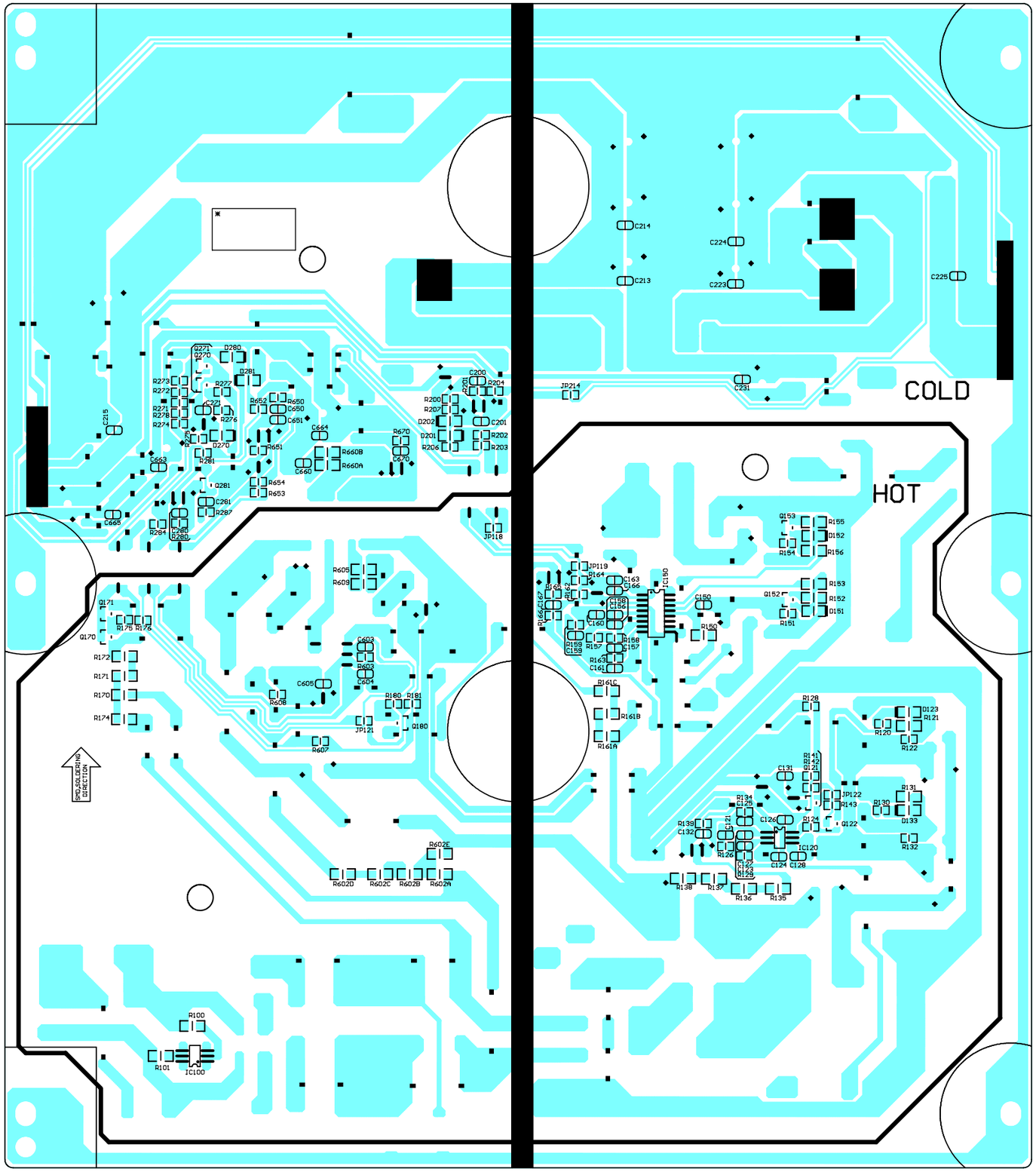

CAUTION !
Fixed voltage (or Auto voltage selectable) power supply circuit is used in this unit.
If Main Fuse (F100) is blown , check to see that all components in the power supply circuit are not defective before you connect the AC plug to the AC power supply.
Otherwise it may cause some components in the power supply circuit to fail.

Because a hot chassis ground is present in the power supply circuit, an isolation transformer must be used when repairing. Also, in order to have the ability to increase the input slowly, when troubleshooting this type of power supply circuit, a variable isolation transformer is required.

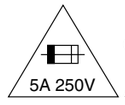

CAUTION ! : For continued protection against risk of fire, replace only with same type 5 A, 250V fuse.
ATTENTION : Utiliser un fusible de rechange de même type de 5A, 250V.

NOTE:
The voltage for parts in hot circuit is measured using hot GND as a common terminal.

WIRING DIAGRAM

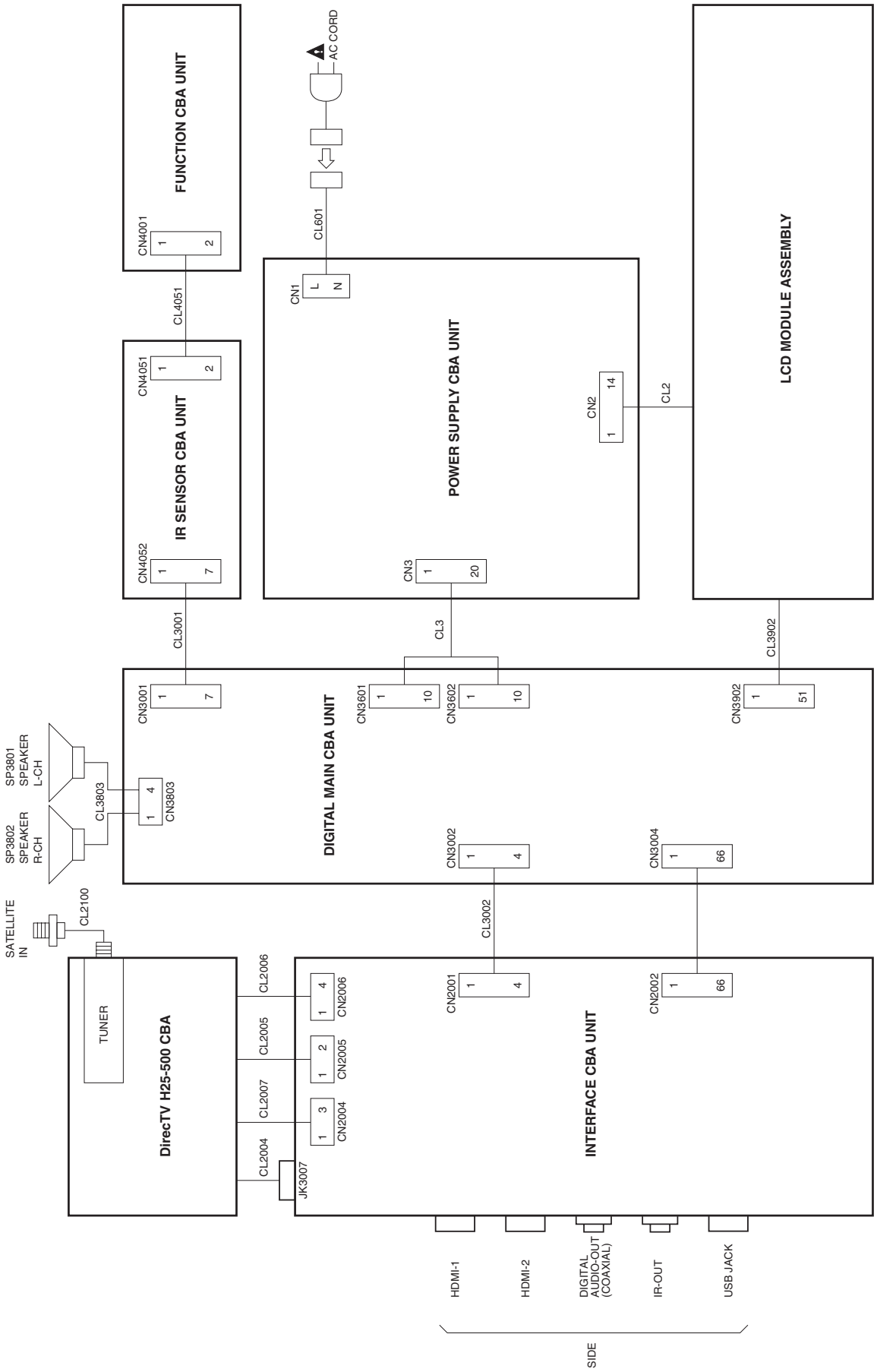

EXPLODED VIEWS

Cabinet

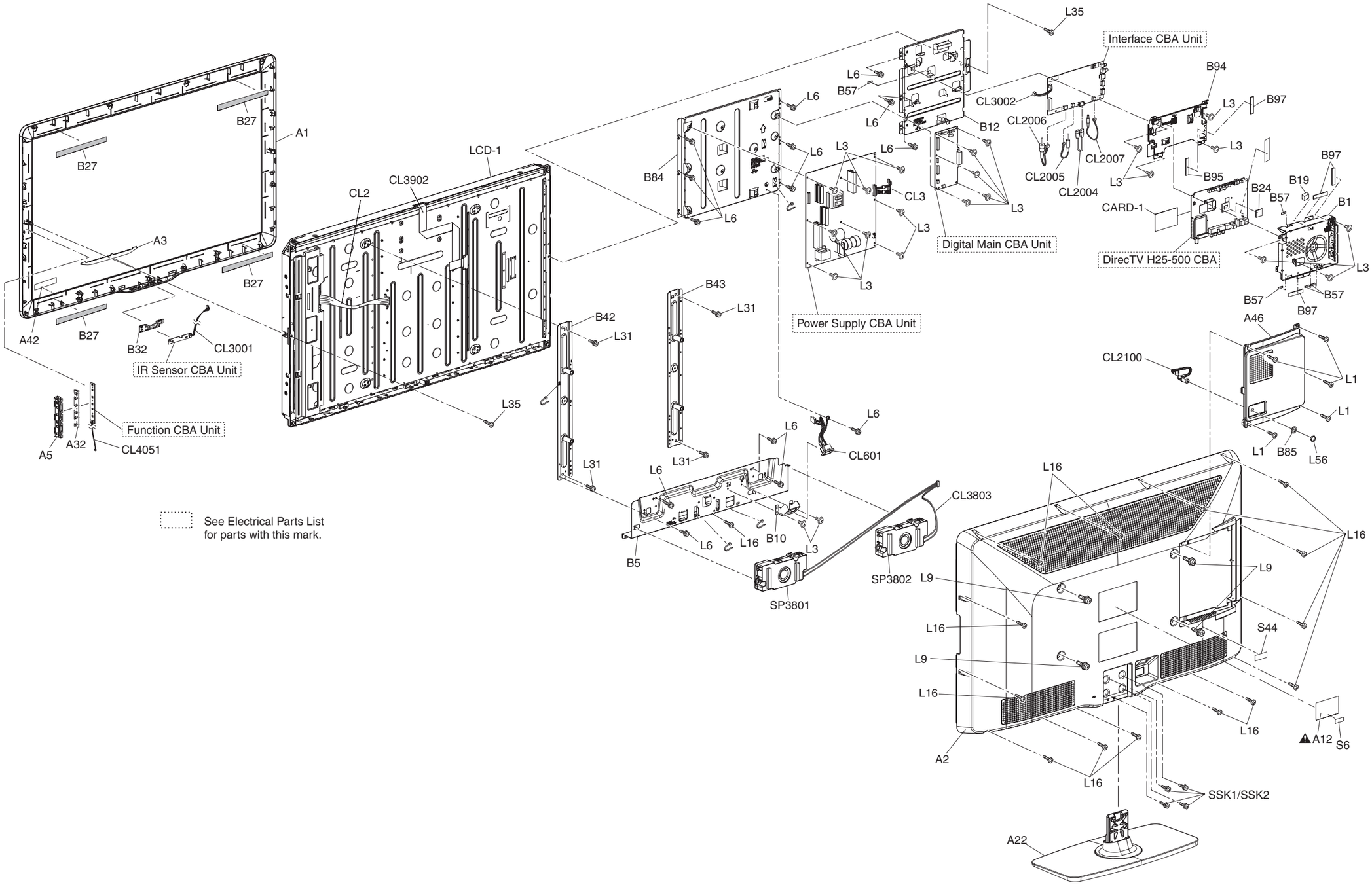

See Electrical Parts List for parts with this mark.

Packing

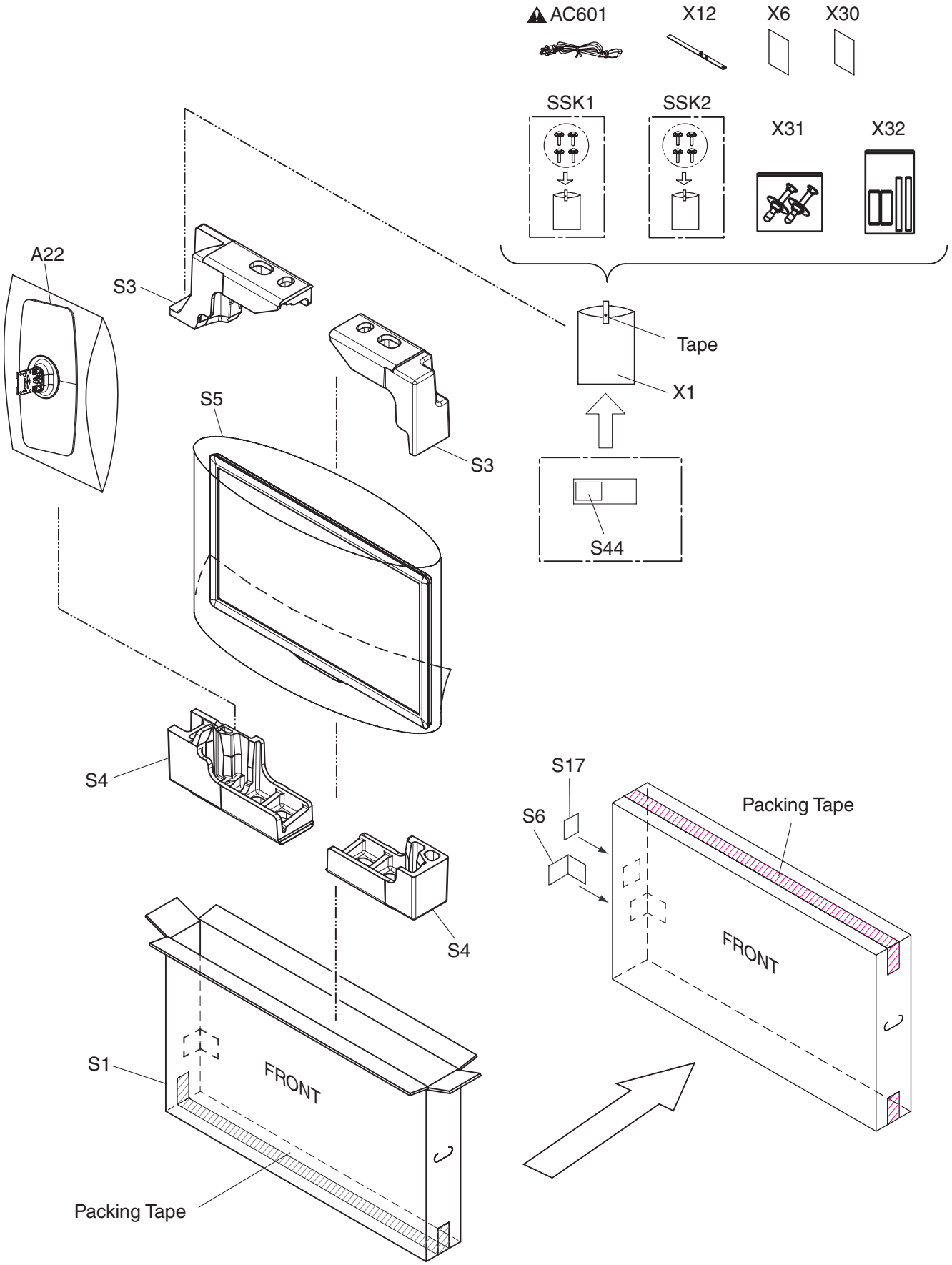
AC601
X12
X6
X30
SSK1
SSK2
X31
X32
A22
S3
Tape
X1
S5
S3
S44
S4
S17
S6
Packing Tape
FRONT
S4
S1
FRONT
Packing Tape

PARTS LIST [40HFL5783X/F7 (Serial No.: VM1)]

Mechanical Parts

PRODUCT SAFETY NOTE: Products marked with a ⚠ have special characteristics important to safety. Before replacing any of these components, read carefully the product safety notice in this service manual. Don't degrade the safety of the product through improper servicing.

NOTE: Parts that are not assigned part numbers (---------) are not available.

Ref. No.	Description	Part No.
A1	FRONT CABINET A17P5UH	1EM027405
A2	REAR CABINET A1APUUD	1EM127501
A3	DECORATION PANEL A11P4UH	1EM225283
A5	KNOB FRAME A1APUUD	1EM333741
A12⚠	RATING LABEL A1APUUD	---------
A22	40W STAND ASSEMBLY (SWIVEL) A17PZUH	1EM029950
A32	FUNCTION BUTTON A17PXUH	1EM330555
A42	ENERGY GUIDE LABEL A1APUUD	---------
A46	REAR COVER A1APUUD	1EM029707
B1	SHIELD BOX A1AFUUD	1EM127393
B5	STAND BRACKET A17P5UH	1EM027407
B10	AC INLET HOLDER A17PXUH	1EM225795
B12	PCB HOLDER A1APUUD	1EM029708
B19	GASKET A71F0UH	1EM424393
B24	THERMAL SHEET TMS-14-20 12X12	XK10000X4011
B27	CLOTH(10X180XT0.5) L0336JG	0EM408827
B32	SHIELD PLATE A11P4UH	1EM329858
B42	WALL MOUNT BRACKET(L) A17P1UH	1EM027567
B43	WALL MOUNT BRACKET(R) A17P1UH	1EM027568
B57	GASKET(4X15XT3.0) A0CN0EP	1EM431762
B84	POW PCB HOLDER A1APUUD	1EM029865
B85	WASHER(D14XD9.6XT1) ST200UA	0EM408262A
B94	INTERFACE PCB HOLDER A1AFUUD	1EM127394
B95	GASKET(10X50XT2) A91FSUH	1EM430237
B97	GASKET(10X50XT4) A1AFUUD	1EM438008
CARD-1	SMART CARD P6K SMART CARD	UMCJCDHMX001
CL2	WIRE ASSEMBLY 14PIN 14PIN/255MM	WX1A17PY-007
CL3	WIRE ASSEMBLY 20PIN 115MM 20PIN/115MM	WX1A17PY-003
CL601	WIRE ASSEMBLY 3PIN 120MM 3PIN/120MM	WX1A17PY-016
CL2004	HDMI CABLE HDMI CABLE 105MM	WHZ101SCP001
CL2005	COAXIAL CABLE 2PIN 2PIN/110MM	WX1A1AFUC003
CL2006	IR CABLE 4PIN 4PIN/115MM	WX1A1AFUC002
CL2007	DC JACK CABLE 2PIN 2PIN/70MM	WX1A1AFUC004
CL2100	RF CABLE RF CABLE 100MM	WPZ101WET001
CL3001	WIRE ASSEMBLY 7PIN 330MM 7PIN/330MM	WX1A17PY-015
CL3002	WIRE ASSEMBLY 4PIN 4PIN/35MM	WX1A1AFUC001
CL3803	WIRE ASSEMBLY 4PIN 4PIN/485MM/330MM	WX1A17PY-024
CL3902	LVDS FFC WIRE ASSEMBLY 51PIN 450MM 51PIN/450MM	WX1A17PYJ002
CL4051	WIRE ASSEMBLY 2PIN 2PIN/730MM	WX1A17P6-325
L1	SCREW P-TIGHT 3X10 BIND HEAD+	GBHP3100
L3	ASSEMBLED SCREW(D9/M3X5) A14P1UH	1EM433298
L6	DOUBLE SEMS SCREW M4X6 M4X6	FPJ34060
L9	DOUBLE SEMS SCREW M8X18 M8X18	FPH38180
L16	SCREW P-TIGHT 3X12 BIND HEAD+ BLK	GBHP3120
L31	DOUBLE SEMS SCREW M5X8 M5X8 PAN HEAD+	FPJ35080
L35	SCREW P-TIGHT 3X14 WASHER HEAD+	GCJP3140
L56	NUT 3/8-32UNEF	0EM401451A
SSK1	STAND SCREW KIT A17P5UH (DOUBLE SEMS SCREW M5X20 M5X20)	1ESA28287
SSK2	STAND SCREW KIT(SECURITY) A17PZUH (SECURITY SCREW M5X20 A17PZUH)	1ESA30849
LCD-1	TFT-LCD MODULE 40W 60HZ LTA400HM07	UDULCD0SM043
SP3801	SPEAKER MAGNETIC BOX 8OHM/10W SB-05F71A	DS08050XQ013
SP3802	SPEAKER MAGNETIC BOX 8OHM/10W SB-05F71A	DS08050XQ013
PACKING		
S1	CARTON A1APUUD	1EM333580
S3	STYROFOAM TOP A1APUUD	1EM029765
S4	STYROFOAM BOTTOM A1APUUD	1EM029766
S5	SET BAG A17P5UH	1EM331778
S6	SERIAL NO. LABEL A17FZUH	---------
S17	CARTON LABEL A1APUUD	---------
S44	ID LABEL A1AFUUD	---------
ACCESSORIES		
AC601⚠	AC CORD WITH GND WIRE PH8CFEDGN0A-09B/3030	WBV3020LW001
X1	BAG POLYETHYLENE 235X365XT0.03	0EM408420A
X6	QUICK START GUIDE A1AFUUD	1EMN29800A
X12	CABLE MANAGEMENT TIE(BLACK) A01F2UH	1EM431197
X30	WARRANTY SHEET A17FZUH	1EMN29039
X31	SECURITY SCREW KIT A17FZUH	1EM332298
X32	SECURITY TAPE KIT A17FZUH	1EM332299

Electrical Parts

PRODUCT SAFETY NOTE: Products marked with a ⚠ have special characteristics important to safety. Before replacing any of these components, read carefully the product safety notice in this service manual. Don't degrade the safety of the product through improper servicing.

NOTES:

1. Parts that are not assigned part numbers (---------) are not available.
2. Tolerance of Capacitors and Resistors are noted with the following symbols.

C.....±0.25%	D.....±0.5%	F.....±1%
G.....±2%	J.....±5%	K.....±10%
M.....±20%	N.....±30%	Z.....+80/-20%

DirecTV H25-500 CBA

Ref. No.	Description	Part No.
	DirecTV H25-500 CBA	UPBMATHMX001

POWER SUPPLY CBA UNIT

Ref. No.	Description	Part No.
	POWER SUPPLY CBA UNIT	UPBPSPFSP005

INTERFACE CBA UNIT

Ref. No.	Description	Part No.
	INTERFACE CBA UNIT	A1APUM1F-001

DIGITAL ASSEMBLY

Ref. No.	Description	Part No.
	DIGITAL ASSEMBLY Consists of the following:	A1APUMMZ-002
	DIGITAL MAIN CBA UNIT FUNCTION CBA UNIT IR SENSOR CBA UNIT	A1APUMMZ-002-DM A1APUMMZ-002-FN A1APUMMZ-002-IR