SAMSUNG PROPRIETARY
THIS DOCUMENT CONTAINS CONFIDENTIAL
PROPRIETARY INFORMATION THAT IS
SAMSUNG ELECTRONIS CO'S PROPRIETARY.
DO NOT DISCLOSE TO OR DUPLICATE FOR OTHERS
EXCEPT AS AUTHORIZED BY SAMSUNG.
Comply with the threshold of substances
which are specified in 0QA-2049

BLOCK NAME: high_x14h_eu
BLK PAGE NO.: 1 OF 18

X14H EU(2 TUNER)
BOARD SCHEMATIC

SCHEMATICS INDEX

01_COVER SHEET
02_STANDBY / MAIN POWER
03_STANDBY / MAIN POWER
04_SOUND AMP / SCART AMP / HEADPHONE, MONITOR OUT SPIDF / POP NOISE SOLUTION / DVI SOUND
05_SCART / COMPONENT / VIDEO
06_X14H HDMI / HDMI INPUT(HDMI 1 / 2)
07_HDMI INPUT(HDMI 3 / 4)
08_TUNER
09_X14H CVBS / TUNER / TS / JTAG
10_X14H GPIO / MODE SELECT / MAIN EEPROM / DEBUG
11_X14H POWER / GND
12_X14H DDR / DDR3 MEMORY
13_SUB MICOM / FUNCTION / DEBUG PORT
14_X14H CI / NAND / SPI FLASH
15_X14H LVDS / AUDIO / LAN
16_X14H USB / USB(1 / 2 / 3) / WIFI
17_PCMCIA
18_IR BLASTER

<LOCATION SUFFIX>

_FB : FAST BOOT
_NFB : NON FAST BOOT

_SHP : SHARP PANEL
_NSHP : NON SHARP PANEL

_75 : 75 INCH
_N75 : NON 75 INCH

_WF : WOOFER
_NWF : NON WOOFER

_IRB : IR BLASTER
_NIRB : NON IR BLASTER

_7K : 7K SERIES
_N7K : NON 7K SERIES

_VESA : VESA
_JEIDA : JEIDA

_HD : HD
_FHD : FHD

_HN : HALF NIM
_FN : FULL NIM
_DN : DUAL NIM
_DS : SATELLITE

_HP : HEADPHONE
_MO : MONITOR OUT
_HM : HEADPHONE & MO OUT

_FRC : FRC MODEL
_NFRC : NON FRC MODEL

_U1 / U2 / U3 / U23 : USB 1 / 2 / 3 /23_COMMON
_H1 / H2 / H3 / H4 : HDMI 1 / 2 / 3 / 4

_3DIM : 3 DIMMING
_1DIM : 1 DIMMING

_SC : SCART
_CI : CI
_LB : LOOPBACK
_BOOT : BOOT OPTION
_LAN : LAN
Z : DELETE

_WIFI : WIFI
_ARC : ARC
_3D : 3D
_DB : DEBUG

_60HZ : 60HZ
_120HZ : 120HZ

_1G : DDR 1G
_125G : DDR 1G + 256M

SCHEMATICS INDEX

LAYER 1 ----- TOP (SIGNAL1)
LAYER 2 ----- INNER 1 (GND)
LAYER 3 ----- INNER 2 (POWER)
LAYER 4 ----- BOTTOM (SIGNAL2)

PROJECT NAME: high_x14h_eu		A2	DRAWN BY: Unknown
			CHECKED BY: Unknown
SAMSUNG	DEV.STEP: Unknown	REV.: 1.0	APPROVED BY: Unknown
LAST EDITED TIME: Sat Nov 09 18:04:30 2013			TOTAL PAGE NO.: 1 OF 18

SAMSUNG PROPRIETARY
THIS DOCUMENT CONTAINS CONFIDENTIAL
PROPRIETARY INFORMATION THAT IS
SAMSUNG ELECTRONIS CO'S PROPRIETARY.
DO NOT DISCLOSE TO OR DUPLICATE FOR OTHERS
EXCEPT AS AUTHORIZED BY SAMSUNG.
Comply with the threshold of substances
which are specified in 0QA-2049

BLOCK NAME: high_x14h_eu
BLK PAGE NO.: 2 OF 18

02_STANDBY / MAIN POWER

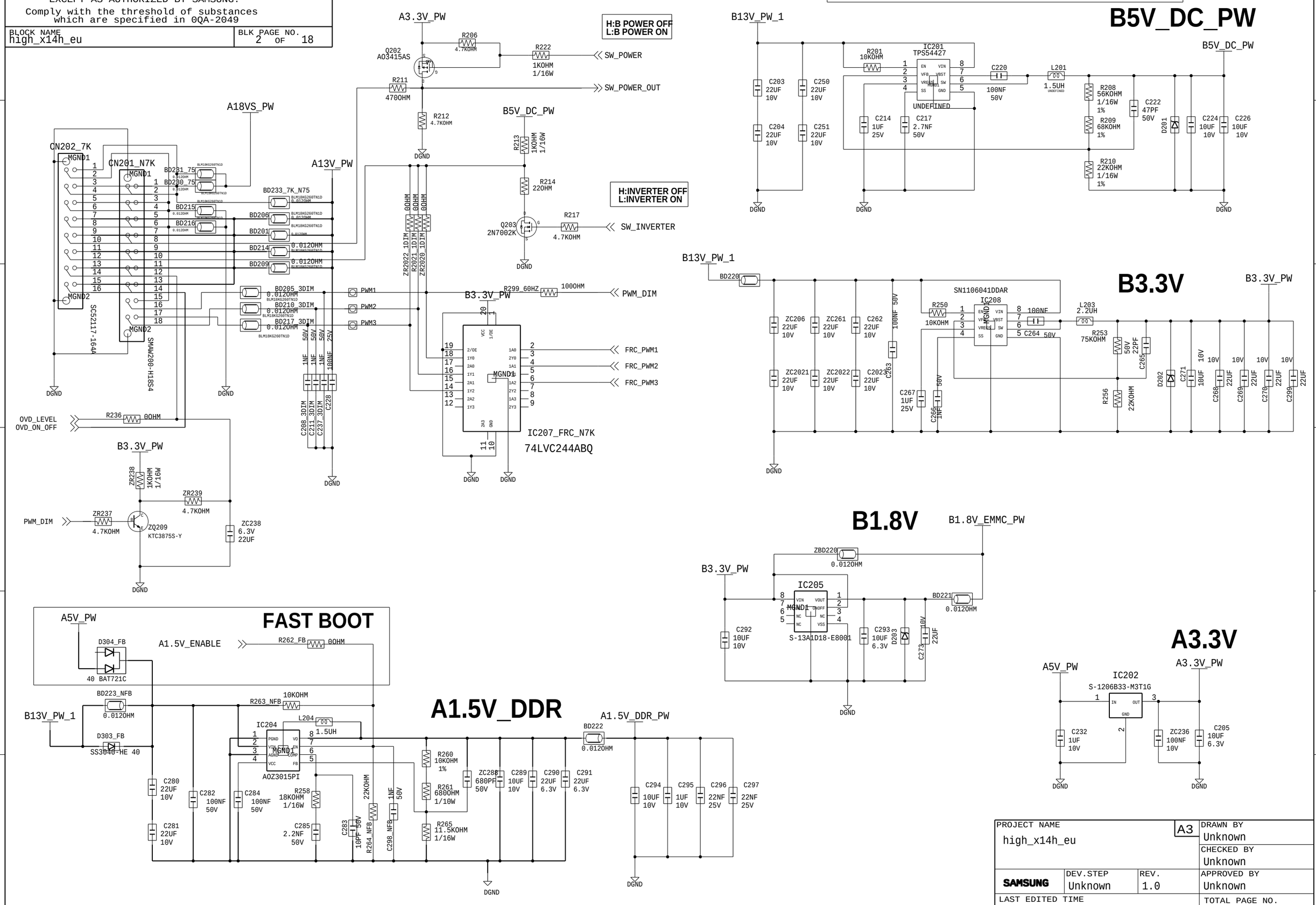

SAMSUNG PROPRIETARY
THIS DOCUMENT CONTAINS CONFIDENTIAL
PROPRIETARY INFORMATION THAT IS
SAMSUNG ELECTRONIS CO'S PROPRIETARY.
DO NOT DISCLOSE TO OR DUPLICATE FOR OTHERS
EXCEPT AS AUTHORIZED BY SAMSUNG.
Comply with the threshold of substances
which are specified in 0QA-2049

BLOCK NAME: high_x14h_eu
BLK PAGE NO.: 3 OF 18

03.STANDBY/MAIN POWER

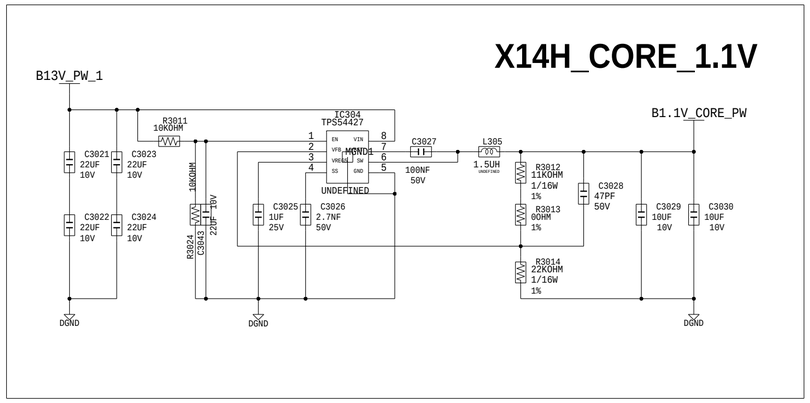

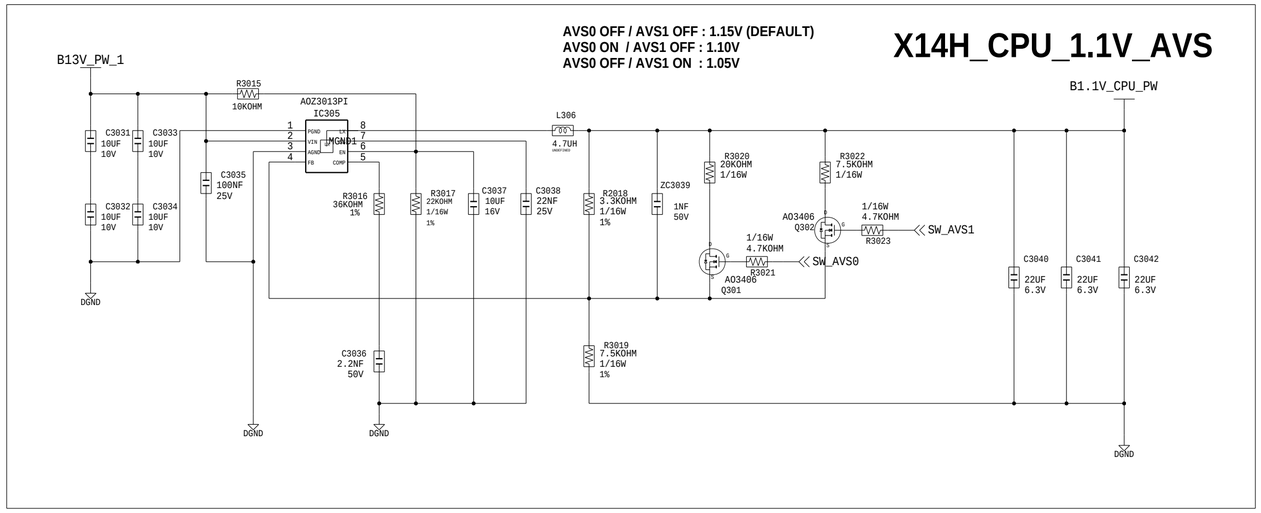

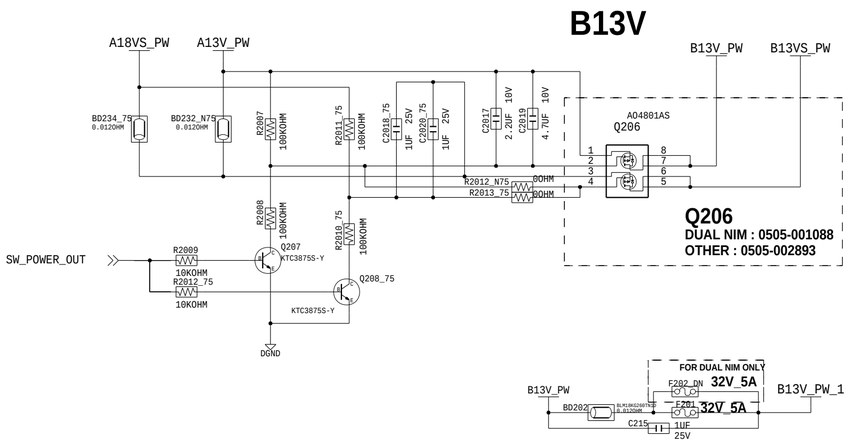

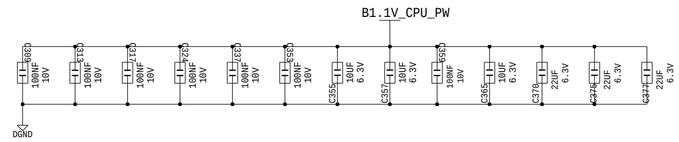

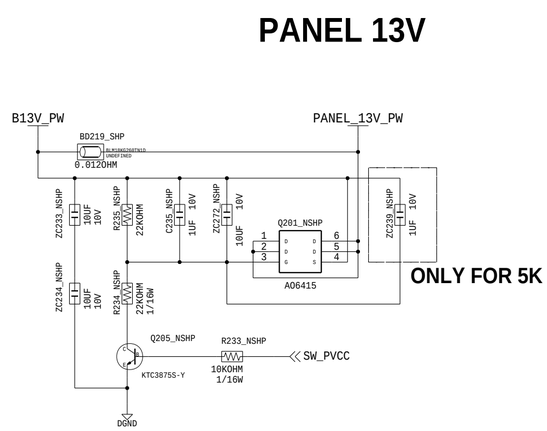

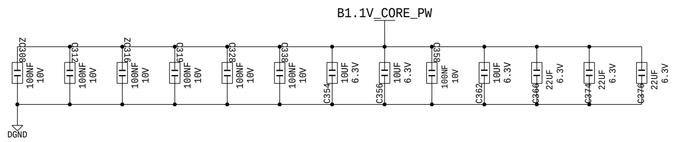

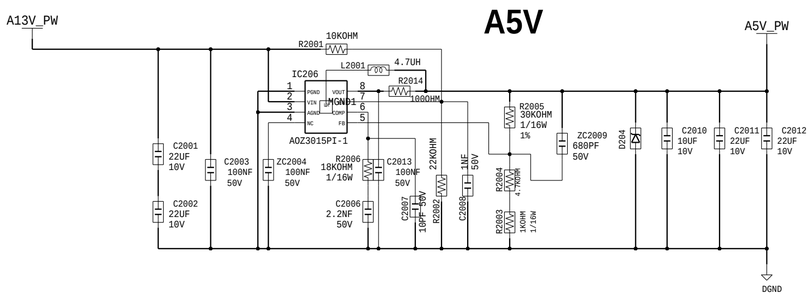

PROJECT NAME: high_x14h_eu		A2	DRAWN BY: Unknown
			CHECKED BY: Unknown
SAMSUNG	DEV.STEP: Unknown	REV.: 1.0	APPROVED BY: Unknown
LAST EDITED TIME: Fri Jan 17 18:25:58 2014			TOTAL PAGE NO.: 3 OF 18

D:/atdm/projects/high_x14h_eu\high_x14h_eu.cpm

SAMSUNG PROPRIETARY
THIS DOCUMENT CONTAINS CONFIDENTIAL
PROPRIETARY INFORMATION THAT IS
SAMSUNG ELECTRONIS CO'S PROPRIETARY.
DO NOT DISCLOSE TO OR DUPLICATE FOR OTHERS
EXCEPT AS AUTHORIZED BY SAMSUNG.
Comply with the threshold of substances
which are specified in 0QA-2049

BLOCK NAME: high_x14h_eu
BLK PAGE NO.: 4 OF 18

04_MAIN/WOOFER SOUND AMP / SCART SOUND AMP / OPTICAL / POP NOISE SOLUTION

POP NOISE SOLUTION

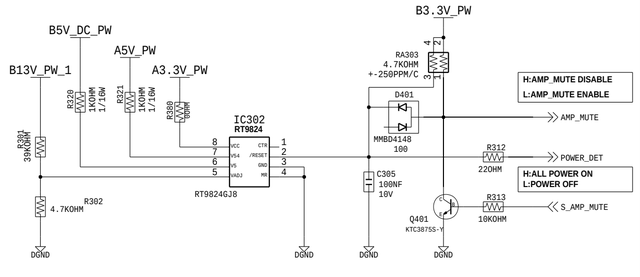

SPDIF OUT

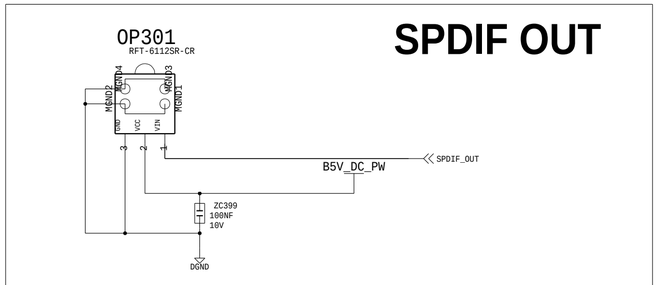

SCART SOUND AMP

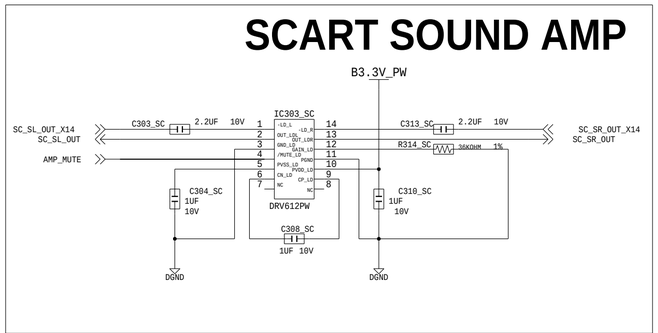

IR BLAST
HEADPHONE & LR OUT

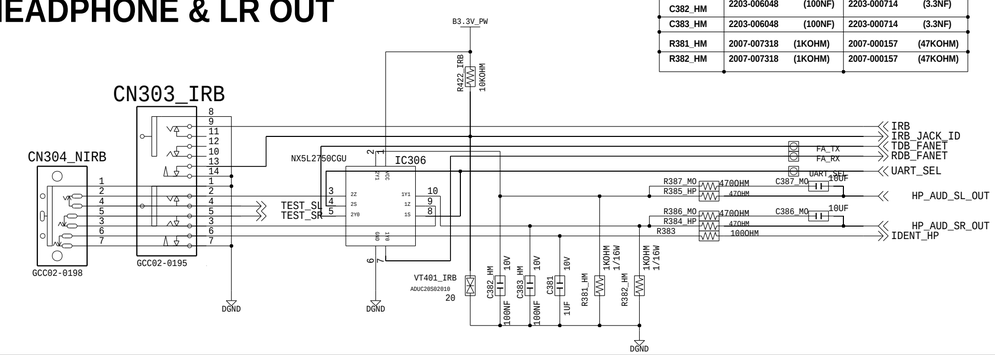

LOCATION	HEADPHONE		MONITOR LR OUT	
C382_HM	2203-006048	(100NF)	2203-000714	(3.3NF)
C383_HM	2203-006048	(100NF)	2203-000714	(3.3NF)
R381_HM	2007-007318	(1KOHM)	2007-000157	(47KOHM)
R382_HM	2007-007318	(1KOHM)	2007-000157	(47KOHM)

MAIN SOUND AMP

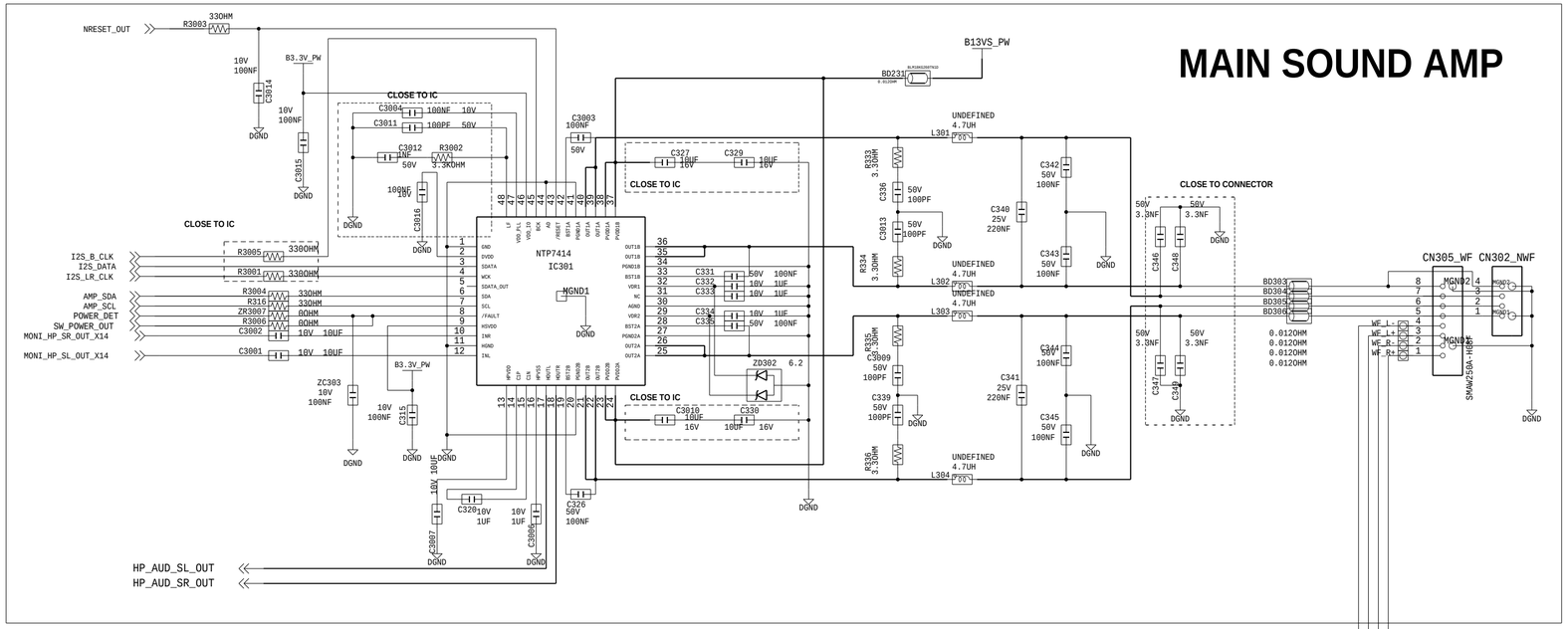

WOOFER SOUND AMP

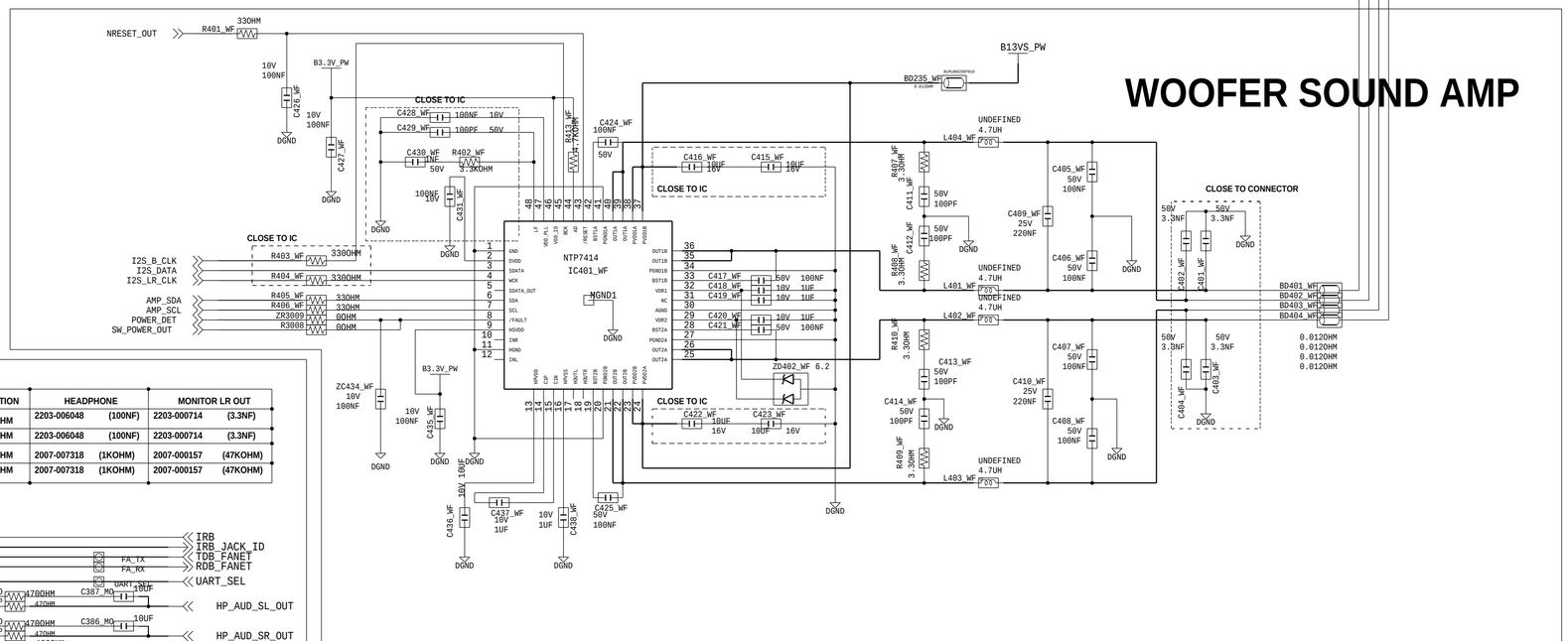

PROJECT NAME		A2	DRAWN BY
high_x14h_eu			Unknown
			CHECKED BY Unknown
SAMSUNG	DEV.STEP Unknown	REV. 1.0	APPROVED BY Unknown
LAST EDITED TIME Fri Jan 17 18:25:49 2014			TOTAL PAGE NO. 4 OF 18

SAMSUNG PROPRIETARY
THIS DOCUMENT CONTAINS CONFIDENTIAL
PROPRIETARY INFORMATION THAT IS
SAMSUNG ELECTRONIS CO'S PROPRIETARY.
DO NOT DISCLOSE TO OR DUPLICATE FOR OTHERS
EXCEPT AS AUTHORIZED BY SAMSUNG.
Comply with the threshold of substances
which are specified in 0QA-2049

BLOCK NAME: high_x14h_eu
BLK PAGE NO.: 5 OF 18

05_SCART / COMPONENT / VIDEO

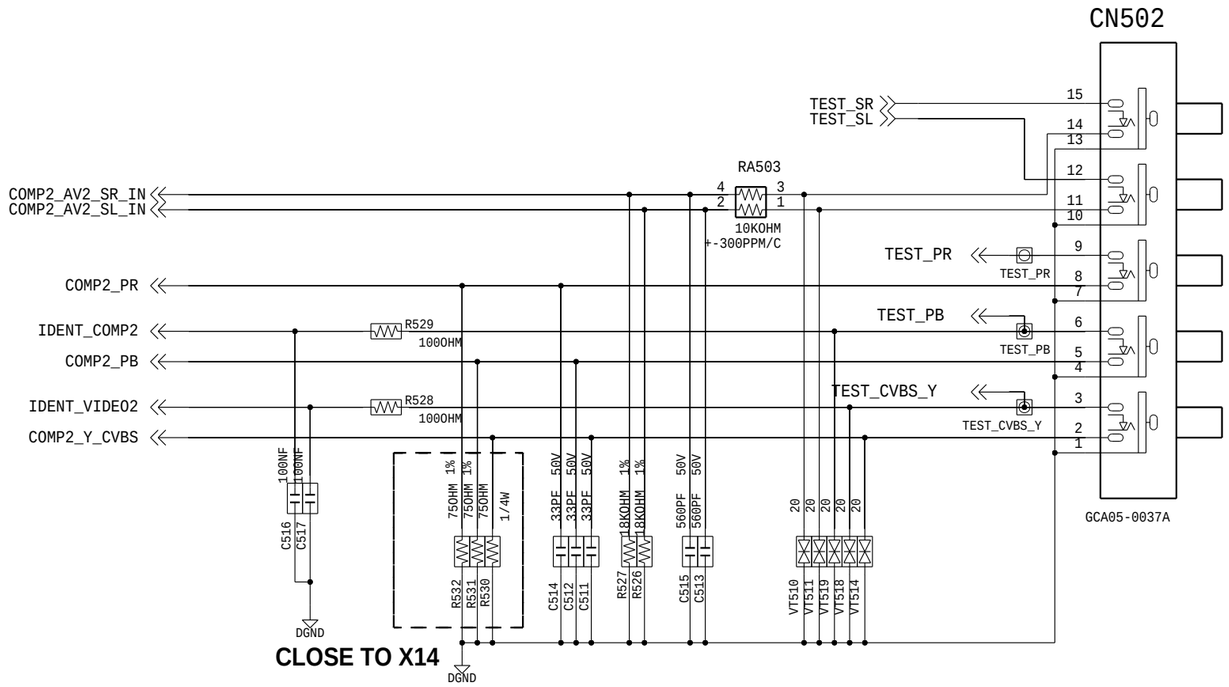

AV/COMP LOOPBACK TP

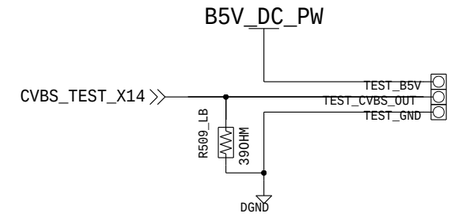

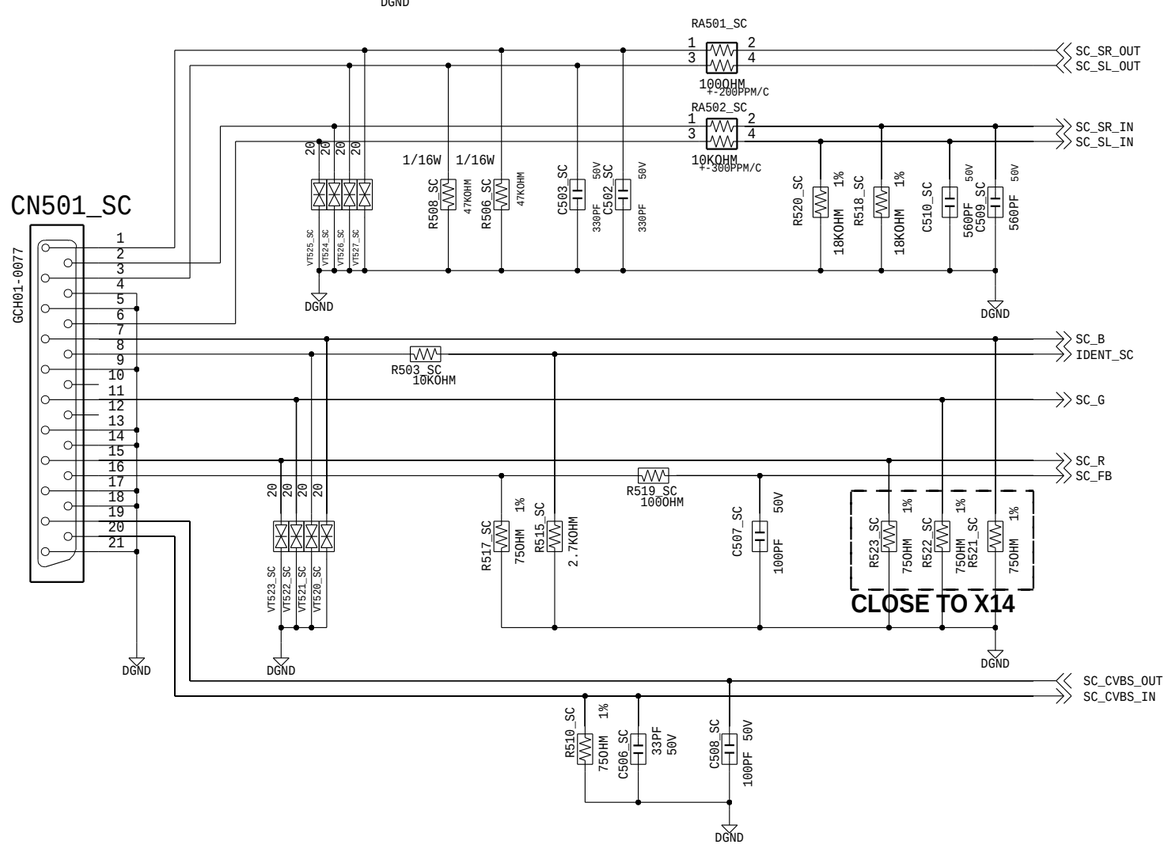

PROJECT NAME: high_x14h_eu		A3	DRAWN BY: Unknown
			CHECKED BY: Unknown
SAMSUNG	DEV.STEP: Unknown	REV.: 1.0	APPROVED BY: Unknown
LAST EDITED TIME: Fri Jan 17 18:25:45 2014			TOTAL PAGE NO.: 5 OF 18

SAMSUNG PROPRIETARY
THIS DOCUMENT CONTAINS CONFIDENTIAL
PROPRIETARY INFORMATION THAT IS
SAMSUNG ELECTRONIS CO'S PROPRIETARY.
DO NOT DISCLOSE TO OR DUPLICATE FOR OTHERS
EXCEPT AS AUTHORIZED BY SAMSUNG.
Comply with the threshold of substances
which are specified in 0QA-2049

BLOCK NAME: high_x14h_eu
BLK PAGE NO.: 6 OF 18

6. HDMI

HDMI

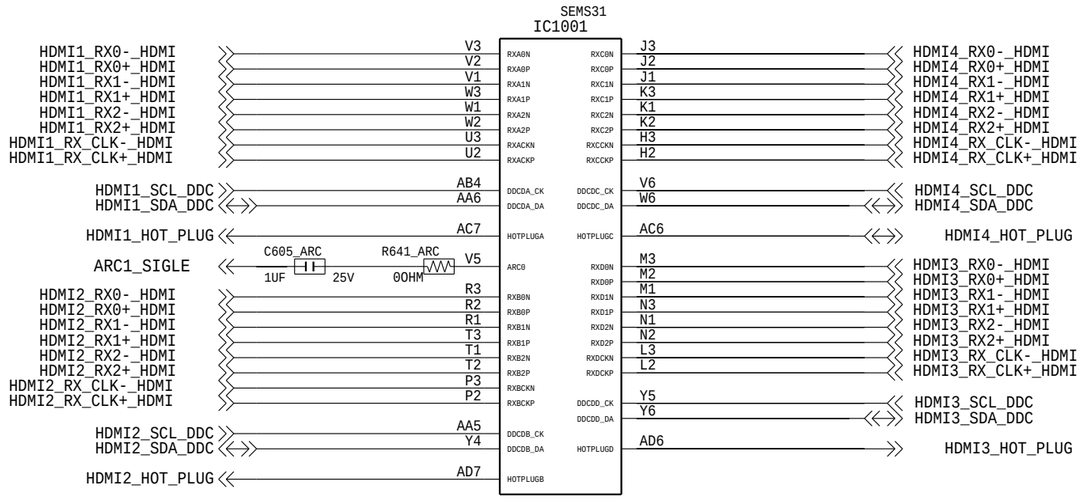

HDMI INPUT2 (ARC)

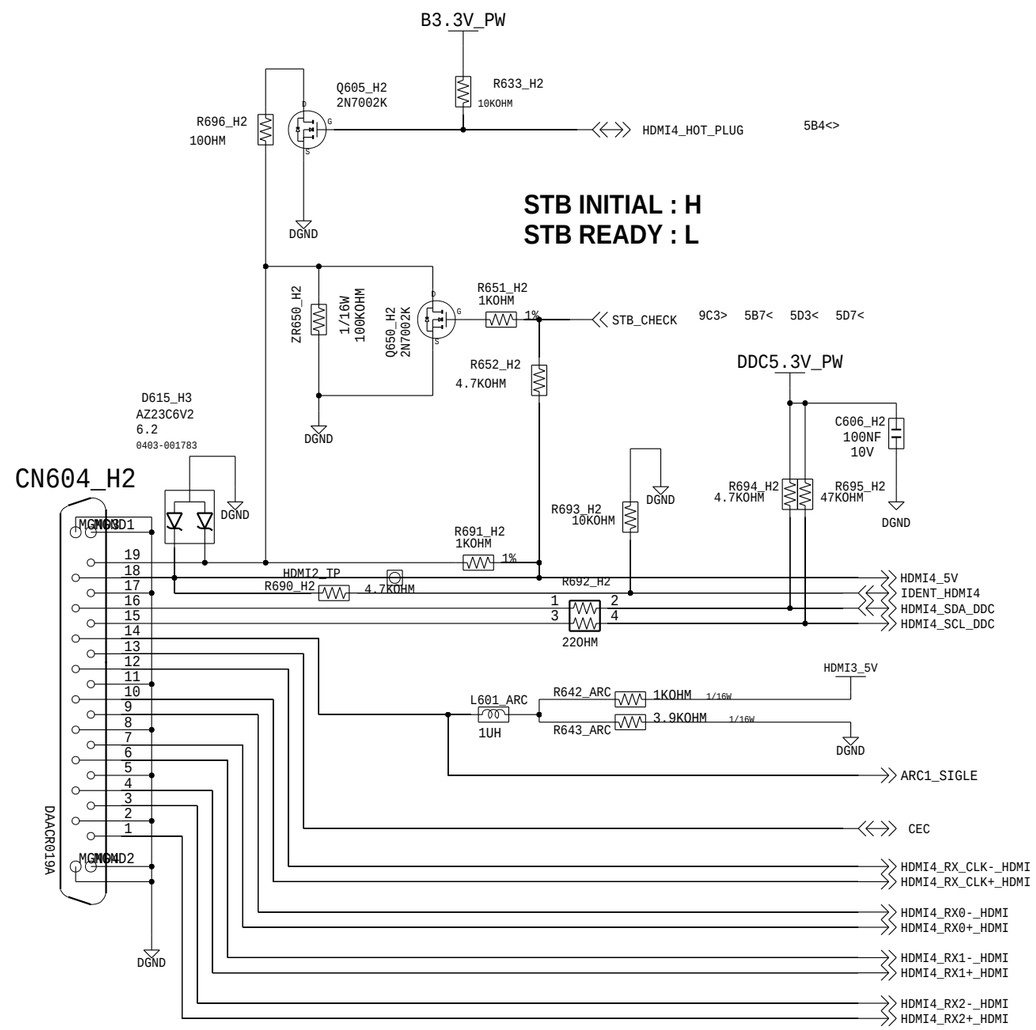

HDMI INPUT1 (STB)

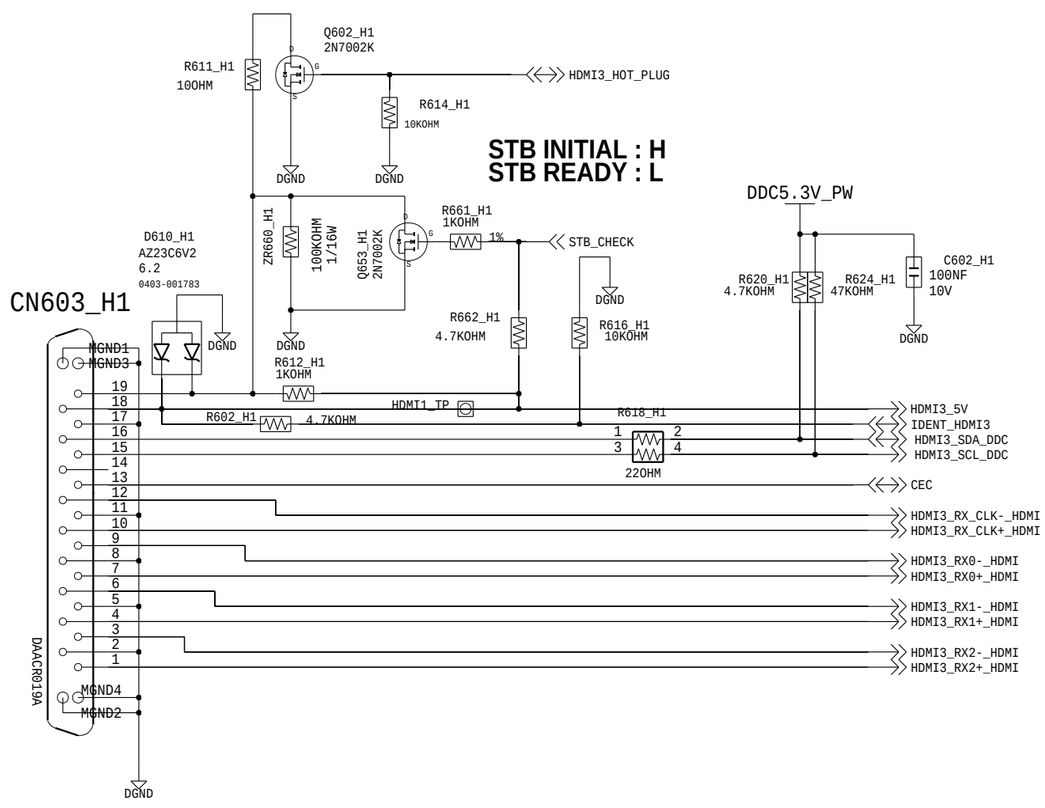

PROJECT NAME: high_x14h_eu	A3		DRAWN BY: Unknown
			CHECKED BY: Unknown
SAMSUNG	DEV.STEP: Unknown	REV.: 1.0	APPROVED BY: Unknown
LAST EDITED TIME: Fri Jan 17 18:25:51 2014			TOTAL PAGE NO.: 6 OF 18

SAMSUNG PROPRIETARY
THIS DOCUMENT CONTAINS CONFIDENTIAL
PROPRIETARY INFORMATION THAT IS
SAMSUNG ELECTRONIS CO'S PROPRIETARY.
DO NOT DISCLOSE TO OR DUPLICATE FOR OTHERS
EXCEPT AS AUTHORIZED BY SAMSUNG.
Comply with the threshold of substances
which are specified in 0QA-2049

BLOCK NAME: high_x14h_eu
BLK PAGE NO.: 7 OF 18

7. HDMI

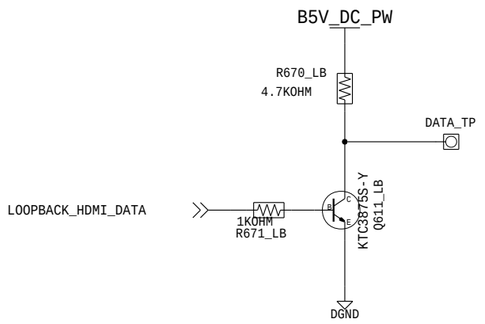

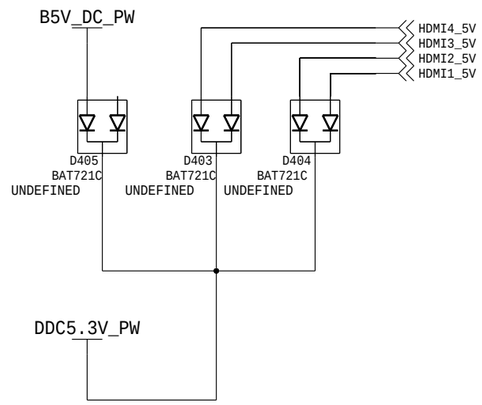

HDMI INPUT3

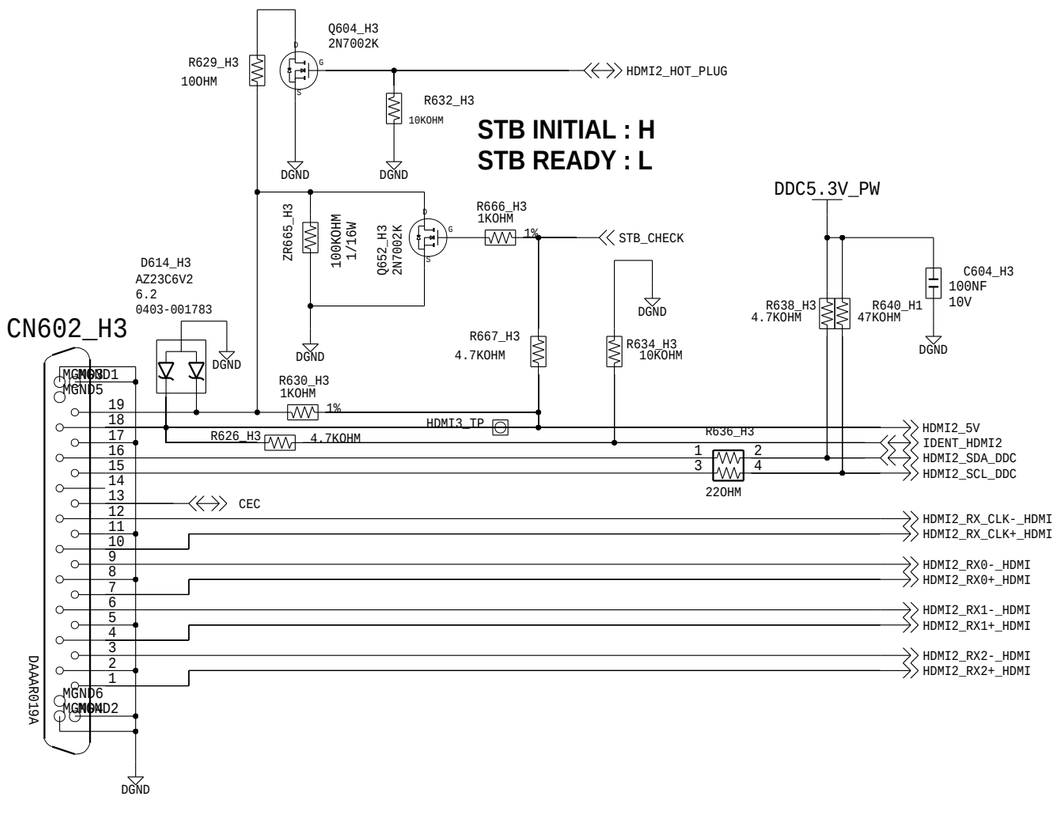

HDMI INPUT4 (DVI)

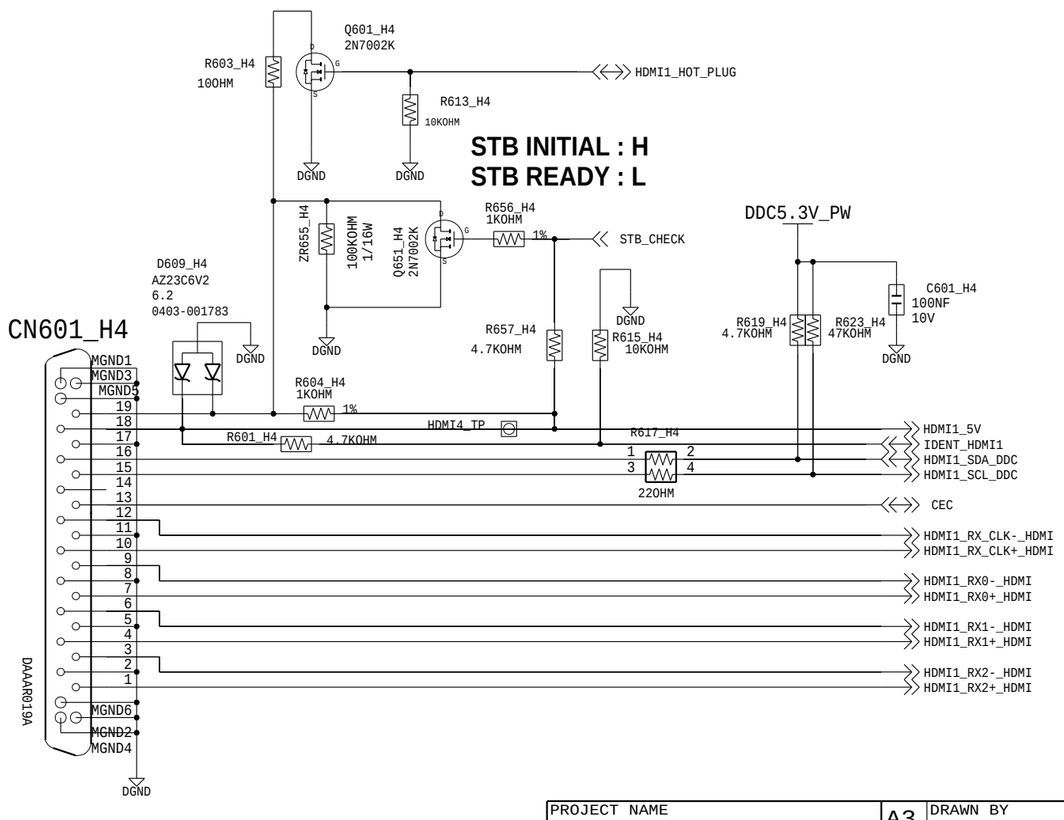

PROJECT NAME: high_x14h_eu	A3		DRAWN BY: Unknown
			CHECKED BY: Unknown
SAMSUNG	DEV.STEP: Unknown	REV.: 1.0	APPROVED BY: Unknown
LAST EDITED TIME: Fri Jan 17 18:25:52 2014			TOTAL PAGE NO.: 7 OF 18

SAMSUNG PROPRIETARY
THIS DOCUMENT CONTAINS CONFIDENTIAL
PROPRIETARY INFORMATION THAT IS
SAMSUNG ELECTRONIS CO'S PROPRIETARY.
DO NOT DISCLOSE TO OR DUPLICATE FOR OTHERS
EXCEPT AS AUTHORIZED BY SAMSUNG.
Comply with the threshold of substances
which are specified in 0QA-2049

BLOCK NAME: high_x14h_eu
BLK PAGE NO.: 8 OF 18

08_TUNER

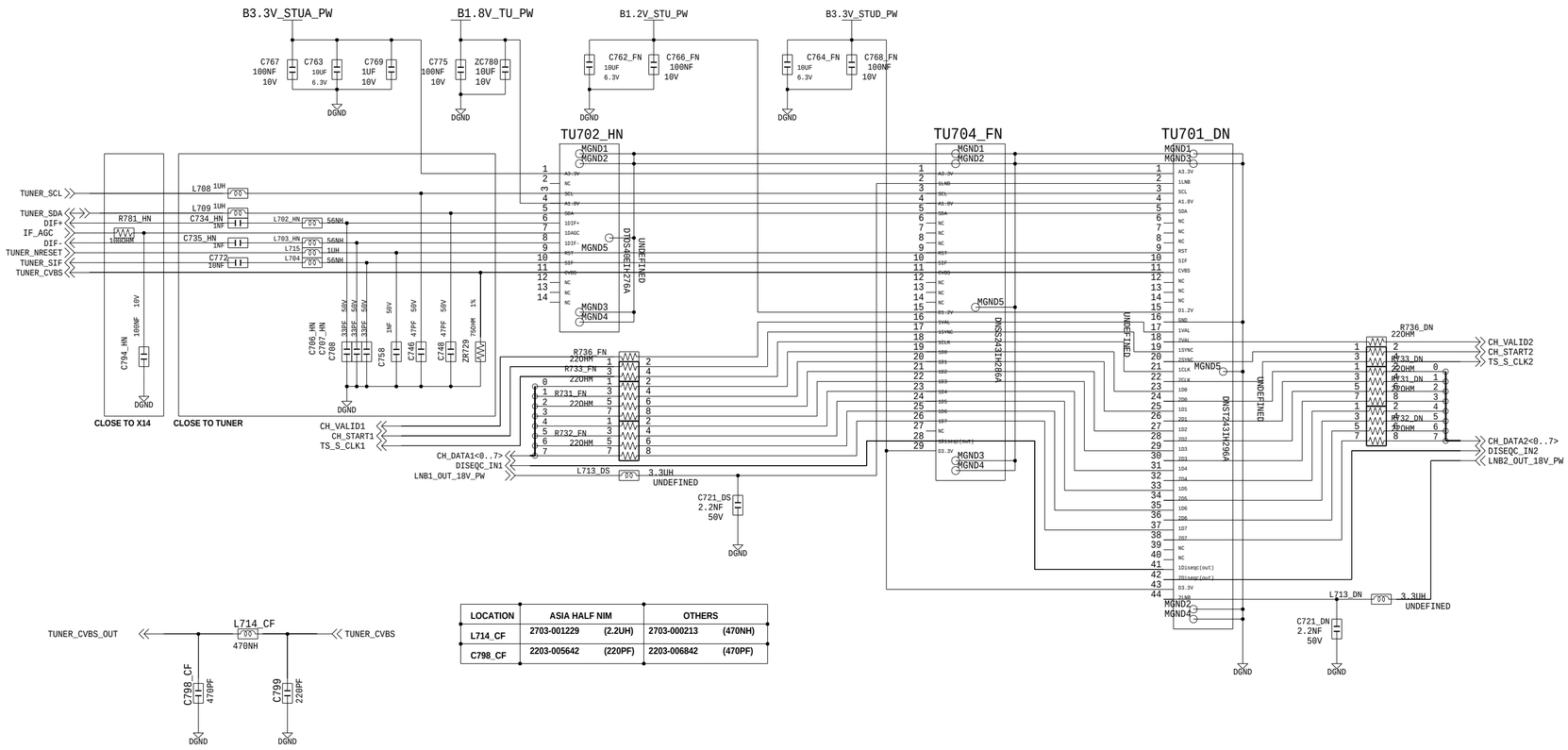

LOCATION	ASIA HALF NIM		OTHERS	
L714_CF	2703-001229	(2.2UH)	2703-000213	(470NH)
C798_CF	2203-005642	(220PF)	2203-006842	(470PF)

TS_CLK_BUFFER

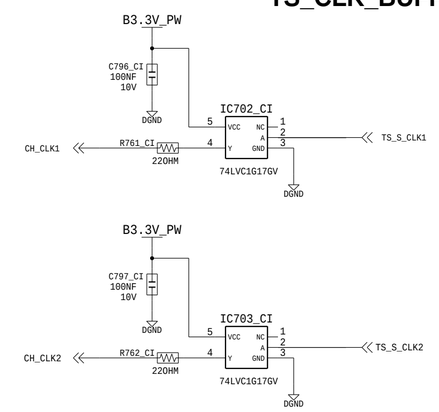

TUNER_POWER

CLOSE TO TUNER

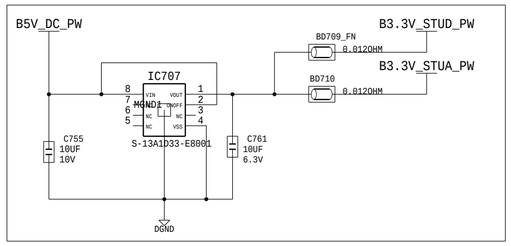

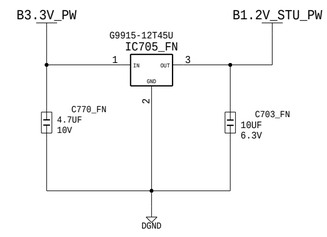

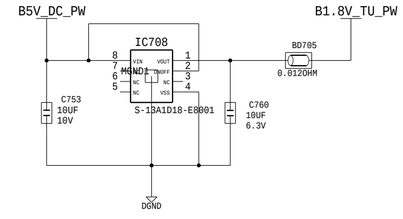

DISEQC 2.0

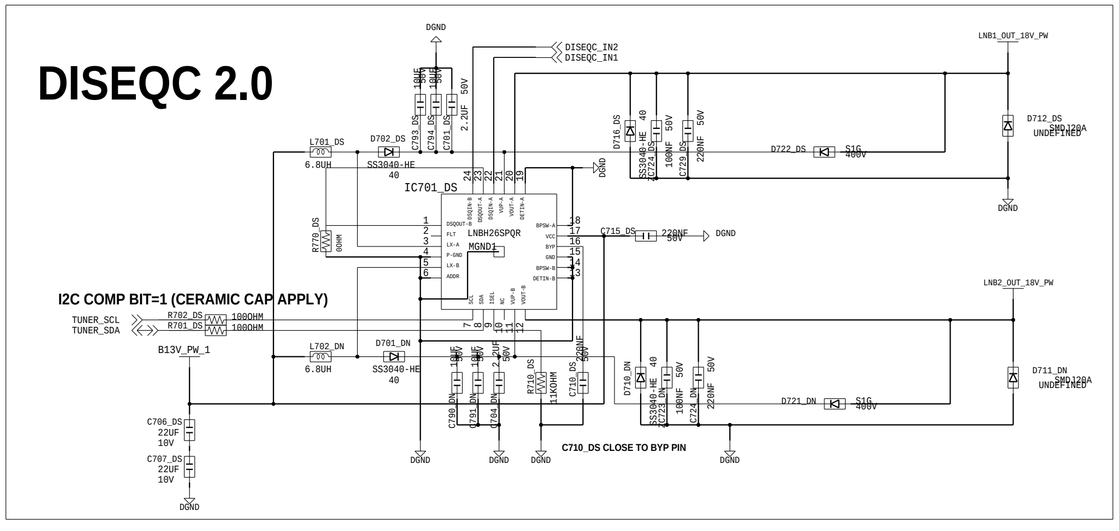

PROJECT NAME: high_x14h_eu
A2
DRAWN BY: Unknown
CHECKED BY: Unknown
APPROVED BY: Unknown
SAMSUNG
DEV.STEP: Unknown
REV.: 1.0
LAST EDITED TIME: Fri Jan 17 18:25:33 2014
TOTAL PAGE NO.: 8 OF 18

SAMSUNG PROPRIETARY
THIS DOCUMENT CONTAINS CONFIDENTIAL
PROPRIETARY INFORMATION THAT IS
SAMSUNG ELECTRONIS CO'S PROPRIETARY.
DO NOT DISCLOSE TO OR DUPLICATE FOR OTHERS
EXCEPT AS AUTHORIZED BY SAMSUNG.
Comply with the threshold of substances
which are specified in 0QA-2049

BLOCK NAME: high_x14h_eu
BLK PAGE NO.: 9 OF 18

09_ X14H CVBS / TUNER / TS / JTAG

CVBS

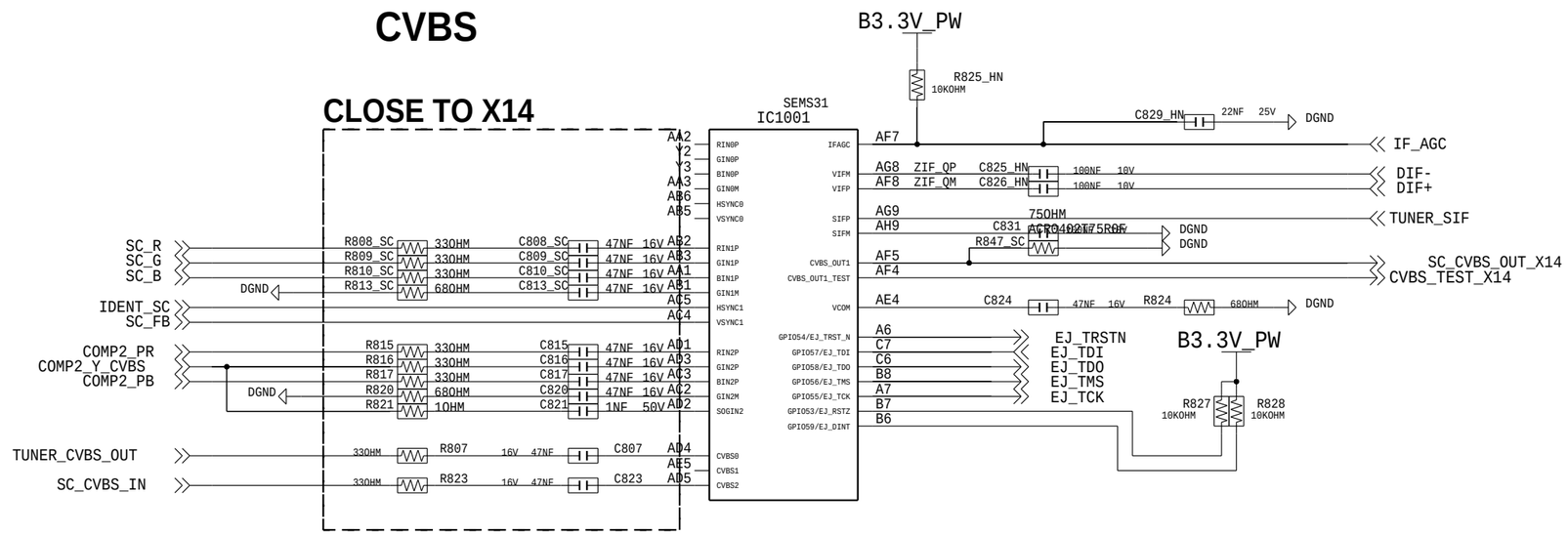

ARM_JTAG

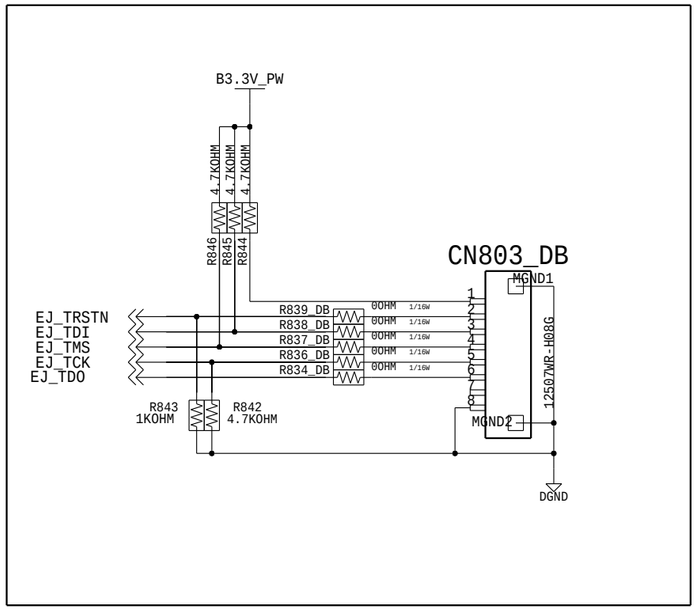

TS

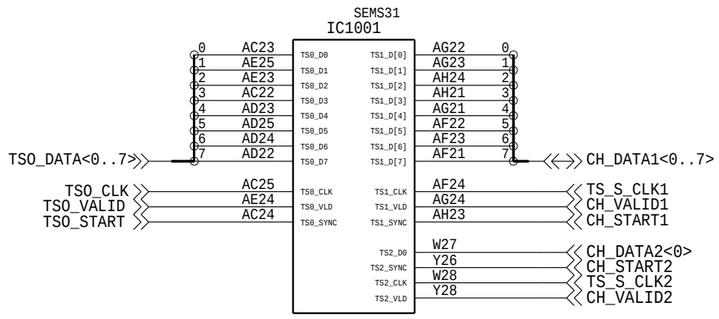

PROJECT NAME: high_x14h_eu		A3	DRAWN BY: Unknown
			CHECKED BY: Unknown
SAMSUNG	DEV.STEP: Unknown	REV.: 1.0	APPROVED BY: Unknown
LAST EDITED TIME: Fri Jan 17 18:25:44 2014			TOTAL PAGE NO.: 9 OF 18

D:/atdm/projects/high_x14h_eu\high_x14h_eu.cpm

SAMSUNG PROPRIETARY
THIS DOCUMENT CONTAINS CONFIDENTIAL
PROPRIETARY INFORMATION THAT IS
SAMSUNG ELECTRONIS CO'S PROPRIETARY.
DO NOT DISCLOSE TO OR DUPLICATE FOR OTHERS
EXCEPT AS AUTHORIZED BY SAMSUNG.
Comply with the threshold of substances
which are specified in 0QA-2049

BLOCK NAME: high_x14h_eu
BLK PAGE NO.: 10 OF 18

10_X14H GPIO / MODE SELECT MAIN EEPROM / DEBUG

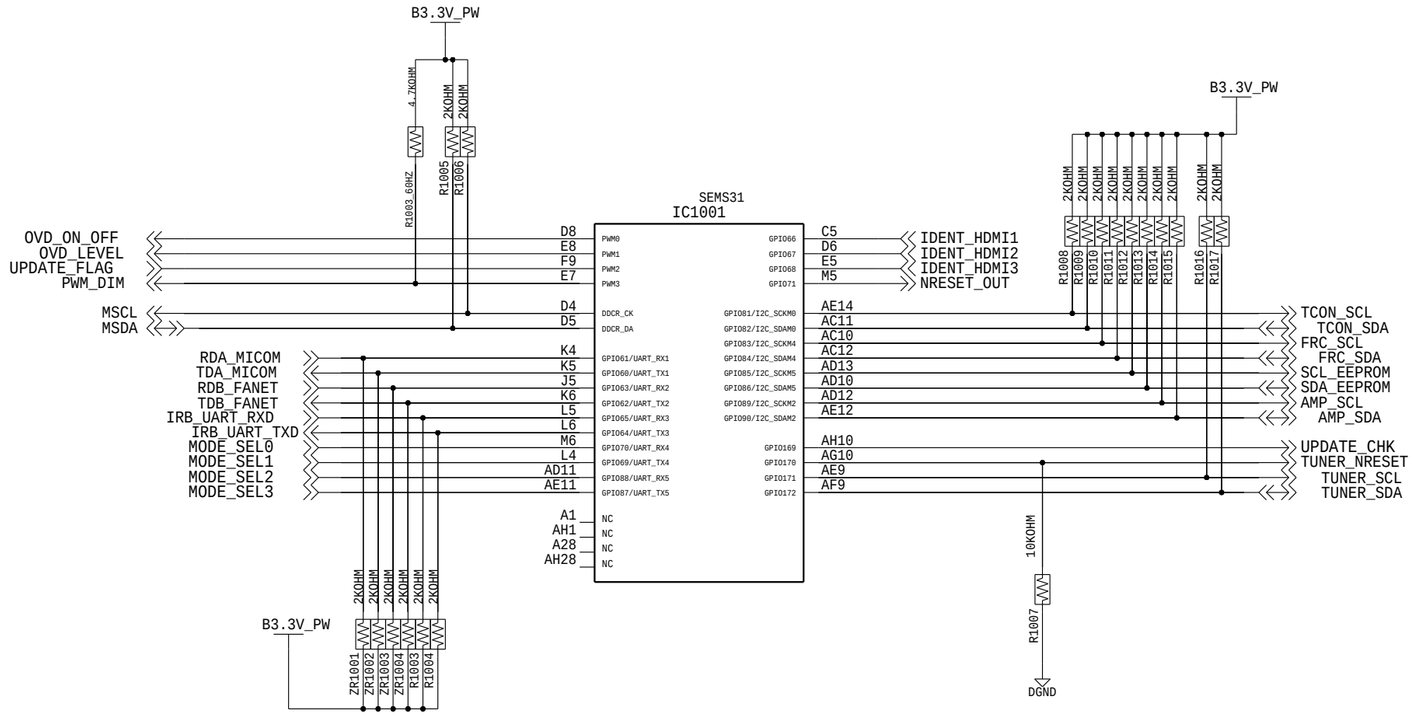

SELECT 60HZ/120HZ

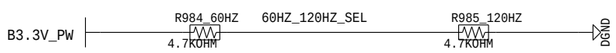

PULL UP : 60HZ
PULL DOWN : 120HZ

MODE_SEL

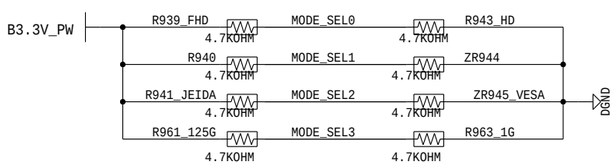

EEPROM

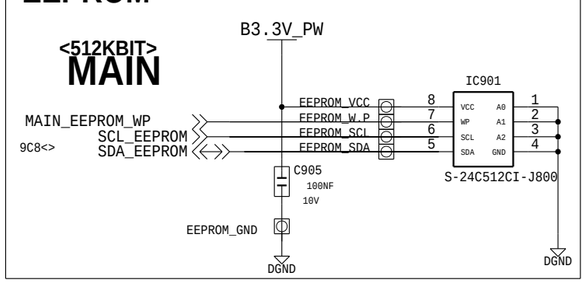

DEBUG

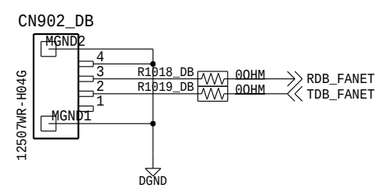

DUMMY TP

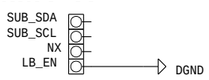

MSTAR CHIP DEBUG

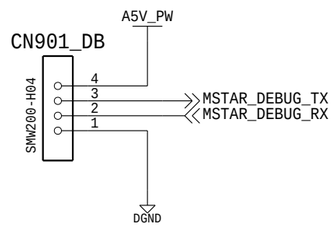

BOOTSTRAP

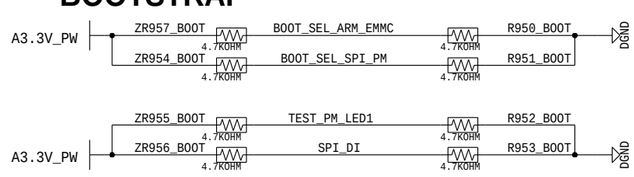

BOOT_SEL_ARM_EMMC / BOOT_SEL_SPI_PM

00 PM BOOT FROM SPI
01 ARM BOOT FROM SPI
10 ARM BOOT FROM ROM, EMMC
11 ARM BOOT FROM ROM, NAND

TEST_PM_LED1 / SPI_DI

00 NORMAL OPERATING
11 ONLY TEST

PROJECT NAME: high_x14h_eu	A3		DRAWN BY: Unknown
			CHECKED BY: Unknown
SAMSUNG	DEV.STEP: Unknown	REV.: 1.0	APPROVED BY: Unknown
LAST EDITED TIME: Fri Jan 17 18:26:01 2014			TOTAL PAGE NO.: 10 OF 18

SAMSUNG PROPRIETARY
THIS DOCUMENT CONTAINS CONFIDENTIAL
PROPRIETARY INFORMATION THAT IS
SAMSUNG ELECTRONIS CO'S PROPRIETARY.
DO NOT DISCLOSE TO OR DUPLICATE FOR OTHERS
EXCEPT AS AUTHORIZED BY SAMSUNG.
Comply with the threshold of substances
which are specified in 0QA-2049

BLOCK NAME: high_x14h_eu
BLK PAGE NO.: 11 OF 18

11_X14H POWER / GND

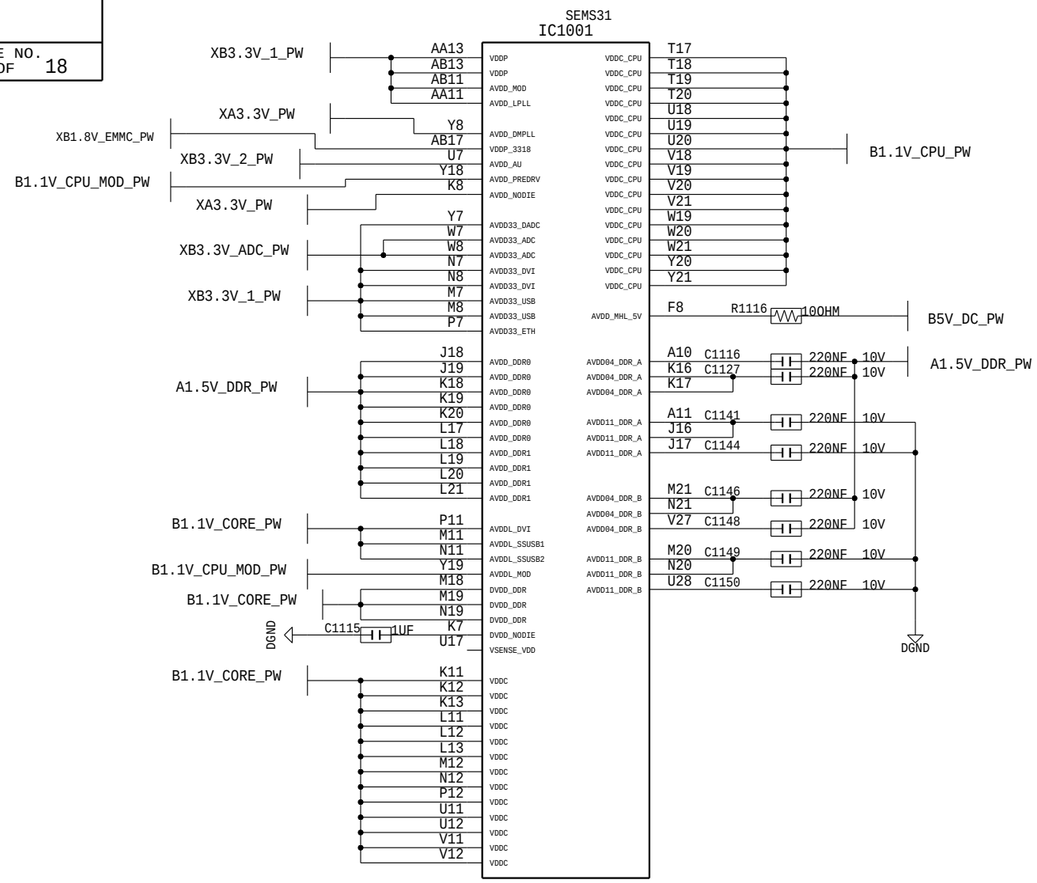

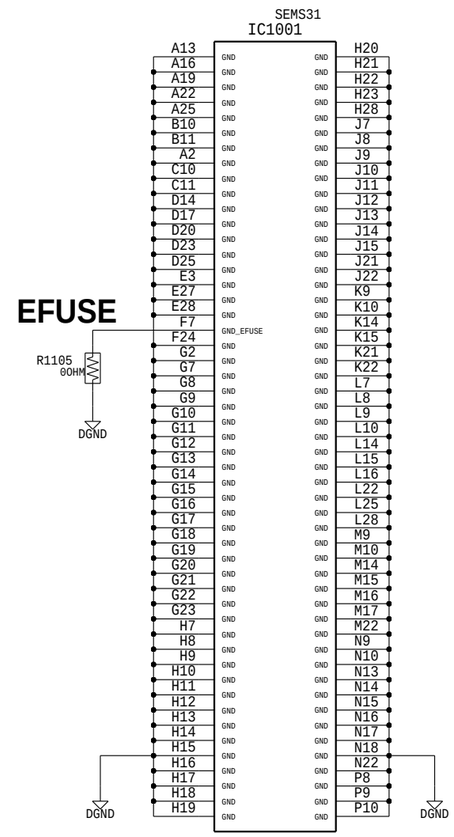

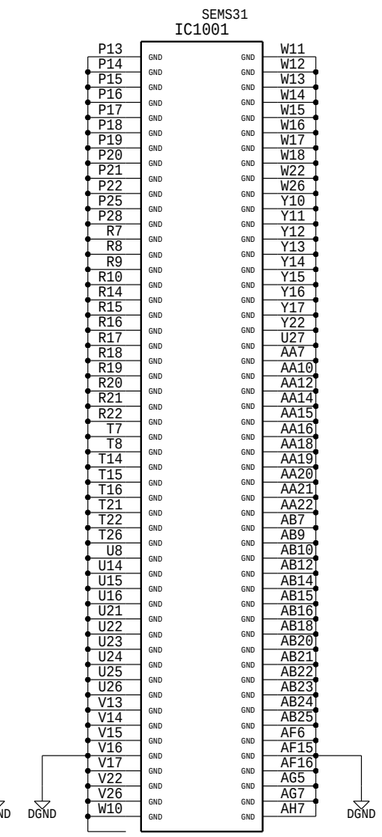

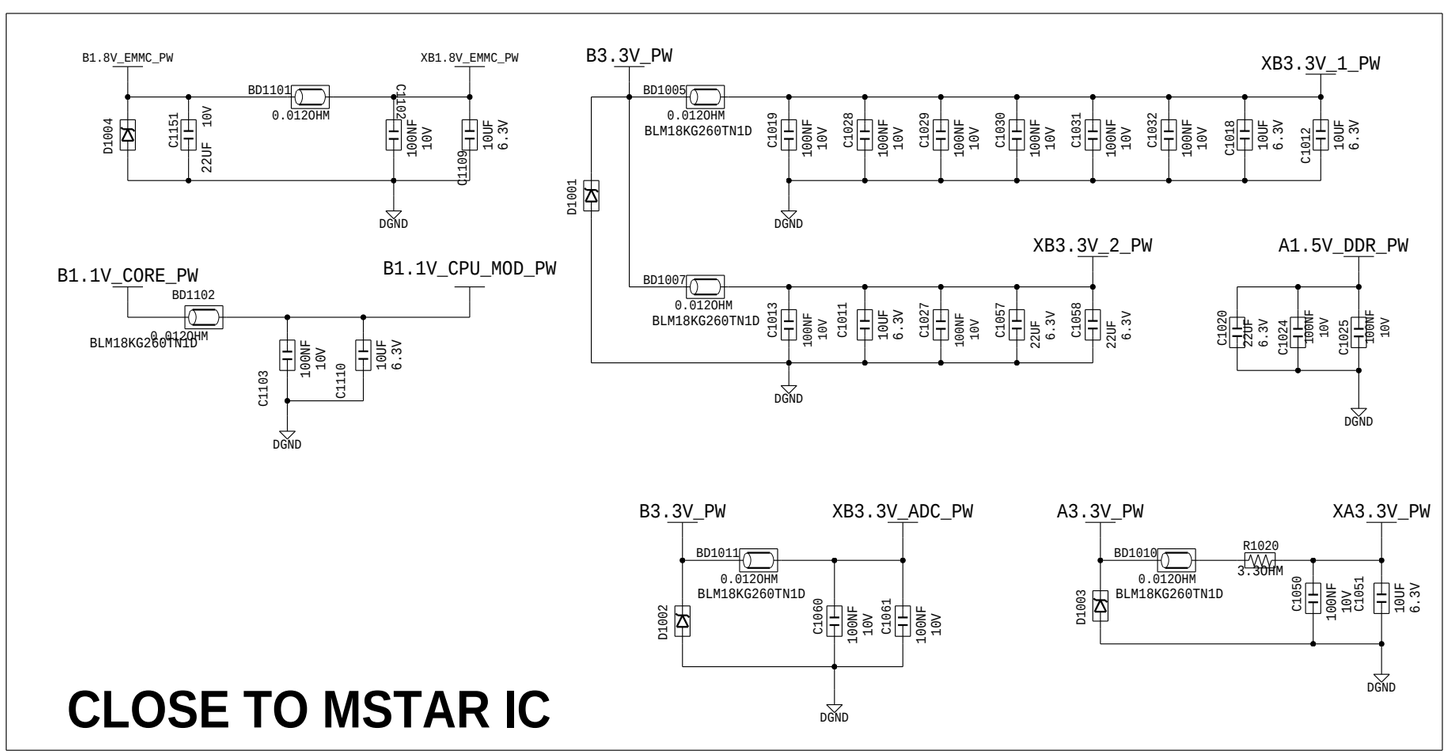

CLOSE TO MSTAR IC

PROJECT NAME: high_x14h_eu		A3	DRAWN BY: Unknown
			CHECKED BY: Unknown
SAMSUNG	DEV.STEP: Unknown	REV.: 1.0	APPROVED BY: Unknown
LAST EDITED TIME: Fri Jan 17 18:25:53 2014			TOTAL PAGE NO.: 11 OF 18

SAMSUNG PROPRIETARY
THIS DOCUMENT CONTAINS CONFIDENTIAL
PROPRIETARY INFORMATION THAT IS
SAMSUNG ELECTRONIS CO'S PROPRIETARY.
DO NOT DISCLOSE TO OR DUPLICATE FOR OTHERS
EXCEPT AS AUTHORIZED BY SAMSUNG.
Comply with the threshold of substances
which are specified in 0QA-2049

BLOCK NAME: high_x14h_eu
BLK PAGE NO.: 12 OF 18

12_X14H DDR / DDR3 MEMORY

DDR

SEMS31
IC1001

DDR3_A_X14_ADDR0	E15	L23	DDR3_B_X14_ADDR0
DDR3_A_X14_ADDR1	A14	J27	DDR3_B_X14_ADDR1
DDR3_A_X14_ADDR2	F14	H24	DDR3_B_X14_ADDR2
DDR3_A_X14_ADDR3	E16	G24	DDR3_B_X14_ADDR3
DDR3_A_X14_ADDR4	B14	K26	DDR3_B_X14_ADDR4
DDR3_A_X14_ADDR5	F15	H25	DDR3_B_X14_ADDR5
DDR3_A_X14_ADDR6	C13	J28	DDR3_B_X14_ADDR6
DDR3_A_X14_ADDR7	E14	K23	DDR3_B_X14_ADDR7
DDR3_A_X14_ADDR8	C12	J26	DDR3_B_X14_ADDR8
DDR3_A_X14_ADDR9	F13	J24	DDR3_B_X14_ADDR9
DDR3_A_X14_ADDR10	B15	F27	DDR3_B_X14_ADDR10
DDR3_A_X14_ADDR11	B13	H27	DDR3_B_X14_ADDR11
DDR3_A_X14_ADDR12	E17	G27	DDR3_B_X14_ADDR12
DDR3_A_X14_ADDR13	D12	J25	DDR3_B_X14_ADDR13
DDR3_A_X14_ADDR14	B12	H26	DDR3_B_X14_ADDR14
DDR3_A_X14_ADDR15	F17	G26	DDR3_B_X14_ADDR15
DDR3_A_X14_DQ0	A20	T23	DDR3_B_X14_DQ0
DDR3_A_X14_DQ1	B18	M25	DDR3_B_X14_DQ1
DDR3_A_X14_DQ2	B20	R24	DDR3_B_X14_DQ2
DDR3_A_X14_DQ3	C17	N24	DDR3_B_X14_DQ3
DDR3_A_X14_DQ4	B21	T24	DDR3_B_X14_DQ4
DDR3_A_X14_DQ5	A17	N23	DDR3_B_X14_DQ5
DDR3_A_X14_DQ6	C20	R25	DDR3_B_X14_DQ6
DDR3_A_X14_DQ7	C18	M24	DDR3_B_X14_DQ7
DDR3_A_X14_DQ8	F20	N27	DDR3_B_X14_DQ8
DDR3_A_X14_DQ9	E22	R28	DDR3_B_X14_DQ9
DDR3_A_X14_DQ10	F19	M27	DDR3_B_X14_DQ10
DDR3_A_X14_DQ11	F23	T28	DDR3_B_X14_DQ11
DDR3_A_X14_DQ12	F21	N26	DDR3_B_X14_DQ12
DDR3_A_X14_DQ13	D24	T27	DDR3_B_X14_DQ13
DDR3_A_X14_DQ14	E20	M26	DDR3_B_X14_DQ14
DDR3_A_X14_DQ15	E23	R27	DDR3_B_X14_DQ15
DDR3_A_X14_BA0_ADDR	A23	G25	DDR3_B_X14_BA0_ADDR
DDR3_A_X14_BA1_ADDR	B25	K27	DDR3_B_X14_BA1_ADDR
DDR3_A_X14_BA2_ADDR	C22	K24	DDR3_B_X14_BA2_ADDR
DDR3_A_X14_DM0	C21	P24	DDR3_B_X14_DM0
DDR3_A_X14_DM1	C25	T25	DDR3_B_X14_DM1
DDR3_A_X14_DQS0	D26	R23	DDR3_B_X14+_DQS0
DDR3_A_X14_DQS1	C27	P23	DDR3_B_X14-_DQS0
DDR3_A_X14_DQS2	E24	P26	DDR3_B_X14+_DQS1
DDR3_A_X14_DQS3	D27	P27	DDR3_B_X14-_DQS1
DDR3_A_X14_DQ28	E26		
DDR3_A_X14_DQ29	D28	M28	DDR3_B_X14+_CLK
DDR3_A_X14_DQ30	E25	L27	DDR3_B_X14-_CLK
DDR3_A_X14_DQ31	C28		
DDR3_A_X14_BA0_ADDR	F16	M23	DDR3_B_X14_CASZ_ADDR
DDR3_A_X14_BA1_ADDR	C14	F28	DDR3_B_X14_RASZ_ADDR
DDR3_A_X14_BA2_ADDR	D15		
DDR3_A_X14_DM0	B17	L26	DDR3_B_X14_CKE_ADDR
DDR3_A_X14_DM1	F22	L24	DDR3_B_X14_WEZ_ADDR
DDR3_A_X14_DM2	B22	F26	DDR3_B_X14_ODT_ADDR
DDR3_A_X14_DM3	B27	J23	DDR3_B_X14_RESET_ADDR
DDR3_A_X14+_DQS0	C19	F25	DDR3_B_X14_CS0
DDR3_A_X14-_DQS0	B19		
DDR3_A_X14+_DQS1	D21		
DDR3_A_X14-_DQS1	E21		
DDR3_A_X14+_DQS2	B24		
DDR3_A_X14-_DQS2	C23		
DDR3_A_X14+_DQS3	B26		
DDR3_A_X14-_DQS3	C26		
DDR3_A_X14+_CLK	C16		
DDR3_A_X14-_CLK	B16		
DDR3_A_X14_CASZ_ADDR	E18		
DDR3_A_X14_RASZ_ADDR	E19		
DDR3_A_X14_CKE_ADDR	C15		
DDR3_A_X14_WEZ_ADDR	F18		
DDR3_A_X14_ODT_ADDR	D18		
DDR3_A_X14_RESET_ADDR	E13		
DDR3_A_X14_CS0	E12		
DDR3_A_X14_CS1	F12		

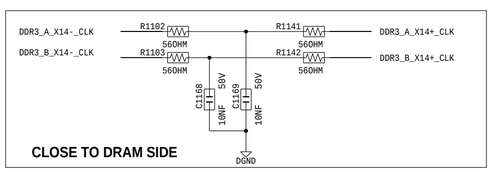

CLOSE TO DRAM SIDE

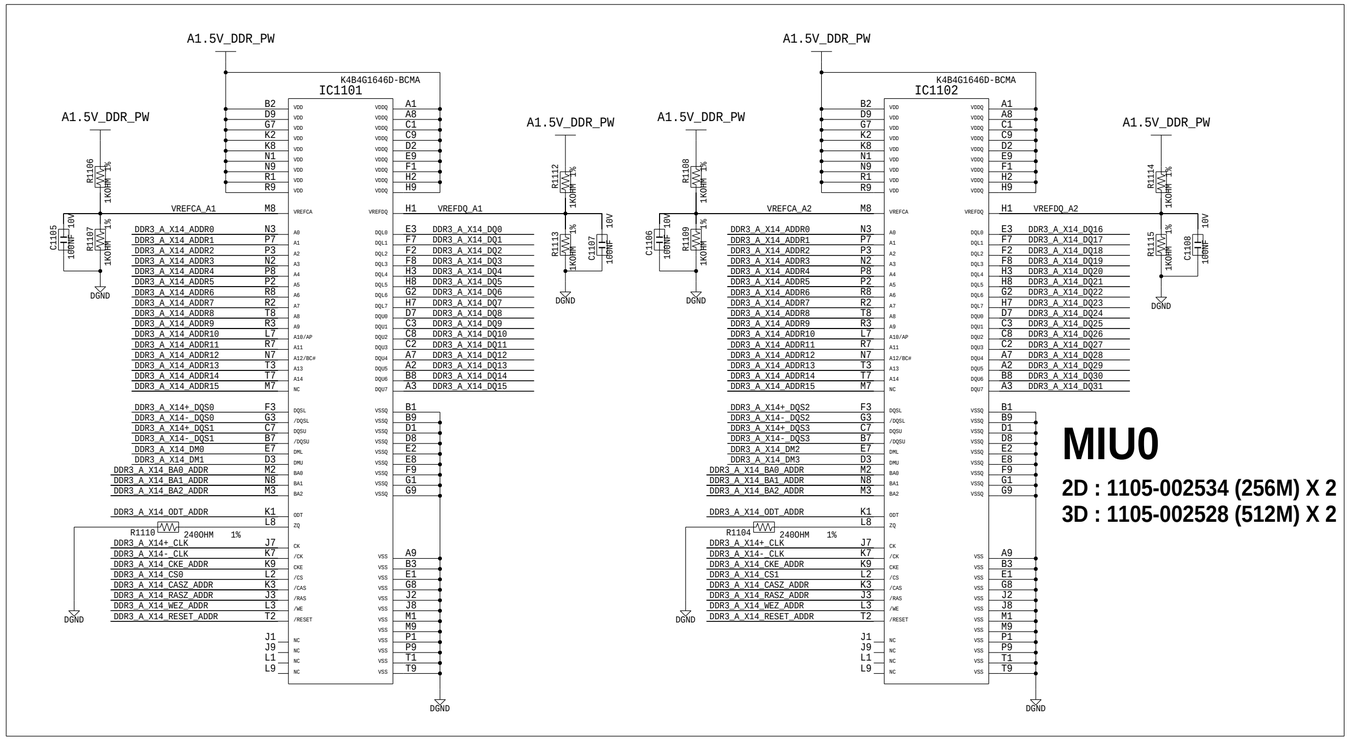

MIU0

2D : 1105-002534 (256M) X 2
3D : 1105-002528 (512M) X 2

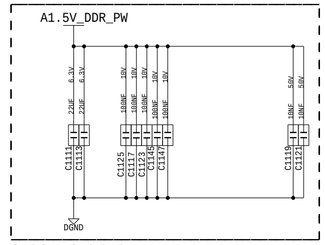

CLOSE TO IC & IC

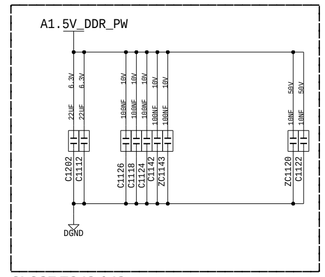

CLOSE TO IC & IC

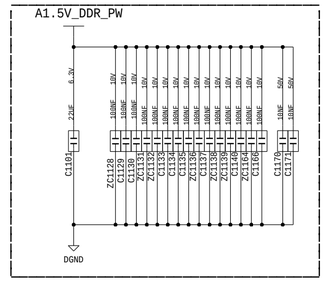

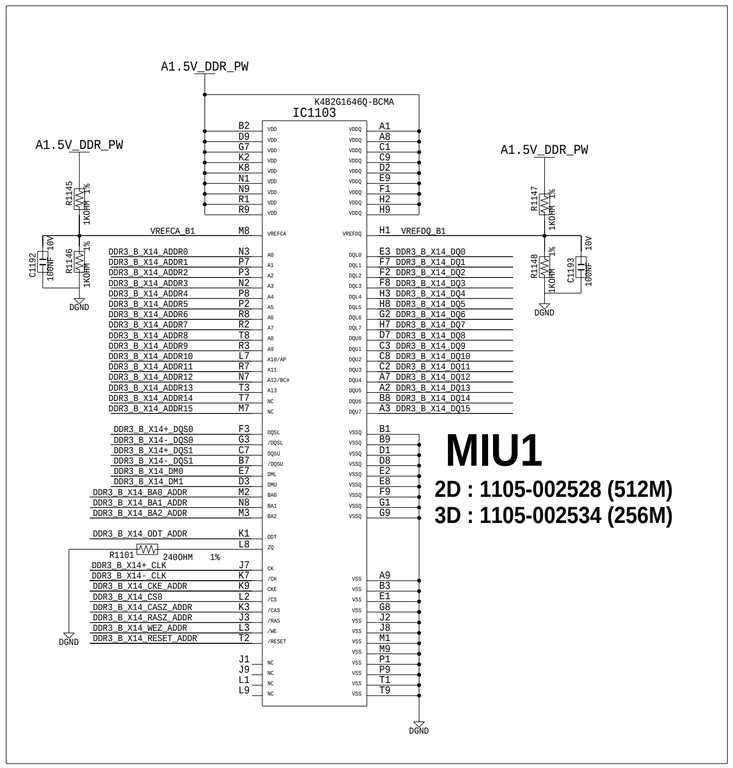

MIU1

2D : 1105-002528 (512M)
3D : 1105-002534 (256M)

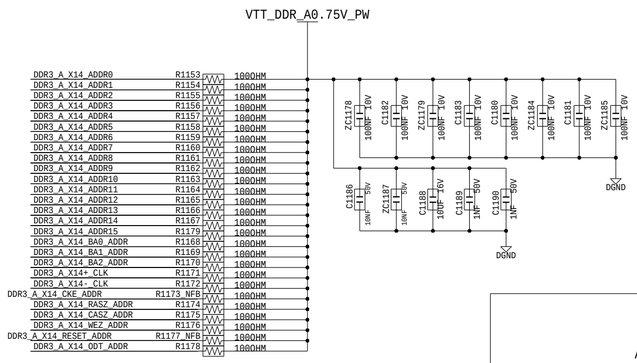

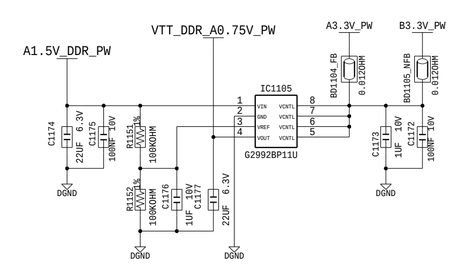

FAST BOOT

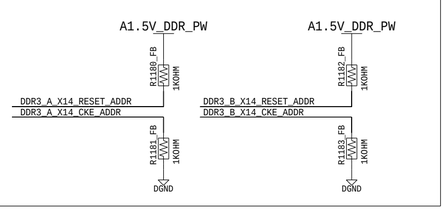

PROJECT NAME: high_x14h_eu	A2	DRAWN BY: Unknown	
		CHECKED BY: Unknown	
SAMSUNG	DEV.STEP: Unknown	REV.: 1.0	APPROVED BY: Unknown
LAST EDITED TIME: Fri Jan 17 18:25:54 2014			TOTAL PAGE NO.: 12 OF 18

SAMSUNG PROPRIETARY
THIS DOCUMENT CONTAINS CONFIDENTIAL
PROPRIETARY INFORMATION THAT IS
SAMSUNG ELECTRONIS CO'S PROPRIETARY.
DO NOT DISCLOSE TO OR DUPLICATE FOR OTHERS
EXCEPT AS AUTHORIZED BY SAMSUNG.
Comply with the threshold of substances
which are specified in 0QA-2049

BLOCK NAME: high_x14h_eu
BLK PAGE NO.: 13 OF 18

13_SUB MICOM FUNCTION / DEBUG PORT

RESET

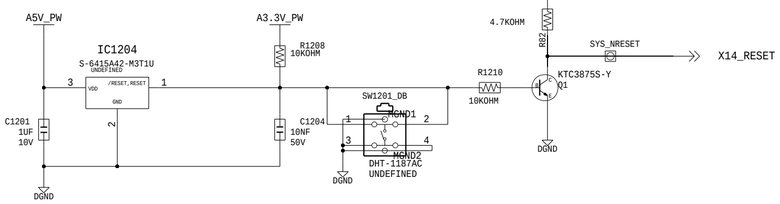

POWER DET

FUNCTION _BT_WIFI

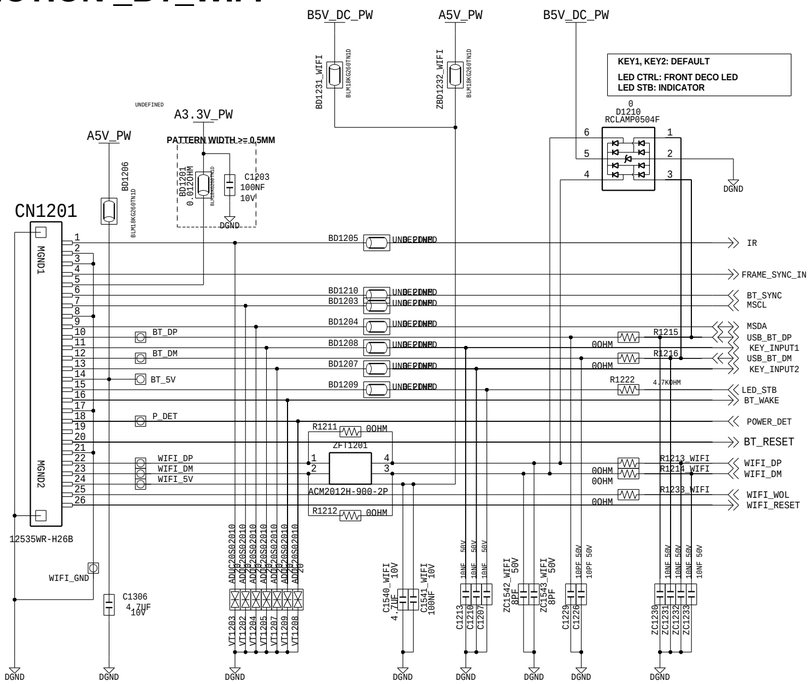

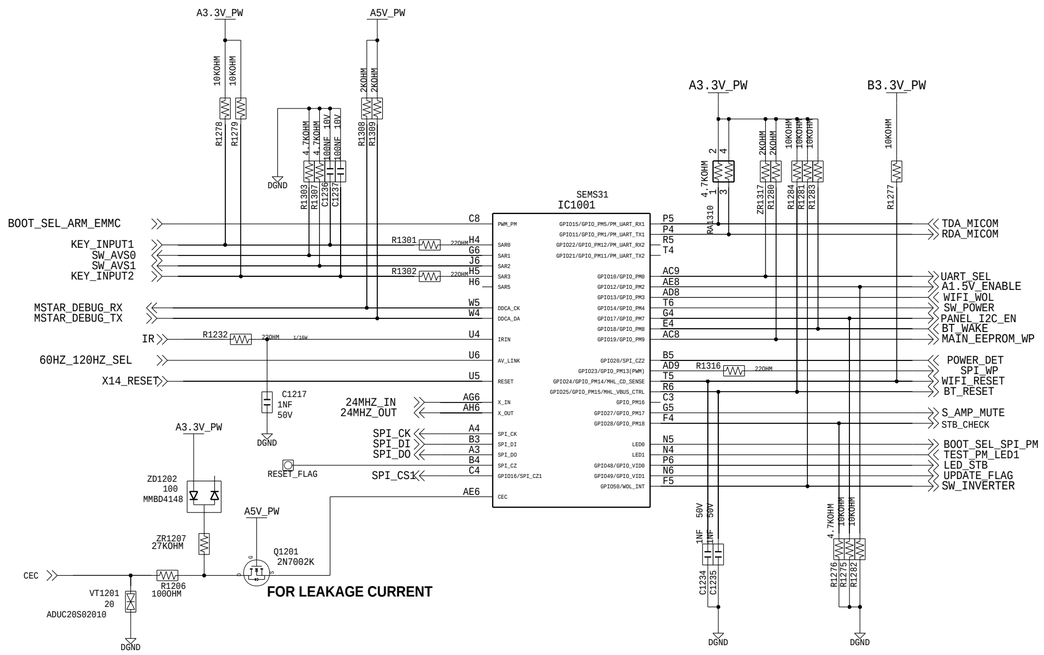

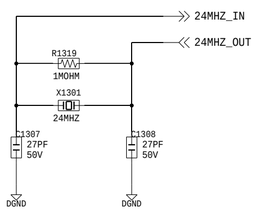

PROJECT NAME: high_x14h_eu		A2	DRAWN BY: Unknown
			CHECKED BY: Unknown
SAMSUNG	DEV.STEP: Unknown	REV.: 1.0	APPROVED BY: Unknown
LAST EDITED TIME: Fri Jan 17 18:25:56 2014			TOTAL PAGE NO.: 13 OF 18

SAMSUNG PROPRIETARY
THIS DOCUMENT CONTAINS CONFIDENTIAL
PROPRIETARY INFORMATION THAT IS
SAMSUNG ELECTRONIS CO'S PROPRIETARY.
DO NOT DISCLOSE TO OR DUPLICATE FOR OTHERS
EXCEPT AS AUTHORIZED BY SAMSUNG.
Comply with the threshold of substances
which are specified in 0QA-2049

BLOCK NAME: high_x14h_eu
BLK PAGE NO.: 14 OF 18

14_X14H CI / NAND / SPI FLASH

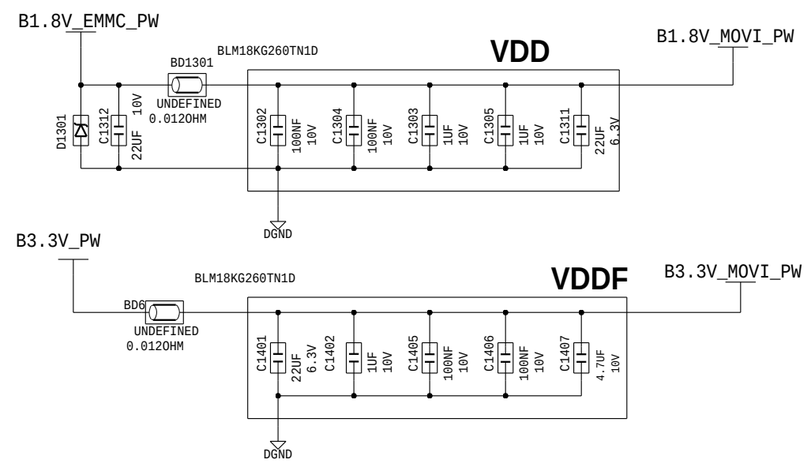

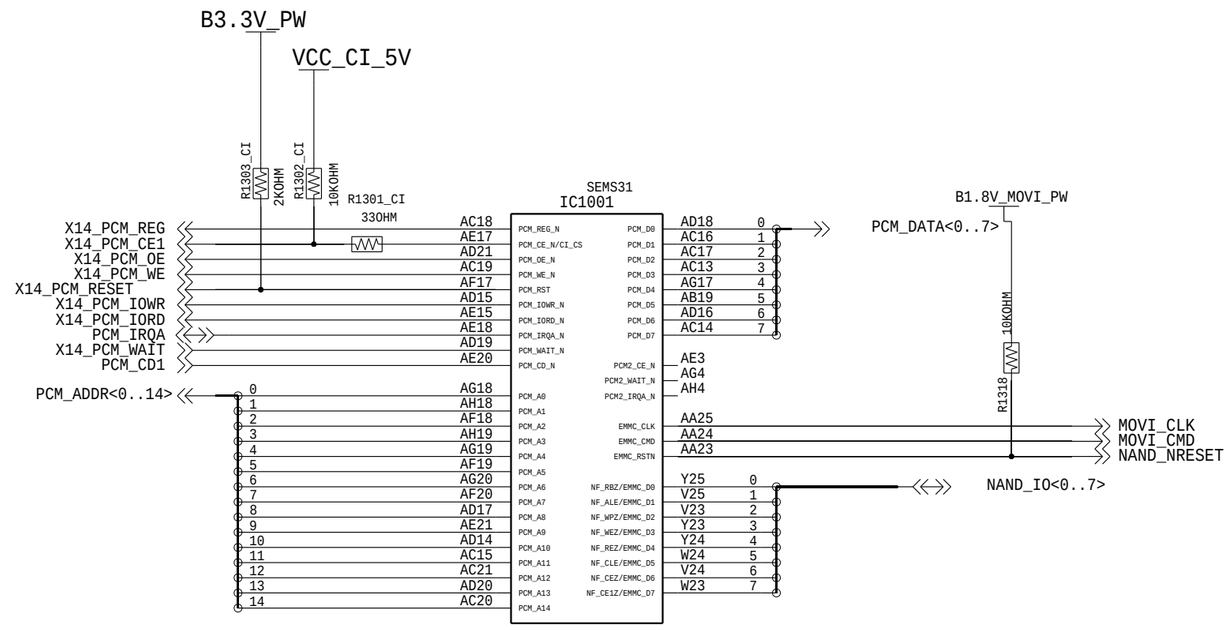

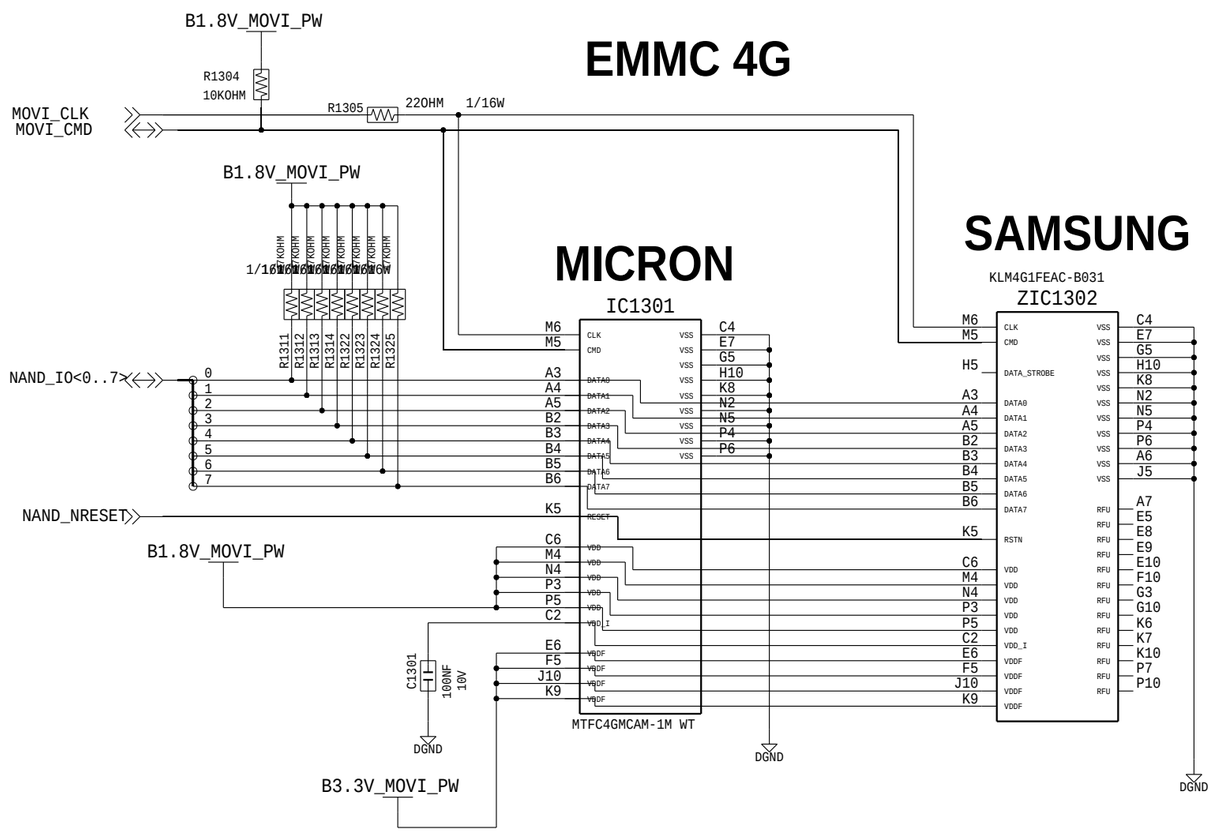

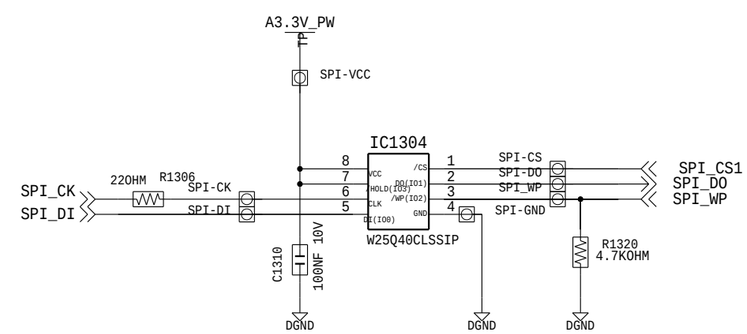

PROJECT NAME: high_x14h_eu		A3	DRAWN BY: Unknown
			CHECKED BY: Unknown
SAMSUNG	DEV.STEP: Unknown	REV.: 1.0	APPROVED BY: Unknown
LAST EDITED TIME: Fri Jan 17 18:25:57 2014			TOTAL PAGE NO.: 14 OF 18

SAMSUNG PROPRIETARY
THIS DOCUMENT CONTAINS CONFIDENTIAL
PROPRIETARY INFORMATION THAT IS
SAMSUNG ELECTRONIS CO'S PROPRIETARY.
DO NOT DISCLOSE TO OR DUPLICATE FOR OTHERS
EXCEPT AS AUTHORIZED BY SAMSUNG.
Comply with the threshold of substances
which are specified in 0QA-2049

BLOCK NAME: high_x14h_eu
BLK PAGE NO.: 15 OF 18

15_X14H LVDS / AUDIO / LAN

LVDS

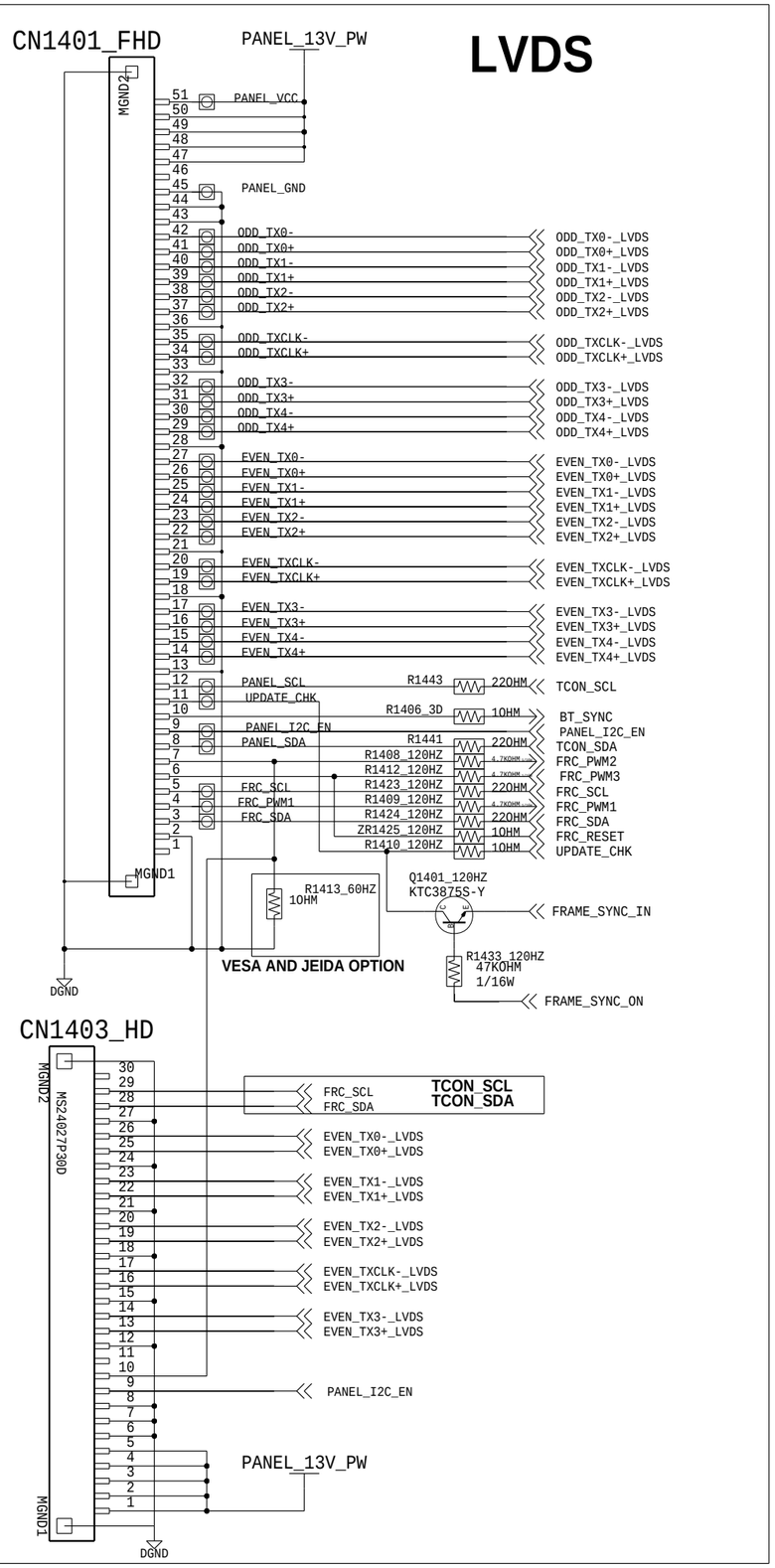

AUDIO

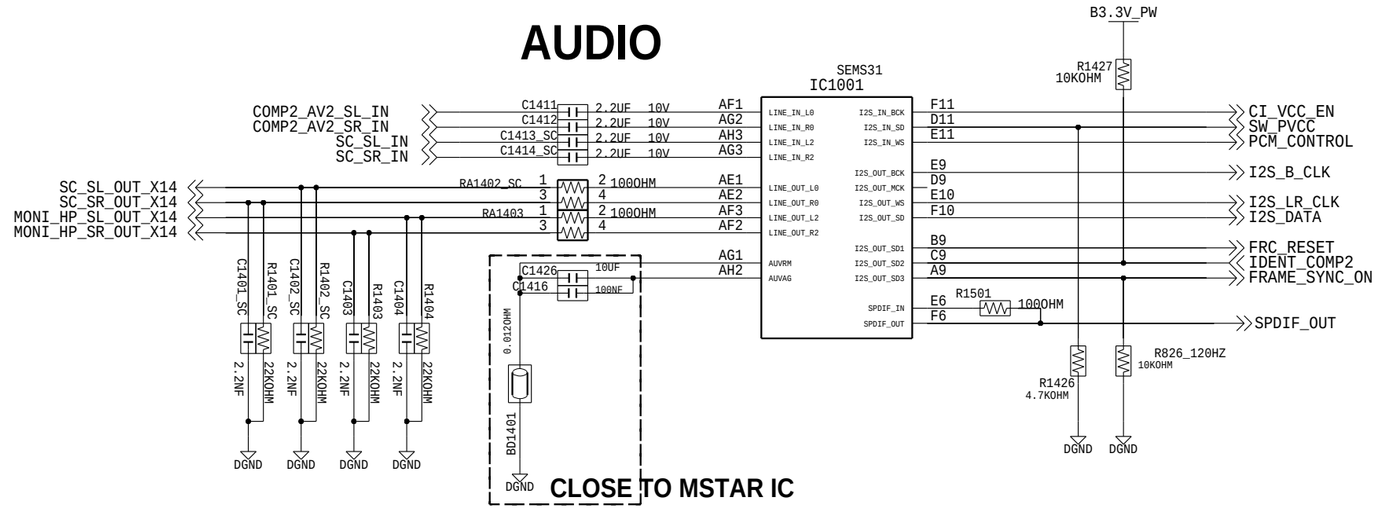

LVDS

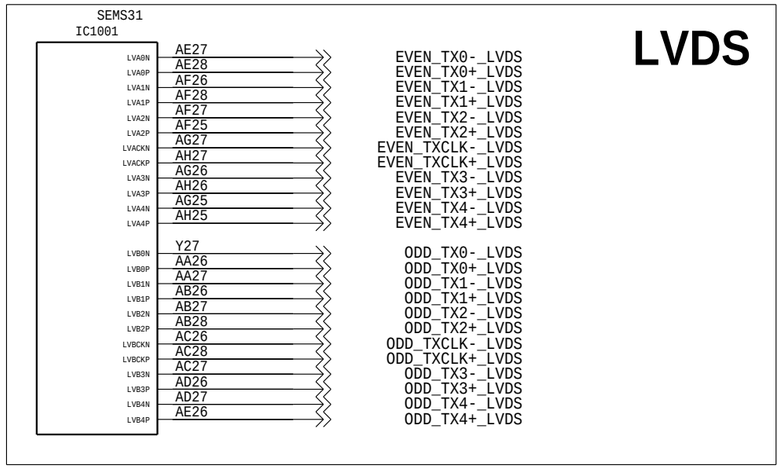

LAN

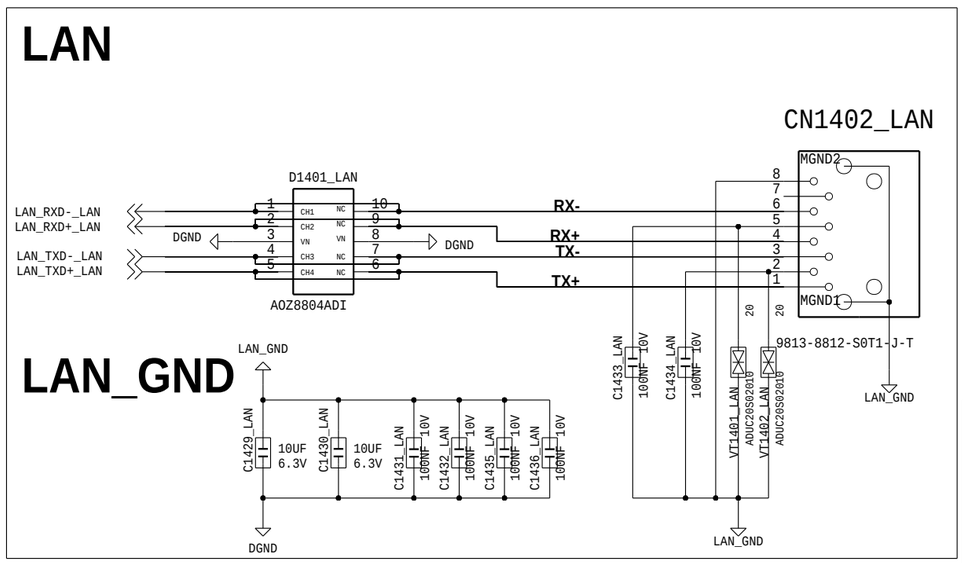

LAN_GND

PROJECT NAME: high_x14h_eu	A3		DRAWN BY: Unknown
			CHECKED BY: Unknown
SAMSUNG	DEV.STEP: Unknown	REV.: 1.0	APPROVED BY: Unknown
LAST EDITED TIME: Fri Jan 17 18:25:46 2014			TOTAL PAGE NO.: 15 OF 18

SAMSUNG PROPRIETARY
THIS DOCUMENT CONTAINS CONFIDENTIAL
PROPRIETARY INFORMATION THAT IS
SAMSUNG ELECTRONIS CO'S PROPRIETARY.
DO NOT DISCLOSE TO OR DUPLICATE FOR OTHERS
EXCEPT AS AUTHORIZED BY SAMSUNG.
Comply with the threshold of substances
which are specified in 0QA-2049

BLOCK NAME: high_x14h_eu
BLK PAGE NO.: 16 OF 18

16. X14H USB / USB1/2/3 WIFI

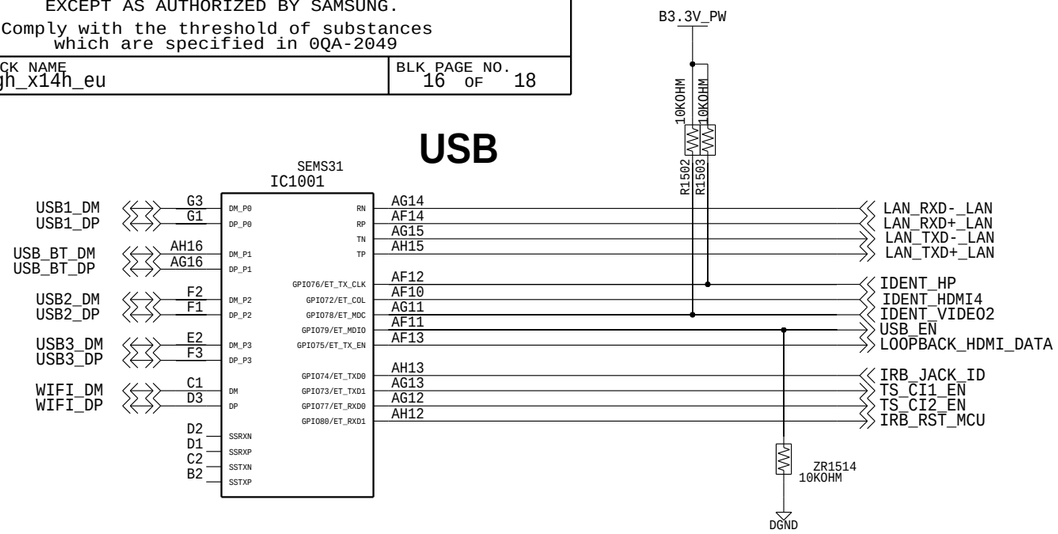

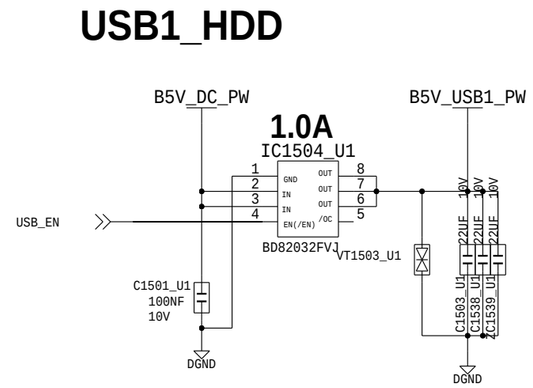

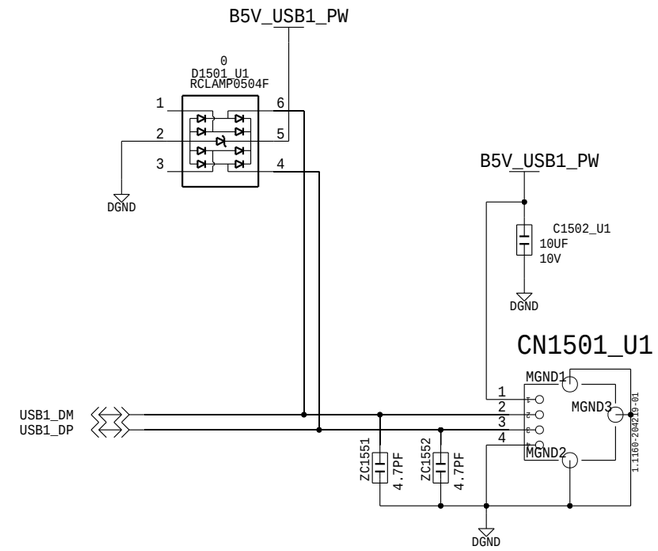

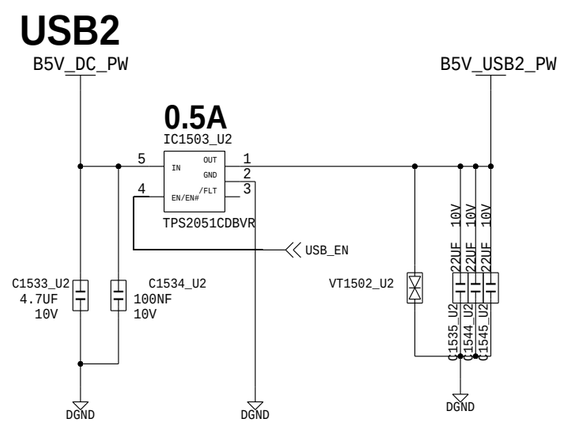

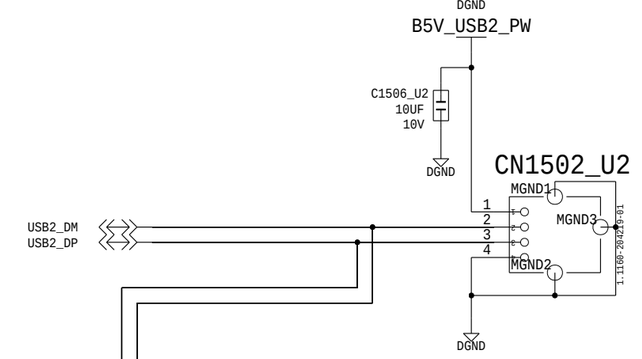

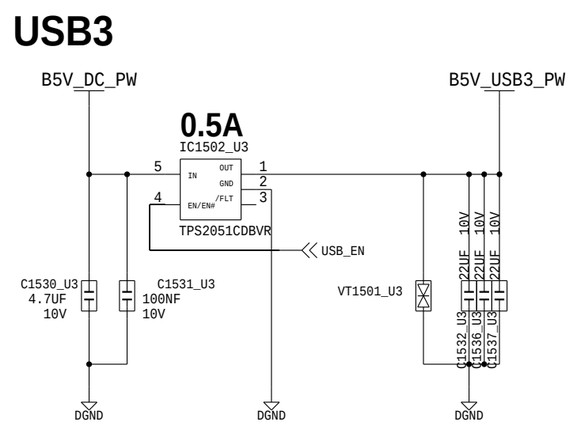

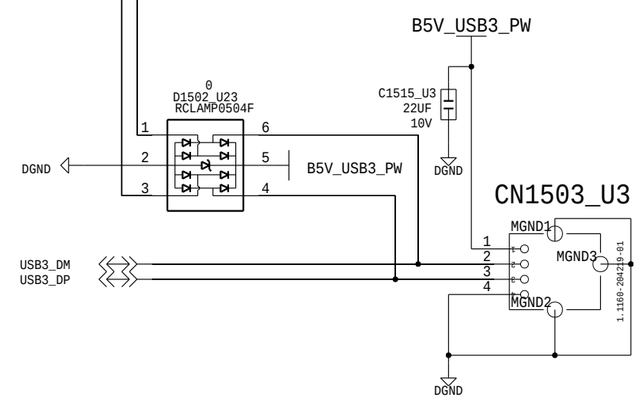

PROJECT NAME: high_x14h_eu		A3	DRAWN BY: Unknown
			CHECKED BY: Unknown
SAMSUNG	DEV.STEP: Unknown	REV.: 1.0	APPROVED BY: Unknown
LAST EDITED TIME: Fri Jan 17 18:26:02 2014			TOTAL PAGE NO.: 16 OF 18

SAMSUNG PROPRIETARY
THIS DOCUMENT CONTAINS CONFIDENTIAL
PROPRIETARY INFORMATION THAT IS
SAMSUNG ELECTRONIS CO'S PROPRIETARY.
DO NOT DISCLOSE TO OR DUPLICATE FOR OTHERS
EXCEPT AS AUTHORIZED BY SAMSUNG.
Comply with the threshold of substances
which are specified in 0QA-2049

BLOCK NAME: high_x14h_eu
BLK PAGE NO.: 17 OF 18

17_PCMCIA

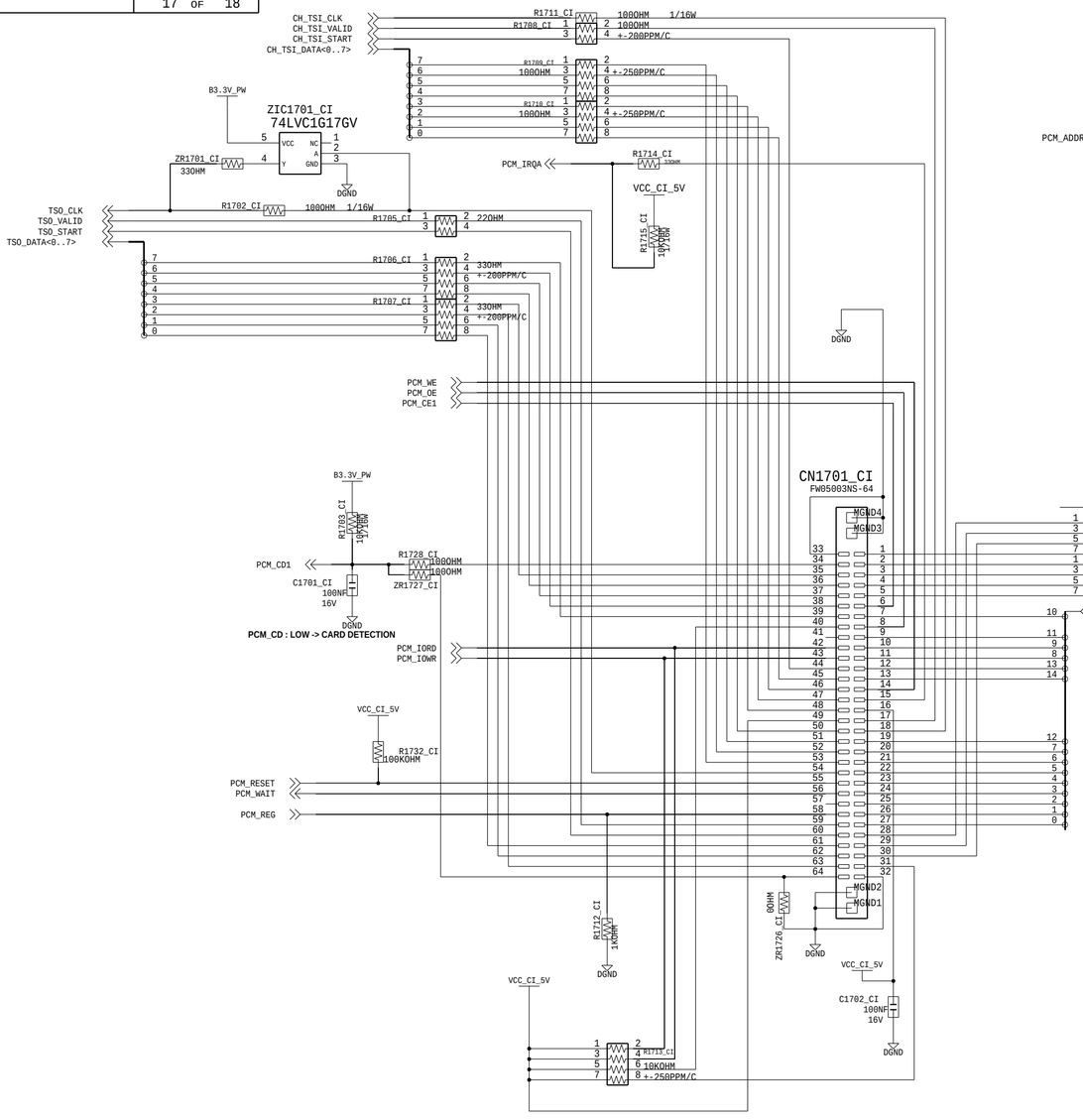

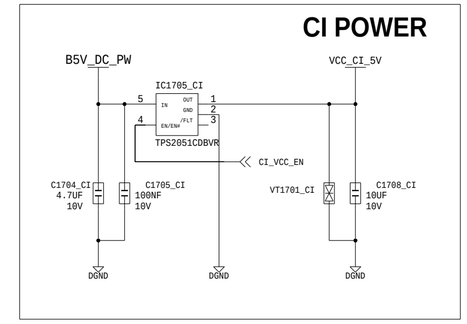

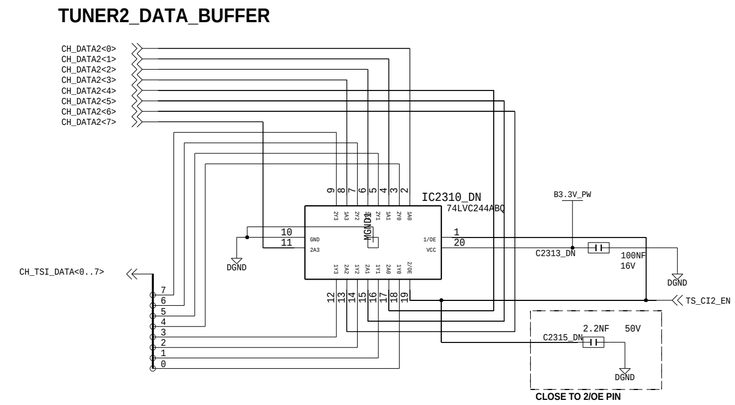

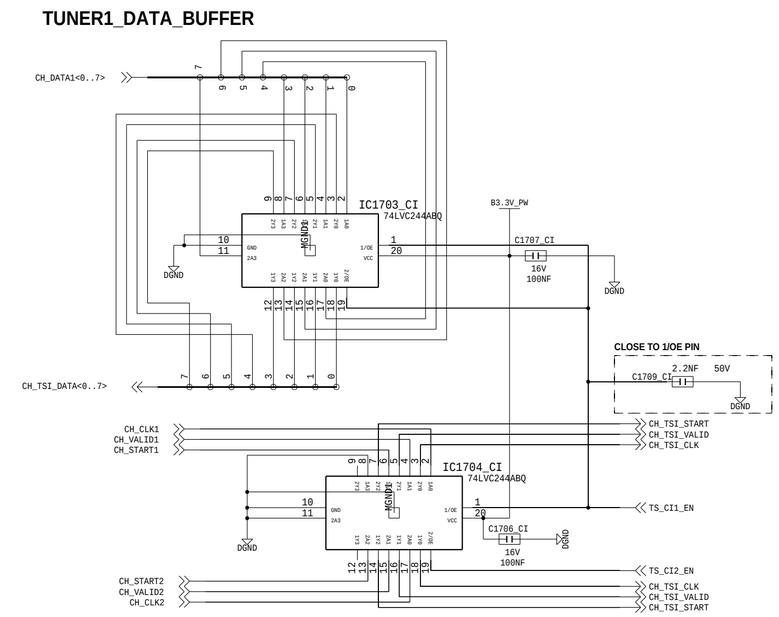

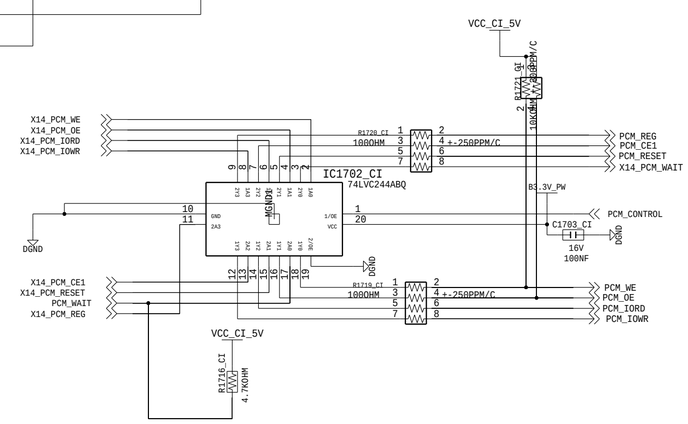

PROJECT NAME: high_x14h_eu	A2		DRAWN BY: Unknown
			CHECKED BY: Unknown
SAMSUNG	DEV.STEP: Unknown	REV.: 1.0	APPROVED BY: Unknown
LAST EDITED TIME: Fri Jan 17 18:26:00 2014			TOTAL PAGE NO.: 17 OF 18

SAMSUNG PROPRIETARY
THIS DOCUMENT CONTAINS CONFIDENTIAL
PROPRIETARY INFORMATION THAT IS
SAMSUNG ELECTRONIS CO'S PROPRIETARY.
DO NOT DISCLOSE TO OR DUPLICATE FOR OTHERS
EXCEPT AS AUTHORIZED BY SAMSUNG.
Comply with the threshold of substances
which are specified in 0QA-2049

BLOCK NAME: high_x14h_eu
BLK PAGE NO.: 18 OF 18

18_IR BLASTER

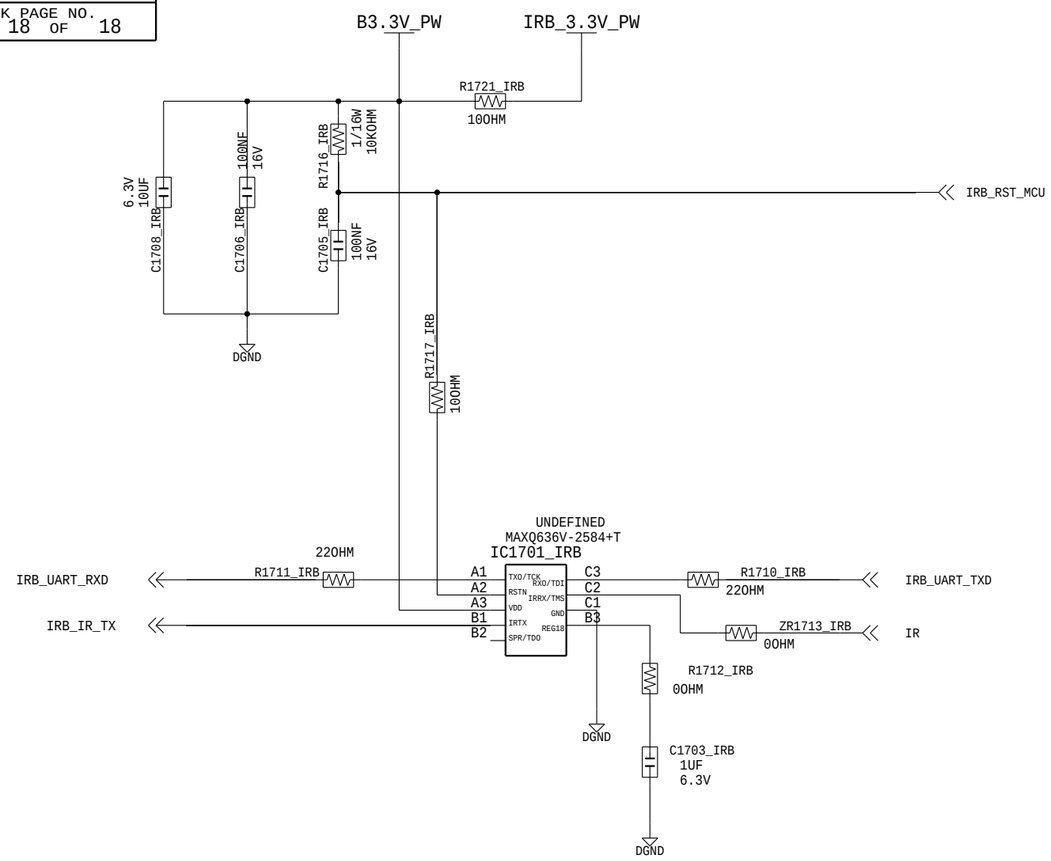

IRB EXT IR

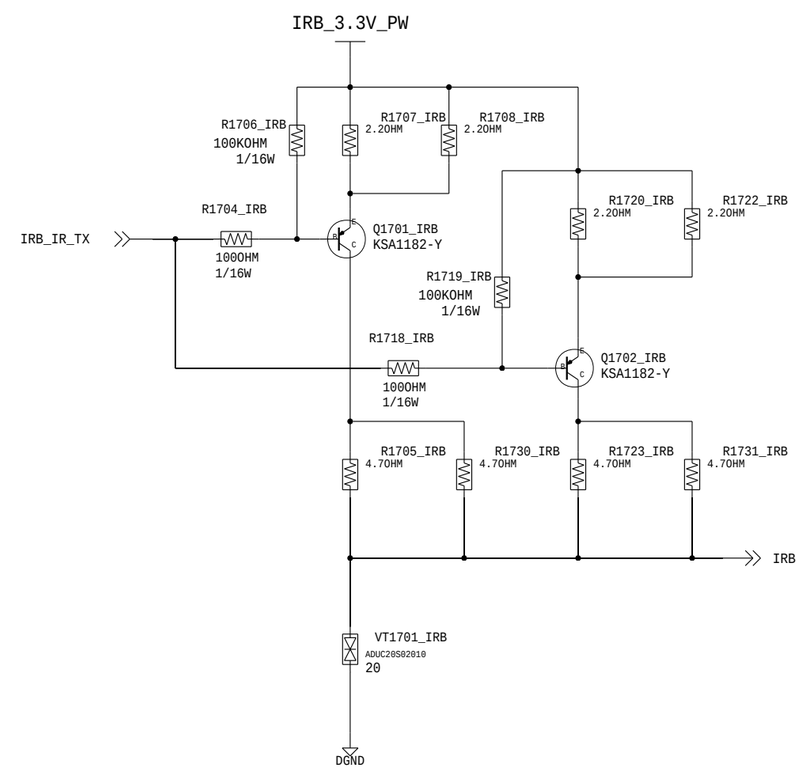

DEBUG CONNECTOR

BOTTOM

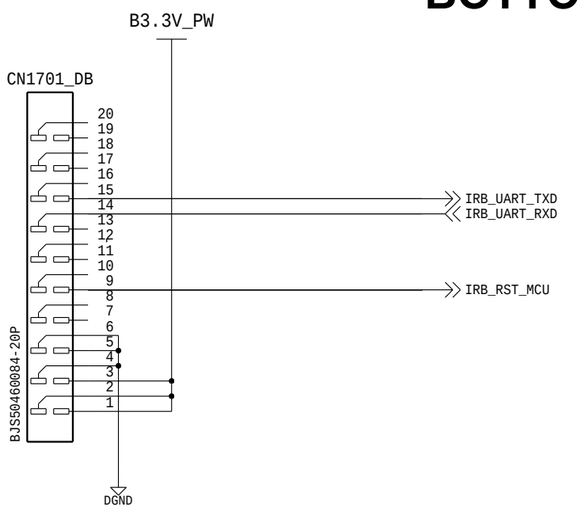

PROJECT NAME: high_x14h_eu	A3		DRAWN BY: Unknown
			CHECKED BY: Unknown
SAMSUNG	DEV.STEP: Unknown	REV.: 1.0	APPROVED BY: Unknown
LAST EDITED TIME: Fri Jan 17 18:25:53 2014			TOTAL PAGE NO.: 18 OF 18