SAMSUNG PROPRIETARY
THIS DOCUMENT CONTAINS CONFIDENTIAL
PROPRIETARY INFORMATION THAT IS
SAMSUNG ELECTRONIS CO'S PROPRIETARY.
DO NOT DISCLOSE TO OR DUPLICATE FOR OTHERS
EXCEPT AS AUTHORIZED BY SAMSUNG.
Comply with the threshold of substances
which are specified in 0QA-2049

BLOCK NAME: high_nt14m_2015_union
BLK PAGE NO.: 1 OF 18

NT14M J4303 W/W

BOARD SCHEMATIC

SCHEMATICS INDEX

01_COVER SHEET
02_STANDBY / MAIN POWER
03_MAIN CORE POWER
04_SOUND AMP / SCART AMP
SPIDF / AUDIO OUT / POP NOISE SOLUTION
05_SCART / COMPONENT / VIDEO
06_HDMI 1 / 2
07_TUNER
08_CVBS / TS / JTAG
09_NT14M GPIO / MODE SELECT / MAIN EEPROM
10_POWER / GND
11_POWER / GND 2
12_DDR3 MEMORY
13_SUBMICOM / FUNCTION / RS232
14_EMMC / SPI FLASH
15_LVDS / AUDIO / LAN
16_USB
17_CI
18_LED DRIVER

<LOCATION SUFFIX>

_FHD : FHD
_HD : HD

_SC : SCART OPTION
_CI : CI OPTION
_COMP : COMPONENT OPTION

_HN : HALF NIM TUNER
_FN : FULL NIM TUNER
_DS : SATELLITE TUNER
_BR : ISDB-T

_AU : AUDIO OUT
_OP : OPTICAL

_H1 : HDMI1
_H2 : HDMI2

_WIFI : WIFI OPTION
_ARC : HDMI ARC
_SPI : SPI OPTION
_U1 : USB1

Z : DELETE OPTION
_DB : DEBUG

SCHEMATICS INDEX

LAYER 1 ----- TOP (SIGNAL1)
LAYER 2 ----- INNER 1 (GND)
LAYER 3 ----- INNER 2 (POWER)
LAYER 4 ----- BOTTOM (SIGNAL2)

PROJECT NAME: high_nt14m_2015_union	A2	DRAWN BY: cjwha
		CHECKED BY: Unknown
SAMSUNG	DEV.STEP: @di_dev_step0 / REV.: 1.0	APPROVED BY: Unknown
LAST EDITED TIME: Sat Nov 08 10:14:48 2014		TOTAL PAGE NO.: 1 OF 18

D:/atdm/projects/2015/high_nt14m_2015_union\high_nt14m_2015_union.cpm

SAMSUNG PROPRIETARY
THIS DOCUMENT CONTAINS CONFIDENTIAL
PROPRIETARY INFORMATION THAT IS
SAMSUNG ELECTRONIS CO'S PROPRIETARY.
DO NOT DISCLOSE TO OR DUPLICATE FOR OTHERS
EXCEPT AS AUTHORIZED BY SAMSUNG.
Comply with the threshold of substances
which are specified in 0QA-2049

02. STANDBY / MAIN POWER

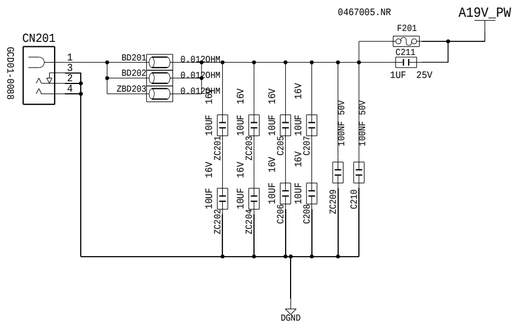

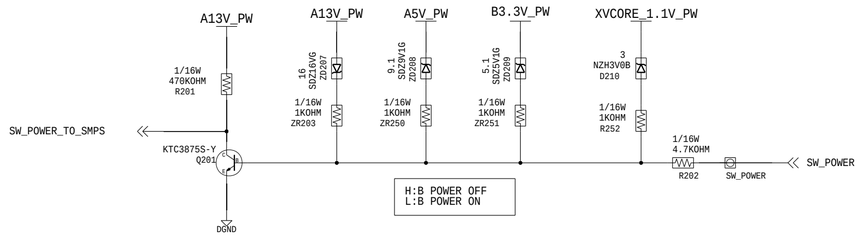

A5V_PW -> B5V_DC_PW

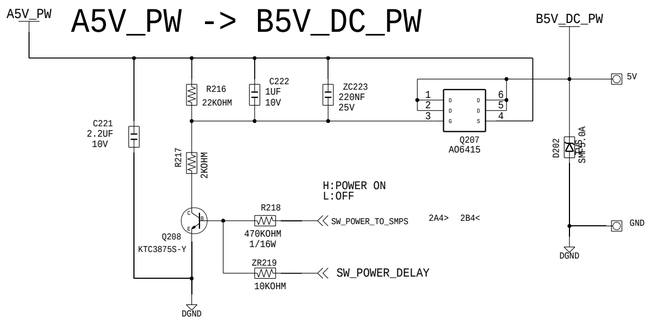

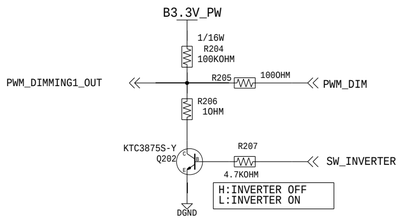

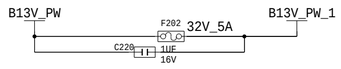

A19V_PW -> B19V_PW

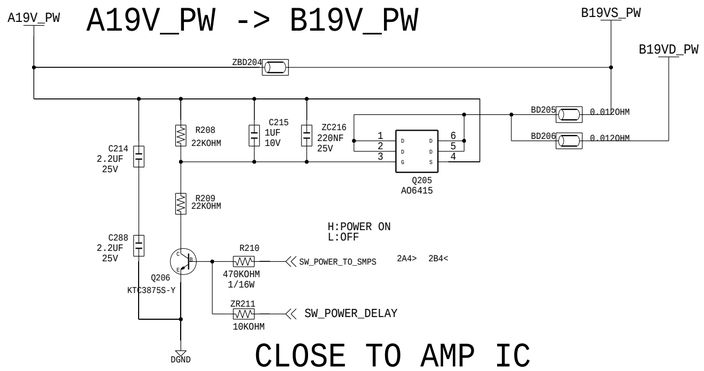

CLOSE TO AMP IC

A13V_PW -> A5V_PW

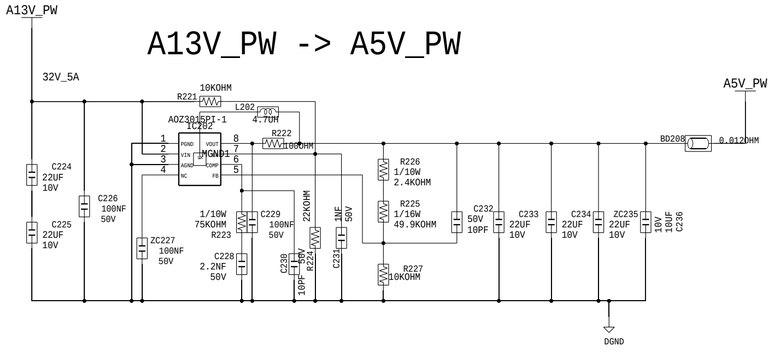

B1.5V_DDR_PW

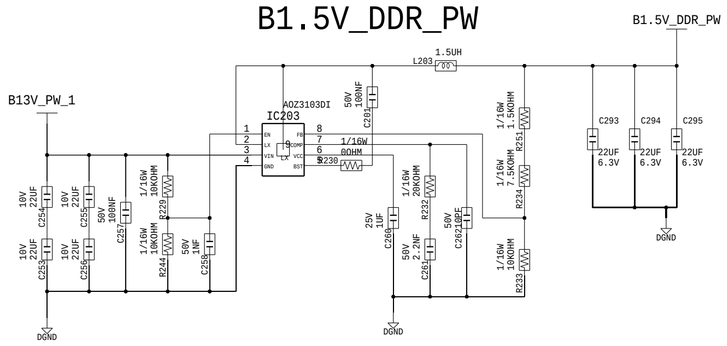

CLOST TO DDR IC

B3.3V_PW

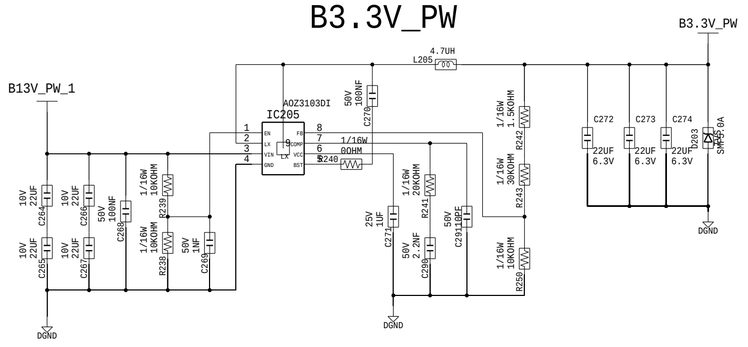

A19V_PW -> A13V_PW

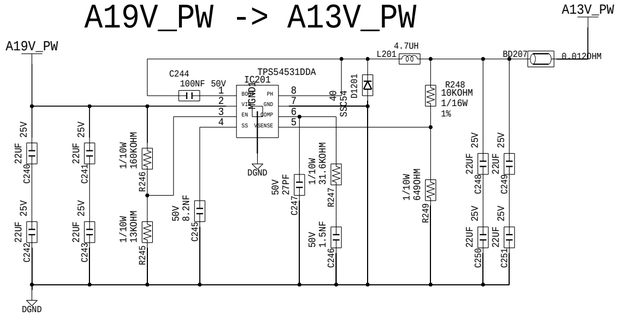

A13V_PW -> B13V_PW

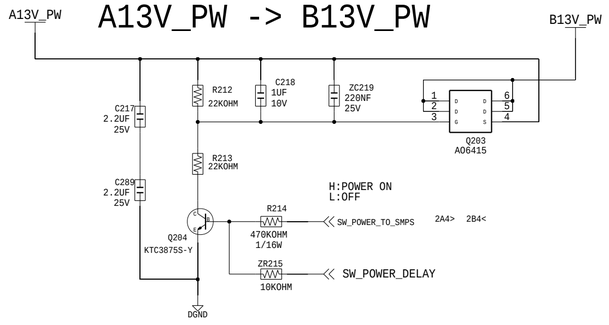

PROJECT NAME	A2	DRAWN BY
high_nt14m_2015_union		cjwha
		CHECKED BY: Unknown
SAMSUNG	DEV.STEP: @di_dev_step	REV.: 0.0
		APPROVED BY: Unknown
LAST EDITED TIME: Mon Dec 22 16:12:01 2014		TOTAL PAGE NO.: 2 OF 18

SAMSUNG PROPRIETARY
THIS DOCUMENT CONTAINS CONFIDENTIAL
PROPRIETARY INFORMATION THAT IS
SAMSUNG ELECTRONIS CO'S PROPRIETARY.
DO NOT DISCLOSE TO OR DUPLICATE FOR OTHERS
EXCEPT AS AUTHORIZED BY SAMSUNG.
Comply with the threshold of substances
which are specified in 0QA-2049

BLOCK NAME: high_nt14m_2015_union
BLK PAGE NO.: 3 OF 18

03.MAIN ÃOORE POWER

CORE_1.15V

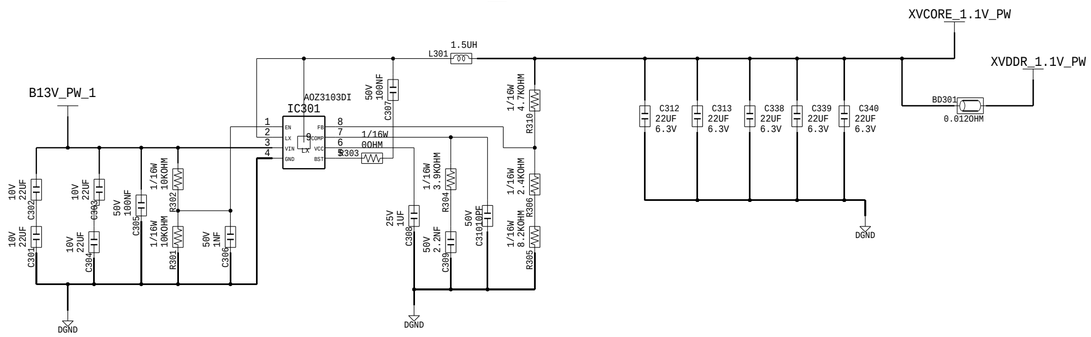

PANEL 13V

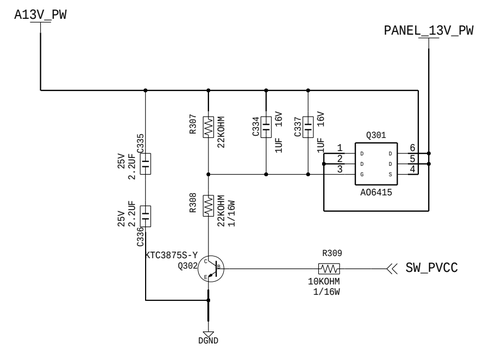

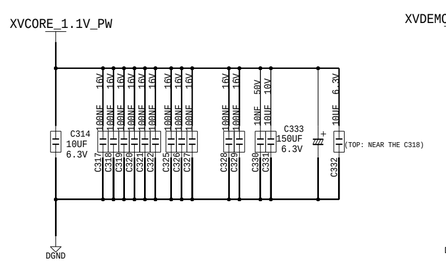

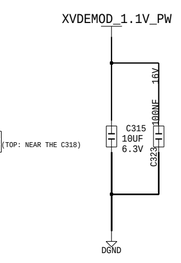

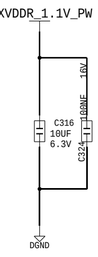

A5V -> A3.3V

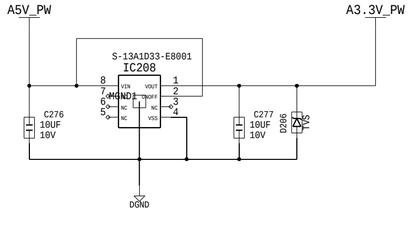

B2.5V_PW

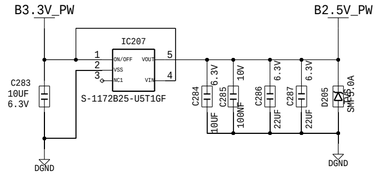

CLOSE TO NT14M

B1.8V_EMMC_PW

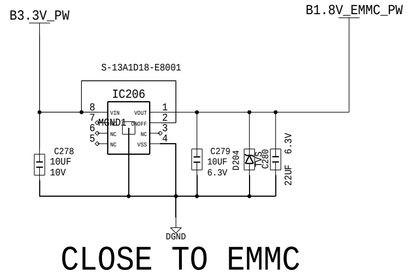

CLOSE TO EMMC

PROJECT NAME: high_nt14m_2015_union		A2	DRAWN BY: cjwha
			CHECKED BY: Unknown
SAMSUNG	DEV.STEP: @di_dev_step	REV.: 1.0	APPROVED BY: Unknown
LAST EDITED TIME: Mon Dec 22 16:11:59 2014			TOTAL PAGE NO.: 3 OF 18

SAMSUNG PROPRIETARY
THIS DOCUMENT CONTAINS CONFIDENTIAL
PROPRIETARY INFORMATION THAT IS
SAMSUNG ELECTRONIS CO'S PROPRIETARY.
DO NOT DISCLOSE TO OR DUPLICATE FOR OTHERS
EXCEPT AS AUTHORIZED BY SAMSUNG.
Comply with the threshold of substances
which are specified in 0QA-2049

04.SOUND AMP / SCART AMP / HEADPHONE, MONITOR OUT SPDIF / POP NOISE SOLUTION / DVI SOUND

POP NOISE SOLUTION

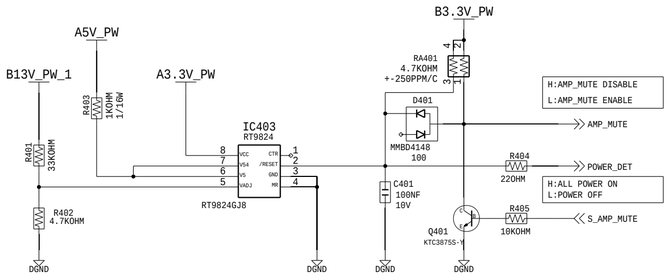

SPDIF OUT

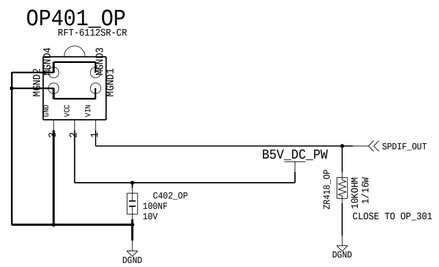

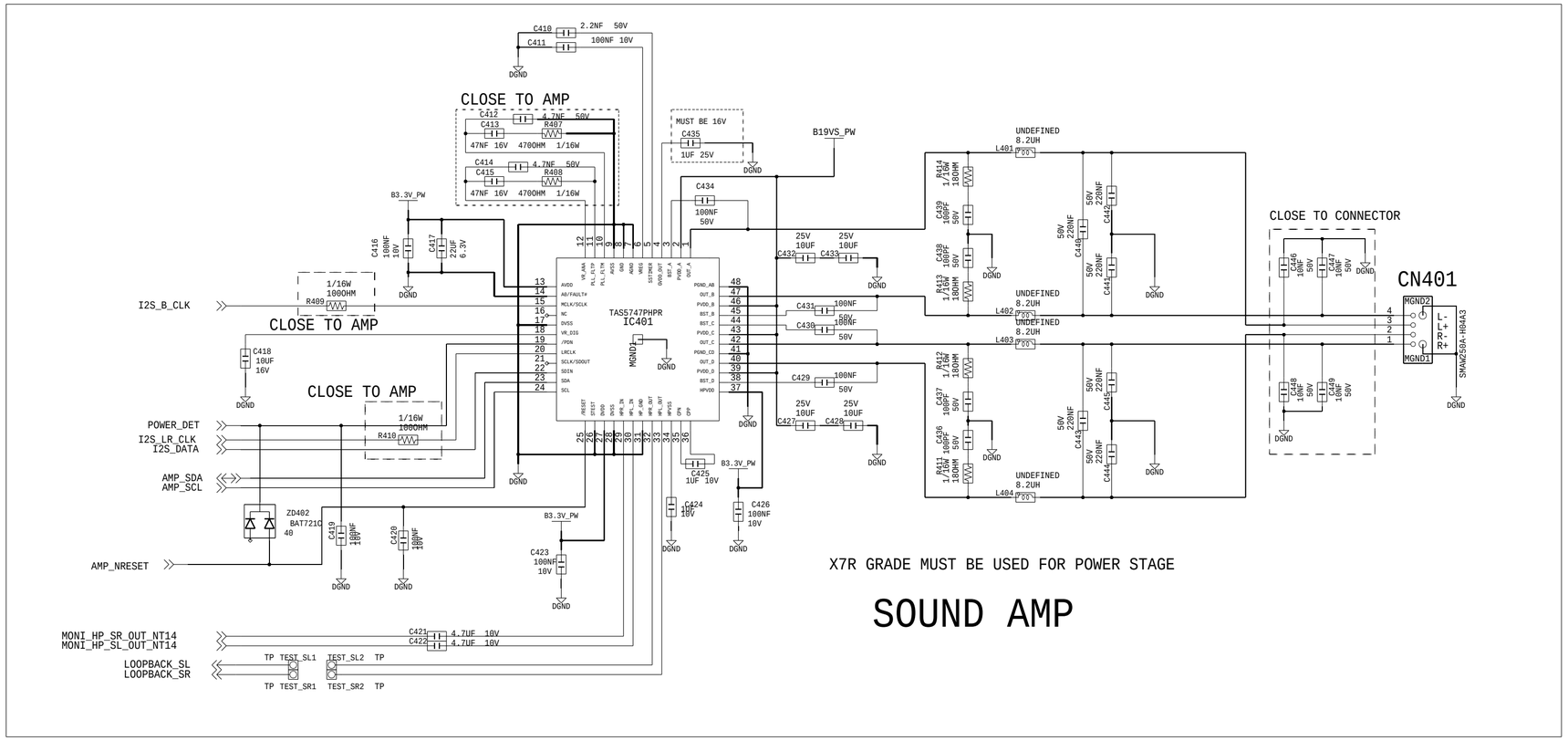

X7R GRADE MUST BE USED FOR POWER STAGE

SOUND AMP

SCART SOUND OUT(ONLY USE EU/CIS)

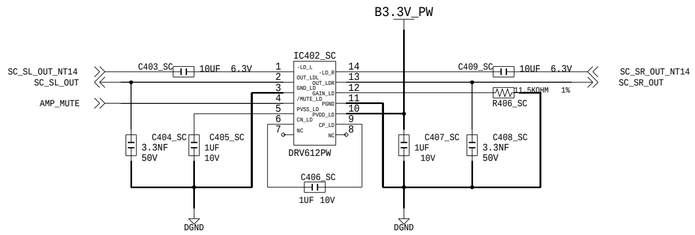

SAMSUNG PROPRIETARY
THIS DOCUMENT CONTAINS CONFIDENTIAL
PROPRIETARY INFORMATION THAT IS
SAMSUNG ELECTRONIS CO'S PROPRIETARY.
DO NOT DISCLOSE TO OR DUPLICATE FOR OTHERS
EXCEPT AS AUTHORIZED BY SAMSUNG.
Comply with the threshold of substances
which are specified in 0QA-2049

05.SCART / COMPONENT / VIDEO

SCART&COMPONENT

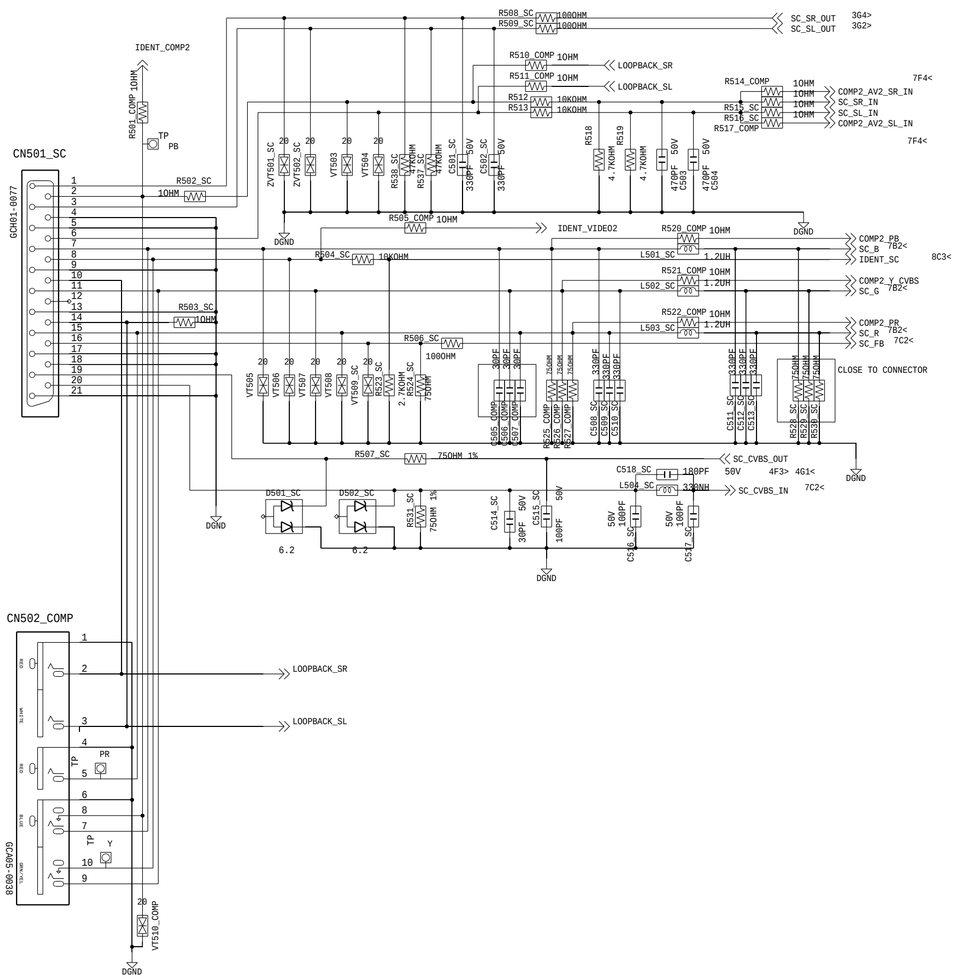

SCART CVBS OUT AMP

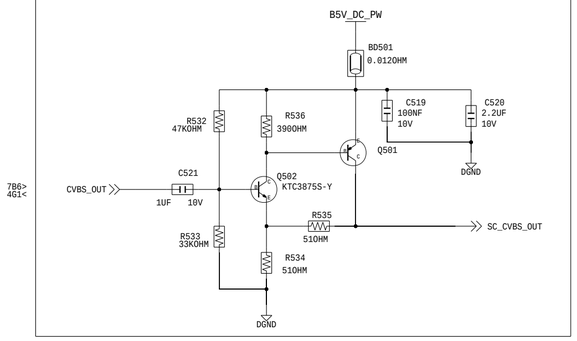

SAMSUNG PROPRIETARY
THIS DOCUMENT CONTAINS CONFIDENTIAL
PROPRIETARY INFORMATION THAT IS
SAMSUNG ELECTRONIS CO'S PROPRIETARY.
DO NOT DISCLOSE TO OR DUPLICATE FOR OTHERS
EXCEPT AS AUTHORIZED BY SAMSUNG.
Comply with the threshold of substances
which are specified in 0QA-2049

BLOCK NAME: high_nt14m_2015_union
BLK PAGE NO.: 6 OF 18

06.HDMI 1

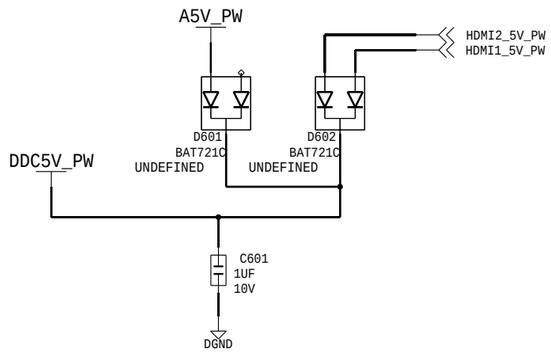

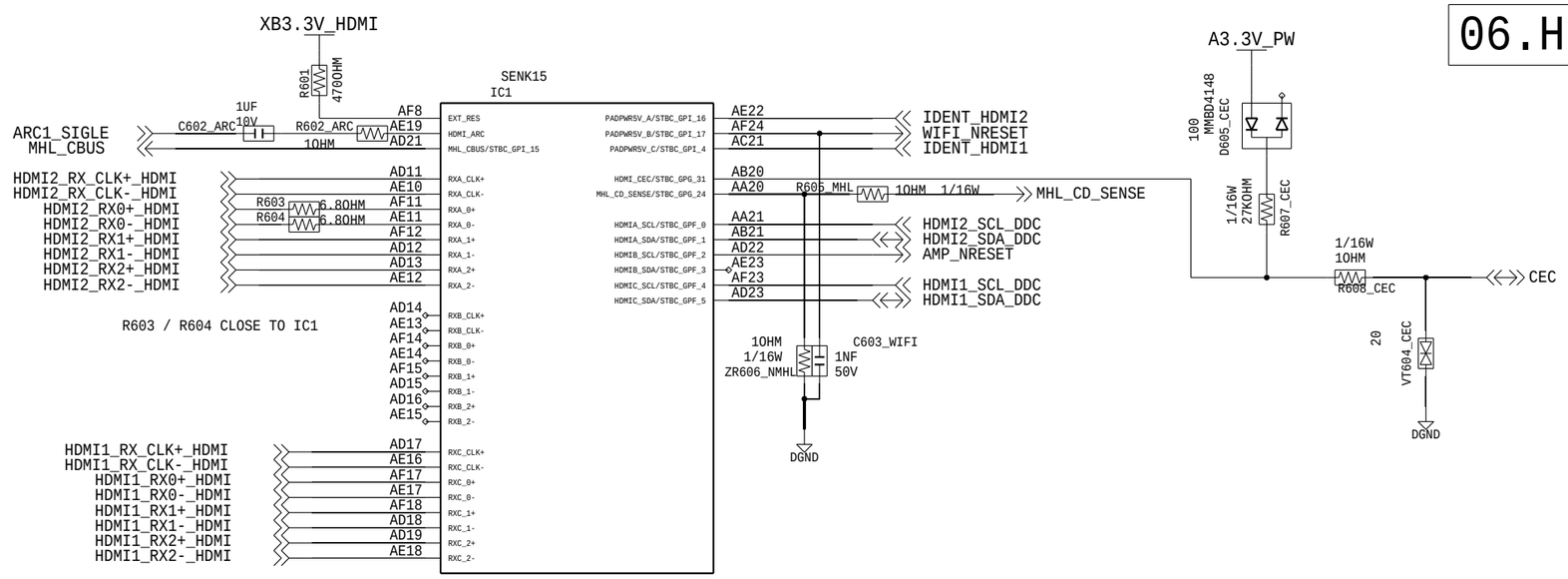

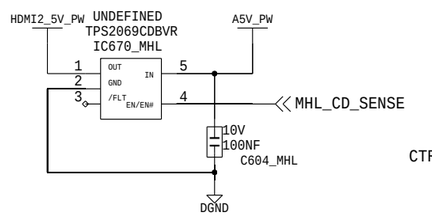

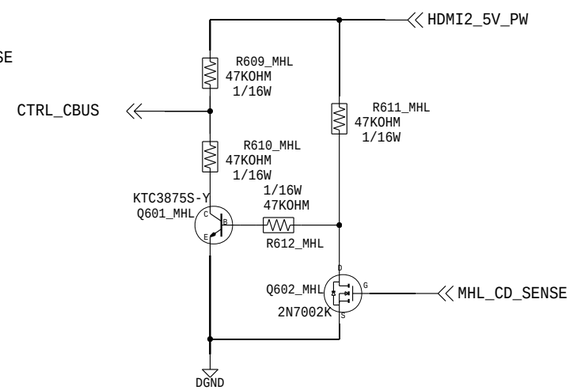

HDMI INPUT2 (MHL)

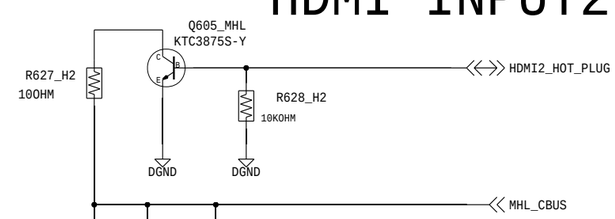

HDMI INPUT1 (STB/ARC)

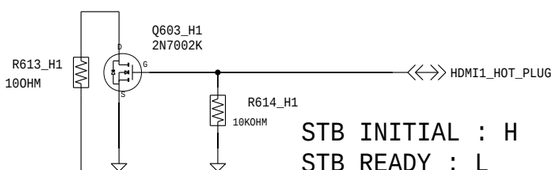

STB INITIAL : H
STB READ : L

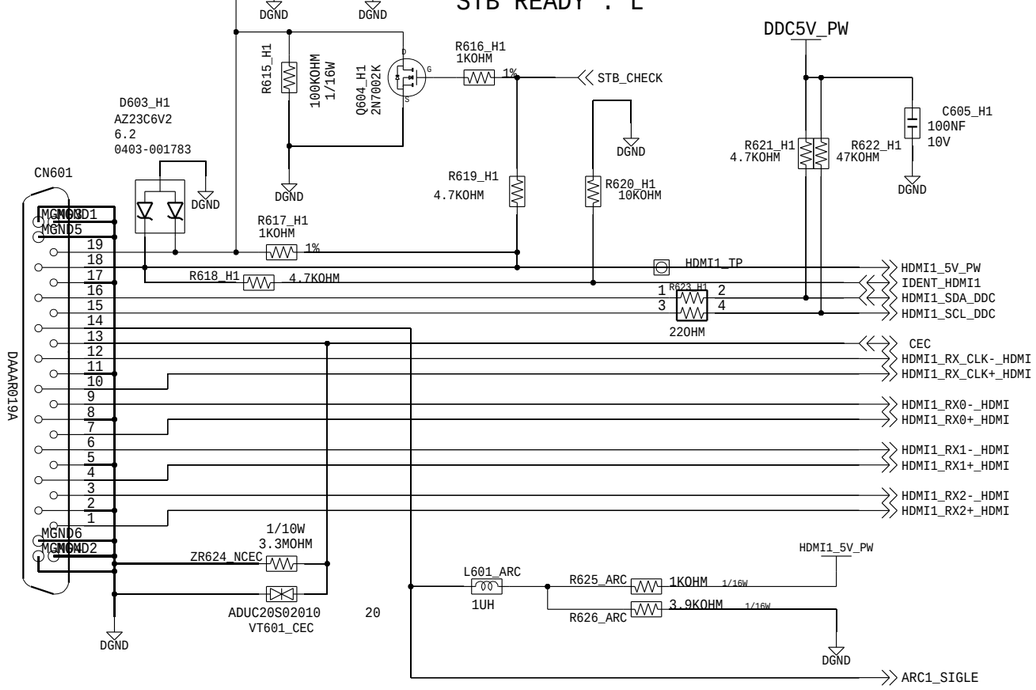

STB INITIAL : H
STB READ : L

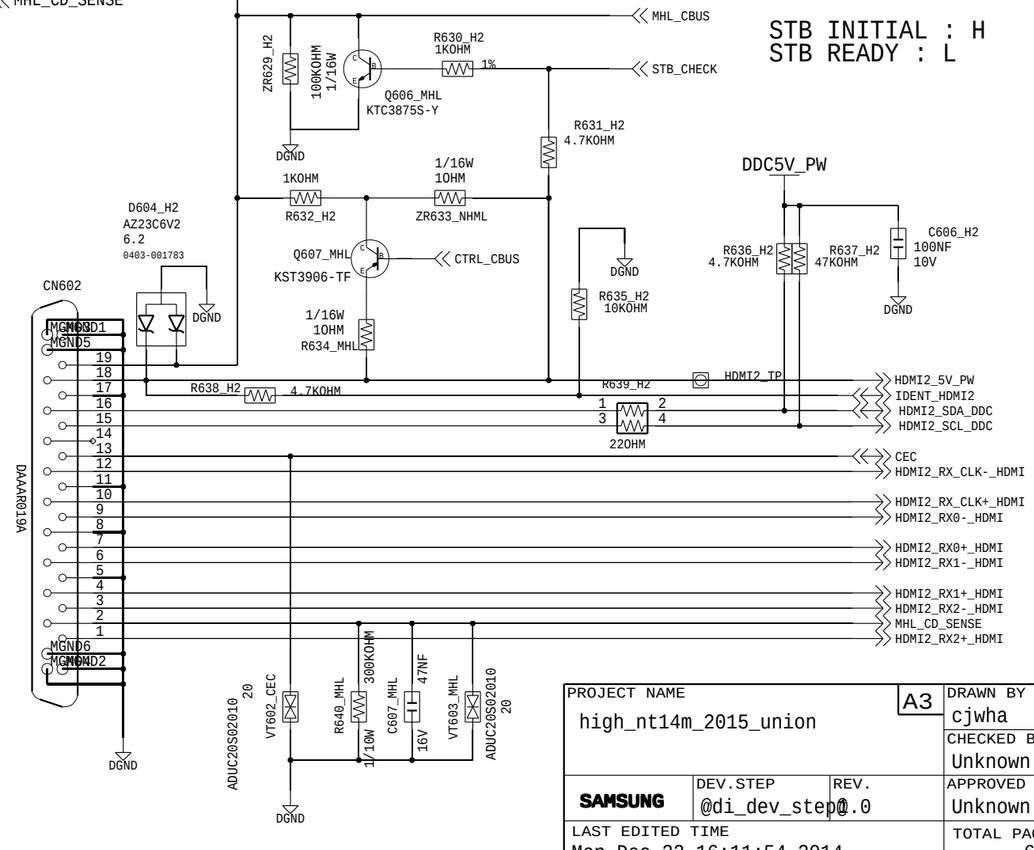

PROJECT NAME: high_nt14m_2015_union	A3	DRAWN BY: cjwha	
		CHECKED BY: Unknown	
SAMSUNG	DEV.STEP: @di_dev_step	REV.: 0.0	APPROVED BY: Unknown
LAST EDITED TIME: Mon Dec 22 16:11:54 2014			TOTAL PAGE NO.: 6 OF 18

SAMSUNG PROPRIETARY
THIS DOCUMENT CONTAINS CONFIDENTIAL
PROPRIETARY INFORMATION THAT IS
SAMSUNG ELECTRONIS CO'S PROPRIETARY.
DO NOT DISCLOSE TO OR DUPLICATE FOR OTHERS
EXCEPT AS AUTHORIZED BY SAMSUNG.
Comply with the threshold of substances
which are specified in 0QA-2049

BLOCK NAME: high_nt14m_2015_union
BLK PAGE NO.: 7 OF 18

07.TUNER

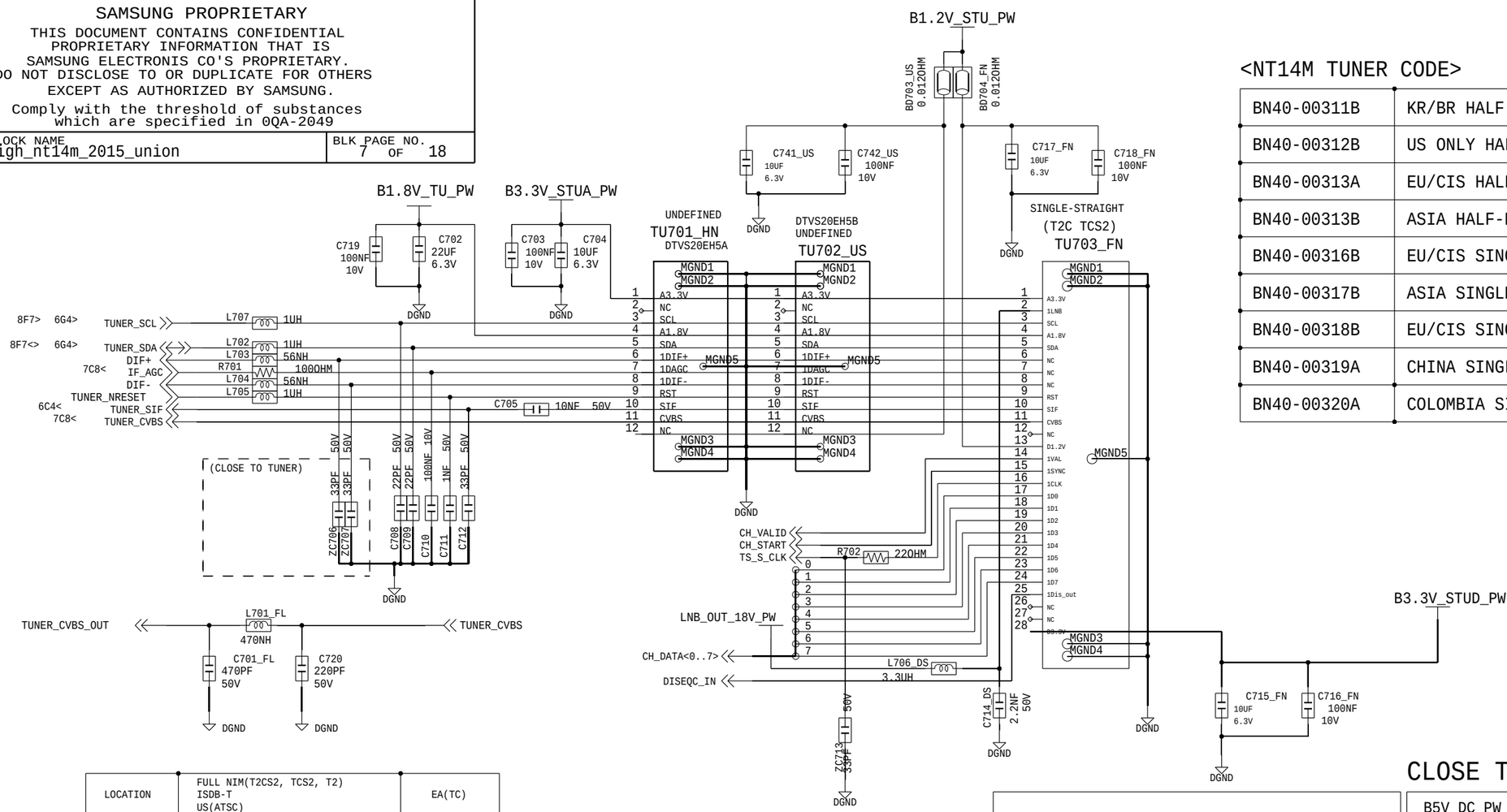

<NT14M TUNER CODE>

BN40-00311B	KR/BR HALF-NIM(ATSC/ISDB)
BN40-00312B	US ONLY HALF-NIM(ATSC) NXP
BN40-00313A	EU/CIS HALF-NIM(DVB-T/C)
BN40-00313B	ASIA HALF-NIM (DVB-T/C)
BN40-00316B	EU/CIS SINGLE NIM (DVB-T2/C)
BN40-00317B	ASIA SINGLE NIM (DVB-T2/C)
BN40-00318B	EU/CIS SINGLE NIM(DVB-T2/C/S2)
BN40-00319A	CHINA SINGLE NIM(DTMB)
BN40-00320A	COLOMBIA SINGLE NIM(DVB-T2)

LOCATION	FULL NIM(T2CS2, TCS2, T2) ISDB-T US(ATSC)	EA(TC)
C701_FL	2203-006842 (470PF)	2203-000585 (220PF)
L701_FL	2703-000213 (470NH)	2703-001229 (2.2UH)

LNB CONTROL PART(DVB-S OPTION)

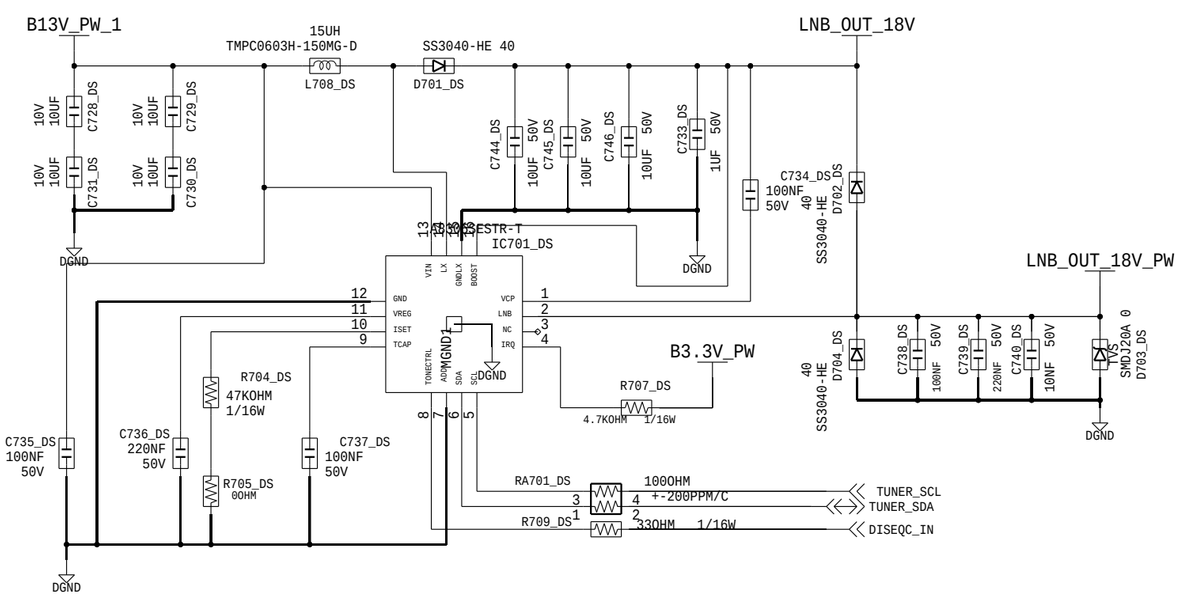

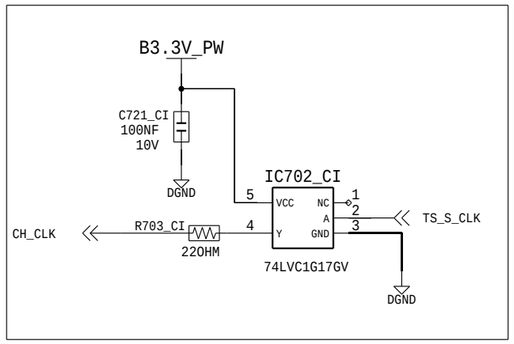

CLOSE TO TUNER

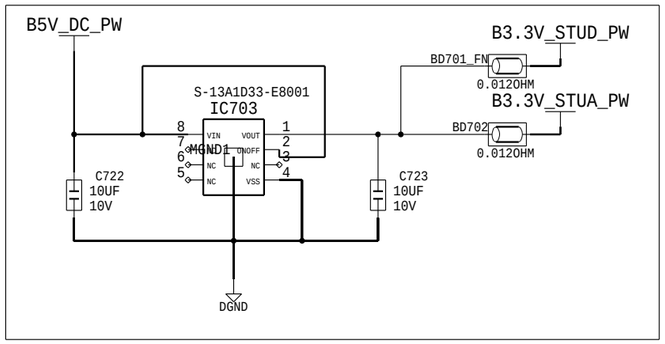

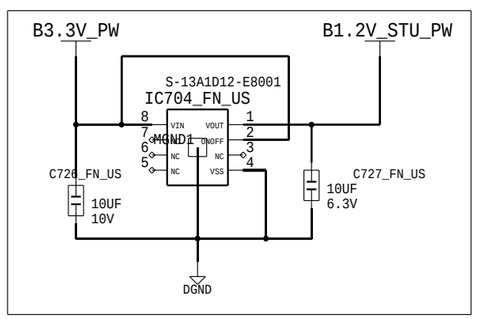

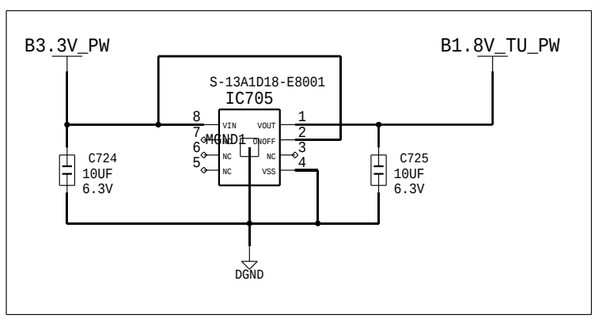

PROJECT NAME: high_nt14m_2015_union	A3	DRAWN BY: cjwha
		CHECKED BY: Unknown
SAMSUNG	DEV.STEP: @di_dev_step	REV.: 1.0
		APPROVED BY: Unknown
LAST EDITED TIME: Mon Dec 22 16:11:55 2014		TOTAL PAGE NO.: 7 OF 18

SAMSUNG PROPRIETARY
THIS DOCUMENT CONTAINS CONFIDENTIAL
PROPRIETARY INFORMATION THAT IS
SAMSUNG ELECTRONIS CO'S PROPRIETARY.
DO NOT DISCLOSE TO OR DUPLICATE FOR OTHERS
EXCEPT AS AUTHORIZED BY SAMSUNG.
Comply with the threshold of substances
which are specified in 0QA-2049

BLOCK NAME: high_nt14m_2015_union

08.CVBS/TS/JTAG

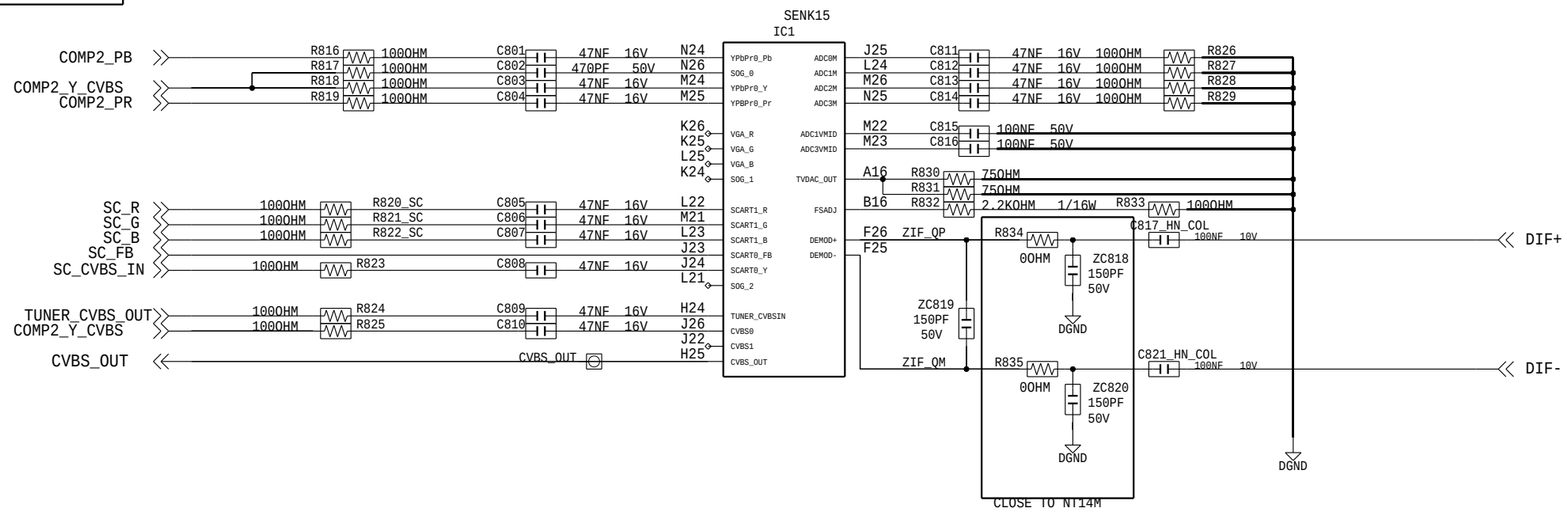

ARM_JTAG

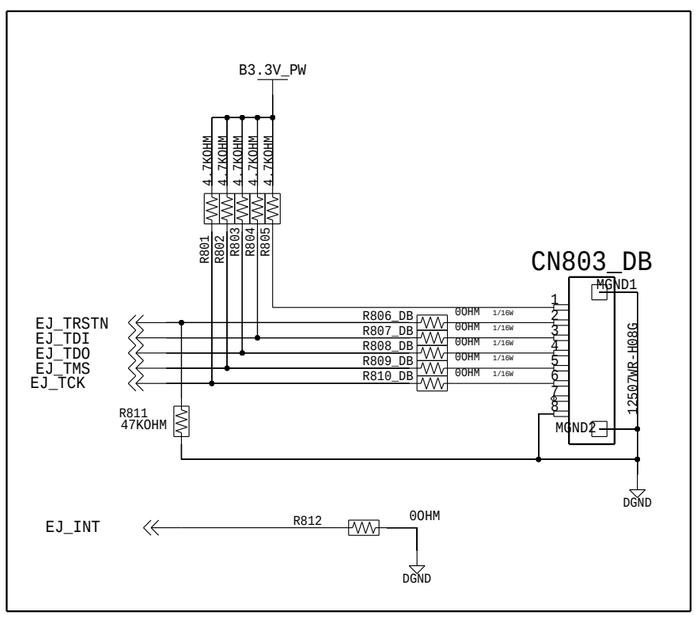

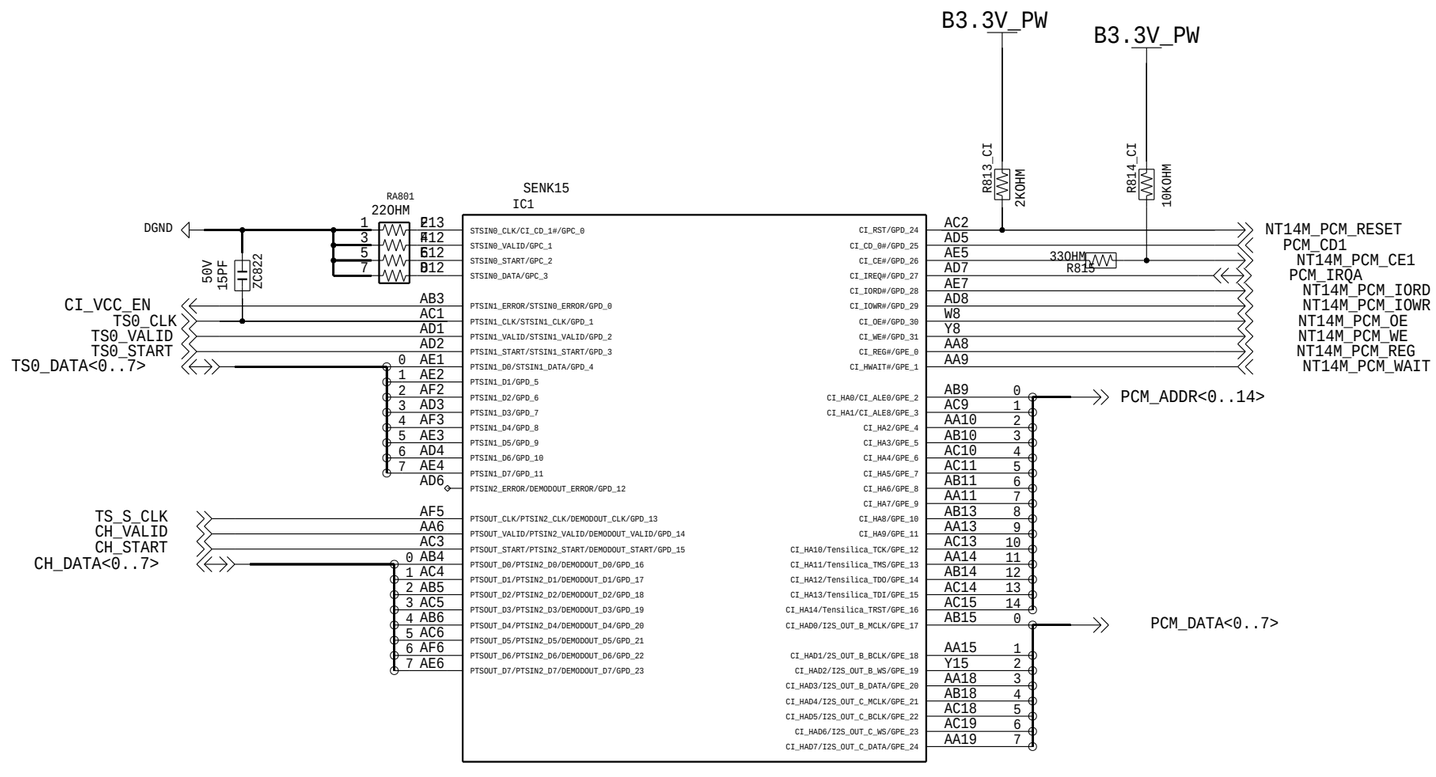

PROJECT NAME: high_nt14m_2015_union	A3	DRAWN BY: cjwha	
		CHECKED BY: Unknown	
SAMSUNG	DEV.STEP: @di_dev_step	REV.: 1.0	APPROVED BY: Unknown
LAST EDITED TIME: Mon Dec 22 16:11:55 2014			TOTAL PAGE NO. 8 OF 18

SAMSUNG PROPRIETARY
THIS DOCUMENT CONTAINS CONFIDENTIAL
PROPRIETARY INFORMATION THAT IS
SAMSUNG ELECTRONIS CO'S PROPRIETARY.
DO NOT DISCLOSE TO OR DUPLICATE FOR OTHERS
EXCEPT AS AUTHORIZED BY SAMSUNG.
Comply with the threshold of substances
which are specified in 0QA-2049

BLOCK NAME: high_nt14m_2015_union
BLK PAGE NO.: 9 OF 18

09.NT14 GPIO/MODE SELECT MAIN EEPROM/DEBUG

EEPROM

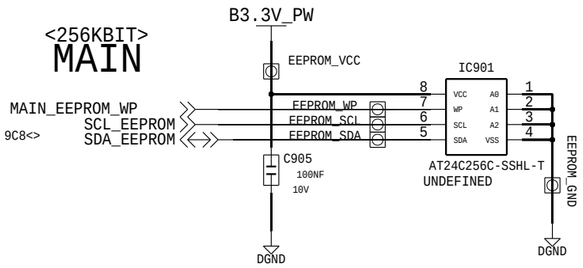

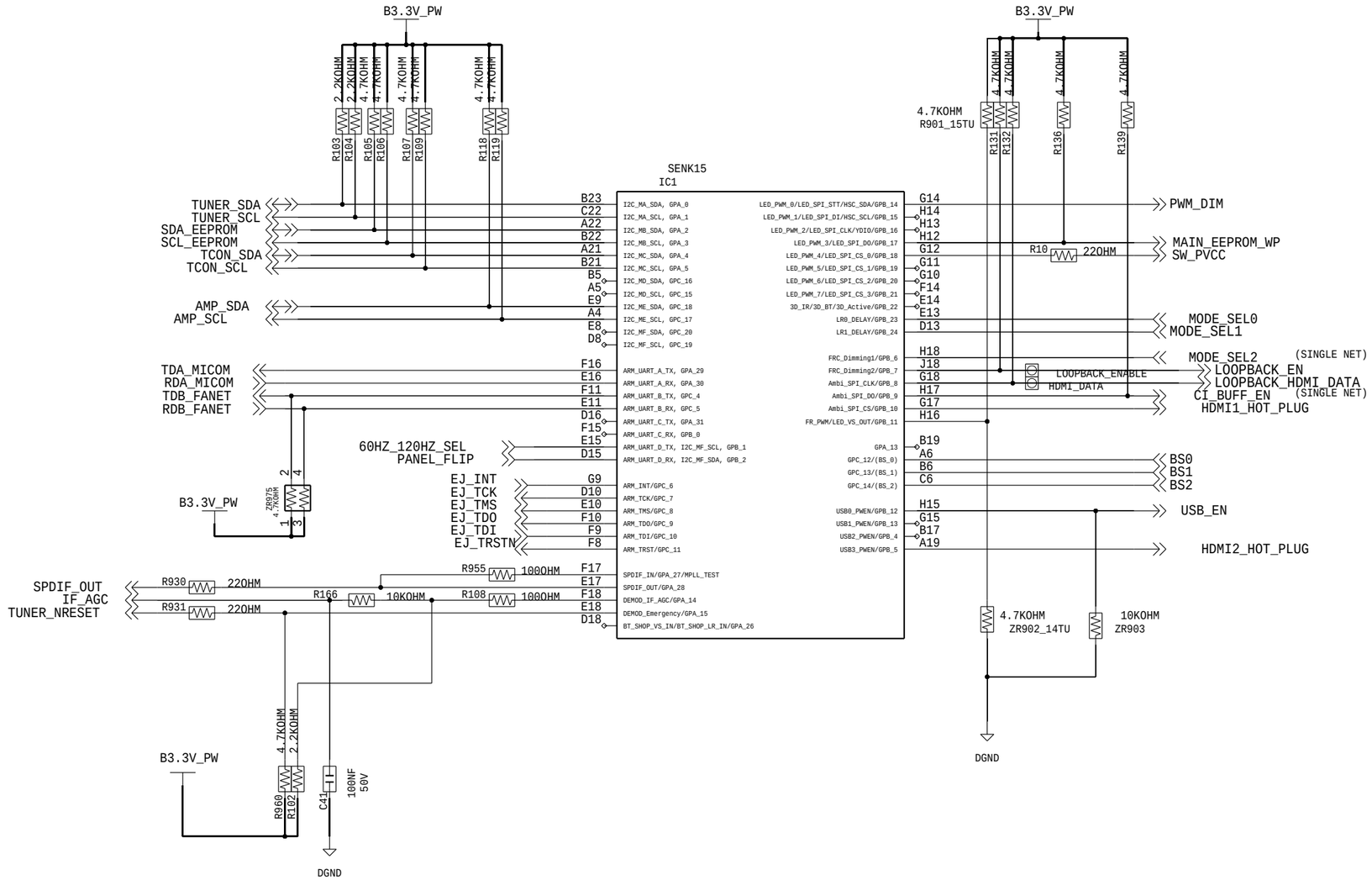

SELECT 60HZ/120HZ

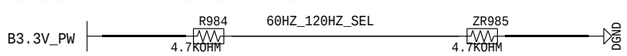

PULL UP : 60HZ
PULL DOWN : 120HZ

MODE_SEL

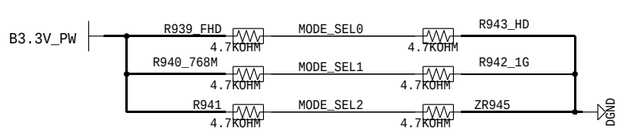

MODE_SEL0 : HIGH - FHD / LOW HD
MODE_SEL1 : HIGH - 768M / LOW - 1G (DDR)
ATSC 1G / THE OTHERS 768M
MODE_SEL2 : HIGH - JEIDA / LOW VESA

FAST LOGO

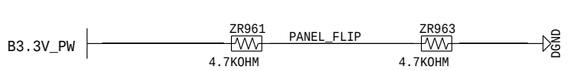

PANEL FLIP - HIGH : ON / LOW : OFF

PROJECT NAME: high_nt14m_2015_union	A3		DRAWN BY: cjwha
			CHECKED BY: Unknown
SAMSUNG	DEV.STEP: @di_dev_step@	REV.: 0.0	APPROVED BY: Unknown
LAST EDITED TIME: Mon Dec 22 16:12:02 2014			TOTAL PAGE NO.: 9 OF 18

SAMSUNG PROPRIETARY
THIS DOCUMENT CONTAINS CONFIDENTIAL
PROPRIETARY INFORMATION THAT IS
SAMSUNG ELECTRONIS CO'S PROPRIETARY.
DO NOT DISCLOSE TO OR DUPLICATE FOR OTHERS
EXCEPT AS AUTHORIZED BY SAMSUNG.
Comply with the threshold of substances
which are specified in 0QA-2049

BLOCK NAME: high_nt14m_2015_union

BLK PAGE NO.: 10 OF 18

10.NT14 POWER/GND

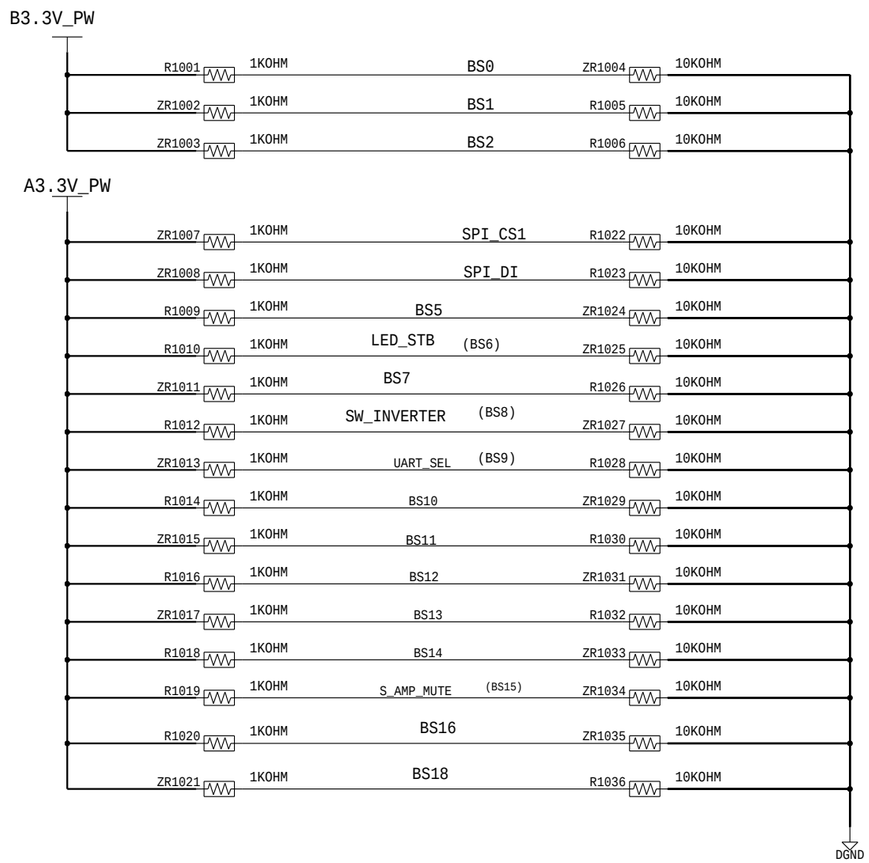

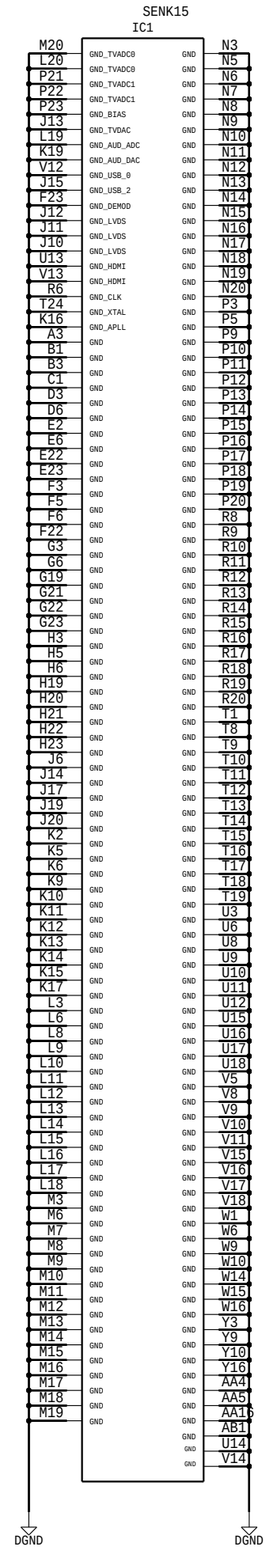

PROJECT NAME: high_nt14m_2015_union	A3		DRAWN BY: cjwha
			CHECKED BY: Unknown
SAMSUNG	DEV.STEP: @di_dev_step	REV.: @.0	APPROVED BY: Unknown
LAST EDITED TIME: Mon Dec 22 16:12:04 2014			TOTAL PAGE NO.: 10 OF 18

SAMSUNG PROPRIETARY
THIS DOCUMENT CONTAINS CONFIDENTIAL
PROPRIETARY INFORMATION THAT IS
SAMSUNG ELECTRONIS CO'S PROPRIETARY.
DO NOT DISCLOSE TO OR DUPLICATE FOR OTHERS
EXCEPT AS AUTHORIZED BY SAMSUNG.
Comply with the threshold of substances
which are specified in 0QA-2049

BLOCK NAME: high_nt14m_2015_union
BLK PAGE NO.: 11 OF 18

11.NT14 POWER / GND

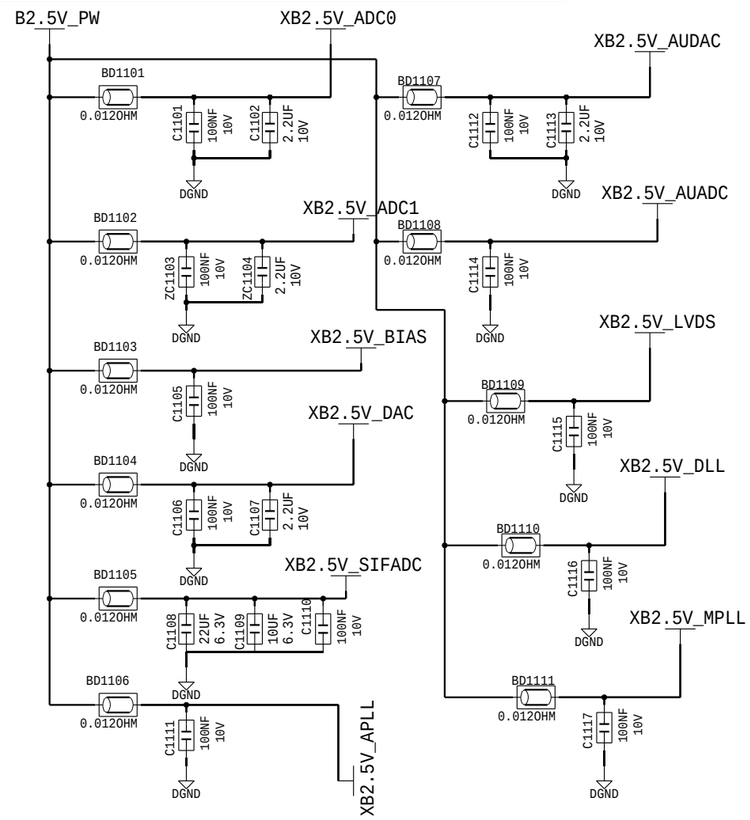

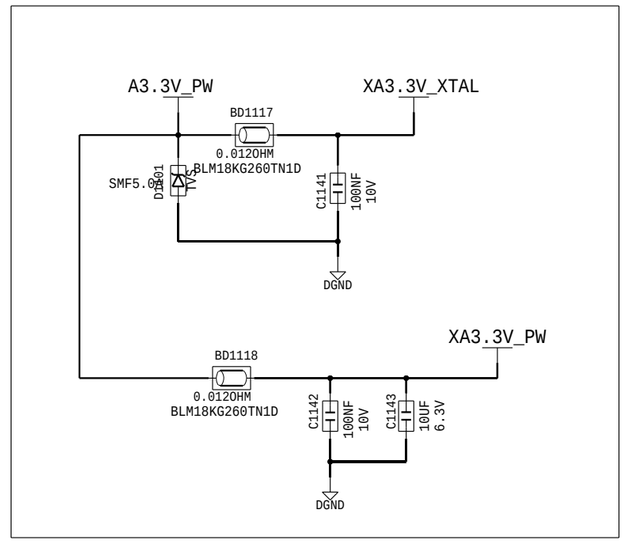

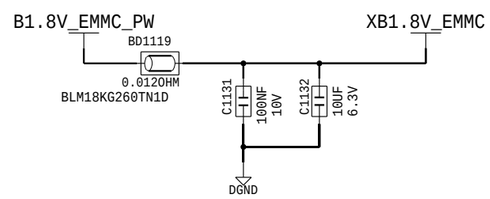

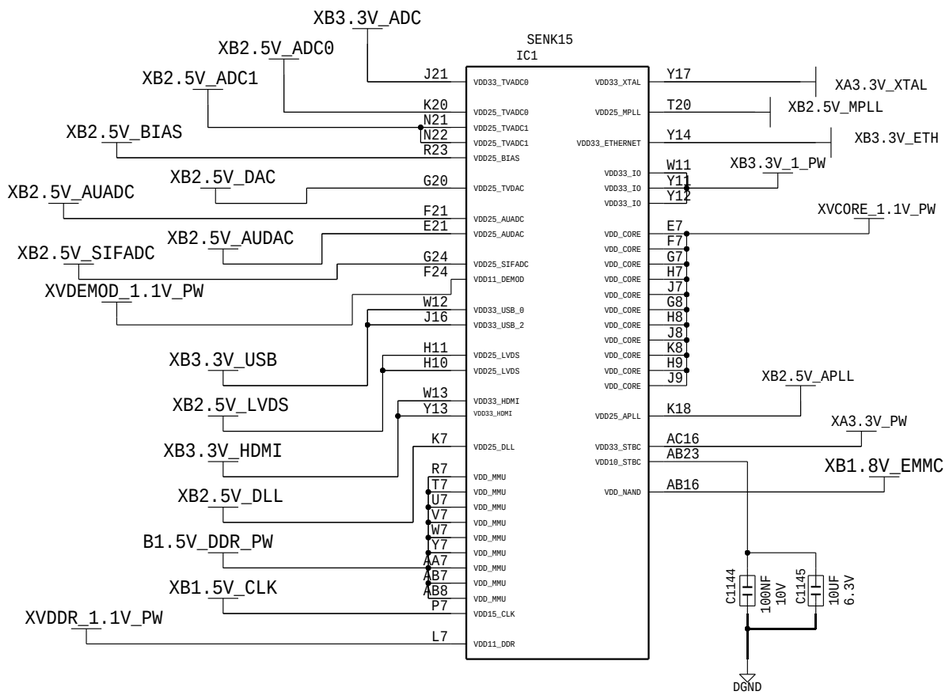

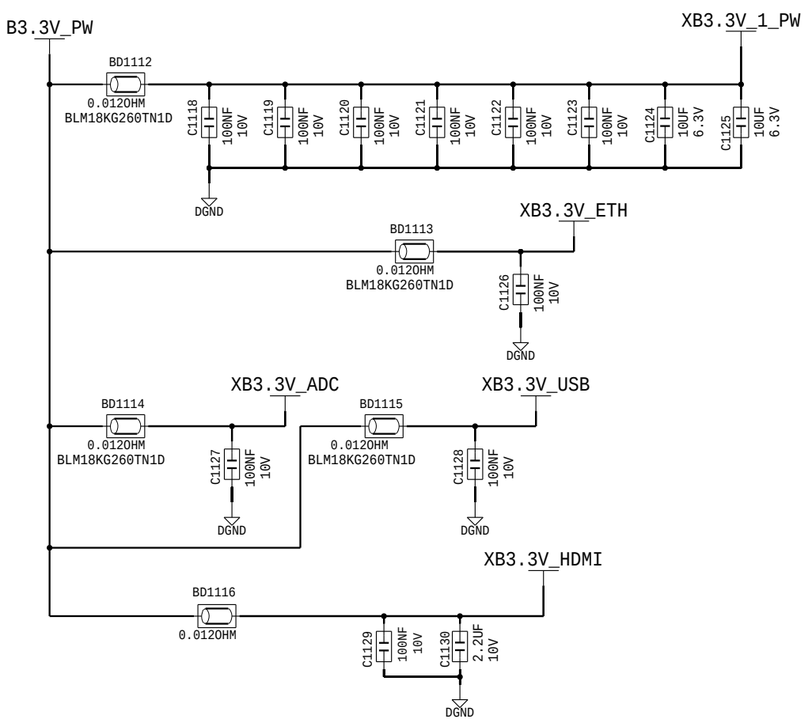

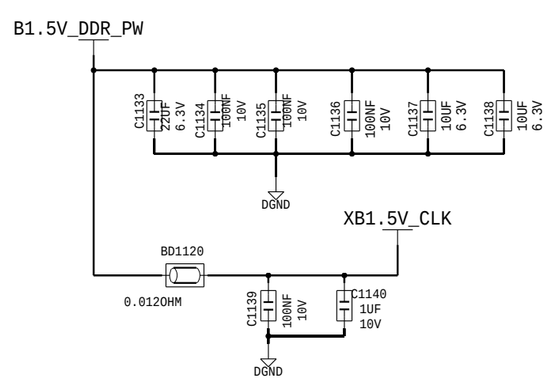

CLOSE TO NOVATEK IC

PROJECT NAME: high_nt14m_2015_union	A3	DRAWN BY: cjwha
		CHECKED BY: Unknown
SAMSUNG	DEV.STEP: @di_dev_step	REV.: @.0
		APPROVED BY: Unknown
LAST EDITED TIME: Mon Dec 22 16:11:58 2014		TOTAL PAGE NO.: 11 OF 18

SAMSUNG PROPRIETARY
THIS DOCUMENT CONTAINS CONFIDENTIAL
PROPRIETARY INFORMATION THAT IS
SAMSUNG ELECTRONIS CO'S PROPRIETARY.
DO NOT DISCLOSE TO OR DUPLICATE FOR OTHERS
EXCEPT AS AUTHORIZED BY SAMSUNG.
Comply with the threshold of substances
which are specified in 0QA-2049

12.NT14 DDR / DDR3 MEMORY

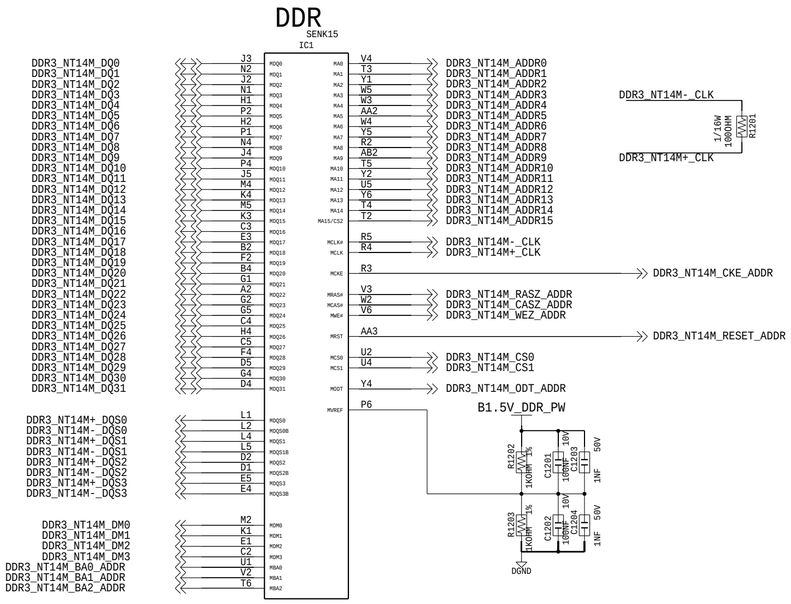

DDR3_B_512M(1600)-1105-002529_MIU1

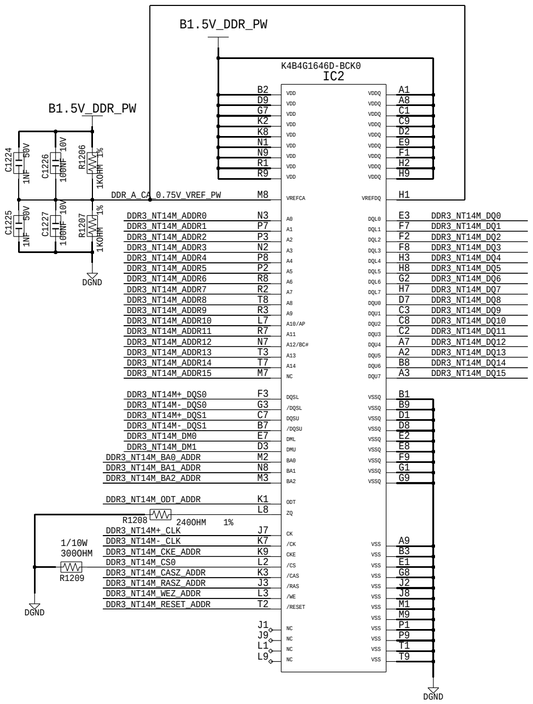

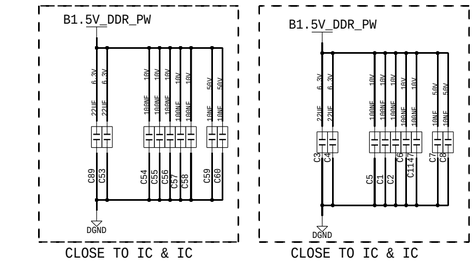

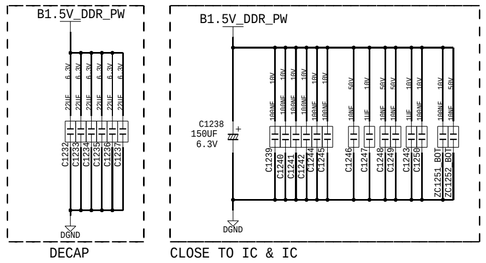

DDR3_B_256M(1600)-1105-002527_MIU1_THE OTHERS
DDR3_B_512M(1600)-1105-002529_MIU1_ATSC

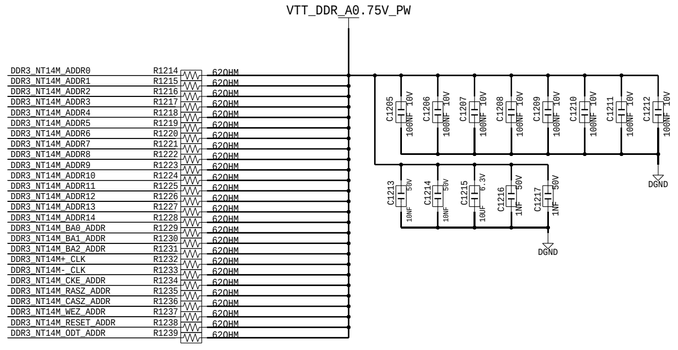

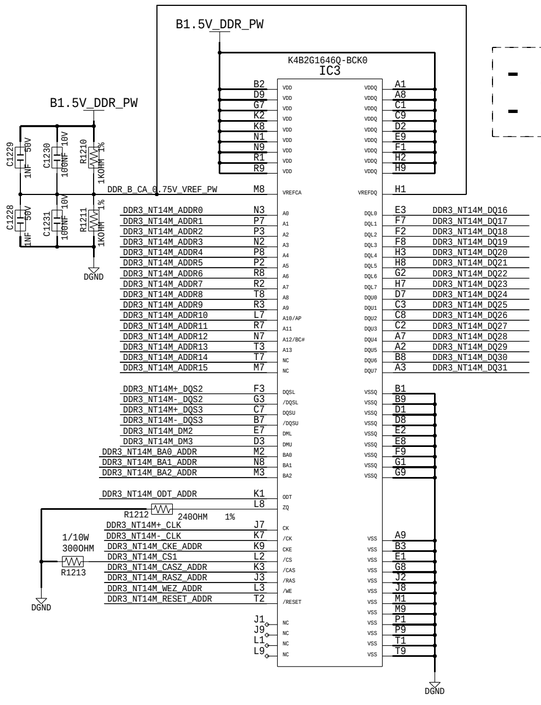

- ATSC DDR 1G(512+512)
- OTHERS DDR 768M(512+256)

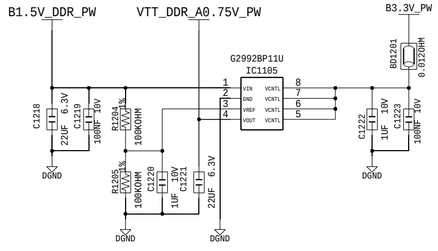

SAMSUNG PROPRIETARY
THIS DOCUMENT CONTAINS CONFIDENTIAL
PROPRIETARY INFORMATION THAT IS
SAMSUNG ELECTRONIS CO'S PROPRIETARY.
DO NOT DISCLOSE TO OR DUPLICATE FOR OTHERS
EXCEPT AS AUTHORIZED BY SAMSUNG.
Comply with the threshold of substances
which are specified in 0QA-2049

BLOCK NAME: high_nt14m_2015_union
BLK PAGE NO.: 13 OF 18

13.SUB MICOM FUNCTION / RS232C

RESET

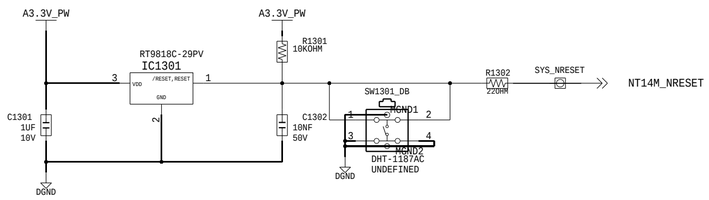

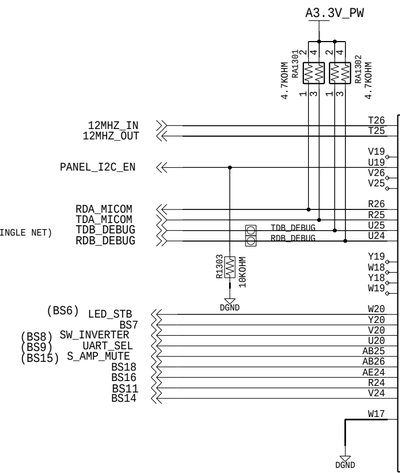

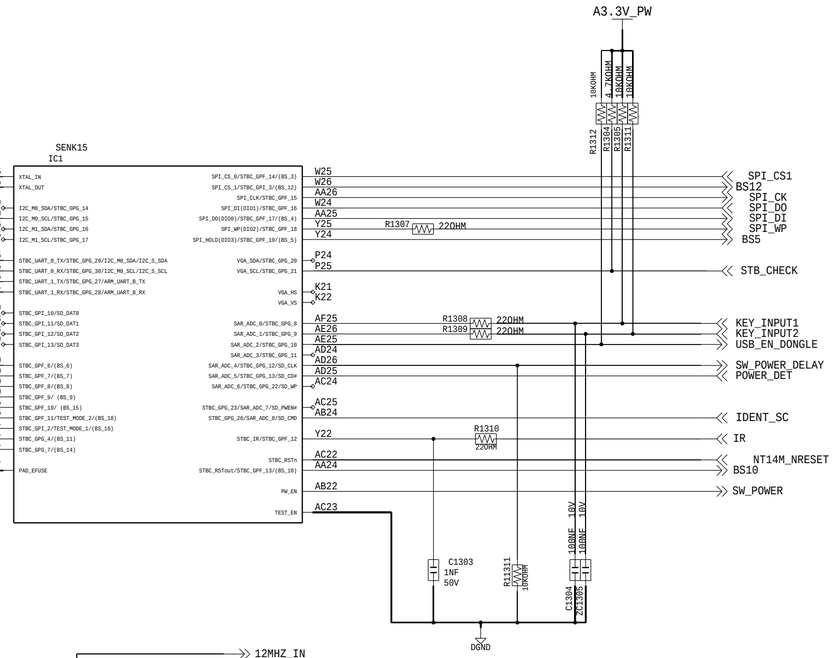

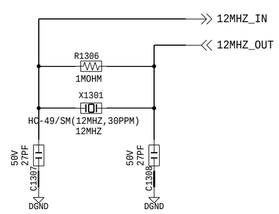

FUNCTION_WIFI

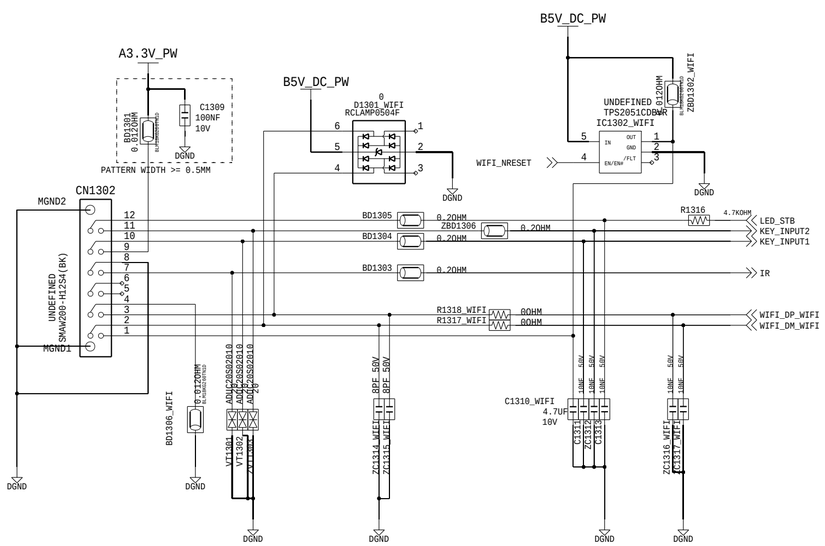

RS232 DEBUG

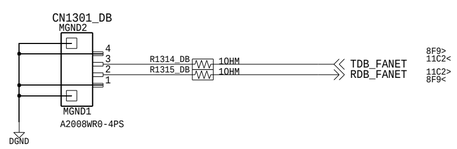

PROJECT NAME: high_nt14m_2015_union		A2	DRAWN BY: cjwha
			CHECKED BY: Unknown
SAMSUNG	DEV.STEP: @di_dev_step	REV.: 1.0	APPROVED BY: Unknown
LAST EDITED TIME: Mon Dec 22 16:11:59 2014			TOTAL PAGE NO.: 13 OF 18

SAMSUNG PROPRIETARY
THIS DOCUMENT CONTAINS CONFIDENTIAL
PROPRIETARY INFORMATION THAT IS
SAMSUNG ELECTRONIS CO'S PROPRIETARY.
DO NOT DISCLOSE TO OR DUPLICATE FOR OTHERS
EXCEPT AS AUTHORIZED BY SAMSUNG.
Comply with the threshold of substances
which are specified in 0QA-2049

BLOCK NAME: high_nt14m_2015_union
BLK PAGE NO.: 14 OF 18

14.LED DRIVER

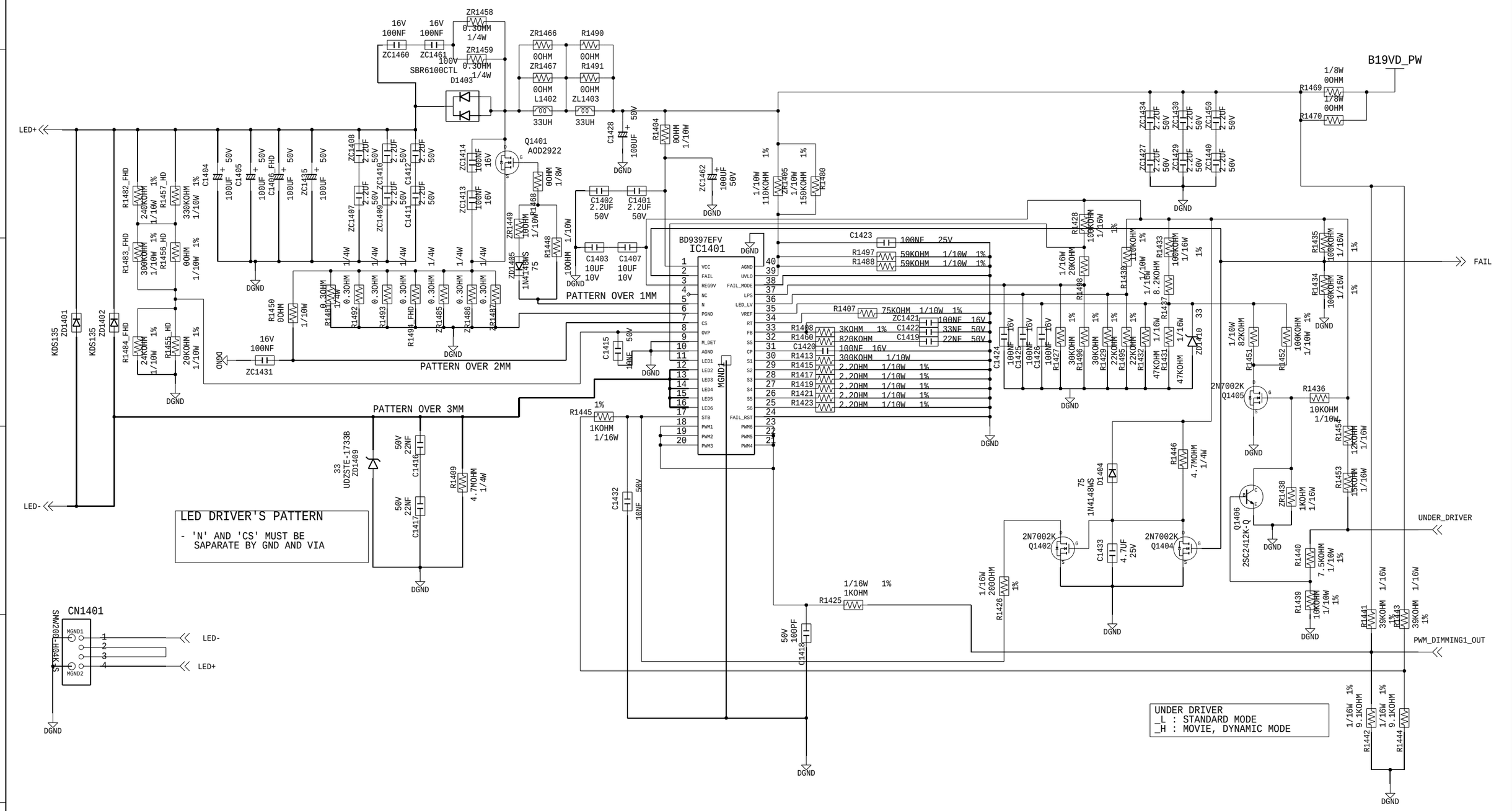

PROJECT NAME: high_nt14m_2015_union	A3		DRAWN BY: cjwha
			CHECKED BY: Unknown
SAMSUNG	DEV.STEP: @di_dev_step	REV.: @.0	APPROVED BY: Unknown
LAST EDITED TIME: Mon Dec 22 16:12:04 2014			TOTAL PAGE NO.: 14 OF 18

SAMSUNG PROPRIETARY
THIS DOCUMENT CONTAINS CONFIDENTIAL
PROPRIETARY INFORMATION THAT IS
SAMSUNG ELECTRONIS CO'S PROPRIETARY.
DO NOT DISCLOSE TO OR DUPLICATE FOR OTHERS
EXCEPT AS AUTHORIZED BY SAMSUNG.
Comply with the threshold of substances
which are specified in 0QA-2049

BLOCK NAME: high_nt14m_2015_union
BLK PAGE NO.: 15 OF 18

15.NT14 LVDS / AUDIO / LAN

LVDS

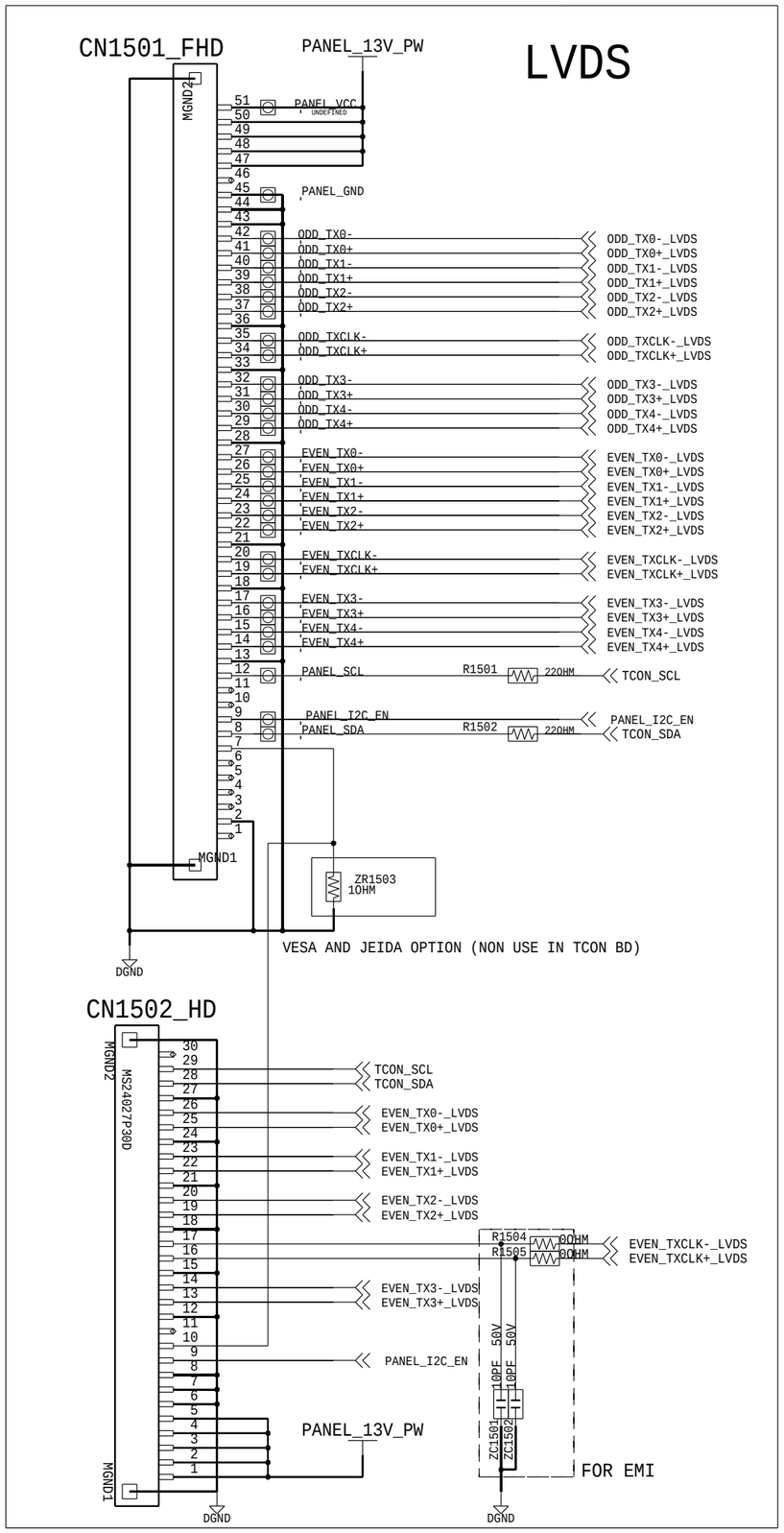

AUDIO

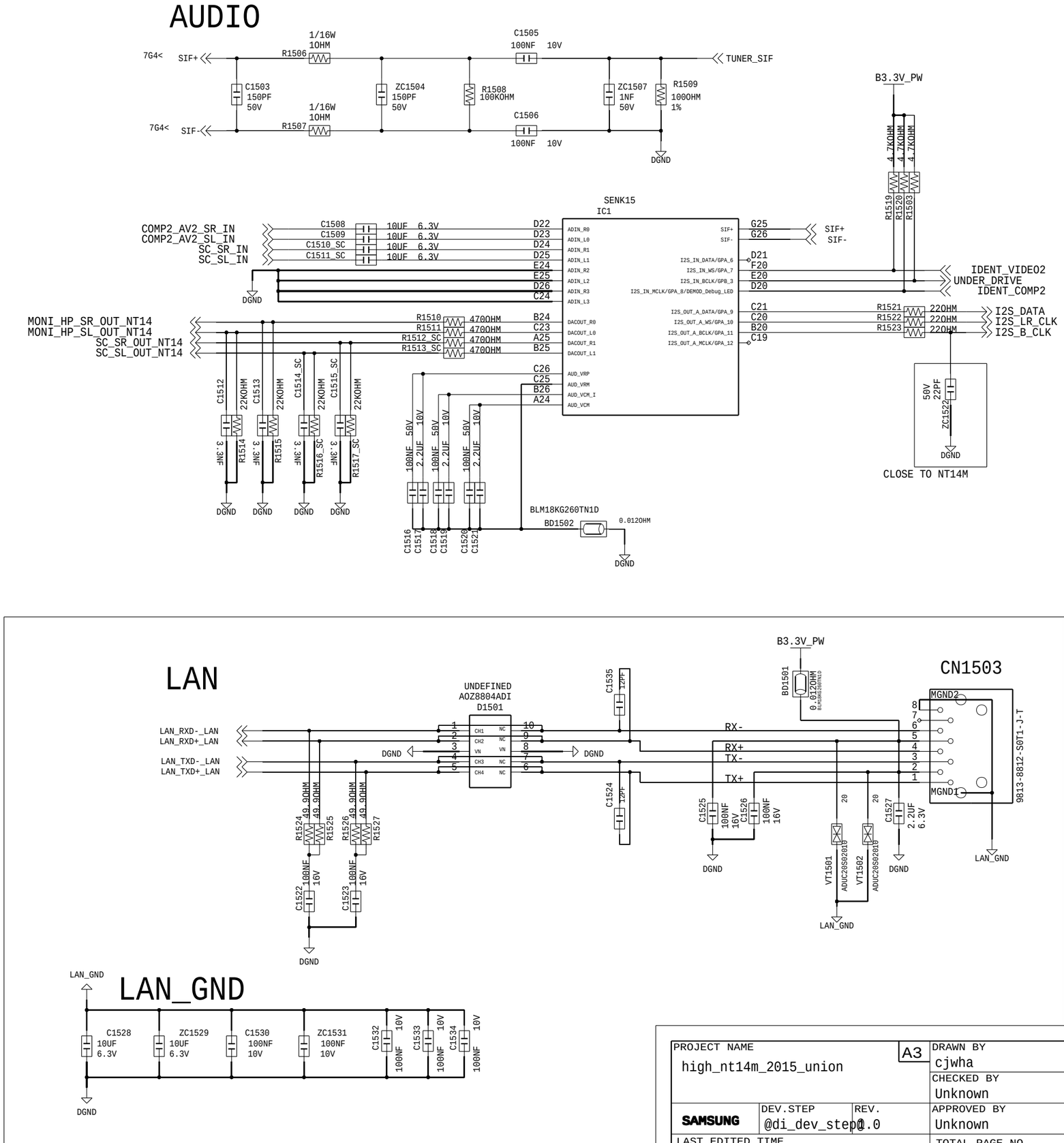

LAN

LAN_GND

PROJECT NAME: high_nt14m_2015_union	A3		DRAWN BY: cjwha
			CHECKED BY: Unknown
SAMSUNG	DEV.STEP: @di_dev_step	REV.: 1.0	APPROVED BY: Unknown
LAST EDITED TIME: Mon Dec 22 16:11:56 2014			TOTAL PAGE NO.: 15 OF 18

SAMSUNG PROPRIETARY
THIS DOCUMENT CONTAINS CONFIDENTIAL
PROPRIETARY INFORMATION THAT IS
SAMSUNG ELECTRONIS CO'S PROPRIETARY.
DO NOT DISCLOSE TO OR DUPLICATE FOR OTHERS
EXCEPT AS AUTHORIZED BY SAMSUNG.
Comply with the threshold of substances
which are specified in 0QA-2049

BLOCK NAME: high_nt14m_2015_union
BLK PAGE NO.: 16 OF 18

16.NT14 USB

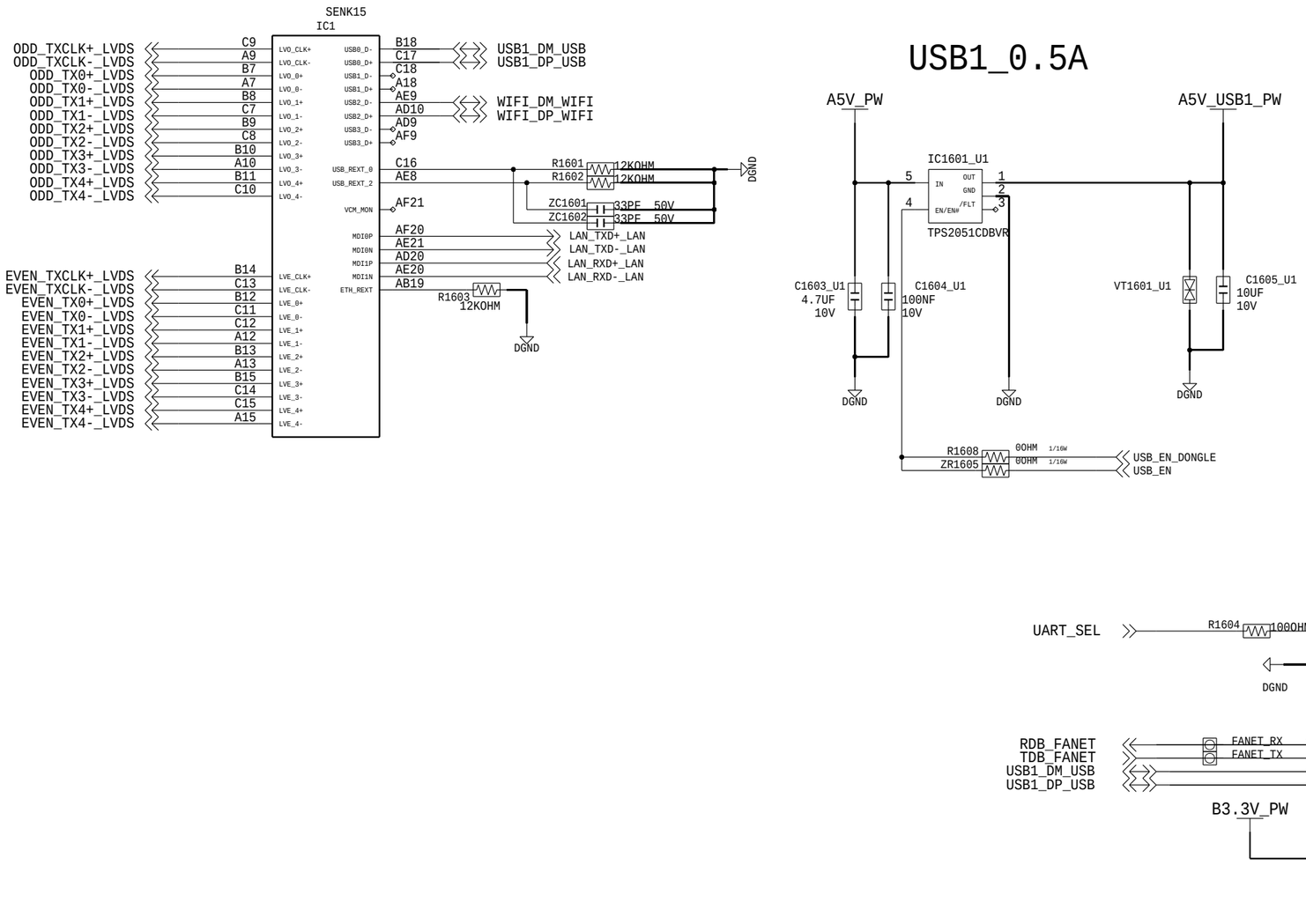

USB1_0.5A

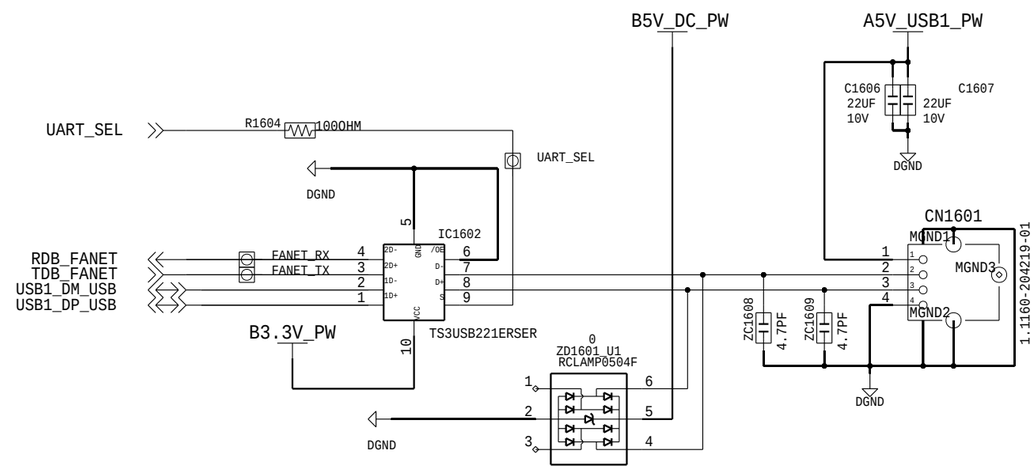

PROJECT NAME: high_nt14m_2015_union	A3	DRAWN BY: cjwha
		CHECKED BY: Unknown
SAMSUNG	DEV.STEP: @di_dev_step	REV.: 1.0
		APPROVED BY: Unknown
LAST EDITED TIME: Mon Dec 22 16:11:57 2014		TOTAL PAGE NO.: 16 OF 18

SAMSUNG PROPRIETARY
THIS DOCUMENT CONTAINS CONFIDENTIAL
PROPRIETARY INFORMATION THAT IS
SAMSUNG ELECTRONIS CO'S PROPRIETARY.
DO NOT DISCLOSE TO OR DUPLICATE FOR OTHERS
EXCEPT AS AUTHORIZED BY SAMSUNG.
Comply with the threshold of substances
which are specified in 0QA-2049

BLOCK NAME: high_nt14m_2015_union
BLK PAGE NO.: 17 OF 18

17.PCMCIA

PCMCIA

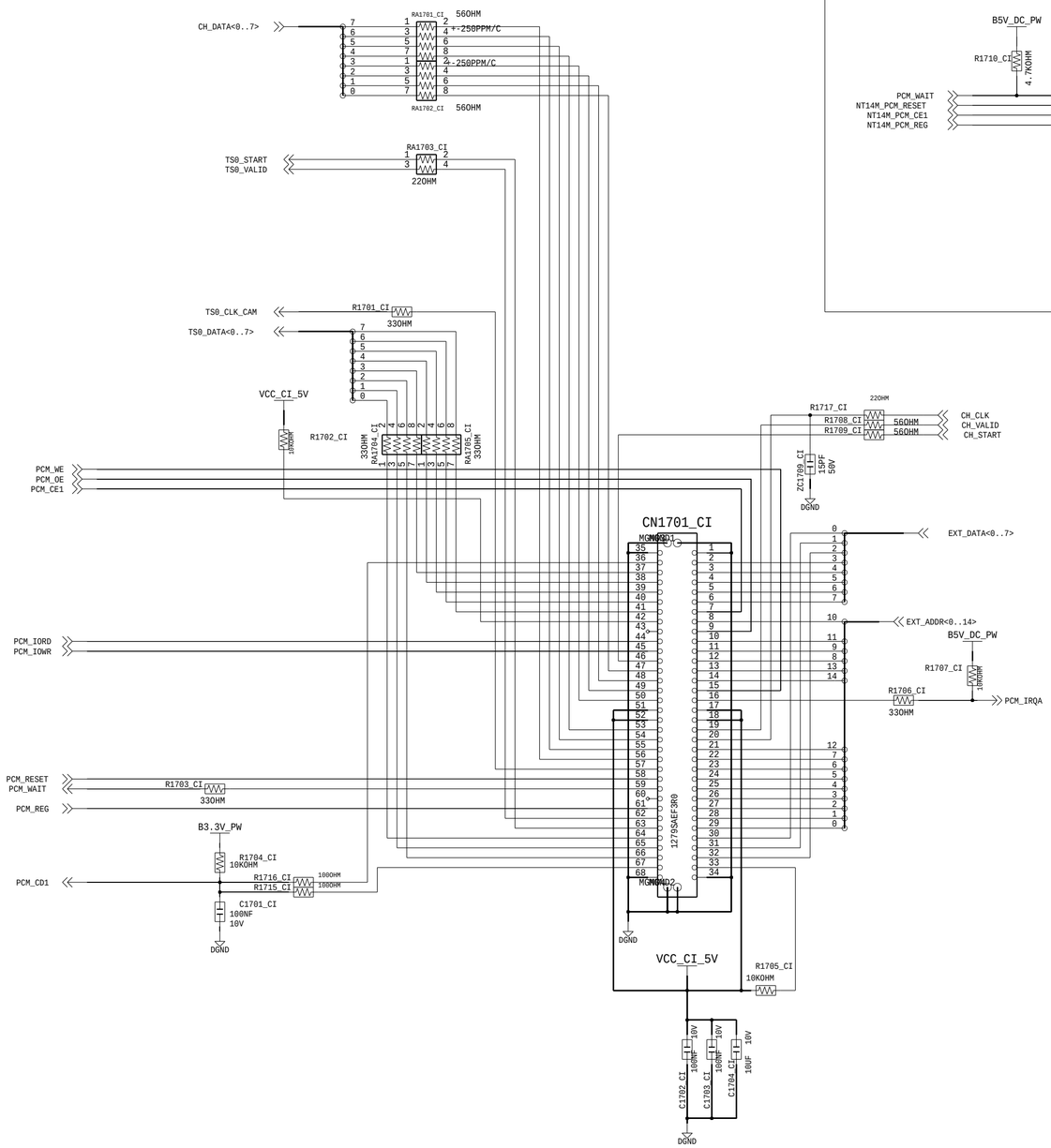

CI BUFFER

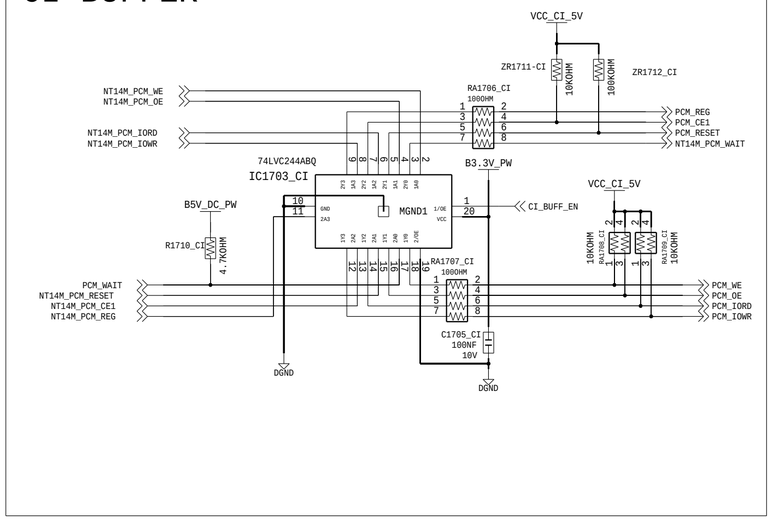

CI ADDRESS

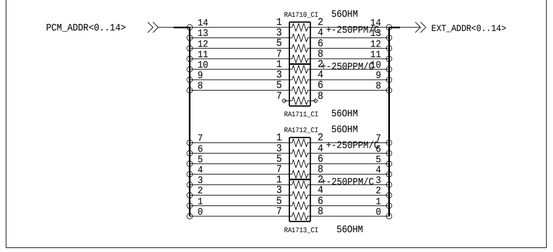

CI DATA

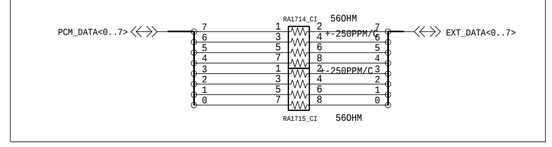

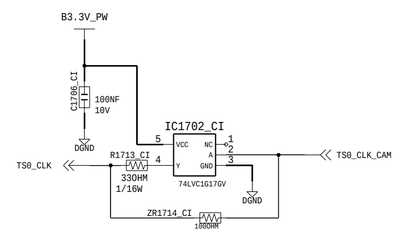

CI VCC CURRENT LIMIT DCDC

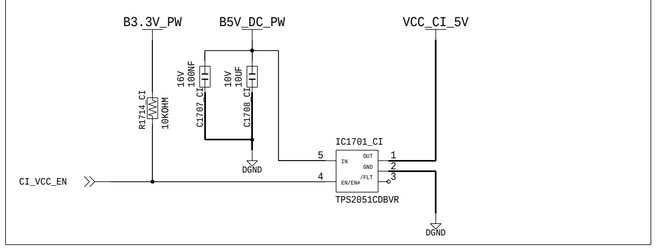

PROJECT NAME: high_nt14m_2015_union
A2
DRAWN BY: cjwha
CHECKED BY: Unknown
APPROVED BY: Unknown
SAMSUNG
DEV.STEP: @di_dev_step
REV.: 1.0
LAST EDITED TIME: Mon Dec 22 16:12:02 2014
TOTAL PAGE NO.: 17 OF 18

SAMSUNG PROPRIETARY
THIS DOCUMENT CONTAINS CONFIDENTIAL
PROPRIETARY INFORMATION THAT IS
SAMSUNG ELECTRONIS CO'S PROPRIETARY.
DO NOT DISCLOSE TO OR DUPLICATE FOR OTHERS
EXCEPT AS AUTHORIZED BY SAMSUNG.
Comply with the threshold of substances
which are specified in 0QA-2049

BLOCK NAME: high_nt14m_2015_union
BLK PAGE NO.: 18 OF 18

18.NT14 EMMC / SPI FLASH

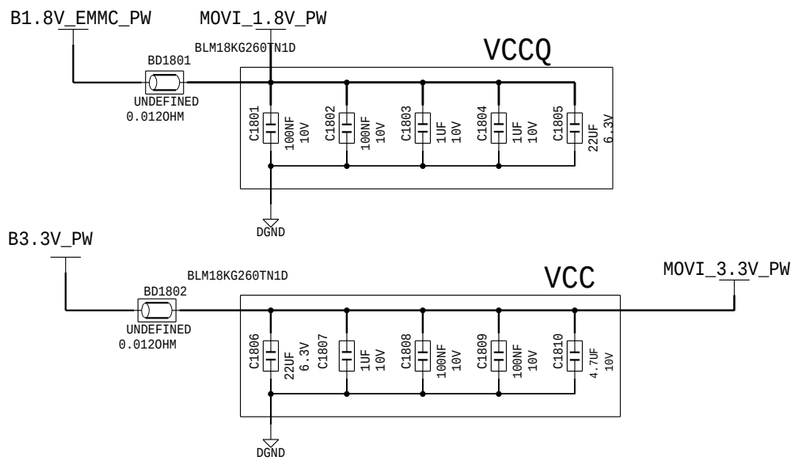

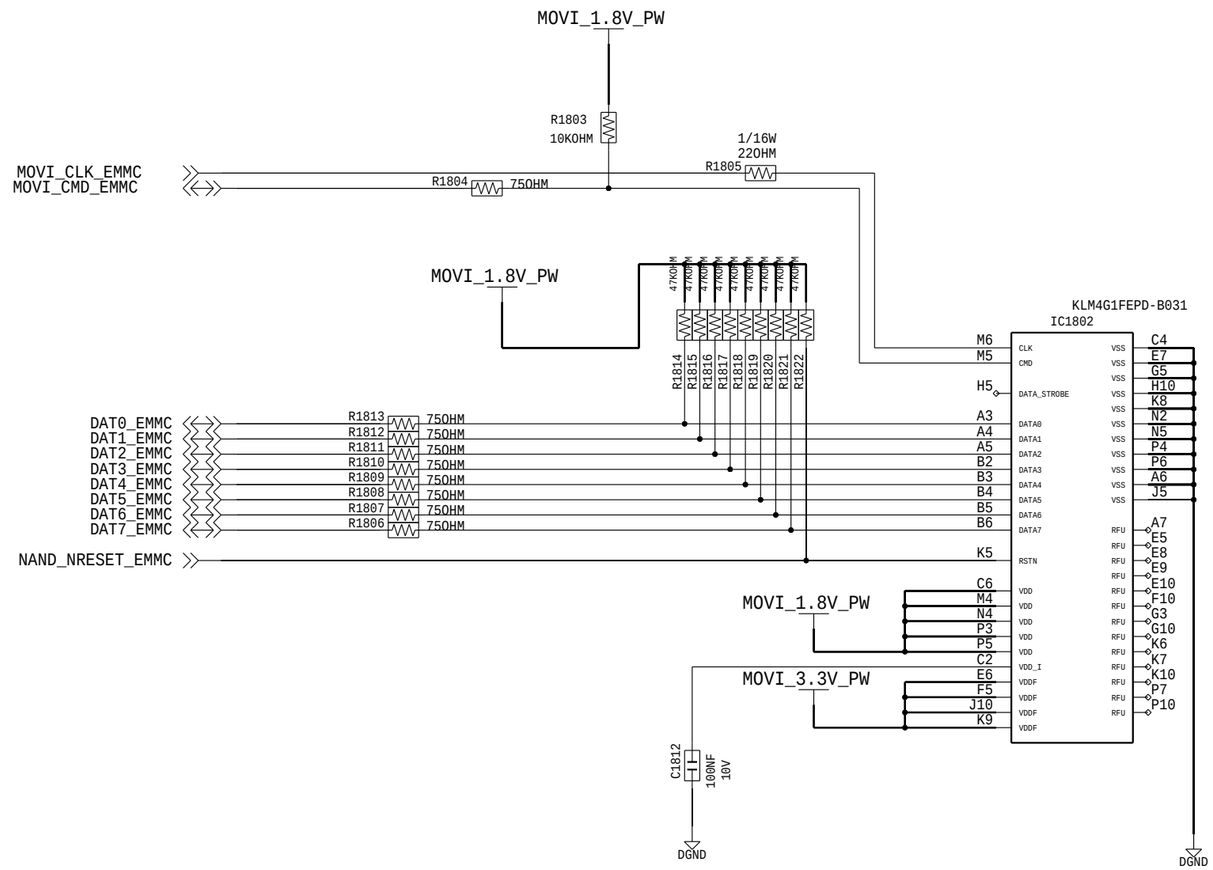

SPI FLASH

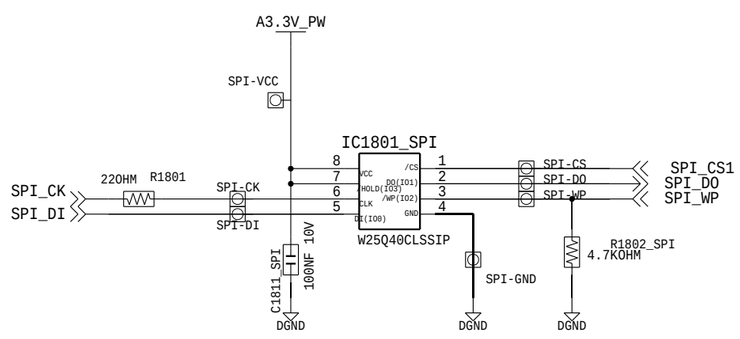

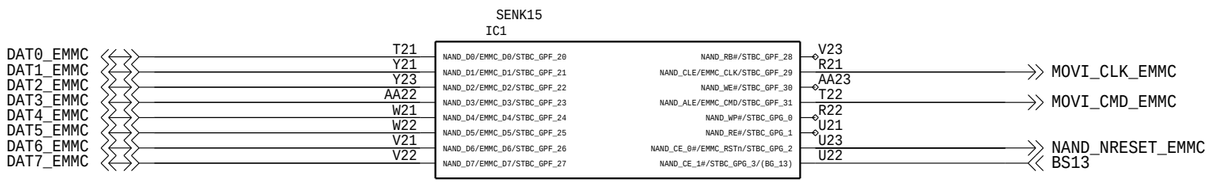

PROJECT NAME: high_nt14m_2015_union	A3	DRAWN BY: cjwha
		CHECKED BY: Unknown
SAMSUNG	DEV.STEP: @di_dev_step@ / REV.: 1.0	APPROVED BY: Unknown
LAST EDITED TIME: Mon Dec 22 16:12:03 2014		TOTAL PAGE NO.: 18 OF 18