4. Troubleshooting

4-1. Troubleshooting

1. Check the various cable connections first.
   - Check to see if there is a burnt or damaged cable.
   - Check to see if there is a disconnected or loose cable connection.
   - Check to see if the cables are connected according to the connection diagram.
2. Check the power input to the Main Board.
   Check internal Pattern lola3 if fhere is some picture noise.
   Factory mode(Info-MENU-Mute-power on → Advanced menu → MST69A84HQ → Pattern select : Off
   Press right button of Remocon.
   If lola3 NG, Chahge the Main Board.

4-1-1. No Power

Symptom	– The LEDs on the front panel do not work when connecting the power cord. – The SMPS relay does not work when connecting the power cord. – The units appears to be dead.
Major checkpoints	The IP relay or the LEDs on the front panel does not work when connecting the power cord if the cables are improperly connected or the Main Board or SMPS is not functioning. In this case, check the following: – Check the internal cable connection status inside the unit. – Check the fuses of each part. – Check the output voltage of SMPS. – Replace the Main Board.
Diagnostics	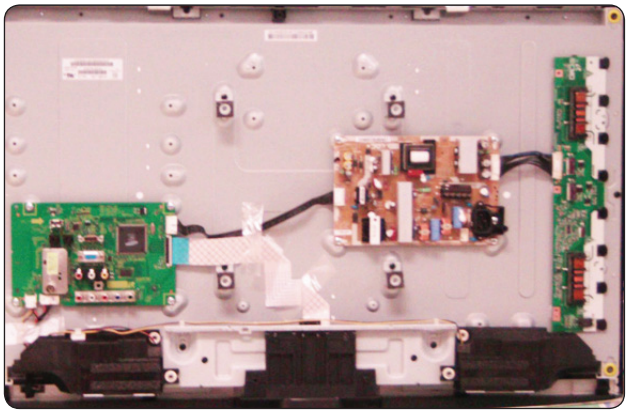 LAMP off, power indicator LED red color? → No → Check a connection a power cable. ↓ Yes Does proper DC5V appear at pin 6 of CN1001? → No → Change a Assy PCB Power. ↓ Yes Does proper DC A3.3V appear at R1111? → No → Check a IC1106 Change a main PCB ass'y ↓ Yes Does proper DC A2.5V, A1.2V appear at R1110, C1116? → No → Check a IC1105, IC1107 Change a main PCB ass'y ↓ Yes A power is supplied to set?
Caution	Make sure to disconnect the power before working on the IP board.

Main Board

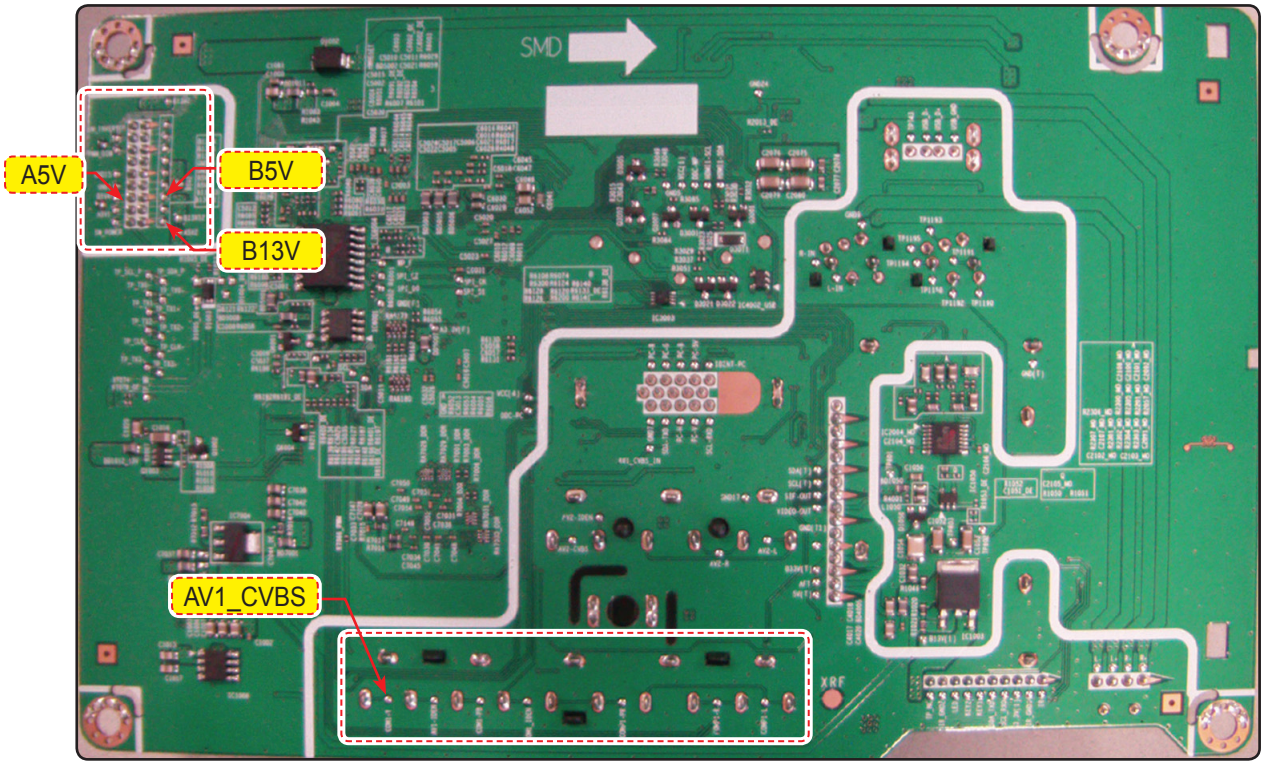

4-1-2. No Video (Analog PC signal)

Symptom	– Audio is normal but no picture is displayed on the screen.
Major checkpoints	– Check the PC source – Check the M-star – This may happen when the LVDS cable connecting the Main Board and the Panel is disconnected.
Diagnostics	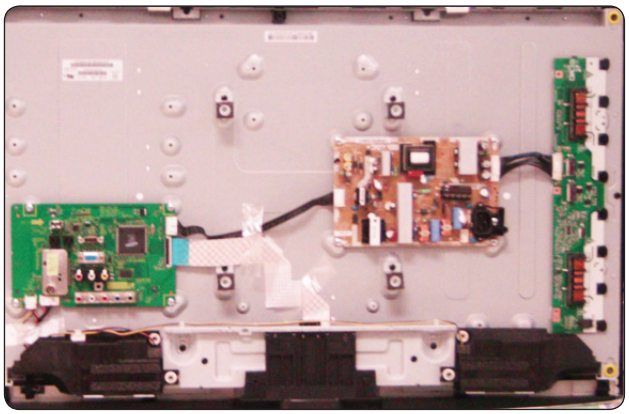 Power Indicator is off. Lamp on, no video. ↓ Yes Check a PC source and check the connection of DSUB cable? → No → Input a analog PC signal and connected cable(DPMS). ↓ Yes Does the signal appear at R4059, R4058, R4056, R4061, R4060(R,G,B,H,V) of IC4000? → No → PC cable change a PC cable. Change a main PCB ass'y. ↓ Yes Does the digital data appear at the output of LVDS Cable? → No → Check a IC4000. Change a main PCB ass'y ↓ Yes Check a LVDS cable? Replace a lcd panel? ↓ Yes Please, Call to Samsung Co. LTD.
Caution	Make sure to disconnect the power before working on the IP board.

Main Board

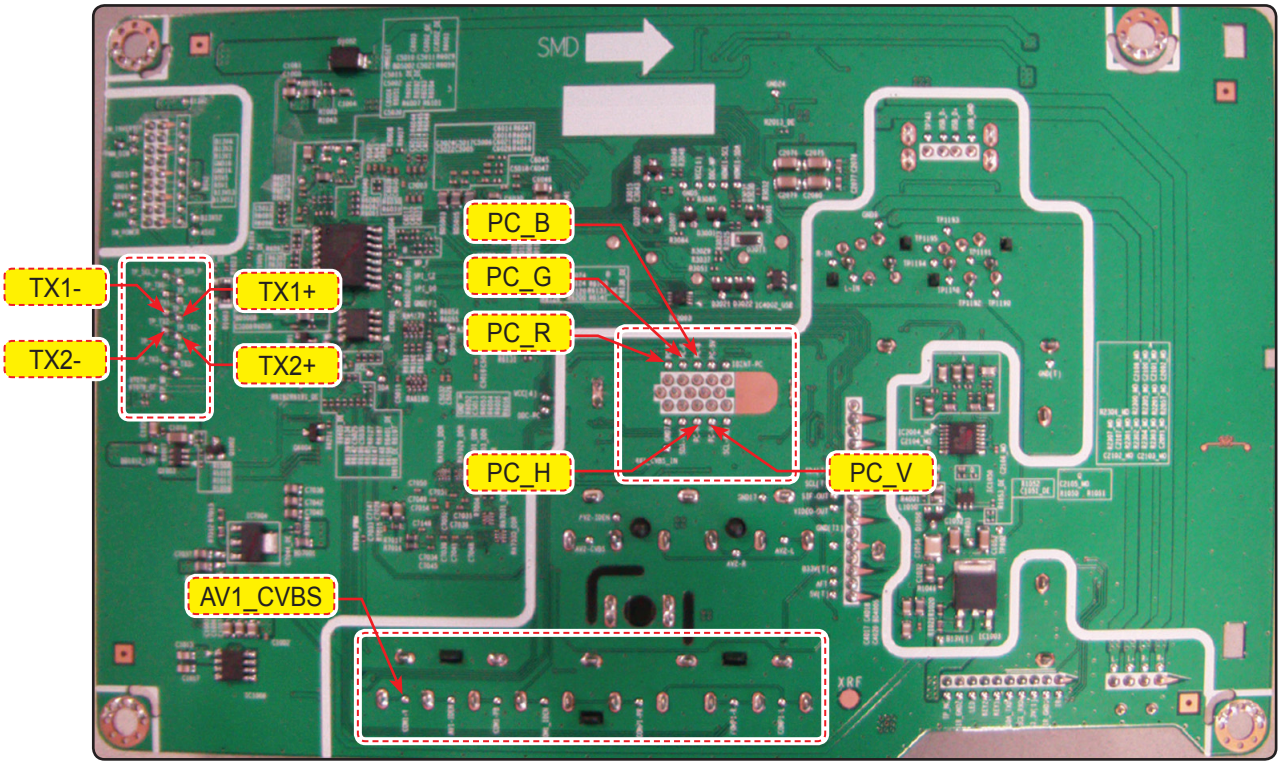

■ WAVEFORMS

❶	**R,G,B Output Signal**

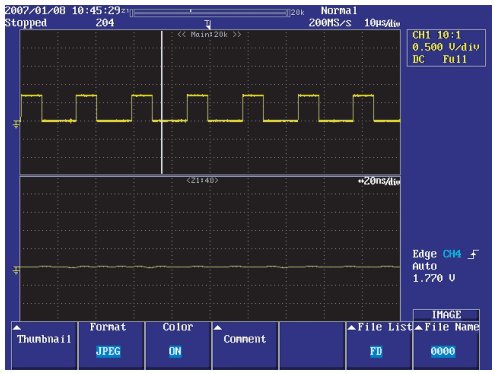

4-1-3. No Video (HDMI - Digital Signal)

Symptom	– Audio is normal but no picture is displayed on the screen.
Major checkpoints	– Check the HDMI source – Check the M-star – This may happen when the LVDS cable connecting the Main Board and the Panel is disconnected.
Diagnostics	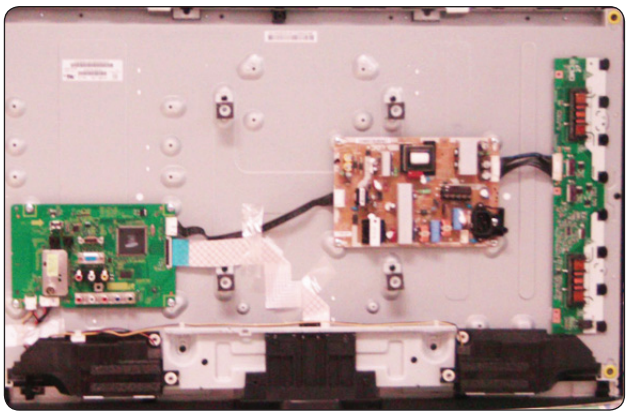 Power Indicator is off. Lamp on, no video. ↓ Yes Check the connection of HDMI cable? → No → Input a HDMI cable. ↓ Yes Does the digital data appear at R4065~R4072? → No → Check a IC4000. Change a main PCB ass'y. ↓ Yes Does the digital data appear at output of LVDS Cable? → No → Check a IC4000. Change a main PCB ass'y. ↓ Yes Check the LVDS cable? Replace the LCD panel? ↓ Yes Please, Contact Tech support
Caution	Make sure to disconnect the power before working on the IP board.

Main Board

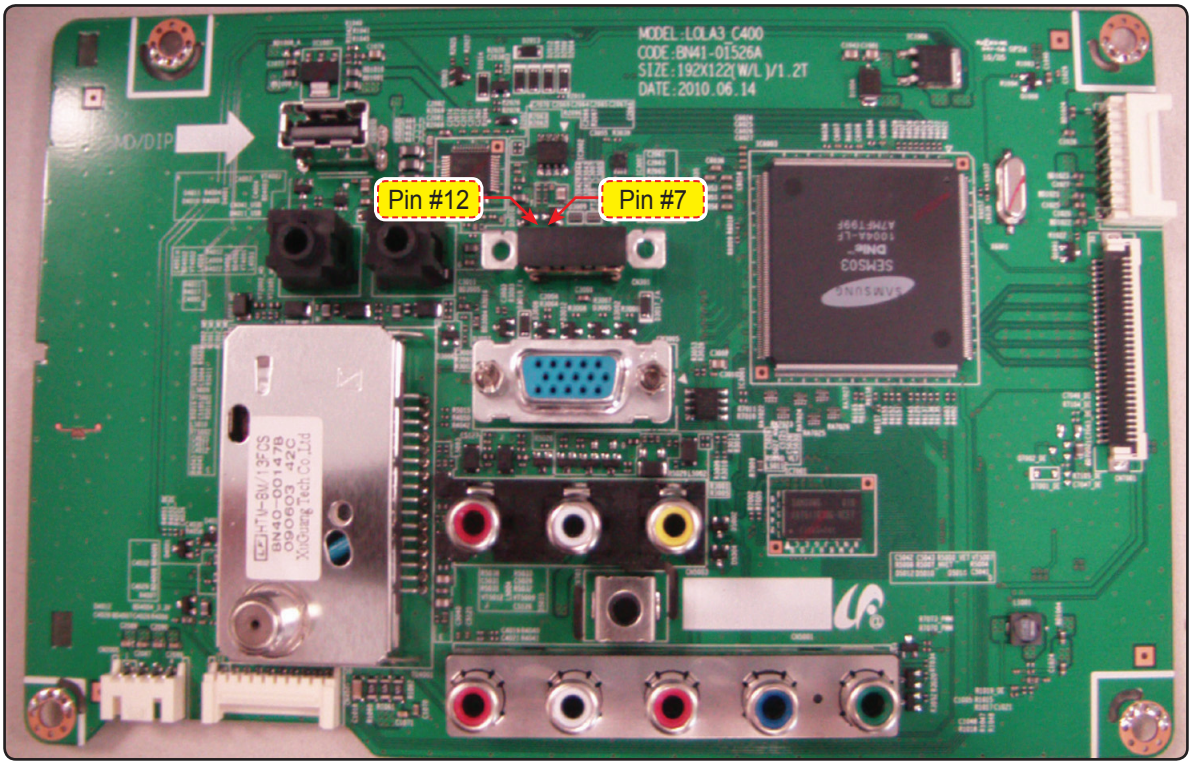
MODEL:LOLA3_C400
CODE:BN41-01526A
SIZE:192X122(W/L)/1.2T
DATE:2010.06.14
Pin #12
Pin #7

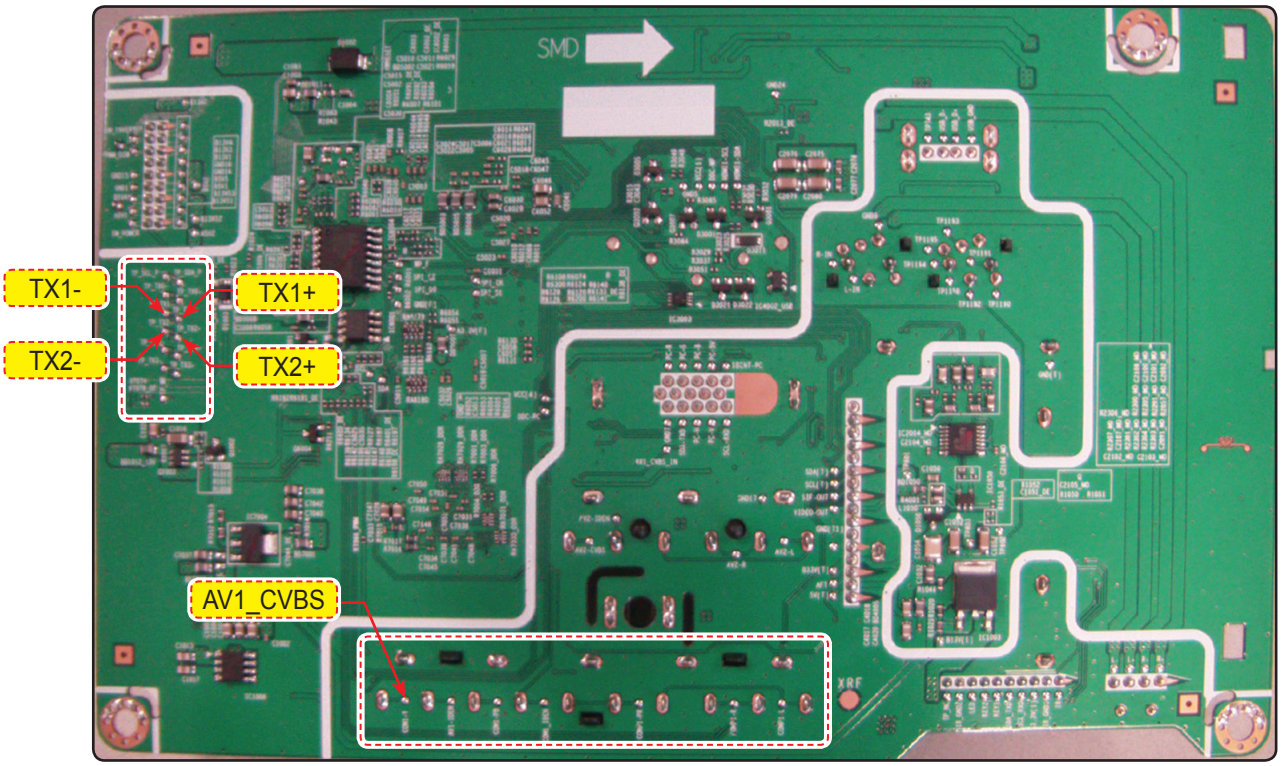
SMD
TX1-
TX1+
TX2-
TX2+
AV1_CVBS

■ WAVEFORMS

❷	Digital Output Data

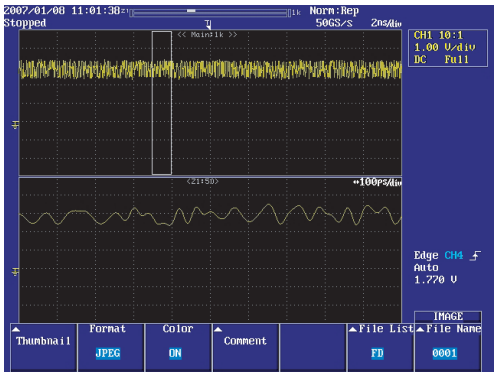

❸	Signal of HDMI(Data)

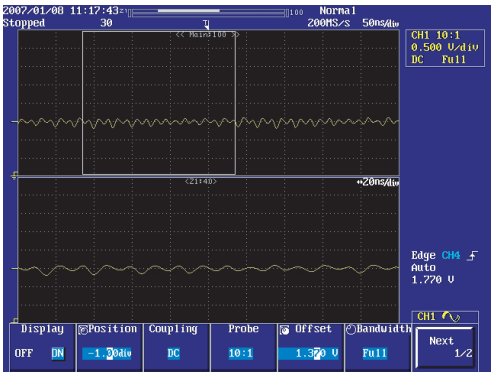

4-1-4. No Video (Tuner_CVBS)

Symptom	– Audio is normal but no picture is displayed on the screen.
Major checkpoints	– Check the Tuner CVBS source – Check the M-star – This may happen when the LVDS cable connecting the Main Board and the Panel is disconnected.
Diagnostics	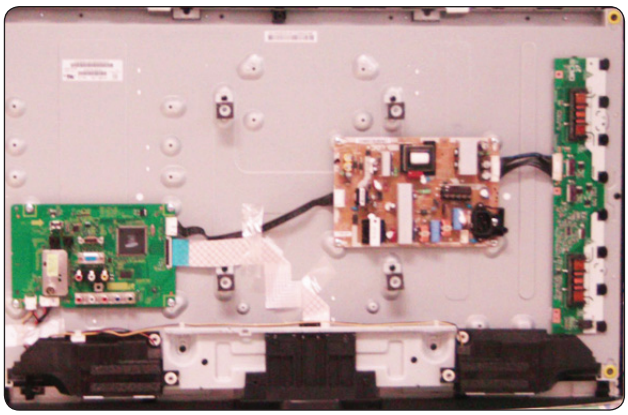 Power Indicator is off. Lamp on, no picure. → No → Connect the RF cable and check RF signal. ↓ Yes Does the signal appeat #8 of TU2400? → No → Check a B+ voltage (#2 of Tuner) 5V, change a main PCB ass'y. ↓ Yes Does the Signal appear at C4022 of IC4000? → No → Change a main PCB ass'y. ↓ Yes Check the LVDS cable? Replace the LCD panel? ↓ Yes Please, Call to Samsung Co. LTD.
Caution	Make sure to disconnect the power before working on the IP board.

Main Board

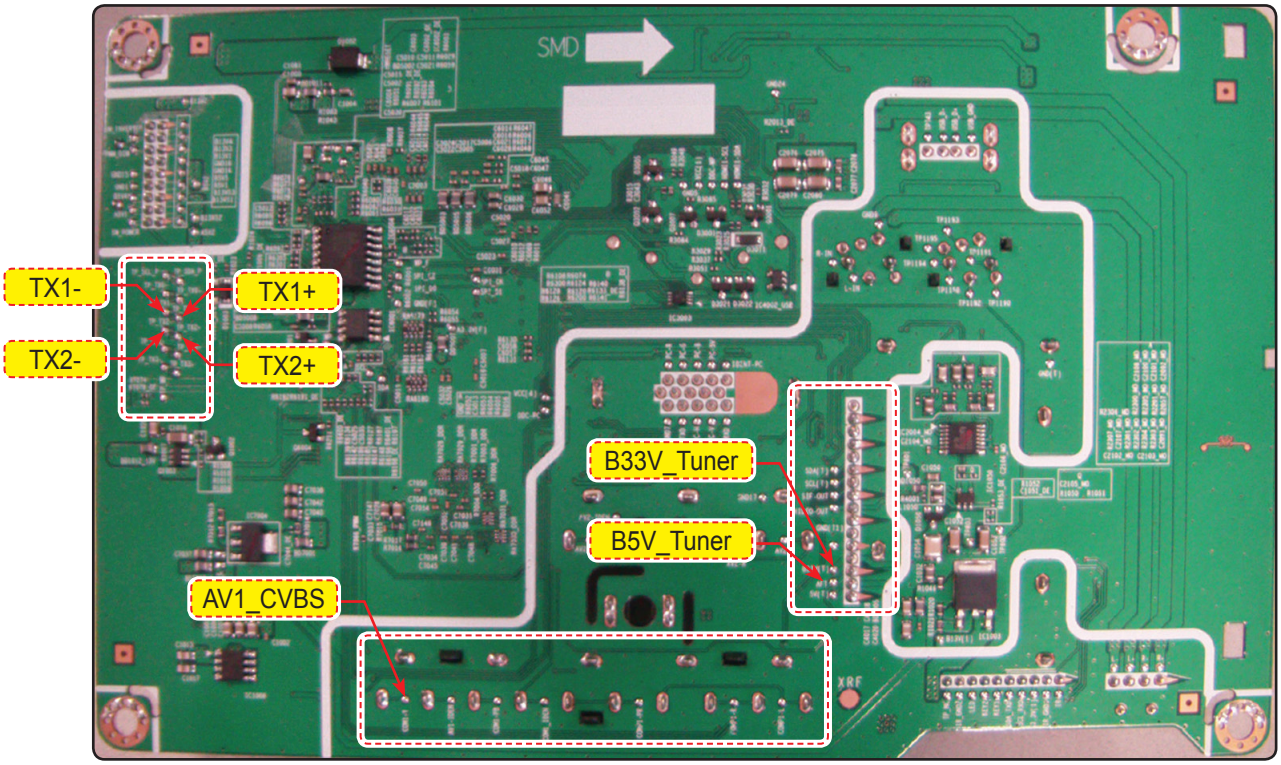

■ WAVEFORMS

❸	CVBS Output Signal

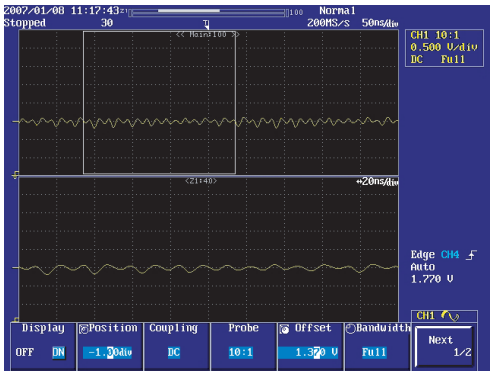

❹	Tuner_CVBS Output Signal

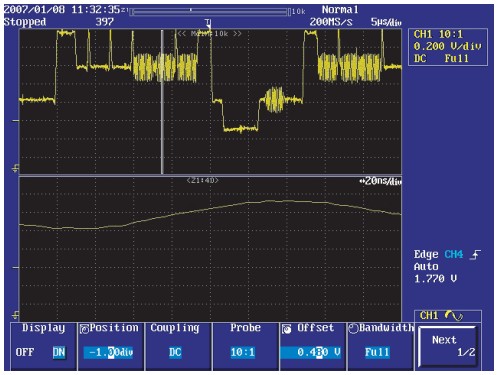

4-1-5. No Picture (Video_CVBS)

Symptom	– Audio is normal but no picture is displayed on the screen.
Major checkpoints	– Check the Video Source – Check the M-star – This may happen when the LVDS cable connecting the Main Board and the Panel is disconnected.
Diagnostics	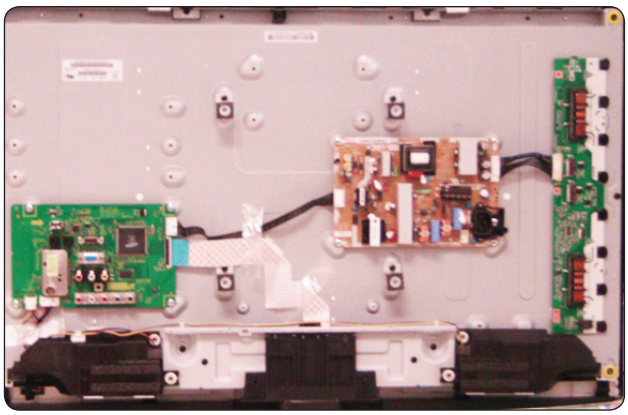 Power Indicator is off. Lamp on, no picture. → No → Check a A/V cable and video signal. ↓ Yes Does the signal appear at C4025 of IC4000? → No → Check a connection harness. ↓ Yes Check a LVDS cable ? Replcelcd panel? ↓ Yes Please, Call to Samsung Co. LTD.
Caution	Make sure to disconnect the power before working on the IP board.

Main Board

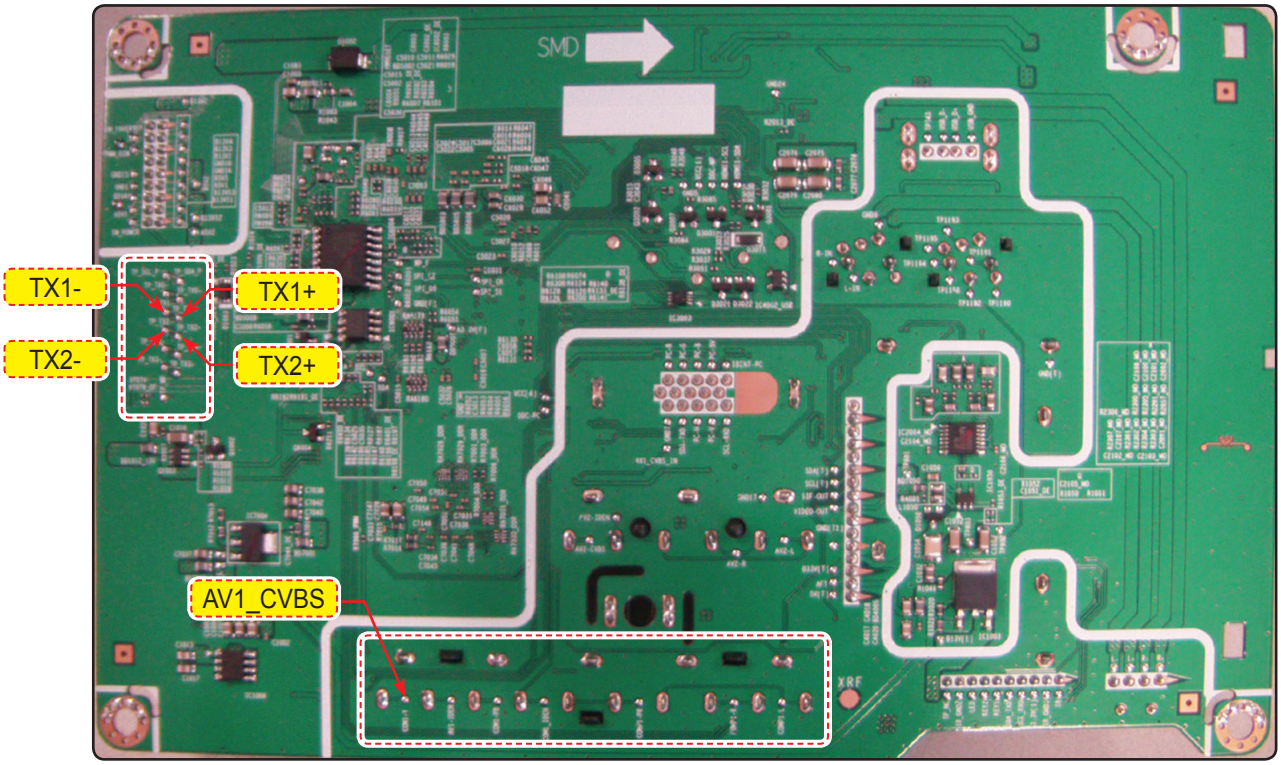

■ WAVEFORMS

❹	**CVBS Output Signal**

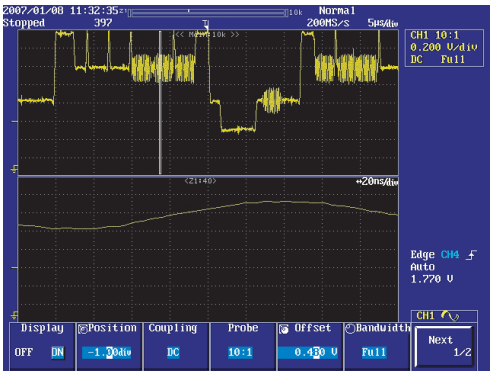

4-1-6. No Sound

Symptom	– Video is normal but there is no sound.
Major checkpoints	– When the speaker connectors are disconnected or damaged. – When the sound processing part of the Main Board is not functioning. – Speaker defect.
Diagnostics	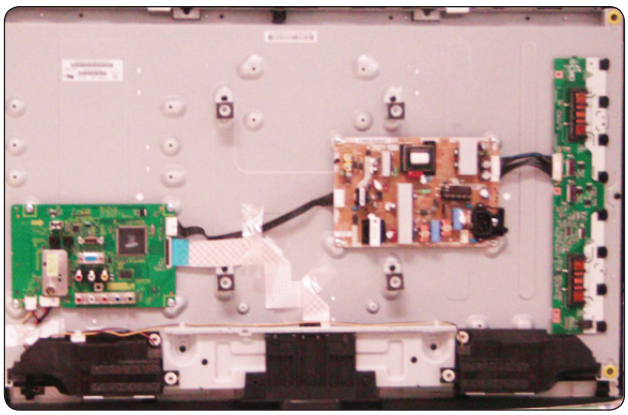
Caution	Make sure to disconnect the power before working on the IP board.

Check the source and check the connection of sound cable (Comp/PC/DVI to HDMI)?
- No → Input the sound source properly.
- Yes ↓

Does the sound data appear at R5032, R5031(AV2 R/L), R5036, R5037(AV1 R/L), R5017, R5018 (Comp1 R/L), R5009, R5010 ?
- No → Check JA5004/JA5005/JA5001/JA4001. Change the Main Assy. BN94-02709A
- Yes ↓

Does the DC B3.3VD, B13VS appear at R2013, BD1006?
- No → Change the Main Assy. BN94-02709A
- Yes ↓

Does the sound data appear at C2056, C2054 (R +/-) C2053, C2055 (L +/-)?
- No → Check IC6003 (SEMS03). Check IC2001 (Sound AMP). Change the Main Assy. BN94-02709A
- Yes ↓

Replace speaker?
- No → Please, Contact Tech support.

Main Board

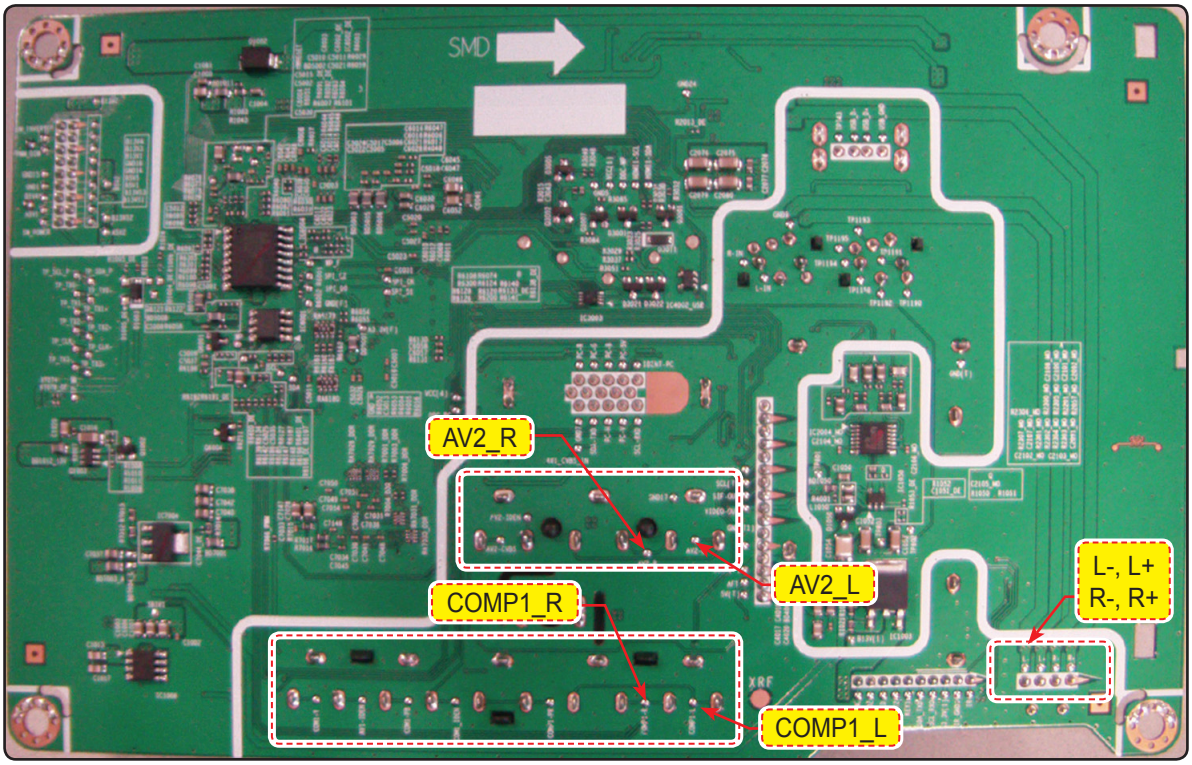

■ WAVEFORMS

❻	The Signal are Inputed to IC1201

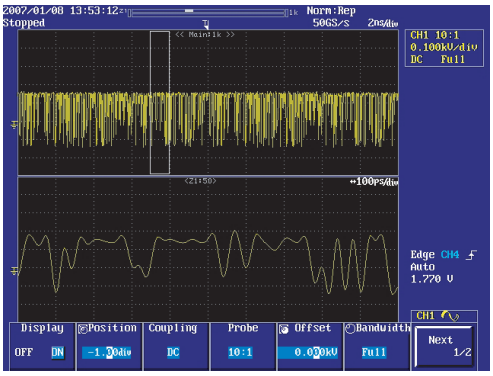

❼	The Signal are Inputed to IC1202

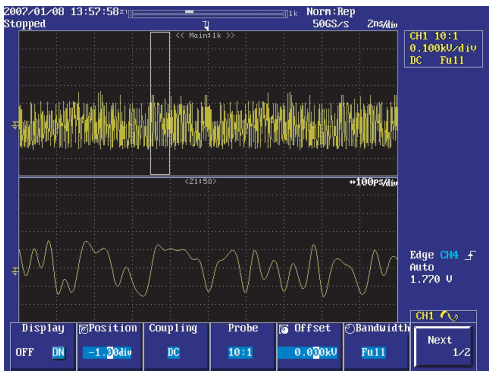

4-2. Alignments and Adjustments

4-2-1. General Alignment Instuction

1. Usually, a color LCD-TV needs only slight touch-up adjustment upon installation.
   Check the basic characteristics such as height, horizontal and vertical sync.
2. Use the specified test equipment or its equivalent.
3. Correct impedance matching is essential.
4. Avoid overload. Excessive signal from a sweep generator might overload the front-end of the TV. When inserting signal markers, do not allow the marker generator to distort test result.
5. Connect the TV only to an AC power source with voltage and frequency as specified on the backcover nameplate.
6. Do not attempt to connect or disconnect any wire while the TV is turned on. Make sure that the power cord is disconnected before replacing any parts.
7. To protect against shock hazard, use an isolation transformer.

4-3. Factory Mode Adjustments

4-3-1 Entering Factory Mode

To enter 'Service Mode' Press the remote -control keys in this sequence :

- If you do not have Factory remote - control

Asia : INFO → MENU → MUTE → Power on

South America : MENU → 1 → 8 → 2 → Power on

- If you have Factory remote - control

INFO → FACTORY

- The buttons are active in the service mode.

1. Remote - Control Key : Power, Arrow Up, Arrow Down, Arrow Left
   Arrow Right, Menu, Enter, Number Key(0~9)
2. Function - Control Key : Power, CH +, CH -, VOL +, VOL -,
   Menu, TV/VIDEO(Enter)

4-3-2 Panel Check

You have to check Panel Maker Because of different adjustments as follows.
First of all, Check the label rating!

1) Label Rating File
   - LCD PANEL MARK
     A:ACER(AUO) S : SEC C : CMO

* If not printed you could consider S(sec) panel mark.

4-3-3 Factory Data

■ Option

Option	Factory Reset		
	Type	22D_T,22I_T,22L_T,26D_AG, 26L_AG, 32L_AG, 32D_AG, 37L_AG, 40L_AG, 32A_AG_F, 32L_AG_F, 32D_AG_F, 32I_AG_F, 37L_AG_F, 37D_AG_F, 40A_AG_F, 40L_AG_F, 40D_AG_F, 46A_AG_F, 46L_AG_F, 46D_AG_F, 32A_AG_FF, 32L_AG_FF, 32D_AG_FF, 40A_AG_FF, 40L_AG_FF, 40D_AG_FF, 46A_AG_FF, 46D_AG_FF, 52A_AG_FF, 52L_AG_FF	
	Model	PB430, PB450, PB550_FBE, PB550, LB350, LB360, LB360_22, LB450, LB450_22, LB460, LB480, LB480_22, LB650, LB530, LB550, B550_FBE, LB550_FBE_NM	
	Tuner Select	SEMCO, XUGUANG	
	DDR	Samsung	
	Ch Table	SUWON, SESK, SEH, TTSEC, SEIN, SDMA, TSED, SAVINA, SIEL_C, SIEL_N, TSE	
	Local Set	Vietnam, China, India, Iran, Israel, Middle Asia, East Asia, Africa	
	P&P Language	English, Thai, China, French, Arabic, Persia, Hebrew, Russian	
	PDP Group	P43A_42SN, P43A_50SN, P45A_42SP, P45A_50SP, P55A_50SP	

■ ADC/WB

ADC	AV Calibration	Success/Failure	
	Comp Calibration	Success/Failure	
	PC Calibration	Success/Failure	
	HDMI Calibration	Success/Failure	
ADC Target	1st_AV_Low	0 ~ 255	
	1st_AV_High	0 ~ 255	
	1st_AV_Delta	0 ~ 255	
	1st_Comp_Low	0 ~ 255	
	1st_Comp_High	0 ~ 255	
	1st_Comp_Delta	0 ~ 255	
	1st_PC_Low	0 ~ 255	
	1st_PC_High	0 ~ 255	
	1st_PC_Delta	0 ~ 255	
	2nd_Low	0 ~ 255	
	2nd_High	0 ~ 255	
	2nd_Delta	0 ~ 255	

ADC Result	1st_AV_Gain	0 ~ 255	
	1st_AV_Offset	0 ~ 255	
	1st_Comp_Gain	0 ~ 255	
	1st_Comp_Gain_Cb	0 ~ 255	
	1st_Comp_Gain_Cr	0 ~ 255	
	1st_Comp_Offset	0 ~ 255	
	1st_Comp_Offset_Cb	0 ~ 255	
	1st_Comp_Offset_Cr	0 ~ 255	
	1st_PC_R_Gain	0 ~ 255	
	1st_PC_G_Gain	0 ~ 255	
	1st_PC_B_Gain	0 ~ 255	
	1st_PC_R_Offset	0 ~ 255	
	1st_PC_G_Offset	0 ~ 255	
	1st_PC_B_Offset	0 ~ 255	
	2nd_R_Offset	0 ~ 255	
	2nd_G_Offset	0 ~ 255	
	2nd_B_Offset	0 ~ 255	
	2nd_R_Gain	0 ~ 255	
	2nd_G_Gain	0 ~ 255	
	2nd_B_Gain	0 ~ 255	
WB	Sub Brightness	0 ~ 255	
	Red Offset	0 ~ 255	
	Green Offset	0 ~ 255	
	Blue Offset	0 ~ 255	
	Sub Contrast	0 ~ 255	
	Red Gain	0 ~ 255	
	Green Gain	0 ~ 255	
	Blue Gain	0 ~ 255	

■ Control

EDID	EDID Protect	On/Off	
	EDID Type		
	EDID Write(0x4D,0)	P12_1024_768, P13_1024_768, P12_1366_768, P13_1366_768, P12_1920_1080, P13_1920_1080, L12_1366_768, L13_1366_768, L12_1920_1080, L13_1920_1080	

Sub Option	Video Mute Time	0~99	
	Inch	19, 22, 23, 26, 27, 32, 37, 40, 42, 46, 50, 52, 57	
	Dimm Type	EXT, INT, INT_NEG,EXT_POS, EXT_NEG	
	D.Gamma	Off, 0.85, 0.88, 0.90, 0.93, 0.95, 0.98, M1, M2, M3, M4	
	TTX	On/Off	
	TTX List	Flof/List	
	TTX Group	Lang OSD, W Europe, E Europe, Russia, Greek, Turkey, Arab, Farsi, ArabHbrw	
	High Devi	On/Off	
	Volume Curve	EA, INDIA	
	NT Conversion	On/Off	
	Unbalance	On/Off	
	Language Group	East Asia, Iran, Israel, Middle Asia	
	Anynet+	On/Off	
	Auto Power	On/Off	
	LNA Menu	On/Off	
	LVDS Format	DEFAULT, VESA, JEIDA	
	Carrier Mute	On/Off	
	HDMI EQ1	Off, Low, Middle, Strong	
	HDMI EQ2	Off, Low, Middle, Strong	
	HDMI EQ3	Off, Low, Middle, Strong	
	HDMI EQ4	Off, Low, Middle, Strong	
	WatchDog	On/Off	
	Bus Stop		
	Panel Auto Setting		
	HotPlug	On/Off	
	HotPlugCtrl	On/Off	
	HotPlugDelay	0~63	
	FM Radio RSSI	0~127	
	FM Radio SNR	0~127	
	H/W Auto Mute	On/Off	
	No Signal Mute Time	0 ~ 255	
	USB Upgrade	On/Off	

	Spread Spectrum	Spread Spectrum	On/Off
		Step 1	0~255
		Step 2	0~255
		Range 1	0~255
		Range 2	0~255
		FBE SSC	On/Off

PDP Option	PixelShift Test	On/Off	
	Logic Download	On/Off	
	Pattern Select		
	FRC Mode	100Hz/Repeat	
	FRC DBG MarkOn	0~31	
	FRC Bypass	On/Off	
	FRC MV Force	On/Off	
	MB SW	On/Off	
	MB Offset1	0~255	
	Ve Control	On/Off	
	DRC	On/Off	
	Logic USB D/L	On/Off	
	Panel Ver.		
	Panel Inch		
	Type		
	Panel Temp.		
	Logic Sw Ver.		
	Checksum		
	SAPC Timer		
	APC Speed		

Hotel Option	Hotel Mode	On/Off	
	Power On Channel	0~99	
	Power On Band		
	Power On Source	TV, AV1, AV2, Compon1, Component2, PC, HDMI1, HDMI2, HDMI3, HDMI4	
	Power On Volume	0 ~ 100	
	Min Volume	0 ~ 100	
	Max Volume	0 ~ 100	
	Local Key Lock	On/Off	
	Picture Menu Lock	On/Off	
	VideoMute Ch		
	VideoMuteChOnOff	On/Off	
	Music Mode AV1	On/Off	
	Music Mode AV2	On/Off	
	Music Mode PC	On/Off	
	Music Mode Comp1	On/Off	
	Music Mode Comp2	On/Off	
	Music Mode BLU	On/Off	
	Menu Display	On/Off	
	ActiveSource Select	On/Off	
	Power On Option	LAST OPT, STN-BY, Power On	
	Auto PC	On/Off	
	Energy Saving	Off, Low, Medium, High	
	Cloning: TV to USB		
	Cloning: USB to TV		
Shop Option	Shop Mode	On/Off	

Sound	Detection Threshold	M2S Thr High	0~255
		M2S Thr Low	0~255
		S2M Thr High	0~255
		S2M Thr Low	0~255
		Amp On Thr High	0~255
		Amp On Thr Low	0~255
		Amp Off Thr High	0~255
		Amp Off Thr Low	0~255
		NSR On Thr High	0~255
		NSR On Thr Low	0~255
		NSR Off Thr High	0~255
		NSR Off Thr Low	0~255
		Amp On Thr High	0~255
		Amp On Thr Low	0~255
		Amp Off Thr High	0~255
		Amp Off Thr Low	0~255
		NSR On Thr High	0~255
		NSR On Thr Low	0~255
		NSR Off Thr High	0~255
		NSR Off Thr Low	0~255
	FM Prescale	0~40	
	AM Prescale	0~40	
	NICAM Prescale	0~40	
	FM M Prescale	0~40	
	SC1 Vol	0~40	
	SC2 Vol	0~40	
	Audio Delay Normal	0~255	
	Audio Delay Game	0~255	
	Num Of Check	0~60	
	Stereo Cnt	0~60	
	MP3 Level	0~60	
	Ext Volume Scale	0~100	
	R2E Scart2 Offset	0~40	
	NTP Master Volume	0~48	
	NTP PWM Modulation	0~255	
	NTP DRC Thresh1	0~127	
	NTP DRC Thresh2	0~127	
	NTP Speaker EQ	On/Off	

■ Advanced Menu

MST69A84HQ	VDEC		
		SYNC_LVL	0~255
		HPLL_MD	0~1
		HPLL_SPD1	0~63
		HPLL_SPD2	0~255
		CBCRLP_MD	0~3
		YC_DLY	0~3
		IFCOMP	0~63
		SAT_ADJ	0~255
		YSEPFLT	0~7
		NOISE_LVL	0~255
	IPC/MJC		
		Film Det Speed NT	0~255
		Film Det Speed PAL	0~255
		Motion Hist	0~7
		Motion History	0~7
	Color Space		
		Red Sat	0~30
		Red Hue	0~127
		Green Sat	0~30
		Green Hue	0~127
		Blue Sat	0~30
		Blue Hue	0~127
		Cyan Sat	0~30
		Cyan Hue	0~127
		Magenta Sat	0~30
		Magenta Hue	0~127
		Yellow Sat	0~30
		Yellow Hue	0~127
		FWC Blue	0~30
		FWC Red	0~30
	Pattern Select	Off, 16Gray, 32Gray, 64Gray, 256Gray, Color Bar, BW Line, BW Dot, Black, White, Red, Green, Blue	

FBE	Pattern Select	0~25	
	B-Slope Gain	0~255	
	B-Tilt Min	0~255	
	B-Tilt Max	0~255	
	LFuc-Basis	0~255	
	HFuc-Basis	0~255	
	Mean-Offset1	0~255	
	Mean-Offset2	0~255	
	Mean-Slope	0~255	
	ACR Offset	0~127	
	ACR Th1	0~255	
	ACR Th2	0~255	
	Skin Enable	0~255	
	Skin Uv	0~255	
	Mskin Uv	0~255	
	Sub Color	0~255	
	Msub Color	0~255	
WB Movie	WB Moive	On/Off	
	Color Mode	Dynamic, Standard, Movie	
	Color Tone	Cool, Normal, Warm1, Warm2	
	Msub Brigh	0~255	
	Msub Contr	0~255	
	W1_RGAIN	0~255	
	W1_BGAIN	0~255	
	W1_ROFFS	0~255	
	W1_BOFFS	0~255	
	W2_RGAIN	0~255	
	W2_BGAIN	0~255	
	W2_ROFFS	0~255	
	W2_BOFFS	0~255	
	NO_RGAIN	0~255	
	NO_BGAIN	0~255	
	NO_ROFFS	0~255	
	NO_BOFFS	0~255	
	Movie_Contr	0~100	
	Movie_Brigh	0~100	
	Moive_Color	0~100	
	Moive_Sharp	0~100	
	Moive_Tint	0~100	
	Mv BkLight	0~10	
	M.Gamma	-5~5	
	M.S.Gamma	-3~3	

EPA Standard	Std Contr	0~100	
	Std Bright	0~100	
	Std Sharp	0~100	
	Std Color	0~100	
	Std Tint	0~100	
	Std Backlight	0~10	
Adjsut	Dynamic Dimming	On/Off	
	Dynamic CE		
		Dynamic CE	On/Off
		B Slope	On/Off
	LNA Plus	RF Db 0 Level	0~255
		RF Db 1 Level	0~255
		RF Db 2 Level	0~255
		RF Db 3 Level	0~255
	Megazine LNA	On/Off	
	UART Select	On/Off	
	Debug Mode	Normal, NONE, MSTAR, Run Time	
	BackEndMute	On/Off	
	Hp Detect	High/Low	
	?????(HDCP Write)	If you change Debug Mode MSTAR, you can write HDCP	
	PDP FRC	On/Off	
	Visual Test	On/Off	
	FWC	On/Off	
	Comp SOG	0~31	
YC Delay	PAL BG	0~3	
	PAL DK	0~3	
	PAL I	0~3	
	SECAM BG	0~7	
	SECAM DK	0~7	
	SECAM L	0~7	
	NTSC 358	0~3	
	NTSC 443	0~3	
	AV PAL	0~3	
	AV SECAM	0~7	
	AV NT358	0~3	
	AV NT443	0~3	
	AV PAL60	0~3	

Sharpness	H1 Gain	0~63	
	H2 Gain	0~63	
	H3Gain	0~63	
	H4 Gain	0~63	
	V1 Gain	0~63	
	V2 Gain	0~63	
	H Overshoot B1	0~255	
	H Overshoot B2	0~255	
	V Overshoot B5	0~255	
	V Overshoot B8	0~255	
	H Undershoot B1	0~255	
	H Undershoot B2	0~255	
	V Undershoot B5	0~255	
	V Undershoot B8	0~255	
	Coring TH2	0~15	
	Coring TH1	0~15	
PQ Others	7.5IRE NTSC	On/Off	
	7.5IRE OFFSET	0~25	
PE	Skin X	0~11	
	Skin Y	0~11	
	B Slope	0~255	
	DLC ML	0~255	
	DLC_MH	0~255	
	DLC_H	0~255	
	Skin_SAT	0~15	
	Skin_Hue	0~127	
	M_Skin_Hue		
	M_Skin_X	0~11	
	M_Skin_Y	0~11	
	Mid_color_level	0~255	
	M_Mid_color_level	0~255	
EEPROM Reset	EEPROM Reset	OK	
	NVR All Clear	On/Off	
Defect Log	LogList1		
	LogList2		
	LogList3		

4-4. White Balance - Calibration

4-4-1 White Balance -Calibration

1. Calibration → AV Calibration
Comp Calibration
PC Calibration
HDMI Calibration

4-4-2 Service Adjustment

You must perform Calibration in the Lattice Pattern before adjusting the White Balance.

■ Color Calibration

Adjust spec.
1. Source : HDMI
2. Setting Mode : 1280*720@60Hz
3. Pattern : Pattern #24 (Chess Pattern)

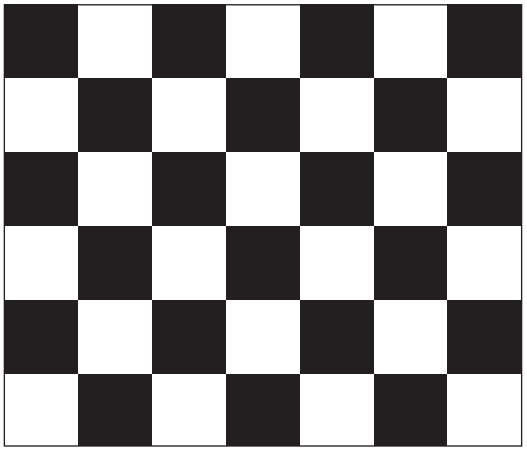

(Chess Pattern)

4. Use Equipment : CA210 & Master MSPG925 Generator

- Use other equipment only after comparing the result with that of the Master equipment.

Input mode	Calibration	Pattern
CVBS IN (Model_#1)	Perform in NTSC B&W Pattern #24	Lattice
Component IN (Model_#6)	Perform in 720p B&W Pattern #24	Lattice
PC Analog IN (Model_#21)	Perform in VESA XGA (1024x768) B&W Pattern #24	Lattice
HDMI IN	Perform in 720p B&W Pattern #24	Lattice

<Table 1>

■ Method of Color Calibration (AV)

1) Apply the NTSC Lattice (N0. 3) pattern signal to the AV IN 1 port
2) Press the Source key to switch to “AV1" mode
3) Enter Service mode
4) Select the “Calibration" menu
5) Select the “AV Calibration" menu.
6) In “AV Calibration Off" status, press the “►" key to perform Calibration.
7) When Calibration is complete, it returns to the high-level menu.
8) You can see the change of the “AV Calibration" status from Failure to Success.

■ Method of Color Calibration (Component)

1) Apply the 720p Lattice (N0. 6) pattern signal to the Component IN 1 port
2) Press the Source key to switch to “Component1" mode
3) Enter Service mode
4) Select the “Calibration" menu
5) Select the “Comp Calibration" menu.
6) In “Comp Calibration Off" status, press the “►" key to perform Calibration.
7) When Calibration is complete, it returns to the high-level menu.
8) You can see the change of the “Comp Calibration" status from Failure to Success.

■ Method of Color Calibration (PC)

1) Apply the VESA XGA Lattice (N0. 21) pattern signal to the PC IN port
2) Press the Source key to switch to “PC" mode
3) Enter Service mode
4) Select the “Calibration" menu
5) Select the “PC Calibration" menu.
6) In “PC Calibration Off" status, press the “►" key to perform Calibration.
7) When Calibration is complete, it returns to the high-level menu.
8) You can see the change of the “PC Calibration" status from Failure to Success.

■ Method of Color Calibration (HDMI)

1) Apply the 720p Lattice (N0. 6) pattern signal to the HDMI1/DVI IN port
2) Press the Source key to switch to “HDMI1" mode
3) Enter Service mode
4) Select the “Calibration" menu
5) Select the “HDMI Calibration" menu.
6) In “HDMI Calibration Off" status, press the “►" key to perform Calibration.
7) When Calibration is complete, it returns to the high-level menu.
8) You can see the change of the “HDMI Calibration" status from Failure to Success.

4-4-3 White Balance - Adjustment

		(low light)	(hight light)
5. W/B	→	Sub Bright	Sub Contrast
		R offset	R gain
		G offset	G gain
		B offset	B gain

(W/B adjustment Condition refer next page)

4-5. How To Upgrade

4-5-1 Software Upgrade (MSTAR ISP Tool)

MSTAR ISP TOOL

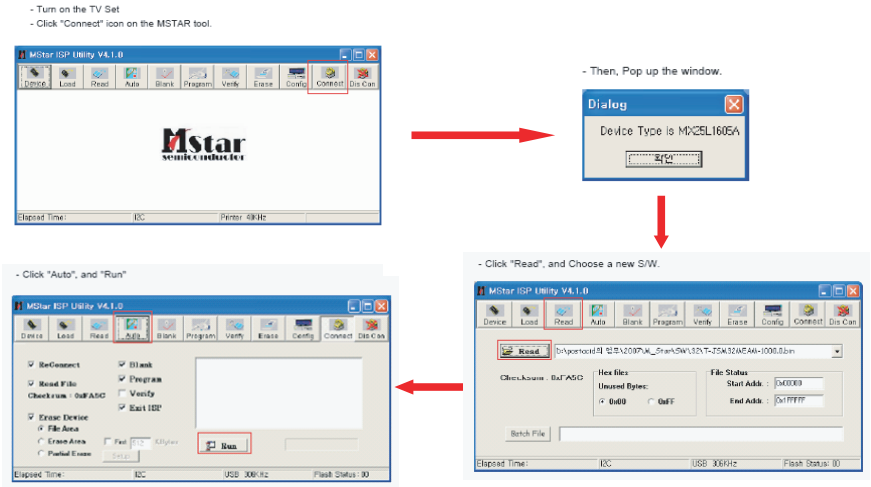

4-6. Servicing Information

4-6-1 USB Download Method

Samsung may offer upgrades for TV's firmware in the future. Please contact the Samsung call center to receive information about downloading upgrades and using a USB drive. Upgrades will be possible by connecting a USB drive to the USB port located on your TV.

1. Insert a USB drive containing the firmware upgrade into the USB port on the rear of the TV.
2. Enter the factory mode.
   Go to Control → Sub Option, then change "USB Upgrade" from Off to On.
3. Pull out power cord from the Set and re-insert.
4. Power indicator LED Light on.
   And in just a few seconds, The light twinkle faster as time went on.
5. The SET is automatically ON.
   You can watch updated software version that you enter the factory mode.

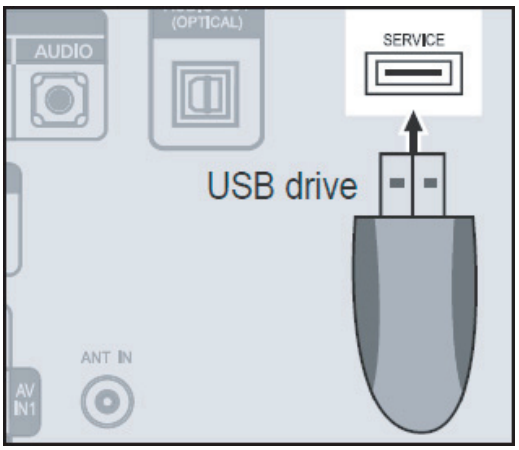

Please be careful to not disconnect the power or remove the USB drive while upgrades are being applied. The TV will turn off and turn on automatically after completing the firmware upgrade. Please check the firmware version after the upgrades are complete. When software is upgraded, video and audio settings you have made will return to their default (factory) settings.
We recommend you write down your settings so that you can easily reset them after the upgrade.